Parcel Number: 2410-01-1101 Jurisdiction: GREENWOOD TWP County: WEXFORD Printed on 02/15/2024

Grantor	Grantee	Sale Price	Sale Date	Inst. Type	Terms of Sale	Liber & Page	Verified By	Prcnt. Trans.

Property Address	Class: AGRICULTURAL-VACAN	Zoning:	Building Permit(s)	Date	Number	Status
	School: KINGSLEY AREA SCHOOL					
	P.R.E. 0%					
Owner's Name/Address	:					
STATE OF MICHIGAN P O BOX 30735 GRANTS ADMINISTRATION LANSING MI 48909-8235	2024 Est TCV 0 TCV/TFA: 0.00					

X Improved | | Vacant

Land Value Estimates for Land Table 4010.LAND VALUES

Description	Frontage	Depth	* Factors * Front	Depth	Rate	%Adj.	Reason	Value
ACREAGE			261.090 Acres		2,480	100		647,503
			261.09 Total Acres		Total Est. Land Value =			647,503

Tax Description

FRL NE 1/4 & FRL E 1/2 OF FRL NW 1/4
261.09 A. GW. SEC. 1 T24N R10W -KINGSLEY-

Comments/Influences

Public Improvements

- Dirt Road
- Gravel Road
- Paved Road
- Storm Sewer
- Sidewalk
- Water
- Sewer
- Electric
- Gas
- Curb
- Street Lights
- Standard Utilities
- Underground Utils.

Topography of Site

- Level
- Rolling
- Low
- High
- Landscaped
- Swamp
- Wooded
- Pond
- Waterfront
- Ravine
- Wetland
- Flood Plain

Who	When	What
GLA	10/31/2022	INSPECTION
GLA	06/09/2015	INSPECTION

Year	Land Value	Building Value	Assessed Value	Board of Review	Tribunal/ Other	Taxable Value
2024	EXEMPT	EXEMPT	EXEMPT			EXEMPT
2023	EXEMPT	EXEMPT	EXEMPT			EXEMPT
2022	0	0	0			0
2021	0	0	0			0

The Equalizer. Copyright (c) 1999 - 2009.
Licensed To: Township of Greenwood, County of Wexford, Michigan

*** Information herein deemed reliable but not guaranteed***

Building Type

X	Single Family
	Mobile Home
	Town Home
	Duplex
	A-Frame
X	Wood Frame

Building Style: PLAIN

Yr Built	Remodeled
0	0

Condition: Good

Room List

	Basement
	1st Floor
	2nd Floor
	Bedrooms

(1) Exterior

X	Wood/Shingle
	Aluminum/Vinyl
	Brick
X	Insulation

(2) Windows

X	Many		Large
	Avg.	X	Avg.
	Few		Small

	Wood Sash
	Metal Sash
X	Vinyl Sash
	Double Hung
	Horiz. Slide
	Casement
	Double Glass
	Patio Doors
X	Storms & Screens

(3) Roof

X	Gable		Gambrel
	Hip		Mansard
	Flat		Shed
X	Asphalt Shingle		

Chimney:

(3) Roof (cont.)

	Eavestrough
X	Insulation
0	Front Overhang
0	Other Overhang

(4) Interior

X	Drywall		Plaster
	Paneled		Wood T&G

Trim & Decoration

	Ex	X	Ord		Min

Size of Closets

	Lg	X	Ord		Small

Doors:		Solid	X	H.C.	

(5) Floors

Kitchen:
Other: Linoleum
Other: Carpeted

(6) Ceilings

X	Drywall		

(7) Excavation

Basement: 0 S.F.
Crawl: 0 S.F.
Slab: 0 S.F.
Height to Joists: 0.0

(8) Basement

	Conc. Block
	Poured Conc.
	Stone
	Treated Wood
	Concrete Floor

(9) Basement Finish

	Recreation SF
	Living SF
	Walkout Doors (B)
	No Floor SF
	Walkout Doors (A)

(10) Floor Support

Joists:
Unsupported Len:
Cntr.Sup:

(11) Heating/Cooling

X	Gas		Oil		Elec.
	Wood		Coal		Steam

	Forced Air w/o Ducts
X	Forced Air w/ Ducts
	Forced Hot Water
	Electric Baseboard
	Elec. Ceil. Radiant
	Radiant (in-floor)
	Electric Wall Heat
	Space Heater
	Wall/Floor Furnace
	Forced Heat & Cool
	Heat Pump
	No Heating/Cooling
	Central Air
	Wood Furnace

(12) Electric

150 Amps Service

No./Qual. of Fixtures

	Ex.	X	Ord.		Min

No. of Elec. Outlets

	Many	X	Ave.		Few

(13) Plumbing

1	Average Fixture(s)
	3 Fixture Bath
	2 Fixture Bath
	Softener, Auto
	Softener, Manual
	Solar Water Heat
	No Plumbing
	Extra Toilet
	Extra Sink
	Separate Shower
	Ceramic Tile Floor
	Ceramic Tile Wains
	Ceramic Tub Alcove
	Vent Fan

(14) Water/Sewer

	Public Water
	Public Sewer
	Water Well
	1000 Gal Septic
	2000 Gal Septic

Lump Sum Items:

(15) Built-ins

	Appliance Allow.
	Cook Top
	Dishwasher
	Garbage Disposal
	Bath Heater
	Vent Fan
	Hot Tub
	Unvented Hood
	Vented Hood
	Intercom
	Jacuzzi Tub
	Jacuzzi repl.Tub
	Oven
	Microwave
	Standard Range
	Self Clean Range
	Sauna
	Trash Compactor
	Central Vacuum
	Security System

(15) Fireplaces

	Interior 1 Story
	Interior 2 Story
	2nd/Same Stack
	Two Sided
	Exterior 1 Story
	Exterior 2 Story
	Prefab 1 Story
	Prefab 2 Story
	Heat Circulator
	Raised Hearth
	Wood Stove
	Direct-Vented Gas

Class: CD
Effec. Age: 20
Floor Area: 0
Total Base New : 0 E.C.F.
Total Depr Cost: 0 X 1.297
Estimated T.C.V: 0

(16) Porches/Decks

Area	Type

(17) Garage

Year Built:
Car Capacity:
Class:
Exterior:
Brick Ven.:
Stone Ven.:
Common Wall:
Foundation:
Finished ?:
Auto. Doors:
Mech. Doors:
Area:
% Good:
Storage Area:
No Conc. Floor:

Bsmnt Garage:

Carport Area:
Roof:

Cost Est. for Res. Bldg: 1 Single Family PLAIN Cls CD Blt 0
(11) Heating System: Forced Air w/ Ducts
Ground Area = 0 SF Floor Area = 0 SF.
Phy/Ab.Phy/Func/Econ/Comb. % Good=80/100/100/100/80
Building Areas

Stories	Exterior	Foundation	Size	Cost New	Depr. Cost
Other Additions/Adjustments					
			Totals:	0	0

Notes:

ECF (RESIDENTIAL) 1.297 => TCV: 0

*** Information herein deemed reliable but not guaranteed***

Parcel Number: 2410-01-2201 Jurisdiction: GREENWOOD TWP County: WEXFORD Printed on 02/15/2024

Grantor	Grantee	Sale Price	Sale Date	Inst. Type	Terms of Sale	Liber & Page	Verified By	Prcnt. Trans.

Property Address	Class: AGRICULTURAL-VACAN	Zoning:	Building Permit(s)	Date	Number	Status
	School: KINGSLEY AREA SCHOOL					
Owner's Name/Address	P.R.E. 0%					
	:					
STATE OF MICHIGAN P O BOX 30735 GRANTS ADMINISTRATION LANSING MI 48909-8235	2024 Est TCV 0					

Tax Description

FRL W 1/2 OF FRL NW 1/4 86.27 A. GW. SEC. 1 T24N R10W -KINGSLEY-

Comments/Influences

	Improved	X	Vacant

Public Improvements

- Dirt Road
- Gravel Road
- Paved Road
- Storm Sewer
- Sidewalk
- Water
- Sewer
- Electric
- Gas
- Curb
- Street Lights
- Standard Utilities
- Underground Utils.

Topography of Site

- Level
- Rolling
- Low
- High
- Landscaped
- Swamp
- Wooded
- Pond
- Waterfront
- Ravine
- Wetland
- Flood Plain

Who	When	What
GLA	10/31/2022	INSPECTION
GLA	06/09/2015	INSPECTION

Land Value Estimates for Land Table 4010.LAND VALUES

Description	Frontage	Depth	* Factors * Front	Depth	Rate	%Adj.	Reason	Value
ACREAGE			86.270 Acres		2,519	100		217,272
			86.27 Total Acres		Total Est. Land Value =			217,272

Year	Land Value	Building Value	Assessed Value	Board of Review	Tribunal/ Other	Taxable Value
2024	EXEMPT	EXEMPT	EXEMPT			EXEMPT
2023	EXEMPT	EXEMPT	EXEMPT			EXEMPT
2022	0	0	0			0
2021	0	0	0			0

The Equalizer. Copyright (c) 1999 - 2009. Licensed To: Township of Greenwood, County of Wexford, Michigan

*** Information herein deemed reliable but not guaranteed***

Parcel Number: 2410-01-3101 Jurisdiction: GREENWOOD TWP County: WEXFORD Printed on 02/15/2024

Grantor	Grantee	Sale Price	Sale Date	Inst. Type	Terms of Sale	Liber & Page	Verified By	Prcnt. Trans.

Property Address	Class: AGRICULTURAL-VACAN	Zoning:	Building Permit(s)	Date	Number	Status
	School: KINGSLEY AREA SCHOOL					
Owner's Name/Address	P.R.E. 100% / /					
MICHIGAN DEPT OF P O BOX 30735 GRANTS ADMINISTRATION LANSING MI 48909-8235	:					
	2024 Est TCV 793,600					

Tax Description

S 1/2 OF SECTION 320 A. GW. SEC. 1 T24N R10W -KINGSLEY- SEE ACT 513 ROLL FOR VALUE

Comments/Influences

	Improved	X	Vacant

Public Improvements

	Dirt Road
	Gravel Road
	Paved Road
	Storm Sewer
	Sidewalk
	Water
	Sewer
	Electric
	Gas
	Curb
	Street Lights
	Standard Utilities
	Underground Utils.

Topography of Site

	Level
	Rolling
	Low
	High
	Landscaped
	Swamp
	Wooded
	Pond
	Waterfront
	Ravine
	Wetland
	Flood Plain

Who	When	What
GLA	06/09/2015	INSPECTION

Land Value Estimates for Land Table 4010.LAND VALUES

Description	Frontage	Depth	* Factors * Front	Depth	Rate	%Adj.	Reason	Value
ACREAGE			320.000 Acres		2,480	100		793,600
			320.00 Total Acres		Total Est. Land Value =			793,600

Year	Land Value	Building Value	Assessed Value	Board of Review	Tribunal/ Other	Taxable Value
2024	396,800	0	396,800			153,809C
2023	304,000	0	304,000			146,485C
2022	272,000	0	272,000			139,510C
2021	240,000	0	240,000			135,054C

The Equalizer. Copyright (c) 1999 - 2009. Licensed To: Township of Greenwood, County of Wexford, Michigan

*** Information herein deemed reliable but not guaranteed***

Parcel Number: 2410-02-1101 Jurisdiction: GREENWOOD TWP County: WEXFORD Printed on 02/15/2024

Grantor	Grantee	Sale Price	Sale Date	Inst. Type	Terms of Sale	Liber & Page	Verified By	Prcnt. Trans.

Property Address	Class: AGRICULTURAL-VACAN	Zoning:	Building Permit(s)	Date	Number	Status
	School: KINGSLEY AREA SCHOOL					
Owner's Name/Address	P.R.E. 0%					
	:					
STATE OF MICHIGAN P O BOX 30735 GRANTS ADMINISTRATION LANSING MI 48909-8235	2024 Est TCV 0					

Improved | X | Vacant

Land Value Estimates for Land Table 4010.LAND VALUES

Description	Frontage	Depth	* Factors * Front	Depth	Rate	%Adj.	Reason	Value
ACREAGE			172.530 Acres		2,480	100		427,874
			172.53 Total Acres		Total Est. Land Value =			427,874

Tax Description

FRL NE 1/4 172.53 A. M/L GW. SEC. 2 T24N R10W -KINGSLEY-

Comments/Influences

Public Improvements

Dirt Road
Gravel Road
Paved Road
Storm Sewer
Sidewalk
Water
Sewer
Electric
Gas
Curb
Street Lights
Standard Utilities
Underground Utils.

Topography of Site

Level
Rolling
Low
High
Landscaped
Swamp
Wooded
Pond
Waterfront
Ravine
Wetland
Flood Plain

Year	Land Value	Building Value	Assessed Value	Board of Review	Tribunal/ Other	Taxable Value
2024	EXEMPT	EXEMPT	EXEMPT			EXEMPT
2023	EXEMPT	EXEMPT	EXEMPT			EXEMPT
2022	0	0	0			0
2021	0	0	0			0

Who	When	What
GLA	10/31/2022	INSPECTION
GLA	08/16/2015	INSPECTION

The Equalizer. Copyright (c) 1999 - 2009. Licensed To: Township of Greenwood, County of Wexford, Michigan

*** Information herein deemed reliable but not guaranteed***

Parcel Number: 2410-02-2101 Jurisdiction: GREENWOOD TWP County: WEXFORD Printed on 02/15/2024

Grantor	Grantee	Sale Price	Sale Date	Inst. Type	Terms of Sale	Liber & Page	Verified By	Prcnt. Trans.

Property Address	Class: AGRICULTURAL-VACAN	Zoning:	Building Permit(s)	Date	Number	Status
	School: KINGSLEY AREA SCHOOL					
Owner's Name/Address	P.R.E. 100% / /					
MICHIGAN DEPT OF P O BOX 30735 GRANTS ADMINISTRATION LANSING MI 48909-8235	:					
	2024 Est TCV 1,220,929					

Tax Description

W 1/2 EXC THAT PART OF SW 1/4 LYING W OF THREAD OF MANISTEE RIVER & SE 1/4 492.31 A. GW. SEC. 2 T24N R10W -KINGSLEY- SEE ACT 513 ROLL FOR VALUE

Comments/Influences

	Improved	X	Vacant

	Public Improvements
	Dirt Road
	Gravel Road
	Paved Road
	Storm Sewer
	Sidewalk
	Water
	Sewer
	Electric
	Gas
	Curb
	Street Lights
	Standard Utilities
	Underground Utils.

	Topography of Site
	Level
	Rolling
	Low
	High
	Landscaped
	Swamp
	Wooded
	Pond
	Waterfront
	Ravine
	Wetland
	Flood Plain

Who	When	What
GLA	08/16/2015	INSPECTION

Land Value Estimates for Land Table 4010.LAND VALUES

Description	Frontage	Depth	* Factors * Front	Depth	Rate	%Adj.	Reason	Value
ACREAGE			492.310 Acres		2,480	100		1,220,929
			492.31 Total Acres		Total Est. Land Value =			1,220,929

Year	Land Value	Building Value	Assessed Value	Board of Review	Tribunal/ Other	Taxable Value
2024	610,500	0	610,500			235,150C
2023	467,700	0	467,700			223,953C
2022	418,500	0	418,500			213,289C
2021	369,200	0	369,200			206,476C

The Equalizer. Copyright (c) 1999 - 2009. Licensed To: Township of Greenwood, County of Wexford, Michigan

*** Information herein deemed reliable but not guaranteed***

Parcel Number: 2410-02-3101 Jurisdiction: GREENWOOD TWP County: WEXFORD Printed on 02/15/2024

Grantor	Grantee	Sale Price	Sale Date	Inst. Type	Terms of Sale	Liber & Page	Verified By	Prcnt. Trans.
OLDS, RICHARD R.	OLDS AARON P & OLDS JUSTIN	0	10/29/2023	QC	21-NOT USED/OTHER		DEED	0.0
OLDS, JAMES H & SHARON	OLDS, JAMES H	0	06/24/2019	QC	06-COURT JUDGEMENT	685/899	DEED	0.0

Property Address

Class: AGRICULTURAL-VACAN Zoning:

School: KINGSLEY AREA SCHOOL

P.R.E. 100% / / Qual. Ag.

:

2024 Est TCV 5,600

Building Permit(s)	Date	Number	Status

Owner's Name/Address

OLDS AARON P & OLDS JUSTIN T
SHERMAN SARAH E & ETAL
22447 N NOTTINGHAM DR
FRANKLIN MI 48025

	Improved	X	Vacant

Land Value Estimates for Land Table 1010.AG

Description	Frontage	Depth	* Factors * Front	Depth	Rate	%Adj.	Reason	Value
AG LAND	1 AC AND UNDER		0.70 Acres		8000	100		5,600
			0.70 Total Acres		Total Est. Land Value =			5,600

Tax Description

THAT PART OF SW 1/4 OF SW 1/4 LYING W'LY OF MANISTEE RIVER. .7 A M/L GW. SEC. 2 T24N R10W -KINGSLEY-

Comments/Influences

	Public Improvements
X	Dirt Road
	Gravel Road
	Paved Road
	Storm Sewer
	Sidewalk
	Water
	Sewer
X	Electric
	Gas
	Curb
	Street Lights
	Standard Utilities
	Underground Utils.

	Topography of Site
	Level
X	Rolling
	Low
	High
	Landscaped
X	Swamp
	Wooded
	Pond
X	Waterfront
	Ravine
	Wetland
	Flood Plain

Who	When	What
GLA	10/31/2022	INSPECTION
GLA	06/09/2015	INSPECTED

Year	Land Value	Building Value	Assessed Value	Board of Review	Tribunal/ Other	Taxable Value
2024	2,800	0	2,800			331C
2023	2,100	0	2,100			316C
2022	1,800	0	1,800			301C
2021	1,800	0	1,800			292C

The Equalizer. Copyright (c) 1999 - 2009. Licensed To: Township of Greenwood, County of Wexford, Michigan

*** Information herein deemed reliable but not guaranteed***

Parcel Number: 2410-03-1101 Jurisdiction: GREENWOOD TWP County: WEXFORD Printed on 02/15/2024

Grantor	Grantee	Sale Price	Sale Date	Inst. Type	Terms of Sale	Liber & Page	Verified By	Prcnt. Trans.
FINZEL, STEPHEN L & PEGGY	GRAHAM, KATHRINE J	172,500	11/28/2012	WD	03-ARM'S LENGTH	654/192	DEED	100.0

Property Address

3760 E COUNTY LINE RD

Owner's Name/Address

GRAHAM, KATHRINE J
3760 E COUNTY LINE RD
KINGSLEY MI 49649

Tax Description

FRL NE 1/4 OF FRL NE 1/4 46.94 A. GW.
SEC. 3 T24N R10W -KINGSLEY-

Comments/Influences

Class: RESIDENTIAL-IMPROV Zoning:

School: KINGSLEY AREA SCHOOL

P.R.E. 100% / /

:

2024 Est TCV 388,217 TCV/TFA: 234.15

Building Permit(s)	Date	Number	Status
RESIDENTIAL - REMODEL	09/19/2000	PB9964	
RESIDENTIAL - NEW	09/19/2000	PE13269	

X Improved | Vacant

	Public Improvements
	Dirt Road
X	Gravel Road
	Paved Road
	Storm Sewer
	Sidewalk
	Water
	Sewer
X	Electric
	Gas
	Curb
	Street Lights
	Standard Utilities
	Underground Utils.

	Topography of Site
	Level
X	Rolling
	Low
X	High
	Landscaped
	Swamp
X	Wooded
	Pond
	Waterfront
	Ravine
	Wetland
	Flood Plain

Who	When	What
GLA	10/31/2022	INSPECTION
GLA	10/30/2023	INSPECTION
GLA	06/09/2015	APPR INSPE

Land Value Estimates for Land Table 4010.LAND VALUES

Description	Frontage	Depth	* Factors * Front	Depth	Rate	%Adj.	Reason	Value
ACREAGE			45.970 Acres		2,722	100		125,130
ROW			0.970 Acres		0	100		0
			46.94 Total Acres		Total Est. Land Value =			125,130

Land Improvement Cost Estimates

Description	Rate	Size	% Good	Cash Value
D/W/P: 4in Concrete	7.01	192	48	646
Wood Frame	27.69	132	71	2,595
Total Estimated Land Improvements True Cash Value =				3,241

Year	Land Value	Building Value	Assessed Value	Board of Review	Tribunal/ Other	Taxable Value
2024	62,600	131,500	194,100			107,058C
2023	62,000	107,600	169,600			101,960C
2022	40,700	90,900	131,600			97,105C
2021	39,100	91,900	131,000			94,003C

The Equalizer. Copyright (c) 1999 - 2009.
Licensed To: Township of Greenwood, County of Wexford, Michigan

*** Information herein deemed reliable but not guaranteed***

Building Type

X	Single Family
	Mobile Home
	Town Home
	Duplex
	A-Frame
X	Wood Frame

Building Style: RANCH

Yr Built	Remodeled
1994	0

Condition: Good

Room List

	Basement
	1st Floor
	2nd Floor
	Bedrooms

(1) Exterior

	Wood/Shingle
X	Aluminum/Vinyl
	Brick
X	Insulation

(2) Windows

X	Many		Large
	Avg.	X	Avg.
	Few		Small

	Wood Sash
	Metal Sash
X	Vinyl Sash
	Double Hung
	Horiz. Slide
	Casement
	Double Glass
	Patio Doors
X	Storms & Screens

(3) Roof

X	Gable		Gambrel
	Hip		Mansard
	Flat		Shed

X	Asphalt Shingle

Chimney:

(3) Roof (cont.)

	Eavestrough
X	Insulation
0	Front Overhang
0	Other Overhang

(4) Interior

X	Drywall		Plaster
	Paneled		Wood T&G

Trim & Decoration

	Ex	X	Ord		Min

Size of Closets

	Lg	X	Ord		Small

Doors:		Solid	X	H.C.	

(5) Floors

Kitchen:
Other: Linoleum
Other: Carpeted

(6) Ceilings

X	Drywall		

(7) Excavation

Basement: 1658 S.F.
Crawl: 0 S.F.
Slab: 0 S.F.
Height to Joists: 0.0

(8) Basement

	Conc. Block
	Poured Conc.
	Stone
	Treated Wood
	Concrete Floor

(9) Basement Finish

	Recreation SF
	Living SF
	Walkout Doors (B)
	No Floor SF
	Walkout Doors (A)

(10) Floor Support

Joists:
Unsupported Len:
Cntr.Sup:

(11) Heating/Cooling

X	Gas		Oil		Elec.
	Wood		Coal		Steam

	Forced Air w/o Ducts
X	Forced Air w/ Ducts
	Forced Hot Water
	Electric Baseboard
	Elec. Ceil. Radiant
	Radiant (in-floor)
	Electric Wall Heat
	Space Heater
	Wall/Floor Furnace
	Forced Heat & Cool
	Heat Pump
	No Heating/Cooling

	Central Air
	Wood Furnace

(12) Electric

200	Amps Service

No./Qual. of Fixtures

	Ex.	X	Ord.		Min

No. of Elec. Outlets

	Many	X	Ave.		Few

(13) Plumbing

	Average Fixture(s)
2	3 Fixture Bath
	2 Fixture Bath
	Softener, Auto
	Softener, Manual
	Solar Water Heat
	No Plumbing
	Extra Toilet
	Extra Sink
	Separate Shower
	Ceramic Tile Floor
	Ceramic Tile Wains
	Ceramic Tub Alcove
	Vent Fan

(14) Water/Sewer

	Public Water
	Public Sewer
1	Water Well
1	1000 Gal Septic
	2000 Gal Septic

Lump Sum Items:

(15) Built-ins

	Appliance Allow.
	Cook Top
	Dishwasher
	Garbage Disposal
	Bath Heater
	Vent Fan
	Hot Tub
	Unvented Hood
	Vented Hood
	Intercom
	Jacuzzi Tub
	Jacuzzi repl.Tub
	Oven
	Microwave
	Standard Range
	Self Clean Range
	Sauna
	Trash Compactor
	Central Vacuum
	Security System

(15) Fireplaces

	Interior 1 Story
	Interior 2 Story
	2nd/Same Stack
	Two Sided
	Exterior 1 Story
	Exterior 2 Story
	Prefab 1 Story
	Prefab 2 Story
	Heat Circulator
	Raised Hearth
	Wood Stove
	Direct-Vented Gas

Class: C
Effec. Age: 29
Floor Area: 1,658
Total Base New : 282,177 E.C.F.
Total Depr Cost: 200,344 X 1.297
Estimated T.C.V: 259,846

(16) Porches/Decks

Area	Type
464	WPP
120	WCP (1 Story)

(17) Garage

Year Built:
Car Capacity:
Class: C
Exterior: Pole
Brick Ven.: 0
Stone Ven.: 0
Common Wall: Detache
Foundation: 18 Inch
Finished ?:
Auto. Doors: 0
Mech. Doors: 0
Area: 576
% Good: 0
Storage Area: 0
No Conc. Floor: 0

Bsmnt Garage:

Carport Area:
Roof:

Cost Est. for Res. Bldg: 1 Single Family RANCH Cls C Blt 1994
(11) Heating System: Forced Air w/ Ducts
Ground Area = 1658 SF Floor Area = 1658 SF.
Phy/Ab.Phy/Func/Econ/Comb. % Good=71/100/100/100/71
Building Areas

Stories	Exterior	Foundation	Size	Cost New	Depr. Cost
1 Story	Siding	Basement	1,658		
			Total:	236,517	167,926
Other Additions/Adjustments					
Plumbing					
3 Fixture Bath			1	4,678	3,321
Water/Sewer					
1000 Gal Septic			1	4,899	3,478
Water Well, 100 Feet			1	5,849	4,153
Porches					
WPP			464	7,842	5,568
WCP (1 Story)			120	5,561	3,948
Garages					
Class: C Exterior: Pole (Unfinished)					
Base Cost			576	16,831	11,950
			Totals:	282,177	200,344

Notes:

ECF (RESIDENTIAL) 1.297 => TCV: 259,846

*** Information herein deemed reliable but not guaranteed***

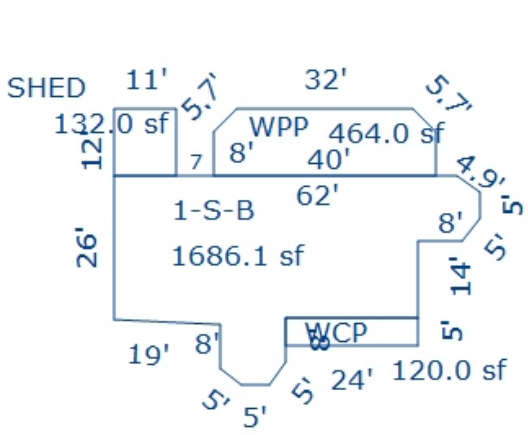

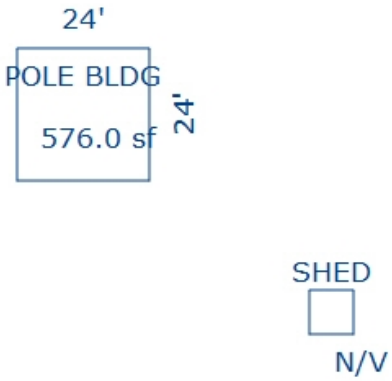

Sketch by Apex Sketch

*** Information herein deemed reliable but not guaranteed***

Parcel Number: 2410-03-1201 Jurisdiction: GREENWOOD TWP County: WEXFORD Printed on 02/15/2024

Grantor	Grantee	Sale Price	Sale Date	Inst. Type	Terms of Sale	Liber & Page	Verified By	Prcnt. Trans.
WOLFGRAM, LEO B	WOLFGRAM, BERNHART B	0	09/28/2016	QC	21-NOT USED/OTHER	6781/583	DEED	0.0
MIDDAUGH, MARLENE J.	WOLFGRAM ET AL, BENHART B.	35,000	11/18/1994	WD	03-ARM'S LENGTH	342:172	DEED	0.0

Property Address

3634 E COUNTY LINE RD

Owner's Name/Address

WOLFGRAM, BENHART B.
3634 E COUNTY LINE RD
KINGSLEY MI 49649

Class: RESIDENTIAL-IMPROV Zoning:

School: KINGSLEY AREA SCHOOL

P.R.E. 100% / /

:

2024 Est TCV 116,319 TCV/TFA: 79.45

Building Permit(s)	Date	Number	Status
RESIDENTIAL - NEW	07/20/2005	PE16994	

X Improved | Vacant

Public Improvements

	Dirt Road
X	Gravel Road
	Paved Road
	Storm Sewer
	Sidewalk
	Water
	Sewer
X	Electric
	Gas
	Curb
	Street Lights
	Standard Utilities
	Underground Utils.

Topography of Site

	Level
X	Rolling
X	Low
X	High
	Landscaped
X	Swamp
X	Wooded
	Pond
	Waterfront
	Ravine
	Wetland
	Flood Plain

Who When What

GLA 06/09/2015 INSPECTED

Tax Description

PAR A; COM AT N 1/4 COR OF SEC; E 654.74 FT TO POB: E 327.37 FT TO C/L OF EASMT; S 304.13 FT; W 327.64 FT; N 304.14 FT TO POB. --TOG W/ & SUB TO EASMT --2.29 A M/L-- GW. SEC. 3 T24N R10W -KINGSLEY-

Comments/Influences

Default Comments

Land Value Estimates for Land Table 4010.LAND VALUES

Description	Frontage	Depth	* Factors * Front	Depth	Rate	%Adj.	Reason	Value
HELSEL RIV LOW	304.00	328.00	1.0000	0.0000	315	100*		0
ACREAGE			2.039 Acres		5,546	100		11,308
ROW			0.250 Acres		0	100		0

* denotes lines that do not contribute to the total acreage calculation.

304 Actual Front Feet, 2.29 Total Acres Total Est. Land Value = 11,308

Land Improvement Cost Estimates

Description	Rate	Size	% Good	Cash Value
Wood Frame	18.79	308	18	1,042
Wood Frame	31.33	24	18	135
Total Estimated Land Improvements True Cash Value =				1,177

Year	Land Value	Building Value	Assessed Value	Board of Review	Tribunal/ Other	Taxable Value
2024	5,700	52,500	58,200			12,565C
2023	5,600	42,900	48,500			11,967C
2022	4,600	35,700	40,300			11,398C
2021	4,900	36,400	41,300			11,034C

The Equalizer. Copyright (c) 1999 - 2009. Licensed To: Township of Greenwood, County of Wexford, Michigan

*** Information herein deemed reliable but not guaranteed***

Building Type

X	Single Family
	Mobile Home
	Town Home
	Duplex
	A-Frame
X	Wood Frame

Building Style: LOG

Yr Built	Remodeled
0	0

Condition: Fair

Room List

	Basement
	1st Floor
	2nd Floor
	Bedrooms

(1) Exterior

	Wood/Shingle
	Aluminum/Vinyl
	Brick
X	Log
	Insulation

(2) Windows

X	Many Avg. Few	X	Large Avg. Small

X	Wood Sash
	Metal Sash
	Vinyl Sash
X	Double Hung
	Horiz. Slide
	Casement
	Double Glass
	Patio Doors
	Storms & Screens

(3) Roof

X	Gable		Gambrel
	Hip		Mansard
	Flat		Shed

X	Asphalt Shingle
	Metal

Chimney: Brick

(3) Roof (cont.)

	Eavestrough
	Insulation
0	Front Overhang
0	Other Overhang

(4) Interior

	Drywall		Plaster
	Paneled		Wood T&G

Trim & Decoration

	Ex		Ord		Min

Size of Closets

	Lg		Ord		Small

Doors:		Solid		H.C.	

(5) Floors

Kitchen: Linoleum
Other:
Other:

(6) Ceilings

X	Drywall

(7) Excavation

Basement: 0 S.F.
Crawl: 768 S.F.
Slab: 312 S.F.
Height to Joists: 0.0

(8) Basement

	Conc. Block
	Poured Conc.
	Stone
	Treated Wood
	Concrete Floor

(9) Basement Finish

	Recreation SF
	Living SF
	Walkout Doors (B)
	No Floor SF
	Walkout Doors (A)

(10) Floor Support

Joists:
Unsupported Len:
Cntr.Sup:

(11) Heating/Cooling

X	Gas		Oil		Elec.
	Wood		Coal		Steam

	Forced Air w/o Ducts
X	Forced Air w/ Ducts
	Forced Hot Water
	Electric Baseboard
	Elec. Ceil. Radiant
	Radiant (in-floor)
	Electric Wall Heat
	Space Heater
	Wall/Floor Furnace
	Forced Heat & Cool
	Heat Pump
	No Heating/Cooling

	Central Air
	Wood Furnace

(12) Electric

0	Amps Service

No./Qual. of Fixtures

	Ex.		Ord.		Min

No. of Elec. Outlets

	Many		Ave.		Few

(13) Plumbing

1	Average Fixture(s)
	3 Fixture Bath
	2 Fixture Bath
	Softener, Auto
	Softener, Manual
	Solar Water Heat
	No Plumbing
	Extra Toilet
	Extra Sink
	Separate Shower
	Ceramic Tile Floor
	Ceramic Tile Wains
	Ceramic Tub Alcove
	Vent Fan

(14) Water/Sewer

	Public Water
	Public Sewer
1	Water Well
1	1000 Gal Septic
	2000 Gal Septic

Lump Sum Items:

(15) Built-ins

	Appliance Allow.
	Cook Top
	Dishwasher
	Garbage Disposal
	Bath Heater
	Vent Fan
	Hot Tub
	Unvented Hood
	Vented Hood
	Intercom
	Jacuzzi Tub
	Jacuzzi repl.Tub
	Oven
	Microwave
	Standard Range
	Self Clean Range
	Sauna
	Trash Compactor
	Central Vacuum
	Security System

(15) Fireplaces

	Interior 1 Story
	Interior 2 Story
	2nd/Same Stack
	Two Sided
	Exterior 1 Story
	Exterior 2 Story
	Prefab 1 Story
	Prefab 2 Story
	Heat Circulator
	Raised Hearth
	Wood Stove
	Direct-Vented Gas

Class: D
Effec. Age: 67
Floor Area: 1,464
Total Base New : 162,197 E.C.F.
Total Depr Cost: 72,988 X 1.297
Estimated T.C.V: 94,665

(16) Porches/Decks

Area	Type
48	Treated Wood
70	Treated Wood
128	Treated Wood

(17) Garage

Year Built:
Car Capacity:
Class:
Exterior:
Brick Ven.:
Stone Ven.:
Common Wall:
Foundation:
Finished ?:
Auto. Doors:
Mech. Doors:
Area:
% Good:
Storage Area:
No Conc. Floor:

Bsmnt Garage:

Carport Area:
Roof:

Cost Est. for Res. Bldg: 1 Single Family LOG Cls D Blt 0
(11) Heating System: Forced Air w/ Ducts
Ground Area = 1080 SF Floor Area = 1464 SF.
Phy/Ab.Phy/Func/Econ/Comb. % Good=45/100/100/100/45

Building Areas

Stories	Exterior	Foundation	Size	Cost New	Depr. Cost
1.5 Story	Siding	Crawl Space	768		
1 Story	Siding	Slab	312		
			Total:	144,870	65,191

Other Additions/Adjustments

Water/Sewer			
1000 Gal Septic	1	4,293	1,932
Water Well, 100 Feet	1	5,545	2,495
Deck			
Treated Wood w/Roof (Deck Portion)	48	1,667	750
Treated Wood w/Roof (Roof portion)	48	808	364
Treated Wood	70	2,038	917
Treated Wood	128	2,976	1,339
	Totals:	162,197	72,988

Notes:

ECF (RESIDENTIAL) 1.297 => TCV: 94,665

*** Information herein deemed reliable but not guaranteed***

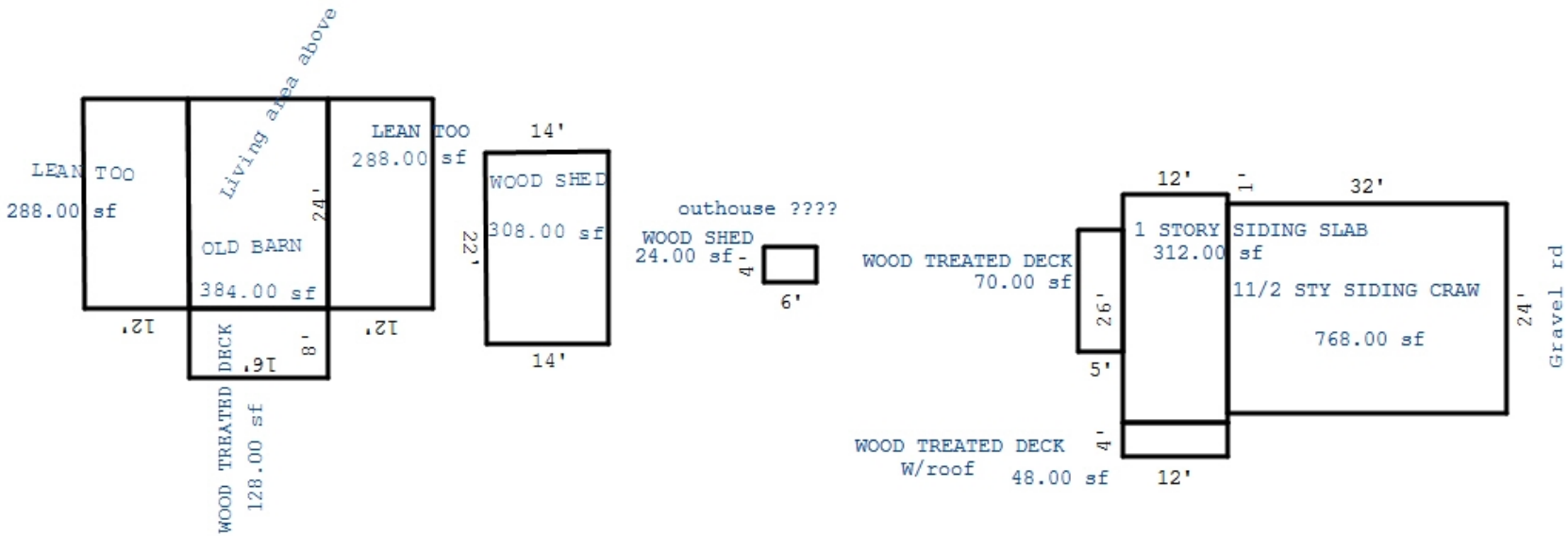

Sketch by Apex Sketch

*** Information herein deemed reliable but not guaranteed***

Building Type	Barn - General Purpose				
Year Built					
Class/Construction	D,Frame				
Quality/Exterior	Low Cost				
# of Walls, Perimeter	4 Wall, 112				
Height	10				
Heating System	No Heating/Cooling				
Length/Width/Area	24 x 40 = 960				
Cost New	$ 25,507				
Phy./Func./Econ. %Good	38/100/100 38.0				
Depreciated Cost	$ 9,693				
+ Unit-In-Place Items	$ 0				
Description, Size X Rate X %Good = Cost Itemized ->\ Unit-In-Place ->\ Items ->\					
E.C.F.	X 0.946				
% Good	38				
Est. True Cash Value	$ 9,169				
Comments:					
Total Estimated True Cash Value of Agricultural Improvements / This Card: 9169 / All Cards: 9169					

*** Information herein deemed reliable but not guaranteed***

Parcel Number: 2410-03-1202 Jurisdiction: GREENWOOD TWP County: WEXFORD Printed on 02/15/2024

Grantor	Grantee	Sale Price	Sale Date	Inst. Type	Terms of Sale	Liber & Page	Verified By	Prcnt. Trans.
O'BRIEN, JOHN	KRUGER, CECIL E.	14,000	02/02/1990	LC	03-ARM'S LENGTH	319:288	DEED	0.0

Property Address

Class: RESIDENTIAL-VACANT Zoning:

School: KINGSLEY AREA SCHOOL

P.R.E. 0%

:

2024 Est TCV 66,236

Building Permit(s)	Date	Number	Status

Owner's Name/Address

KRUGER, CAROLE E LE
ETAL
1955 E LAKE MITCHELL DR
CADILLAC MI 49601

Improved | X | Vacant

Land Value Estimates for Land Table 4010.LAND VALUES

Description	Frontage	Depth	* Factors * Front	Depth	Rate	%Adj.	Reason	Value
ACREAGE			22.760 Acres		2,910	100		66,236
ROW			0.500 Acres		0	100		0
			23.26 Total Acres		Total Est. Land Value =			66,236

Tax Description

W 1/2 OF NW 1/4 OF NE 1/4 --23.26 A M/L--
GW. SEC. 3 T24N T10W -KINGLSEY-

Comments/Influences

Public Improvements

	Dirt Road
X	Gravel Road
	Paved Road
	Storm Sewer
	Sidewalk
	Water
	Sewer
X	Electric
	Gas
	Curb
	Street Lights
	Standard Utilities
	Underground Utils.

Topography of Site

	Level
X	Rolling
	Low
	High
	Landscaped
	Swamp
	Wooded
	Pond
	Waterfront
	Ravine
	Wetland
	Flood Plain
X	OPEN/PINES

Who	When	What
GLA	08/16/2015	INSPECTION

Year	Land Value	Building Value	Assessed Value	Board of Review	Tribunal/ Other	Taxable Value
2024	33,100	0	33,100			11,383C
2023	28,900	0	28,900			10,841C
2022	25,000	0	25,000			10,325C
2021	22,800	0	22,800			9,996C

The Equalizer. Copyright (c) 1999 - 2009.
Licensed To: Township of Greenwood, County of Wexford, Michigan

*** Information herein deemed reliable but not guaranteed***

Parcel Number: 2410-03-1203 Jurisdiction: GREENWOOD TWP County: WEXFORD Printed on 02/15/2024

Grantor	Grantee	Sale Price	Sale Date	Inst. Type	Terms of Sale	Liber & Page	Verified By	Prcnt. Trans.
WOLFGRAM, LEO B	WOLFGRAM, BERNHART B	0	09/28/2016	QC	21-NOT USED/OTHER	6781/583	DEED	0.0

Property Address

Owner's Name/Address

WOLFGRAM, BENHART B.
3634 E COUNTY LINE RD
KINGSLEY MI 49649

Tax Description

PAR B; COM AT N 1/4 COR OF SEC; E 982.11 FT TO C/L OF EASMT & POB: E 327.37 FT; S 304.13 FT; W 327.65 FT; N 304.13 FT TO POB. TOG W/ & SUB TO EASMT --2.29 A M/L-- GW SEC 3 T24N R10W -KINGSLEY- [[ASSESSED W/ 03-1201 '00

Comments/Influences

Class: RESIDENTIAL-VACANT Zoning:

School: KINGSLEY AREA SCHOOL

P.R.E. 100% / /

:

2024 Est TCV 11,369

Building Permit(s)	Date	Number	Status

	Improved	X	Vacant

	Public Improvements
X	Dirt Road
X	Gravel Road
	Paved Road
	Storm Sewer
	Sidewalk
	Water
	Sewer
X	Electric
	Gas
	Curb
	Street Lights
	Standard Utilities
	Underground Utils.

	Topography of Site
	Level
X	Rolling
	Low
	High
	Landscaped
	Swamp
X	Wooded
	Pond
	Waterfront
	Ravine
	Wetland
	Flood Plain
X	OPEN

Who	When	What
GLA	10/31/2022	INSPECTION
GLA	06/09/2015	INSPECTION

Land Value Estimates for Land Table 4010.LAND VALUES

Description	Frontage	Depth	* Factors * Front	Depth	Rate	%Adj.	Reason	Value
ACREAGE			2.050 Acres		5,546	100		11,369
ROW			0.240 Acres		0	100		0
			2.29 Total Acres		Total Est. Land Value =			11,369

Year	Land Value	Building Value	Assessed Value	Board of Review	Tribunal/ Other	Taxable Value
2024	5,700	0	5,700			1,331C
2023	5,600	0	5,600			1,268C
2022	4,600	0	4,600			1,208C
2021	4,900	0	4,900			1,170C

The Equalizer. Copyright (c) 1999 - 2009. Licensed To: Township of Greenwood, County of Wexford, Michigan

*** Information herein deemed reliable but not guaranteed***

Parcel Number: 2410-03-1204 Jurisdiction: GREENWOOD TWP County: WEXFORD Printed on 02/15/2024

Grantor	Grantee	Sale Price	Sale Date	Inst. Type	Terms of Sale	Liber & Page	Verified By	Prcnt. Trans.
WOLFGRAM, LEO B	WOLFGRAM, BERNHART B	0	09/28/2016	QC	21-NOT USED/OTHER	6781/583	DEED	0.0

Property Address

Class: RESIDENTIAL-VACANT Zoning:

School: KINGSLEY AREA SCHOOL

P.R.E. 100% / /

:

2024 Est TCV 12,700

Building Permit(s)	Date	Number	Status

Owner's Name/Address

WOLFGRAM, BENHART B.
3634 E COUNTY LINE RD
KINGSLEY MI 49649

	Improved	X	Vacant

	Public Improvements
X	Dirt Road
X	Gravel Road
	Paved Road
	Storm Sewer
	Sidewalk
	Water
	Sewer
X	Electric
	Gas
	Curb
	Street Lights
	Standard Utilities
	Underground Utils.

	Topography of Site
X	Level
	Rolling
	Low
	High
	Landscaped
	Swamp
	Wooded
	Pond
	Waterfront
	Ravine
	Wetland
	Flood Plain
X	OPEN/PINES

Land Value Estimates for Land Table 4010.LAND VALUES

Description	Frontage	Depth	* Factors * Front	Depth	Rate	%Adj.	Reason	Value
ACREAGE			2.290	Acres	5,546	100		12,700
			2.29	Total Acres		Total Est. Land Value =		12,700

Tax Description

PAR C; COM AT N 1/4 COR OF SEC; E 982.11 FT TO C/L EASMT; S 304.13 FT TO POB: S 304.15 FT; W 327.92 FT; N 304.15 FT; E 327.64 FT TO POB. TOG W/ & SUB TO EASMT --2.29 A M/L-- GW SEC 3 T24N R10W -KINGSLEY- [[ASSESSED W/ 03-1201 '00

Comments/Influences

Who	When	What
GLA	10/31/2022	INSPECTION
GLA	06/09/2015	INSPECTION

Year	Land Value	Building Value	Assessed Value	Board of Review	Tribunal/ Other	Taxable Value
2024	6,400	0	6,400			1,331C
2023	6,300	0	6,300			1,268C
2022	5,200	0	5,200			1,208C
2021	5,100	0	5,100			1,170C

The Equalizer. Copyright (c) 1999 - 2009.
Licensed To: Township of Greenwood, County of Wexford, Michigan

*** Information herein deemed reliable but not guaranteed***

Parcel Number: 2410-03-1205 Jurisdiction: GREENWOOD TWP County: WEXFORD Printed on 02/15/2024

Grantor	Grantee	Sale Price	Sale Date	Inst. Type	Terms of Sale	Liber & Page	Verified By	Prcnt. Trans.
WOLFGRAM, LEO B	WOLFGRAM, BERNHART B	0	09/28/2016	QC	21-NOT USED/OTHER	6781/583	DEED	0.0

Property Address

Owner's Name/Address

WOLFGRAM, BENHART B.
3634 E COUNTY LINE RD
KINGSLEY MI 49649

Tax Description

PAR D; COM AT N 1/4 COR OF SEC; E 982.11 FT TO C/L OF EASMT; S 304.13 FT TO POB: S 304.15 FT; E 327.92 FT; N 304.14 FT; W 327.65 FT TO POB. TOG W/ & SUB TO EASMT --2.29 A M/L-- GW SEC 3 T24N R10W -KINGSLEY- [[ASSESSED W/ 03-1201 '00

Comments/Influences

Class: RESIDENTIAL-VACANT Zoning:

School: KINGSLEY AREA SCHOOL

P.R.E. 100% / /

:

2024 Est TCV 12,700

Building Permit(s)	Date	Number	Status

	Improved	X	Vacant

	Public Improvements
X	Dirt Road
X	Gravel Road
	Paved Road
	Storm Sewer
	Sidewalk
	Water
	Sewer
X	Electric
	Gas
	Curb
	Street Lights
	Standard Utilities
	Underground Utils.

	Topography of Site
	Level
X	Rolling
	Low
	High
	Landscaped
	Swamp
X	Wooded
	Pond
	Waterfront
	Ravine
	Wetland
	Flood Plain
X	OPEN

Who	When	What
GLA	10/31/2022	INSPECTION
GLA	08/16/2015	INSPECTION

Land Value Estimates for Land Table 4010.LAND VALUES

Description	Frontage	Depth	* Factors * Front	Depth	Rate	%Adj.	Reason	Value
ACREAGE			2.290	Acres	5,546	100		12,700
			2.29	Total Acres			Total Est. Land Value =	12,700

Year	Land Value	Building Value	Assessed Value	Board of Review	Tribunal/ Other	Taxable Value
2024	6,400	0	6,400			1,331C
2023	6,300	0	6,300			1,268C
2022	5,200	0	5,200			1,208C
2021	5,100	0	5,100			1,170C

The Equalizer. Copyright (c) 1999 - 2009. Licensed To: Township of Greenwood, County of Wexford, Michigan

*** Information herein deemed reliable but not guaranteed***

Parcel Number: 2410-03-1206 Jurisdiction: GREENWOOD TWP County: WEXFORD Printed on 02/15/2024

Grantor	Grantee	Sale Price	Sale Date	Inst. Type	Terms of Sale	Liber & Page	Verified By	Prcnt. Trans.
WOLFGRAM, LEO B	WOLFGRAM, BERNHART B	0	09/28/2016	QC	21-NOT USED/OTHER	6781/583	DEED	0.0

Property Address

Class: RESIDENTIAL-VACANT Zoning:

School: KINGSLEY AREA SCHOOL

P.R.E. 100% / /

:

2024 Est TCV 12,700

Building Permit(s)	Date	Number	Status

Owner's Name/Address

WOLFGRAM, BENHART B.
3634 E COUNTY LINE RD
KINGSLEY MI 49649

	Improved	X	Vacant

Land Value Estimates for Land Table 4010.LAND VALUES

Description	Frontage	Depth	* Factors * Front	Depth	Rate	%Adj.	Reason	Value
ACREAGE			2.290 Acres		5,546	100		12,700
			2.29 Total Acres		Total Est. Land Value =			12,700

Tax Description

PAR E; COM AT N 1/4 COR OF SEC; E 982.11 FT TO C/L EASMT; S 608.28 FT TO POB: S 303.54 FT; W 328.2 FT;N 303.85 FT; E 327.92 FT TO POB. TOG W/ & SUB TO EASMT --2.29 A M/L-- GW SEC 3 T24N R10W -KINGSLEY- [[ASSESSED W/ 03-1201 '00

Comments/Influences

	Public Improvements
X	Dirt Road
	Gravel Road
	Paved Road
	Storm Sewer
	Sidewalk
	Water
	Sewer
X	Electric
	Gas
	Curb
	Street Lights
	Standard Utilities
	Underground Utils.

	Topography of Site
	Level
	Rolling
	Low
	High
	Landscaped
	Swamp
X	Wooded
	Pond
	Waterfront
	Ravine
	Wetland
	Flood Plain
X	OPEN

Who	When	What
GLA	10/31/2022	INSPECTION
GLA	06/09/2015	INSPECTION

Year	Land Value	Building Value	Assessed Value	Board of Review	Tribunal/ Other	Taxable Value
2024	6,400	0	6,400			1,331C
2023	6,300	0	6,300			1,268C
2022	5,200	0	5,200			1,208C
2021	5,100	0	5,100			1,170C

The Equalizer. Copyright (c) 1999 - 2009. Licensed To: Township of Greenwood, County of Wexford, Michigan

*** Information herein deemed reliable but not guaranteed***

Parcel Number: 2410-03-1207 Jurisdiction: GREENWOOD TWP County: WEXFORD Printed on 02/15/2024

Grantor	Grantee	Sale Price	Sale Date	Inst. Type	Terms of Sale	Liber & Page	Verified By	Prcnt. Trans.
WOLFGRAM, LEO B	WOLFGRAM, BERNHART B	0	09/28/2016	QC	21-NOT USED/OTHER	6781/583	DEED	0.0

Property Address

Class: RESIDENTIAL-VACANT Zoning:

School: KINGSLEY AREA SCHOOL

P.R.E. 100% / /

:

2024 Est TCV 12,645

Building Permit(s)	Date	Number	Status

Owner's Name/Address

WOLFGRAM, BENHART B.
3634 E COUNTY LINE RD
KINGSLEY MI 49649

	Improved	X	Vacant

	Public Improvements
X	Dirt Road
	Gravel Road
	Paved Road
	Storm Sewer
	Sidewalk
	Water
	Sewer
X	Electric
	Gas
	Curb
	Street Lights
	Standard Utilities
	Underground Utils.

	Topography of Site
	Level
	Rolling
	Low
	High
	Landscaped
	Swamp
X	Wooded
	Pond
	Waterfront
	Ravine
	Wetland
	Flood Plain
X	OPEN

Land Value Estimates for Land Table 4010.LAND VALUES

Description	Frontage	Depth	* Factors * Front	Depth	Rate	%Adj.	Reason	Value
ACREAGE			2.280 Acres		5,546	100		12,645
			2.28 Total Acres		Total Est. Land Value =			12,645

Tax Description

PAR F; COM AT N 1/4 COR OF SEC; E 982.11 FT TO C/L EASMT; S 608.28 FT TO POB: S 303.54 FT; E 328.2 FT; N 303.23 FT; W 327.92 FT TO POB. --2.28 A M/L-- TOG W/ & SUB TO EASMT GW SEC 3 T24N R10W -KINGSLEY- [[ASSESSED W/ 03-1201 '00

Comments/Influences

Who	When	What
GLA	10/31/2022	INSPECTION
GLA	06/09/2015	INSPECTION

Year	Land Value	Building Value	Assessed Value	Board of Review	Tribunal/ Other	Taxable Value
2024	6,300	0	6,300			1,323C
2023	6,300	0	6,300			1,260C
2022	5,100	0	5,100			1,200C
2021	5,100	0	5,100			1,162C

The Equalizer. Copyright (c) 1999 - 2009. Licensed To: Township of Greenwood, County of Wexford, Michigan

*** Information herein deemed reliable but not guaranteed***

Parcel Number: 2410-03-1208 Jurisdiction: GREENWOOD TWP County: WEXFORD Printed on 02/15/2024

Grantor	Grantee	Sale Price	Sale Date	Inst. Type	Terms of Sale	Liber & Page	Verified By	Prcnt. Trans.
WOLFGRAM, LEO	WOLFGRAM, BENHART B	0	09/28/2016	QC	21-NOT USED/OTHER	6781/583	DEED	0.0

Property Address

Class: RESIDENTIAL-VACANT Zoning:

School: KINGSLEY AREA SCHOOL

P.R.E. 100% / /

:

2024 Est TCV 46,350

Building Permit(s)	Date	Number	Status

Owner's Name/Address

WOLFGRAM, BENHART B
& LEO B WOLFGRAM
3634 E COUNTY LINE RD
KINGSLEY MI 49649

	Improved	X	Vacant

Land Value Estimates for Land Table 4010.LAND VALUES

Description	Frontage	Depth	* Factors * Front	Depth	Rate	%Adj.	Reason	Value
ACREAGE			10.000 Acres		4,635	100		46,350
			10.00 Total Acres		Total Est. Land Value =			46,350

Tax Description

PAR G; COM AT N 1/4 COR OF SEC; E 654.74 FT; S 912.14 FT TO POB: S 863.25 FT; E 657.6 FT; N 663.25 FT; S 656.4 FT TO POB TOG W/ & SUB TO EASMT 10 A M/L GW SEC 3 T24N R10W -KINGSLEY- [[ASSESSED W/ 03-1201 '00

Comments/Influences

	Public Improvements
X	Dirt Road
	Gravel Road
	Paved Road
	Storm Sewer
	Sidewalk
	Water
	Sewer
X	Electric
	Gas
	Curb
	Street Lights
	Standard Utilities
	Underground Utils.

	Topography of Site
	Level
	Rolling
	Low
	High
	Landscaped
	Swamp
X	Wooded
	Pond
	Waterfront
	Ravine
	Wetland
	Flood Plain

Who	When	What
GLA	10/31/2022	INSPECTION
GLA	06/09/2015	INSPECTION

Year	Land Value	Building Value	Assessed Value	Board of Review	Tribunal/ Other	Taxable Value
2024	23,200	0	23,200			5,414C
2023	13,000	0	13,000			5,157C
2022	12,000	0	12,000			4,912C
2021	12,000	0	12,000			4,756C

The Equalizer. Copyright (c) 1999 - 2009.
Licensed To: Township of Greenwood, County of Wexford, Michigan

*** Information herein deemed reliable but not guaranteed***

Parcel Number: 2410-03-1301 Jurisdiction: GREENWOOD TWP County: WEXFORD Printed on 02/15/2024

Grantor	Grantee	Sale Price	Sale Date	Inst. Type	Terms of Sale	Liber & Page	Verified By	Prcnt. Trans.

Property Address	Class: RESIDENTIAL-VACANT	Zoning:	Building Permit(s)	Date	Number	Status
	School: KINGSLEY AREA SCHOOL					
Owner's Name/Address	P.R.E. 0%					
	:					
KRUGER, CAROLE M LE ETAL 1955 N LAKE MITCHELL DR CADILLAC MI 49601	2024 Est TCV 201,002					

	Improved	X	Vacant

	Public Improvements
X	Dirt Road
X	Gravel Road
	Paved Road
	Storm Sewer
	Sidewalk
	Water
	Sewer
X	Electric
	Gas
	Curb
	Street Lights
	Standard Utilities
	Underground Utils.

	Topography of Site
	Level
X	Rolling
	Low
	High
	Landscaped
	Swamp
X	Wooded
	Pond
	Waterfront
	Ravine
	Wetland
	Flood Plain
X	OPEN/PINES

Tax Description

S 1/2 OF NE 1/4 80 A. GW. SEC. 3 T24N R10W -KINGSLEY-

Comments/Influences

Who	When	What
GLA	10/31/2022	INSPECTION
GLA	06/09/2015	INSPECTION

Land Value Estimates for Land Table 4010.LAND VALUES

Description	Frontage	Depth	* Factors * Front	Depth	Rate	%Adj.	Reason	Value
ACREAGE			79.000 Acres		2,544	100		201,002
ROW			1.000 Acres		0	100		0
			80.00 Total Acres		Total Est. Land Value =			201,002

Year	Land Value	Building Value	Assessed Value	Board of Review	Tribunal/ Other	Taxable Value
2024	100,500	0	100,500			27,537C
2023	85,100	0	85,100			26,226C
2022	67,200	0	67,200			24,978C
2021	61,400	0	61,400			24,181C

The Equalizer. Copyright (c) 1999 - 2009.
Licensed To: Township of Greenwood, County of Wexford, Michigan

*** Information herein deemed reliable but not guaranteed***

Parcel Number: 2410-03-2101 Jurisdiction: GREENWOOD TWP County: WEXFORD Printed on 02/15/2024

Grantor	Grantee	Sale Price	Sale Date	Inst. Type	Terms of Sale	Liber & Page	Verified By	Prcnt. Trans.
NORTH, PAUL O	NORTH, PAUL O TRUST	10	11/11/2021	QC	14-INTO/OUT OF TRUST	691/1681	DEED	0.0
DAYS, AUDREY L	NORTH, PAUL O	0	07/16/2015	QC	21-NOT USED/OTHER	675/1968	DEED	0.0
DAYS, AUDREY L	DAYS, AUDREY L & PAUL O NC	0	09/04/2013	QC	21-NOT USED/OTHER	662/359	DEED	50.0
DAYS, AUDREY L TRUST	DAYS, AUDREY L	0	12/06/2012	QC	14-INTO/OUT OF TRUST	654/1749	DEED	0.0

Property Address

3444 E COUNTY LINE RD

Owner's Name/Address

NORTH, PAUL O TRUST
3444 E COUNTY LINE RD
KINGSLEY MI 49649

Tax Description

FRL E 1/4 OF FRL NW 1/4 47.34 A. GW. SEC. 3 T24N R10W -KINGSLEY-

Comments/Influences

Class: RESIDENTIAL-IMPROV Zoning:

School: KINGSLEY AREA SCHOOL

P.R.E. 100% 07/18/2022 Qual. Ag.

:

2024 Est TCV 151,765 TCV/TFA: 0.00

Building Permit(s)	Date	Number	Status
Pole Barn	05/07/2015	PB00-0000	COMPLETE

X Improved | Vacant

	Public Improvements
	Dirt Road
X	Gravel Road
	Paved Road
	Storm Sewer
	Sidewalk
	Water
	Sewer
X	Electric
	Gas
	Curb
	Street Lights
	Standard Utilities
	Underground Utils.

	Topography of Site
X	Level
X	Rolling
	Low
	High
	Landscaped
	Swamp
X	Wooded
	Pond
	Waterfront
	Ravine
	Wetland
	Flood Plain
X	OPEN

Who	When	What
GLA	10/31/2022	INSPECTION
GLA	06/09/2015	INSPECTION

The Equalizer. Copyright (c) 1999 - 2009. Licensed To: Township of Greenwood, County of Wexford, Michigan

Land Value Estimates for Land Table 4010.LAND VALUES

Description	Frontage	Depth	* Factors * Front	Depth	Rate	%Adj.	Reason	Value
ACREAGE			45.830 Acres		2,722	100		124,749
ROW			1.000 Acres		0	100		0
			46.83 Total Acres		Total Est. Land Value =			124,749

Year	Land Value	Building Value	Assessed Value	Board of Review	Tribunal/ Other	Taxable Value
2024	62,400	13,500	75,900			41,077C
2023	61,700	11,600	73,300			39,121C
2022	40,600	6,600	47,200		47,200W	33,354C
2021	39,000	6,600	45,600			32,289C

*** Information herein deemed reliable but not guaranteed***

Building Type

X	Single Family
	Mobile Home
	Town Home
	Duplex
	A-Frame
X	Wood Frame

Building Style: PLAIN

Yr Built	Remodeled
0	0

Condition: Good

Room List

	Basement
	1st Floor
	2nd Floor
	Bedrooms

(1) Exterior

	Wood/Shingle
X	Aluminum/Vinyl
	Brick
X	Insulation

(2) Windows

	Many		Large
X	Avg.	X	Avg.
	Few		Small

	Wood Sash
	Metal Sash
X	Vinyl Sash
	Double Hung
	Horiz. Slide
	Casement
	Double Glass
	Patio Doors
X	Storms & Screens

(3) Roof

X	Gable		Gambrel
	Hip		Mansard
	Flat		Shed

X	Asphalt Shingle

Chimney:

(3) Roof (cont.)

	Eavestrough
X	Insulation
0	Front Overhang
0	Other Overhang

(4) Interior

X	Drywall		Plaster
	Paneled		Wood T&G

Trim & Decoration

	Ex	X	Ord		Min

Size of Closets

	Lg	X	Ord		Small

Doors:		Solid	X	H.C.	

(5) Floors

Kitchen:
Other: Linoleum
Other: Carpeted

(6) Ceilings

X	Drywall

(7) Excavation

Basement: 0 S.F.
Crawl: 0 S.F.
Slab: 0 S.F.
Height to Joists: 0.0

(8) Basement

	Conc. Block
	Poured Conc.
	Stone
	Treated Wood
	Concrete Floor

(9) Basement Finish

	Recreation SF
	Living SF
	Walkout Doors (B)
	No Floor SF
	Walkout Doors (A)

(10) Floor Support

Joists:
Unsupported Len:
Cntr.Sup:

(11) Heating/Cooling

X	Gas		Oil		Elec.
	Wood		Coal		Steam

	Forced Air w/o Ducts
X	Forced Air w/ Ducts
	Forced Hot Water
	Electric Baseboard
	Elec. Ceil. Radiant
	Radiant (in-floor)
	Electric Wall Heat
	Space Heater
	Wall/Floor Furnace
	Forced Heat & Cool
	Heat Pump
	No Heating/Cooling

	Central Air
	Wood Furnace

(12) Electric

150	Amps Service

No./Qual. of Fixtures

	Ex.	X	Ord.		Min

No. of Elec. Outlets

	Many	X	Ave.		Few

(13) Plumbing

	Average Fixture(s)
1	3 Fixture Bath
	2 Fixture Bath
	Softener, Auto
	Softener, Manual
	Solar Water Heat
	No Plumbing
	Extra Toilet
	Extra Sink
	Separate Shower
	Ceramic Tile Floor
	Ceramic Tile Wains
	Ceramic Tub Alcove
	Vent Fan

(14) Water/Sewer

	Public Water
	Public Sewer
1	Water Well
1	1000 Gal Septic
	2000 Gal Septic

Lump Sum Items:

(15) Built-ins

	Appliance Allow.
	Cook Top
	Dishwasher
	Garbage Disposal
	Bath Heater
	Vent Fan
	Hot Tub
	Unvented Hood
	Vented Hood
	Intercom
	Jacuzzi Tub
	Jacuzzi repl.Tub
	Oven
	Microwave
	Standard Range
	Self Clean Range
	Sauna
	Trash Compactor
	Central Vacuum
	Security System

(15) Fireplaces

	Interior 1 Story
	Interior 2 Story
	2nd/Same Stack
	Two Sided
	Exterior 1 Story
	Exterior 2 Story
	Prefab 1 Story
	Prefab 2 Story
	Heat Circulator
	Raised Hearth
	Wood Stove
	Direct-Vented Gas

Class: D
Effec. Age: 10
Floor Area: 0
Total Base New : 11,181 E.C.F.
Total Depr Cost: 10,063 X 1.297
Estimated T.C.V: 13,052

(16) Porches/Decks

Area	Type

(17) Garage

Year Built:
Car Capacity:
Class: D
Exterior: Pole
Brick Ven.: 0
Stone Ven.: 0
Common Wall: Detache
Foundation: 18 Inch
Finished ?:
Auto. Doors: 0
Mech. Doors: 0
Area: 300
% Good: 0
Storage Area: 0
No Conc. Floor: 300

Bsmnt Garage:

Carport Area:
Roof:

Cost Est. for Res. Bldg: 1 Single Family PLAIN Cls D Blt 0
(11) Heating System: Forced Air w/ Ducts
Ground Area = 0 SF Floor Area = 0 SF.
Phy/Ab.Phy/Func/Econ/Comb. % Good=90/100/100/100/90

Building Areas

Stories	Exterior	Foundation	Size	Cost New	Depr. Cost
Other Additions/Adjustments					
Water/Sewer					
1000 Gal Septic			1	4,293	3,864
Water Well, 100 Feet			1	5,545	4,990
Garages					
Class: D Exterior: Pole (Unfinished)					
Base Cost			300	8,412	7,571
No Concrete Floor			300	-1,683	-1,515
Class: D Exterior: Pole (Unfinished)					
No Concrete Floor			960	-5,386	-4,847
			Totals:	11,181	10,063

Notes:

ECF (RESIDENTIAL) 1.297 => TCV: 13,052

*** Information herein deemed reliable but not guaranteed***

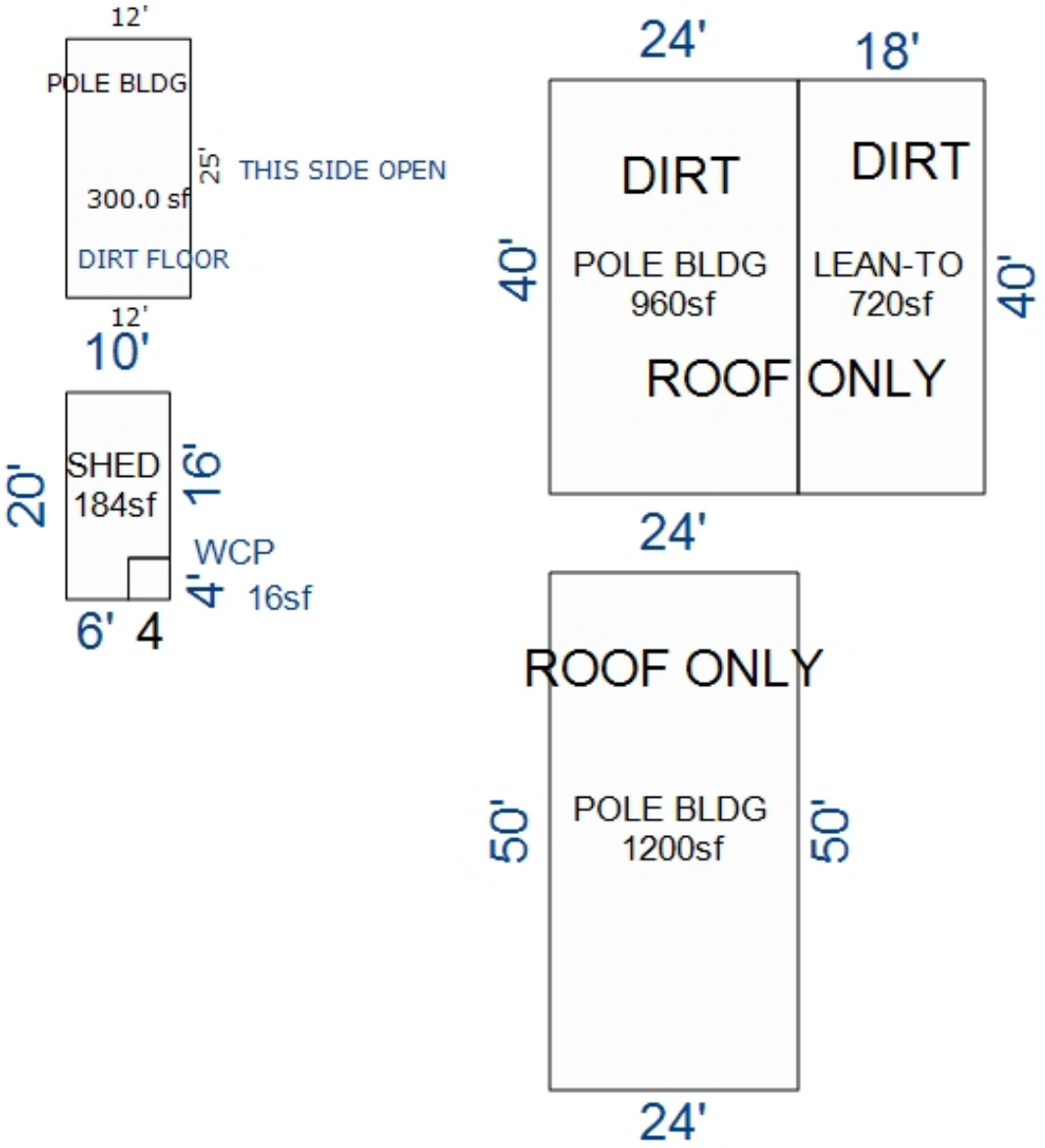

*** Information herein deemed reliable but not guaranteed***

Building Type	Arenas	Arenas			
Year Built					
Class/Construction	D,Pole	D,Pole			
Quality/Exterior	Cheap	Cheap			
# of Walls, Perimeter	4 Wall, 128	4 Wall, 148			
Height	12	14			
Heating System	No Heating/Cooling	No Heating/Cooling			
Length/Width/Area	40 x 24 = 960	50 x 24 = 1200			
Cost New	$ 13,325	$ 16,800			
Phy./Func./Econ. %Good	49/100/100 49.0	49/100/100 49.0			
Depreciated Cost	$ 6,529	$ 8,232			
+ Unit-In-Place Items	$ 0	$ 0			
Description, Size X Rate X %Good = Cost Itemized ->\ Unit-In-Place ->\ Items ->\					
E.C.F.	X 0.946	X 0.946			
% Good	49	49			
Est. True Cash Value	$ 6,177	$ 7,787			
Comments:					
Total Estimated True Cash Value of Agricultural Improvements / This Card: 13964 / All Cards: 13964					

*** Information herein deemed reliable but not guaranteed***

Parcel Number: 2410-03-2102 Jurisdiction: GREENWOOD TWP County: WEXFORD Printed on 02/15/2024

Grantor	Grantee	Sale Price	Sale Date	Inst. Type	Terms of Sale	Liber & Page	Verified By	Prcnt. Trans.

Property Address

3298 E COUNTY LINE RD

Owner's Name/Address

GRAHAM, MICHAEL
& SUSAN
3298 E COUNTY LINE RD
KINGSLEY MI 49649

Tax Description

PAR "D" COM AT NW COR OF SEC: TH E 1310.31 FT TO POB: E 601.50 FT; S 2286.38 FT; W 175.33 FT; S 621.50 FT; W 60 FT; N 621.50 FT; W 353.96 FT; N 2281.44 FT TO POB. -32.06 A M/L- GW. SEC. 3 T24N R10W -KINGSLEY-

Comments/Influences

Class: RESIDENTIAL-IMPROV Zoning:

School: KINGSLEY AREA SCHOOL

P.R.E. 100% / /

:

2024 Est TCV 569,383 TCV/TFA: 299.05

Building Permit(s)	Date	Number	Status
RESIDENTIAL - NEW	11/09/2007	PM9912	
RESIDENTIAL - NEW	08/22/2007	PE18032	
RESIDENTIAL - REMODEL	04/10/2007	PB13487	
RESIDENTIAL - REMODEL	06/12/2001	PB10344	

X Improved | Vacant

Public Improvements

- Dirt Road
- X Gravel Road
- Paved Road
- Storm Sewer
- Sidewalk
- Water
- Sewer
- X Electric
- Gas
- Curb
- Street Lights
- Standard Utilities
- Underground Utils.

Topography of Site

- X Level
- X Rolling
- Low
- High
- Landscaped
- Swamp
- X Wooded
- Pond
- Waterfront
- Ravine
- Wetland
- Flood Plain
- X OPEN

Who	When	What
GLA	10/31/2022	INSPECTION
GLA	06/09/2015	INSPECTION

Land Value Estimates for Land Table 4010.LAND VALUES

Description	Frontage	Depth	* Factors * Front	Depth	Rate	%Adj.	Reason	Value
ACREAGE			39.540 Acres		2,722	100		107,628
ROW			0.460 Acres		0	100		0
			40.00 Total Acres		Total Est. Land Value =			107,628

Land Improvement Cost Estimates

Description	Rate	Size	% Good	Cash Value
D/W/P: Asphalt Paving	3.12	6788	42	8,895
D/W/P: 4in Concrete	7.01	1732	42	5,099
Pool: Concrete	77.90	820	52	33,217
Wood Frame	28.20	120	79	2,673
Wood Frame	23.74	304	43	3,103
Total Estimated Land Improvements True Cash Value =				52,987

Year	Land Value	Building Value	Assessed Value	Board of Review	Tribunal/ Other	Taxable Value
2024	53,800	230,900	284,700			162,966C
2023	47,500	191,900	239,400			155,206C
2022	37,700	163,800	201,500			147,816C
2021	33,700	164,000	197,700			143,094C

The Equalizer. Copyright (c) 1999 - 2009. Licensed To: Township of Greenwood, County of Wexford, Michigan

*** Information herein deemed reliable but not guaranteed***

Building Type

X	Single Family
	Mobile Home
	Town Home
	Duplex
	A-Frame
X	Wood Frame

Building Style: FARMHOUSE

Yr Built	Remodeled
0	0

Condition: Good

Room List

	Basement
	1st Floor
	2nd Floor
	Bedrooms

(1) Exterior

	Wood/Shingle
X	Aluminum/Vinyl
	Brick
X	Insulation

(2) Windows

X	Many Avg. Few	X	Large Avg. Small

	Wood Sash
	Metal Sash
X	Vinyl Sash
	Double Hung
	Horiz. Slide
	Casement
	Double Glass
	Patio Doors
X	Storms & Screens

(3) Roof

X	Gable		Gambrel
	Hip		Mansard
	Flat		Shed

X	Asphalt Shingle

Chimney:

(3) Roof (cont.)

	Eavestrough
X	Insulation
0	Front Overhang
0	Other Overhang

(4) Interior

X	Drywall Paneled		Plaster Wood T&G

Trim & Decoration

	Ex	X	Ord		Min

Size of Closets

	Lg	X	Ord		Small

Doors: | | Solid | X | H.C.

(5) Floors

Kitchen:
Other: Linoleum
Other: Carpeted

(6) Ceilings

X	Drywall		

(7) Excavation

Basement: 1620 S.F.
Crawl: 0 S.F.
Slab: 0 S.F.
Height to Joists: 0.0

(8) Basement

	Conc. Block
	Poured Conc.
	Stone
	Treated Wood
	Concrete Floor

(9) Basement Finish

1500	Recreation	SF
	Living	SF
	Walkout Doors (B)	
	No Floor	SF
	Walkout Doors (A)	

(10) Floor Support

Joists:
Unsupported Len:
Cntr.Sup:

(11) Heating/Cooling

X	Gas Wood		Oil Coal		Elec. Steam

	Forced Air w/o Ducts
X	Forced Air w/ Ducts
	Forced Hot Water
	Electric Baseboard
	Elec. Ceil. Radiant
	Radiant (in-floor)
	Electric Wall Heat
	Space Heater
	Wall/Floor Furnace
	Forced Heat & Cool
	Heat Pump
	No Heating/Cooling
	Central Air
	Wood Furnace

(12) Electric

150	Amps Service

No./Qual. of Fixtures

	Ex.	X	Ord.		Min

No. of Elec. Outlets

	Many	X	Ave.		Few

(13) Plumbing

3	Average Fixture(s)
	3 Fixture Bath
	2 Fixture Bath
	Softener, Auto
	Softener, Manual
	Solar Water Heat
	No Plumbing
	Extra Toilet
	Extra Sink
	Separate Shower
	Ceramic Tile Floor
	Ceramic Tile Wains
	Ceramic Tub Alcove
	Vent Fan

(14) Water/Sewer

	Public Water
	Public Sewer
1	Water Well
1	1000 Gal Septic
	2000 Gal Septic

Lump Sum Items:

(15) Built-ins

	Appliance Allow.
	Cook Top
	Dishwasher
	Garbage Disposal
	Bath Heater
	Vent Fan
	Hot Tub
	Unvented Hood
	Vented Hood
	Intercom
	Jacuzzi Tub
	Jacuzzi repl.Tub
	Oven
	Microwave
	Standard Range
	Self Clean Range
	Sauna
	Trash Compactor
	Central Vacuum
	Security System

(15) Fireplaces

	Interior 1 Story
1	Interior 2 Story
	2nd/Same Stack
	Two Sided
	Exterior 1 Story
	Exterior 2 Story
	Prefab 1 Story
	Prefab 2 Story
	Heat Circulator
	Raised Hearth
	Wood Stove
	Direct-Vented Gas

Class: C
Effec. Age: 25
Floor Area: 1,904
Total Base New : 420,224 E.C.F.
Total Depr Cost: 315,164 X 1.297
Estimated T.C.V: 408,768

(16) Porches/Decks

Area	Type
110	WCP (1 Story)
120	WSEP (1 Story)
184	WPP
130	WGEP (1 Story)
80	WPP
48	WPP

(17) Garage

Year Built:
Car Capacity:
Class: C
Exterior: Siding
Brick Ven.: 0
Stone Ven.: 0
Common Wall: Detache
Foundation: 18 Inch
Finished ?:
Auto. Doors: 0
Mech. Doors: 0
Area: 672
% Good: 0
Storage Area: 504
No Conc. Floor: 0

Bsmnt Garage:

Carport Area:
Roof:

Cost Est. for Res. Bldg: 1 Single Family FARMHOUSE Cls C Blt 0
(11) Heating System: Forced Air w/ Ducts
Ground Area = 1620 SF Floor Area = 1904 SF.
Phy/Ab.Phy/Func/Econ/Comb. % Good=75/100/100/100/75
Building Areas

Stories	Exterior	Foundation	Size	Cost New	Depr. Cost
1.25 Story	Siding	Basement	1,134		
1 Story	Siding	Basement	486		
			Total:	252,434	189,324
Other Additions/Adjustments					
Recreation Room			1500	29,205	21,904
Plumbing					
3 Fixture Bath			2	9,357	7,018
Water/Sewer					
1000 Gal Septic			1	4,899	3,674
Water Well, 100 Feet			1	5,849	4,387
Porches					
WCP (1 Story)			110	5,179	3,884
WSEP (1 Story)			120	6,967	5,225
WPP			184	4,392	3,294
WGEP (1 Story)			130	11,599	8,699
WPP			80	2,711	2,033
WPP			48	2,043	1,532
Garages					
Class: C Exterior: Siding Foundation: 18 Inch (Unfinished)					
Base Cost			672	25,079	18,809
Storage Over Garage			504	6,975	5,231
Class: C Exterior: Pole (Unfinished)					
Base Cost			576	16,831	12,623
Class: C Exterior: Pole (Unfinished)					

<<<<< Calculations too long. See Valuation printout for complete pricing. >>>>>

*** Information herein deemed reliable but not guaranteed***

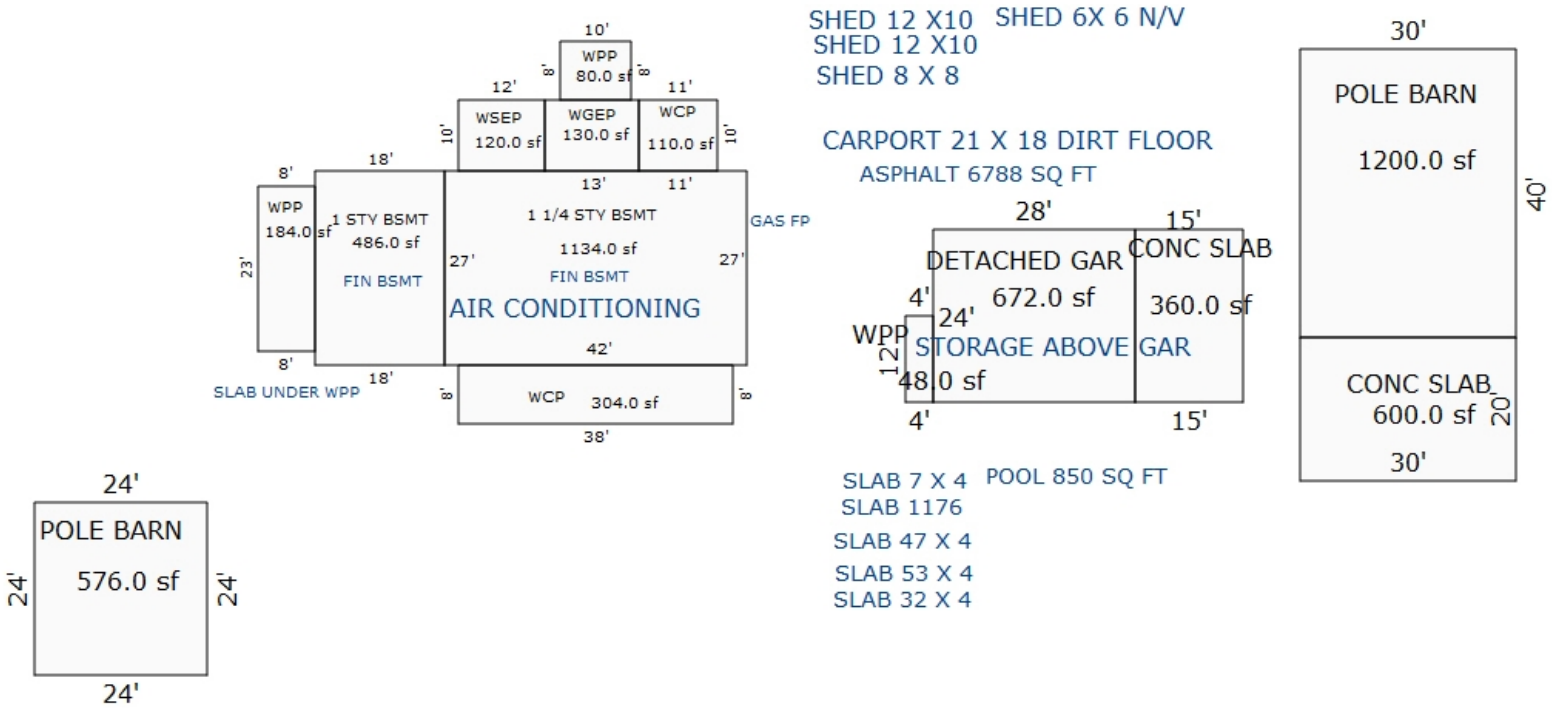

Sketch by Apex Sketch

*** Information herein deemed reliable but not guaranteed***

Parcel Number: 2410-03-2103 Jurisdiction: GREENWOOD TWP County: WEXFORD Printed on 02/15/2024

Grantor	Grantee	Sale Price	Sale Date	Inst. Type	Terms of Sale	Liber & Page	Verified By	Prcnt. Trans.

Property Address

Owner's Name/Address

SOUSA, BRIAN
& FAITH M
3273 E 2 1/2 RD
KINGSLEY MI 49649

Tax Description

PAR "B" COM AT W 1/4 COR OF SEC; TH E 1470.04 FT TO POB: N 621.46 FT; E 176.98 FT; S 621.50 FT; W 175.33 FT TO POB. - 2.51 A M/L- GW SEC 3 T 24N R10W -KINGSLEY- [[ASSESSED W/ 03-2102 '98

Comments/Influences

Class: RESIDENTIAL-IMPROV Zoning:

School: KINGSLEY AREA SCHOOL

P.R.E. 100% / /

:

2024 Est TCV 409,218 TCV/TFA: 190.51

Building Permit(s)	Date	Number	Status

X Improved | Vacant

	Public Improvements
	Dirt Road
X	Gravel Road
	Paved Road
	Storm Sewer
	Sidewalk
	Water
	Sewer
X	Electric
	Gas
	Curb
	Street Lights
	Standard Utilities
	Underground Utils.

	Topography of Site
	Level
X	Rolling
	Low
	High
	Landscaped
	Swamp
X	Wooded
	Pond
	Waterfront
	Ravine
	Wetland
	Flood Plain
X	OPEN

Who	When	What
GLA	10/31/2022	INSPECTION
GLA	06/09/2015	INSPECTION

Land Value Estimates for Land Table 4010.LAND VALUES

Description	Frontage	Depth	* Factors * Front	Depth	Rate	%Adj.	Reason	Value
ACREAGE			2.380 Acres		5,546	100		13,199
ROW			0.130 Acres		0	100		0
			2.51 Total Acres		Total Est. Land Value =			13,199

Land Improvement Cost Estimates

Description	Rate	Size	% Good	Cash Value
D/W/P: 4in Concrete	7.01	852	55	3,285
Total Estimated Land Improvements True Cash Value =				3,285

Year	Land Value	Building Value	Assessed Value	Board of Review	Tribunal/ Other	Taxable Value
2024	6,600	198,000	204,600			122,083C
2023	6,500	161,900	168,400			116,270C
2022	5,400	135,900	141,300			110,734C
2021	5,200	137,400	142,600			107,197C

The Equalizer. Copyright (c) 1999 - 2009. Licensed To: Township of Greenwood, County of Wexford, Michigan

*** Information herein deemed reliable but not guaranteed***

Building Type

X	Single Family
	Mobile Home
	Town Home
	Duplex
	A-Frame
X	Wood Frame

Building Style: PLAIN

Yr Built	Remodeled
0	0

Condition: Good

Room List

	Basement
	1st Floor
	2nd Floor
	Bedrooms

(1) Exterior

	Wood/Shingle
X	Aluminum/Vinyl
	Brick
X	Insulation

(2) Windows

X	Many Avg. Few		Large Avg. Small

	Wood Sash
	Metal Sash
X	Vinyl Sash
	Double Hung
	Horiz. Slide
	Casement
	Double Glass
	Patio Doors
X	Storms & Screens

(3) Roof

X	Gable		Gambrel
	Hip		Mansard
	Flat		Shed

X	Asphalt Shingle

Chimney:

(3) Roof (cont.)

	Eavestrough
X	Insulation
0	Front Overhang
0	Other Overhang

(4) Interior

X	Drywall Paneled		Plaster Wood T&G

Trim & Decoration

	Ex	X	Ord		Min

Size of Closets

	Lg	X	Ord		Small

Doors:		Solid	X	H.C.	

(5) Floors

Kitchen:
Other: Linoleum
Other: Carpeted

(6) Ceilings

X	Drywall

(7) Excavation

Basement: 2148 S.F.
Crawl: 0 S.F.
Slab: 0 S.F.
Height to Joists: 0.0

(8) Basement

	Conc. Block
	Poured Conc.
	Stone
	Treated Wood
	Concrete Floor

(9) Basement Finish

	Recreation	SF
	Living	SF
1	Walkout Doors	(B)
	No Floor	SF
	Walkout Doors	(A)

(10) Floor Support

Joists:
Unsupported Len:
Cntr.Sup:

(11) Heating/Cooling

X	Gas		Oil		Elec.
	Wood		Coal		Steam

	Forced Air w/o Ducts
X	Forced Air w/ Ducts
	Forced Hot Water
	Electric Baseboard
	Elec. Ceil. Radiant
	Radiant (in-floor)
	Electric Wall Heat
	Space Heater
	Wall/Floor Furnace
	Forced Heat & Cool
	Heat Pump
	No Heating/Cooling

	Central Air
	Wood Furnace

(12) Electric

150	Amps Service

No./Qual. of Fixtures

	Ex.	X	Ord.		Min

No. of Elec. Outlets

	Many	X	Ave.		Few

(13) Plumbing

	Average Fixture(s)
2	3 Fixture Bath
	2 Fixture Bath
	Softener, Auto
	Softener, Manual
	Solar Water Heat
	No Plumbing
	Extra Toilet
	Extra Sink
	Separate Shower
	Ceramic Tile Floor
	Ceramic Tile Wains
	Ceramic Tub Alcove
	Vent Fan

(14) Water/Sewer

	Public Water
	Public Sewer
1	Water Well
1	1000 Gal Septic
	2000 Gal Septic

Lump Sum Items:

(15) Built-ins

	Appliance Allow.
	Cook Top
	Dishwasher
	Garbage Disposal
	Bath Heater
	Vent Fan
	Hot Tub
	Unvented Hood
	Vented Hood
	Intercom
	Jacuzzi Tub
	Jacuzzi repl.Tub
	Oven
	Microwave
	Standard Range
	Self Clean Range
	Sauna
	Trash Compactor
	Central Vacuum
	Security System

(15) Fireplaces

	Interior 1 Story
	Interior 2 Story
	2nd/Same Stack
	Two Sided
	Exterior 1 Story
	Exterior 2 Story
	Prefab 1 Story
	Prefab 2 Story
	Heat Circulator
	Raised Hearth
	Wood Stove
	Direct-Vented Gas

Class: C
Effec. Age: 20
Floor Area: 2,148
Total Base New : 378,661 E.C.F.
Total Depr Cost: 302,802 X 1.297
Estimated T.C.V: 392,734

(16) Porches/Decks

Area	Type
288	WPP
288	WPP
49	WPP
160	WCP (1 Story)

(17) Garage

Year Built:
Car Capacity:
Class: C
Exterior: Pole
Brick Ven.: 0
Stone Ven.: 0
Common Wall: Detache
Foundation: 18 Inch
Finished ?:
Auto. Doors: 0
Mech. Doors: 0
Area: 1600
% Good: 0
Storage Area: 0
No Conc. Floor: 0

Bsmnt Garage:

Carport Area:
Roof:

Cost Est. for Res. Bldg: 1 Single Family PLAIN Cls C Blt 0
(11) Heating System: Forced Air w/ Ducts
Ground Area = 2148 SF Floor Area = 2148 SF.
Phy/Ab.Phy/Func/Econ/Comb. % Good=80/100/100/100/80
Building Areas

Stories	Exterior	Foundation	Size	Cost New	Depr. Cost	
1 Story	Siding	Basement	1,428			
1 Story	Siding	Basement	720			
			Total:	295,515	236,411	
Other Additions/Adjustments						
Basement, Outside Entrance, Below Grade			1	2,578	2,062	
Plumbing						
3 Fixture Bath			1	4,678	3,742	
Water/Sewer						
1000 Gal Septic			1	4,899	3,919	
Water Well, 100 Feet			1	5,849	4,679	
Porches						
WPP			288	5,095	4,076	
WPP			288	5,095	4,076	
WPP			49	2,059	1,647	
WCP (1 Story)			160	6,941	5,553	
Garages						
Class: C Exterior: Pole (Unfinished)						
Base Cost			1600	38,880	31,104	
Local Cost Items						
POLE LEANTO DIRT			560	2,072	1,533	*7
OUTSIDE FURNACE			1	5,000	4,000	
			Totals:	378,661	302,802	

Notes:
ECF (RESIDENTIAL) 1.297 => TCV: 392,734

*** Information herein deemed reliable but not guaranteed***

SHED N/V

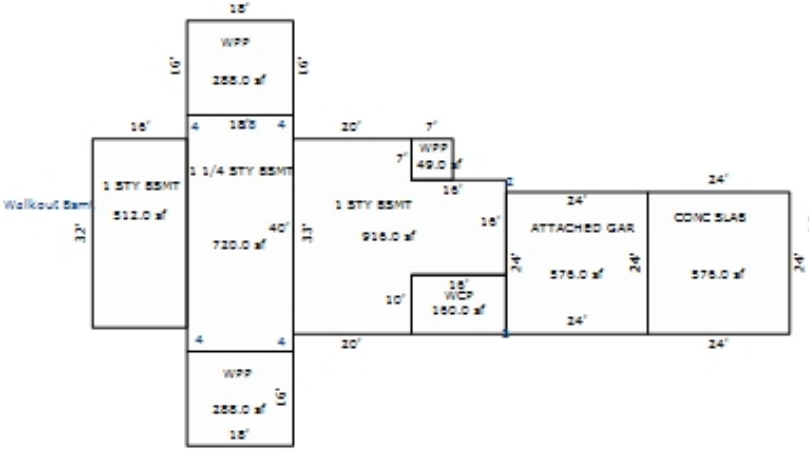

Outside Furance

Slab 54 x 4= 216

Storage above Gar

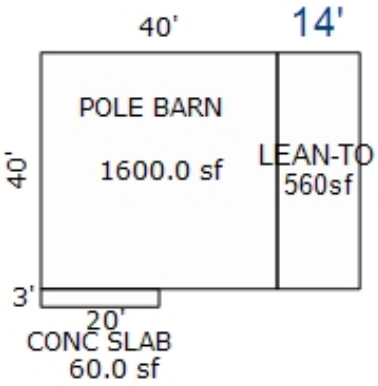

*** Information herein deemed reliable but not guaranteed***

Parcel Number: 2410-03-2104 Jurisdiction: GREENWOOD TWP County: WEXFORD Printed on 02/15/2024

Grantor	Grantee	Sale Price	Sale Date	Inst. Type	Terms of Sale	Liber & Page	Verified By	Prcnt. Trans.
FEDERAL NATIONAL MORTGAGE	DANET, MARCEL S	117,500	09/11/2014	WD	11-FROM LENDING INSTITUTI	670/2521	DEED	100.0
NATIONSTAR MORTGAGE LLC	FEDERAL NATIONAL MORTGAGE	0	11/10/2013	QC	17-LENDING TO LENDING	659/2109	DEED	0.0
ZUBALIK, ANTHONY J & MICHE	NATIONSTAR MORTGAGE LLC	0	05/03/2013	SD	10-FORECLOSURE	659/316	DEED	0.0
FEDERAL NATIONAL MORTGAGE	ZUBALIK, ANTHONY J & MICHE	134,900	07/19/2007	WD	21-NOT USED/OTHER	602/2146	DEED	100.0

Property Address

3353 E 2 1/2 RD

Owner's Name/Address

DANET, MARCEL S
3353 E 2 1/2 RD
KINGSLEY MI 49649

Tax Description

PAR "C" COM AT W 1/4 COR OF SEC; TH E 1705.37 FT TO POB: N 621.50 FT; E 175.33 FT; S 621.50 FT; W 175.33 FT TO POB. 2.5 A M/L GW SEC 3 T24N R10W -KINGSLEY- [[ASSESSED W/03-2102 '98

Comments/Influences

Class: RESIDENTIAL-IMPROV Zoning:

School: KINGSLEY AREA SCHOOL

P.R.E. 100% 09/12/2014

:

2024 Est TCV 330,502 TCV/TFA: 157.68

Building Permit(s)	Date	Number	Status
RESIDENTIAL - REMODEL	06/25/2004	PM7667	
RESIDENTIAL - REMODEL	05/15/2003	PM6714	
RESIDENTIAL - REMODEL	04/23/2003	PB11478	
RESIDENTIAL - REMODEL	04/23/2003	PE15242	

X	Improved		Vacant

	Public Improvements
	Dirt Road
X	Gravel Road
	Paved Road
	Storm Sewer
	Sidewalk
	Water
	Sewer
X	Electric
	Gas
	Curb
	Street Lights
	Standard Utilities
	Underground Utils.

	Topography of Site
	Level
X	Rolling
	Low
	High
	Landscaped
	Swamp
	Wooded
	Pond
	Waterfront
	Ravine
	Wetland
	Flood Plain
X	OPEN

Who	When	What
GLA	10/31/2022	INSPECTION
GLA	06/09/2015	INSPECTION

Land Value Estimates for Land Table 4010.LAND VALUES

Description	Frontage	Depth	* Factors * Front	Depth	Rate	%Adj.	Reason	Value
HELSEL RIV LOW	175.33	621.50	1.0000	0.0000	315	100*		0
ACREAGE			2.367 Acres		5,546	100		13,127
ROW			0.133 Acres		0	100		0

* denotes lines that do not contribute to the total acreage calculation.

175 Actual Front Feet, 2.50 Total Acres Total Est. Land Value = 13,127

Land Improvement Cost Estimates

Description	Rate	Size	% Good	Cash Value
D/W/P: 4in Concrete	6.11	1035	50	3,162

Total Estimated Land Improvements True Cash Value = 3,162

Year	Land Value	Building Value	Assessed Value	Board of Review	Tribunal/ Other	Taxable Value
2024	6,600	158,700	165,300			101,347C
2023	6,500	129,600	136,100			96,521C
2022	5,300	109,500	114,800			91,925C
2021	5,200	110,500	115,700			88,989C

The Equalizer. Copyright (c) 1999 - 2009. Licensed To: Township of Greenwood, County of Wexford, Michigan

*** Information herein deemed reliable but not guaranteed***

Building Type

X	Single Family
	Mobile Home
	Town Home
	Duplex
	A-Frame
X	Wood Frame

Building Style: RANCH

Yr Built	Remodeled
1999	2003

Condition: Fair

Room List

	Basement
	1st Floor
	2nd Floor
	Bedrooms

(1) Exterior

	Wood/Shingle
	Aluminum/Vinyl
	Brick
X	Vinyl
	Insulation

(2) Windows

X	Many Avg. Few	X	Large Avg. Small

	Wood Sash
	Metal Sash
X	Vinyl Sash
X	Double Hung
	Horiz. Slide
	Casement
	Double Glass
X	Patio Doors
X	Storms & Screens

(3) Roof

X	Gable Hip Flat		Gambrel Mansard Shed
X	Asphalt Shingle		

Chimney:

(3) Roof (cont.)

	Eavestrough
	Insulation
0	Front Overhang
0	Other Overhang

(4) Interior

	Drywall Paneled		Plaster Wood T&G

Trim & Decoration

	Ex		Ord		Min

Size of Closets

	Lg		Ord		Small

Doors:		Solid		H.C.	

(5) Floors

Kitchen:
Other:
Other:

(6) Ceilings

(7) Excavation

Basement: 0 S.F.
Crawl: 2096 S.F.
Slab: 0 S.F.
Height to Joists: 0.0

(8) Basement

	Conc. Block
	Poured Conc.
	Stone
	Treated Wood
	Concrete Floor

(9) Basement Finish

	Recreation	SF
	Living	SF
1	Walkout Doors (B)	
	No Floor	SF
	Walkout Doors (A)	

(10) Floor Support

Joists:
Unsupported Len:
Cntr.Sup:

(11) Heating/Cooling

X	Gas		Oil		Elec.		
	Wood		Coal		Steam		

	Forced Air w/o Ducts
X	Forced Air w/ Ducts
	Forced Hot Water
	Electric Baseboard
	Elec. Ceil. Radiant
	Radiant (in-floor)
	Electric Wall Heat
	Space Heater
	Wall/Floor Furnace
	Forced Heat & Cool
	Heat Pump
	No Heating/Cooling

	Central Air
	Wood Furnace

(12) Electric

0	Amps Service

No./Qual. of Fixtures

	Ex.		Ord.		Min

No. of Elec. Outlets

	Many		Ave.		Few

(13) Plumbing

1	Average Fixture(s)
	3 Fixture Bath
	2 Fixture Bath
	Softener, Auto
	Softener, Manual
	Solar Water Heat
	No Plumbing
	Extra Toilet
	Extra Sink
	Separate Shower
	Ceramic Tile Floor
	Ceramic Tile Wains
	Ceramic Tub Alcove
	Vent Fan

(14) Water/Sewer

	Public Water
	Public Sewer
1	Water Well
1	1000 Gal Septic
	2000 Gal Septic

Lump Sum Items:

(15) Built-ins

	Appliance Allow.
	Cook Top
	Dishwasher
	Garbage Disposal
	Bath Heater
	Vent Fan
	Hot Tub
	Unvented Hood
	Vented Hood
	Intercom
	Jacuzzi Tub
	Jacuzzi repl.Tub
	Oven
	Microwave
	Standard Range
	Self Clean Range
	Sauna
	Trash Compactor
	Central Vacuum
	Security System

(15) Fireplaces

	Interior 1 Story
	Interior 2 Story
	2nd/Same Stack
	Two Sided
	Exterior 1 Story
	Exterior 2 Story
	Prefab 1 Story
	Prefab 2 Story
	Heat Circulator
	Raised Hearth
	Wood Stove
	Direct-Vented Gas

Class: C
Effec. Age: 25
Floor Area: 2,096
Total Base New : 323,018 E.C.F.
Total Depr Cost: 242,261 X 1.297
Estimated T.C.V: 314,213

(16) Porches/Decks

Area	Type
54	WPP
368	WPP
48	WPP
192	Brzwy, FW

(17) Garage

Year Built:
Car Capacity:
Class: C
Exterior: Siding
Brick Ven.: 0
Stone Ven.: 0
Common Wall: 1 Wall
Foundation: 42 Inch
Finished ?:
Auto. Doors: 0
Mech. Doors: 0
Area: 896
% Good: 0
Storage Area: 0
No Conc. Floor: 0

Bsmnt Garage:

Carport Area:
Roof:

Cost Est. for Res. Bldg: 1 Single Family RANCH Cls C Blt 1999
(11) Heating System: Forced Air w/ Ducts
Ground Area = 2096 SF Floor Area = 2096 SF.
Phy/Ab.Phy/Func/Econ/Comb. % Good=75/100/100/100/75
Building Areas

Stories	Exterior	Foundation	Size	Cost New	Depr. Cost
1 Story	Siding	Crawl Space	1,088		
1 Story	Siding	Crawl Space	1,008		
			Total:	257,375	193,030
Other Additions/Adjustments					
Basement, Outside Entrance, Below Grade			1	2,578	1,933
Water/Sewer					
1000 Gal Septic			1	4,899	3,674
Water Well, 100 Feet			1	5,849	4,387
Porches					
WPP			54	2,185	1,639
WPP			368	6,238	4,678
WPP			48	2,043	1,532
Garages					
Class: C Exterior: Siding Foundation: 42 Inch (Unfinished)					
Base Cost			896	34,209	25,657
Common Wall: 1 Wall			1	-2,705	-2,029
Breezeways					
Frame Wall			192	10,347	7,760
			Totals:	323,018	242,261

Notes:

ECF (RESIDENTIAL) 1.297 => TCV: 314,213

*** Information herein deemed reliable but not guaranteed***

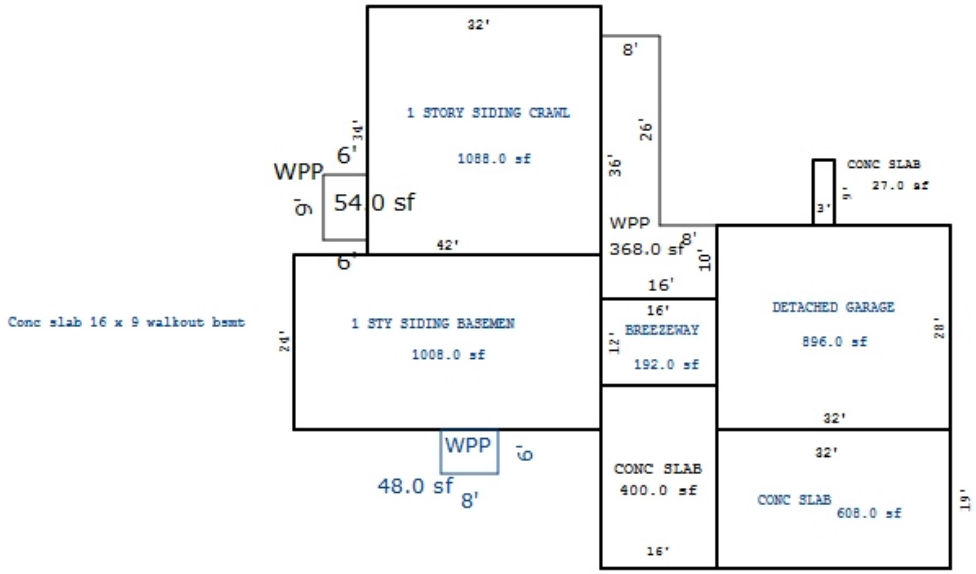

Sketch by Apex Sketch

*** Information herein deemed reliable but not guaranteed***

Parcel Number: 2410-03-2105 Jurisdiction: GREENWOOD TWP County: WEXFORD Printed on 02/15/2024

Grantor	Grantee	Sale Price	Sale Date	Inst. Type	Terms of Sale	Liber & Page	Verified By	Prcnt. Trans.

Property Address

3273 E 2 1/2 RD

Owner's Name/Address

SOUSA, BRIAN
& FAITH M
3273 E 2 1/2 RD
KINGSLEY MI 49649

Tax Description

PAR "A" COM AT W 1/4 COR OF SEC; TH E 1294.70 FT TO POB: N 621.43 FT; E 176.98 FT; S 621.46 FT; W 175.34 FT; TO POB. -2.51 A M/L- GW SEC 3 T24N R10W -KINGSLEY- [[ASSESSED W/03-2102 '98

Comments/Influences

The Equalizer. Copyright (c) 1999 - 2009. Licensed To: Township of Greenwood, County of Wexford, Michigan

Class: RESIDENTIAL-VACANT Zoning:

School: KINGSLEY AREA SCHOOL

P.R.E. 100% / /

:

2024 Est TCV 13,199

	Improved		Vacant
		X	

	Public Improvements
X	Dirt Road
X	Gravel Road
	Paved Road
	Storm Sewer
	Sidewalk
	Water
	Sewer
X	Electric
	Gas
	Curb
	Street Lights
	Standard Utilities
	Underground Utils.

	Topography of Site
	Level
X	Rolling
	Low
	High
	Landscaped
	Swamp
X	Wooded
	Pond
	Waterfront
	Ravine
	Wetland
	Flood Plain

Who	When	What
GLA	10/31/2022	INSPECTION

Building Permit(s)	Date	Number	Status
RESIDENTIAL - NEW	12/13/2005	PM8832	
RESIDENTIAL - REMODEL	11/28/2005	PM8802	
RESIDENTIAL - NEW	12/16/2004	PP3634	
RESIDENTIAL - REMODEL	09/16/2003	PB11857	

Land Value Estimates for Land Table 4010.LAND VALUES

Description	Frontage	Depth	* Factors * Front	Depth	Rate	%Adj.	Reason	Value
ACREAGE			2.380 Acres		5,546	100		13,199
ROW			0.130 Acres		0	100		0
			2.51 Total Acres		Total Est. Land Value =			13,199

Year	Land Value	Building Value	Assessed Value	Board of Review	Tribunal/ Other	Taxable Value
2024	6,600	0	6,600			3,948C
2023	6,500	0	6,500			3,760C
2022	5,400	0	5,400			3,581C
2021	5,200	0	5,200			3,467C

*** Information herein deemed reliable but not guaranteed***

Parcel Number: 2410-03-2201 Jurisdiction: GREENWOOD TWP County: WEXFORD Printed on 02/15/2024

Grantor	Grantee	Sale Price	Sale Date	Inst. Type	Terms of Sale	Liber & Page	Verified By	Prcnt. Trans.
HOOVER, MICHAEL A	HOOVER, MICHAEL A LE	0	05/04/2022	QC	18-LIFE ESTATE	692/2930	DEED	0.0
HOOVER, DONNA JEAN LE ETAL	HOOVER, MARY A (PR)	0	04/07/2022	OTH	08-ESTATE	692/2319	DEED	0.0
HOOVER, DONNA JEAN LE ETAL	HOOVER, DONNA JEAN LE ETAI	0	06/26/2018	QC	18-LIFE ESTATE	682/2903	DEED	0.0
HOOVER, DONNA JEAN	HOOVER, DONNA JEAN LE ETAI	0	06/14/2010	QC	09-FAMILY	631/896	DEED	0.0

Property Address

3196 E COUNTY LINE RD

Owner's Name/Address

HOOVER, DONNA JEAN LE ETAL
2499 FOREST HILL AV SE
GRAND RAPIDS MI 49546-0257

Tax Description

FRL NW 1/4 OF FRL NW 1/4 49.54 A. GW. SEC. 3 T24N R10W -KINGSLEY-

Comments/Influences

Class: RESIDENTIAL-IMPROV Zoning:

School: KINGSLEY AREA SCHOOL

P.R.E. 0%

:

2024 Est TCV 188,935 TCV/TFA: 272.63

Building Permit(s)	Date	Number	Status

X Improved | Vacant

	Public Improvements
	Dirt Road
X	Gravel Road
	Paved Road
	Storm Sewer
	Sidewalk
	Water
	Sewer
X	Electric
	Gas
	Curb
	Street Lights
	Standard Utilities
	Underground Utils.

	Topography of Site
	Level
X	Rolling
	Low
	High
	Landscaped
	Swamp
X	Wooded
	Pond
	Waterfront
	Ravine
	Wetland
	Flood Plain
X	OPEN

Who	When	What
GLA	10/31/2022	INSPECTION
GLA	06/09/2015	INSPECTION

Land Value Estimates for Land Table 4010.LAND VALUES

Description	Frontage	Depth	* Factors * Front	Depth	Rate	%Adj.	Reason	Value
ACREAGE			47.340 Acres		2,722	100		128,859
ROW			2.200 Acres		0	100		0
			49.54 Total Acres		Total Est. Land Value =			128,859

Land Improvement Cost Estimates

Description	Rate	Size	% Good	Cash Value
Wood Frame	25.17	192	42	2,030
Total Estimated Land Improvements True Cash Value =				2,030

Year	Land Value	Building Value	Assessed Value	Board of Review	Tribunal/ Other	Taxable Value
2024	64,400	30,100	94,500			25,500C
2023	65,200	24,400	89,600			24,286C
2022	41,300	20,300	61,600			23,130C
2021	40,200	20,300	60,500			22,392C

The Equalizer. Copyright (c) 1999 - 2009. Licensed To: Township of Greenwood, County of Wexford, Michigan

*** Information herein deemed reliable but not guaranteed***

Building Type

X	Single Family
	Mobile Home
	Town Home
	Duplex
	A-Frame
X	Wood Frame

Building Style: PLAIN

Yr Built	Remodeled
1958	0

Condition: Good

Room List

	Basement
	1st Floor
	2nd Floor
	Bedrooms

(1) Exterior

X	Wood/Shingle
	Aluminum/Vinyl
	Brick
X	Insulation

(2) Windows

	Many		Large
X	Avg.	X	Avg.
	Few		Small

X	Wood Sash
	Metal Sash
	Vinyl Sash
	Double Hung
	Horiz. Slide
	Casement
	Double Glass
	Patio Doors
X	Storms & Screens

(3) Roof

X	Gable		Gambrel
	Hip		Mansard
	Flat		Shed

X	Asphalt Shingle

Chimney:

(3) Roof (cont.)

	Eavestrough
X	Insulation
0	Front Overhang
0	Other Overhang

(4) Interior

	Drywall	X	Plaster
	Paneled		Wood T&G

Trim & Decoration

	Ex	X	Ord		Min

Size of Closets

	Lg	X	Ord		Small

Doors:		Solid	X	H.C.	

(5) Floors

Kitchen:
Other: Linoleum
Other: Carpeted

(6) Ceilings

X	Plaster

(7) Excavation

Basement: 0 S.F.
Crawl: 0 S.F.
Slab: 693 S.F.
Height to Joists: 0.0

(8) Basement

	Conc. Block
	Poured Conc.
	Stone
	Treated Wood
	Concrete Floor

(9) Basement Finish

	Recreation SF
	Living SF
	Walkout Doors (B)
	No Floor SF
	Walkout Doors (A)

(10) Floor Support

Joists:
Unsupported Len:
Cntr.Sup:

(11) Heating/Cooling

X	Gas		Oil		Elec.
	Wood		Coal		Steam

	Forced Air w/o Ducts
X	Forced Air w/ Ducts
	Forced Hot Water
	Electric Baseboard
	Elec. Ceil. Radiant
	Radiant (in-floor)
	Electric Wall Heat
	Space Heater
	Wall/Floor Furnace
	Forced Heat & Cool
	Heat Pump
	No Heating/Cooling

	Central Air
	Wood Furnace

(12) Electric

100	Amps Service

No./Qual. of Fixtures

	Ex.	X	Ord.		Min

No. of Elec. Outlets

	Many	X	Ave.		Few

(13) Plumbing

	Average Fixture(s)
1	3 Fixture Bath
	2 Fixture Bath
	Softener, Auto
	Softener, Manual
	Solar Water Heat
	No Plumbing
	Extra Toilet
	Extra Sink
	Separate Shower
	Ceramic Tile Floor
	Ceramic Tile Wains
	Ceramic Tub Alcove
	Vent Fan

(14) Water/Sewer

	Public Water
	Public Sewer
1	Water Well
1	1000 Gal Septic
	2000 Gal Septic

Lump Sum Items:

(15) Built-ins

	Appliance Allow.
	Cook Top
	Dishwasher
	Garbage Disposal
	Bath Heater
	Vent Fan
	Hot Tub
	Unvented Hood
	Vented Hood
	Intercom
	Jacuzzi Tub
	Jacuzzi repl.Tub
	Oven
	Microwave
	Standard Range
	Self Clean Range
	Sauna
	Trash Compactor
	Central Vacuum
	Security System

(15) Fireplaces

	Interior 1 Story
	Interior 2 Story
	2nd/Same Stack
	Two Sided
	Exterior 1 Story
	Exterior 2 Story
	Prefab 1 Story
	Prefab 2 Story
	Heat Circulator
	Raised Hearth
	Wood Stove
	Direct-Vented Gas

Class: CD
Effec. Age: 65
Floor Area: 693
Total Base New : 99,452 E.C.F.
Total Depr Cost: 44,754 X 1.297
Estimated T.C.V: 58,046

(16) Porches/Decks

Area	Type
32	WGEP (1 Story)
20	WPP

(17) Garage

Year Built:
Car Capacity:
Class:
Exterior:
Brick Ven.:
Stone Ven.:
Common Wall:
Foundation:
Finished ?:
Auto. Doors:
Mech. Doors:
Area:
% Good:
Storage Area:
No Conc. Floor:

Bsmnt Garage:

Carport Area:
Roof:

Cost Est. for Res. Bldg: 1 Single Family PLAIN Cls CD Blt 1958
(11) Heating System: Forced Air w/ Ducts
Ground Area = 693 SF Floor Area = 693 SF.
Phy/Ab.Phy/Func/Econ/Comb. % Good=45/100/100/100/45
Building Areas

Stories	Exterior	Foundation	Size	Cost New	Depr. Cost
1 Story	Siding	Slab	693		
			Total:	83,680	37,656
Other Additions/Adjustments					
Water/Sewer					
1000 Gal Septic			1	4,582	2,062
Water Well, 100 Feet			1	5,680	2,556
Porches					
WGEP (1 Story)			32	4,504	2,027
WPP			20	1,006	453
			Totals:	99,452	44,754

Notes:
ECF (RESIDENTIAL) 1.297 => TCV: 58,046

*** Information herein deemed reliable but not guaranteed***

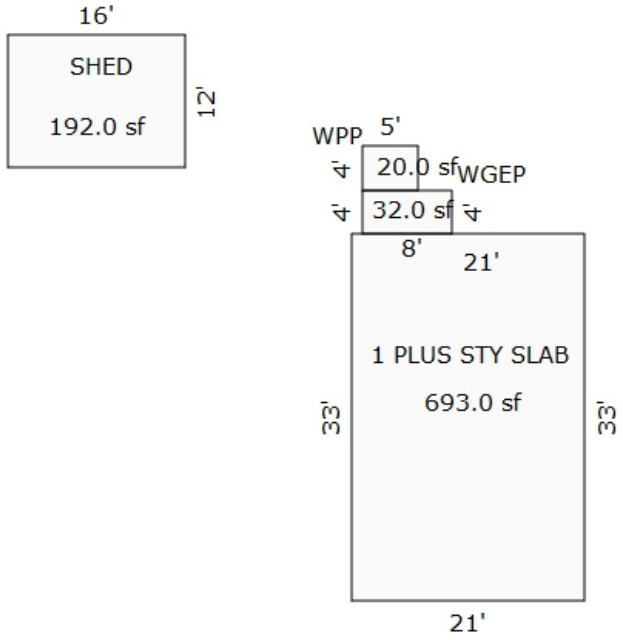

Old Barn 34 x 20 =640 sf N/v

Sketch by Apex Sketch

*** Information herein deemed reliable but not guaranteed***

Parcel Number: 2410-03-2301 Jurisdiction: GREENWOOD TWP County: WEXFORD Printed on 02/15/2024

Grantor	Grantee	Sale Price	Sale Date	Inst. Type	Terms of Sale	Liber & Page	Verified By	Prcnt. Trans.
MUTH, JAMES K.	MUTH, JAMES K LE	0	05/21/2021	WD	18-LIFE ESTATE	690/1092	AGENT	0.0

Property Address

3187 E 2 1/2 RD

Owner's Name/Address

MUTH, JAMES K LE
3187 E 2 1/2 RD
KINGSLEY MI 49649

Tax Description

FRL SW 1/4 OF FRL NW 1/4 EXC N 209 FT OF W 418 FT & EXC COM AT W 1/4 COR OF SEC; E 502.76 FT TO POB: N 557.50 FT; E 406.17 FT; S 103.63 FT; E 385.5 FT TO W 1/8 LN; S 460 FT; W 791.53 FT TO POB. --28.93 A M/L-- GW. SEC. 3 T24N R10W -KINGSLEY-

Comments/Influences

Class: RESIDENTIAL-IMPROV Zoning:

School: KINGSLEY AREA SCHOOL

P.R.E. 100% / /

:

2024 Est TCV 307,675 TCV/TFA: 249.74

Building Permit(s)	Date	Number	Status

X	Improved		Vacant

	Public Improvements
	Dirt Road
X	Gravel Road
	Paved Road
	Storm Sewer
	Sidewalk
	Water
	Sewer
X	Electric
	Gas
	Curb
	Street Lights
	Standard Utilities
	Underground Utils.

	Topography of Site
	Level
X	Rolling
	Low
	High
	Landscaped
	Swamp
X	Wooded
	Pond
	Waterfront
	Ravine
	Wetland
	Flood Plain
X	OPEN

Who	When	What
GLA	10/31/2022	INSPECTION
GLA	06/09/2015	INSPECTION

Land Value Estimates for Land Table 4010.LAND VALUES

Description	Frontage	Depth	* Factors * Front	Depth	Rate	%Adj.	Reason	Value
ACREAGE			27.700 Acres		2,722	100		75,399
ROW			1.230 Acres		0	100		0
			28.93 Total Acres		Total Est. Land Value =			75,399

Land Improvement Cost Estimates

Description	Rate	Size	% Good	Cash Value
D/W/P: 4in Concrete	7.01	940	55	3,624
Total Estimated Land Improvements True Cash Value =				3,624

Year	Land Value	Building Value	Assessed Value	Board of Review	Tribunal/ Other	Taxable Value
2024	37,700	116,100	153,800			81,391C
2023	34,600	94,900	129,500			77,516C
2022	29,700	80,100	109,800			73,825C
2021	26,100	80,800	106,900			71,467C

The Equalizer. Copyright (c) 1999 - 2009. Licensed To: Township of Greenwood, County of Wexford, Michigan

*** Information herein deemed reliable but not guaranteed***

Building Type

X	Single Family
	Mobile Home
	Town Home
	Duplex
	A-Frame
X	Wood Frame

Building Style: PLAIN

Yr Built	Remodeled
0	0

Condition: Good

Room List

	Basement
	1st Floor
	2nd Floor
	Bedrooms

(1) Exterior

	Wood/Shingle
X	Aluminum/Vinyl
	Brick
X	Insulation

(2) Windows

X	Many Avg. Few	X	Large Avg. Small

	Wood Sash
	Metal Sash
X	Vinyl Sash
	Double Hung
	Horiz. Slide
	Casement
	Double Glass
	Patio Doors
X	Storms & Screens

(3) Roof

X	Gable		Gambrel
	Hip		Mansard
	Flat		Shed

X	Asphalt Shingle

Chimney:

(3) Roof (cont.)

	Eavestrough
X	Insulation
0	Front Overhang
0	Other Overhang

(4) Interior

X	Drywall		Plaster
	Paneled		Wood T&G

Trim & Decoration

	Ex	X	Ord		Min

Size of Closets

	Lg	X	Ord		Small

Doors:		Solid	X	H.C.	

(5) Floors

Kitchen:
Other: Linoleum
Other: Carpeted

(6) Ceilings

X	Drywall

(7) Excavation

Basement: 1232 S.F.
Crawl: 0 S.F.
Slab: 0 S.F.
Height to Joists: 0.0

(8) Basement

	Conc. Block
	Poured Conc.
	Stone
	Treated Wood
	Concrete Floor

(9) Basement Finish

	Recreation	SF
	Living	SF
1	Walkout Doors (B)	
	No Floor	SF
	Walkout Doors (A)	

(10) Floor Support

Joists:
Unsupported Len:
Cntr.Sup:

(11) Heating/Cooling

X	Gas		Oil		Elec.
	Wood		Coal		Steam

	Forced Air w/o Ducts
X	Forced Air w/ Ducts
	Forced Hot Water
	Electric Baseboard
	Elec. Ceil. Radiant
	Radiant (in-floor)
	Electric Wall Heat
	Space Heater
	Wall/Floor Furnace
	Forced Heat & Cool
	Heat Pump
	No Heating/Cooling

X	Central Air
	Wood Furnace

(12) Electric

200	Amps Service

No./Qual. of Fixtures

	Ex.	X	Ord.		Min

No. of Elec. Outlets

	Many	X	Ave.		Few

(13) Plumbing

	Average Fixture(s)
2	3 Fixture Bath
	2 Fixture Bath
	Softener, Auto
	Softener, Manual
	Solar Water Heat
	No Plumbing
	Extra Toilet
	Extra Sink
	Separate Shower
	Ceramic Tile Floor
	Ceramic Tile Wains
	Ceramic Tub Alcove
	Vent Fan

(14) Water/Sewer

	Public Water
	Public Sewer
1	Water Well
1	1000 Gal Septic
	2000 Gal Septic

Lump Sum Items:

(15) Built-ins

	Appliance Allow.
	Cook Top
	Dishwasher
	Garbage Disposal
	Bath Heater
	Vent Fan
	Hot Tub
	Unvented Hood
	Vented Hood
	Intercom
	Jacuzzi Tub
	Jacuzzi repl.Tub
	Oven
	Microwave
	Standard Range
	Self Clean Range
	Sauna
	Trash Compactor
	Central Vacuum
	Security System

(15) Fireplaces

	Interior 1 Story
	Interior 2 Story
	2nd/Same Stack
	Two Sided
	Exterior 1 Story
	Exterior 2 Story
	Prefab 1 Story
	Prefab 2 Story
	Heat Circulator
	Raised Hearth
	Wood Stove
	Direct-Vented Gas

Class: CD
Effec. Age: 21
Floor Area: 1,232
Total Base New : 223,153 E.C.F.
Total Depr Cost: 176,293 X 1.297
Estimated T.C.V: 228,652

(16) Porches/Decks

Area	Type
162	WCP (1 Story)
40	WPP
54	Treated Wood

(17) Garage

Year Built:
Car Capacity:
Class: CD
Exterior: Siding
Brick Ven.: 0
Stone Ven.: 0
Common Wall: 1 Wall
Foundation: 42 Inch
Finished ?:
Auto. Doors: 0
Mech. Doors: 0
Area: 784
% Good: 0
Storage Area: 0
No Conc. Floor: 0

Bsmnt Garage:

Carport Area:
Roof:

Cost Est. for Res. Bldg: 1 Single Family PLAIN Cls CD Blt 0
(11) Heating System: Forced Air w/ Ducts , Air Conditioning
Ground Area = 1232 SF Floor Area = 1232 SF.
Phy/Ab.Phy/Func/Econ/Comb. % Good=79/100/100/100/79
Building Areas

Stories	Exterior	Foundation	Size	Cost New	Depr. Cost
1 Story	Siding	Basement	1,232		
			Total:	171,703	135,647
Other Additions/Adjustments					
Basement, Outside Entrance, Below Grade			1	2,176	1,719
Plumbing					
3 Fixture Bath			1	3,887	3,071
Water/Sewer					
1000 Gal Septic			1	4,582	3,620
Water Well, 100 Feet			1	5,680	4,487
Porches					
WCP (1 Story)			162	6,300	4,977
WPP			40	1,720	1,359
Deck					
Treated Wood			54	1,810	1,430
Garages					
Class: CD Exterior: Siding Foundation: 42 Inch (Unfinished)					
Base Cost			784	27,824	21,981
Common Wall: 1 Wall			1	-2,529	-1,998
			Totals:	223,153	176,293

Notes:

ECF (RESIDENTIAL) 1.297 => TCV: 228,652

*** Information herein deemed reliable but not guaranteed***

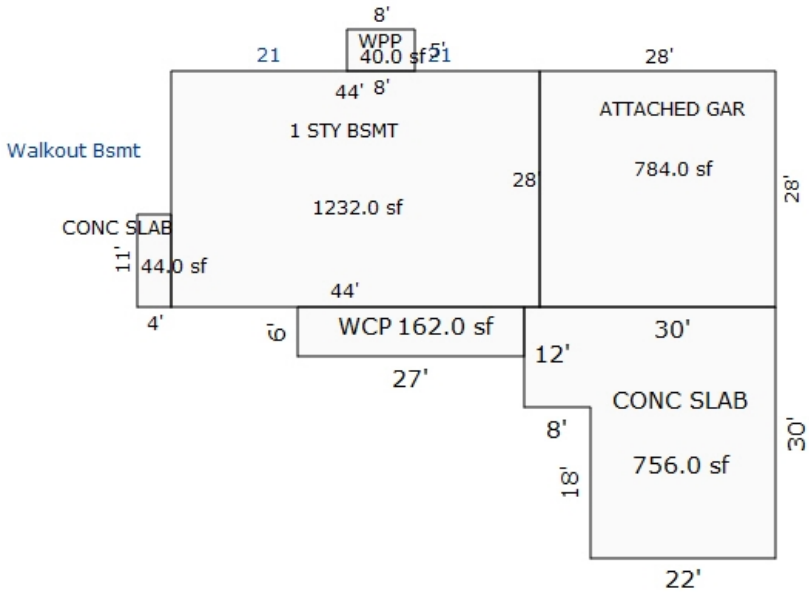

Slab 40x2=80 sf
Slab 2x9=18 sf
Slab 2x21=42 sf

Sketch by Apex Sketch

*** Information herein deemed reliable but not guaranteed***

Parcel Number: 2410-03-2302 Jurisdiction: GREENWOOD TWP County: WEXFORD Printed on 02/15/2024

Grantor	Grantee	Sale Price	Sale Date	Inst. Type	Terms of Sale	Liber & Page	Verified By	Prcnt. Trans.
NEWELL, PATRICK J JUNANITA	NEWELL, EDGAR J. JR.	100	06/21/2022	QC	09-FAMILY	693/1126	DEED	0.0
NEWELL, EDGAR J. JR.	NEWELL, EDGAR J JR & ELIZA	0	06/21/2022	OTH	15-LADY BIRD	693-1127	DEED	0.0

Property Address

11742 N 31 RD

Owner's Name/Address

NEWELL, EDGAR J JR & ELIZABETH L LE
11204 N 31 RD
KINGSLEY MI 49649

Tax Description

N 209 FT OF W 418 FT OF SW 1/4 OF NW 1/4 (ALL FRL) 2 A. M/L- GW. SEC. 3 T24N R10W -KINGSLEY-

Comments/Influences

Class: RESIDENTIAL-IMPROV Zoning:

School: KINGSLEY AREA SCHOOL

P.R.E. 100% / /

:

2024 Est TCV 161,344 TCV/TFA: 144.06

Building Permit(s)	Date	Number	Status

X Improved | Vacant

Public Improvements

	Dirt Road
X	Gravel Road
	Paved Road
	Storm Sewer
	Sidewalk
	Water
	Sewer
X	Electric
	Gas
	Curb
	Street Lights
	Standard Utilities
	Underground Utils.

Topography of Site

	Level
X	Rolling
	Low
X	High
	Landscaped
	Swamp
X	Wooded
	Pond
	Waterfront
	Ravine
	Wetland
	Flood Plain
X	OPEN

Who	When	What
GLA	10/31/2022	INSPECTION
GLA	06/09/2015	INSPECTION

Land Value Estimates for Land Table 4010.LAND VALUES

Description	Frontage	Depth	* Factors * Front	Depth	Rate	%Adj.	Reason	Value
ACREAGE			1.850 Acres		6,861	100		12,693
ROW			0.150 Acres		0	100		0
			2.00 Total Acres		Total Est. Land Value =			12,693

Land Improvement Cost Estimates

Description	Rate	Size	% Good	Cash Value
D/W/P: 4in Concrete	7.01	344	45	1,085
Total Estimated Land Improvements True Cash Value =				1,085

Year	Land Value	Building Value	Assessed Value	Board of Review	Tribunal/ Other	Taxable Value
2024	6,300	74,400	80,700			48,381C
2023	5,200	61,100	66,300			46,078C
2022	4,300	51,900	56,200			43,884C
2021	4,800	52,700	57,500			42,483C

The Equalizer. Copyright (c) 1999 - 2009. Licensed To: Township of Greenwood, County of Wexford, Michigan

*** Information herein deemed reliable but not guaranteed***

Building Type

X	Single Family
	Mobile Home
	Town Home
	Duplex
	A-Frame
X	Wood Frame

Building Style: PLAIN

Yr Built	Remodeled
0	0

Condition: Good

Room List

	Basement
	1st Floor
	2nd Floor
	Bedrooms

(1) Exterior

X	Wood/Shingle
	Aluminum/Vinyl
	Brick
X	Insulation

(2) Windows

X	Many Avg. Few	X	Large Avg. Small

	Wood Sash
	Metal Sash
X	Vinyl Sash
	Double Hung
	Horiz. Slide
	Casement
	Double Glass
	Patio Doors
X	Storms & Screens

(3) Roof

X	Gable Hip Flat		Gambrel Mansard Shed

X	Asphalt Shingle

Chimney:

(3) Roof (cont.)

	Eavestrough
X	Insulation
0	Front Overhang
0	Other Overhang

(4) Interior

X	Drywall Paneled		Plaster Wood T&G

Trim & Decoration

	Ex	X	Ord		Min

Size of Closets

	Lg	X	Ord		Small

Doors:		Solid	X	H.C.	

(5) Floors

Kitchen:
Other: Linoleum
Other: Carpeted

(6) Ceilings

X	Drywall

(7) Excavation

Basement: 1120 S.F.
Crawl: 0 S.F.
Slab: 0 S.F.
Height to Joists: 0.0

(8) Basement

	Conc. Block
	Poured Conc.
	Stone
	Treated Wood
	Concrete Floor

(9) Basement Finish

	Recreation SF
	Living SF
	Walkout Doors (B)
	No Floor SF
	Walkout Doors (A)

(10) Floor Support

Joists:
Unsupported Len:
Cntr.Sup:

(11) Heating/Cooling

X	Gas Wood		Oil Coal		Elec. Steam	

	Forced Air w/o Ducts
X	Forced Air w/ Ducts
	Forced Hot Water
	Electric Baseboard
	Elec. Ceil. Radiant
	Radiant (in-floor)
	Electric Wall Heat
	Space Heater
	Wall/Floor Furnace
	Forced Heat & Cool
	Heat Pump
	No Heating/Cooling

	Central Air
	Wood Furnace

(12) Electric

150	Amps Service

No./Qual. of Fixtures

	Ex.	X	Ord.		Min

No. of Elec. Outlets

	Many	X	Ave.		Few

(13) Plumbing

	Average Fixture(s)
1	3 Fixture Bath
	2 Fixture Bath
	Softener, Auto
	Softener, Manual
	Solar Water Heat
	No Plumbing
	Extra Toilet
	Extra Sink
	Separate Shower
	Ceramic Tile Floor
	Ceramic Tile Wains
	Ceramic Tub Alcove
	Vent Fan

(14) Water/Sewer

	Public Water
	Public Sewer
1	Water Well
1	1000 Gal Septic
	2000 Gal Septic

Lump Sum Items:

(15) Built-ins

	Appliance Allow.
	Cook Top
	Dishwasher
	Garbage Disposal
	Bath Heater
	Vent Fan
	Hot Tub
	Unvented Hood
	Vented Hood
	Intercom
	Jacuzzi Tub
	Jacuzzi repl.Tub
	Oven
	Microwave
	Standard Range
	Self Clean Range
	Sauna
	Trash Compactor
	Central Vacuum
	Security System

(15) Fireplaces

	Interior 1 Story
	Interior 2 Story
	2nd/Same Stack
	Two Sided
	Exterior 1 Story
	Exterior 2 Story
	Prefab 1 Story
	Prefab 2 Story
	Heat Circulator
	Raised Hearth
	Wood Stove
	Direct-Vented Gas

Class: CD
Effec. Age: 48
Floor Area: 1,120
Total Base New : 219,157 E.C.F.
Total Depr Cost: 113,775 X 1.297
Estimated T.C.V: 147,566

(16) Porches/Decks

Area	Type
88	WGEP (1 Story)
110	WPP
150	WPP
190	Treated Wood

(17) Garage

Year Built:
Car Capacity:
Class: CD
Exterior: Pole
Brick Ven.: 0
Stone Ven.: 0
Common Wall: Detache
Foundation: 18 Inch
Finished ?:
Auto. Doors: 0
Mech. Doors: 0
Area: 1800
% Good: 0
Storage Area: 0
No Conc. Floor: 0

Bsmnt Garage:

Carport Area:
Roof:

Cost Est. for Res. Bldg: 1 Single Family PLAIN Cls CD Blt 0
(11) Heating System: Forced Air w/ Ducts
Ground Area = 1120 SF Floor Area = 1120 SF.
Phy/Ab.Phy/Func/Econ/Comb. % Good=52/100/100/100/52
Building Areas

Stories	Exterior	Foundation	Size	Cost New	Depr. Cost	
1 Story	Siding	Basement	1,120			
			Total:	149,503	77,742	
Other Additions/Adjustments						
Water/Sewer						
1000 Gal Septic			1	4,582	2,383	
Water Well, 100 Feet			1	5,680	2,954	
Porches						
WGEP (1 Story)			88	8,180	4,254	
WPP			110	2,783	1,447	
WPP			150	3,470	1,804	
Deck						
Treated Wood			190	3,937	2,047	
Garages						
Class: CD Exterior: Pole (Unfinished)						
Base Cost			1800	39,150	20,358	
Local Cost Items						
SHED			240	1,872	786	*4
			Totals:	219,157	113,775	

Notes:

ECF (RESIDENTIAL) 1.297 => TCV: 147,566

*** Information herein deemed reliable but not guaranteed***

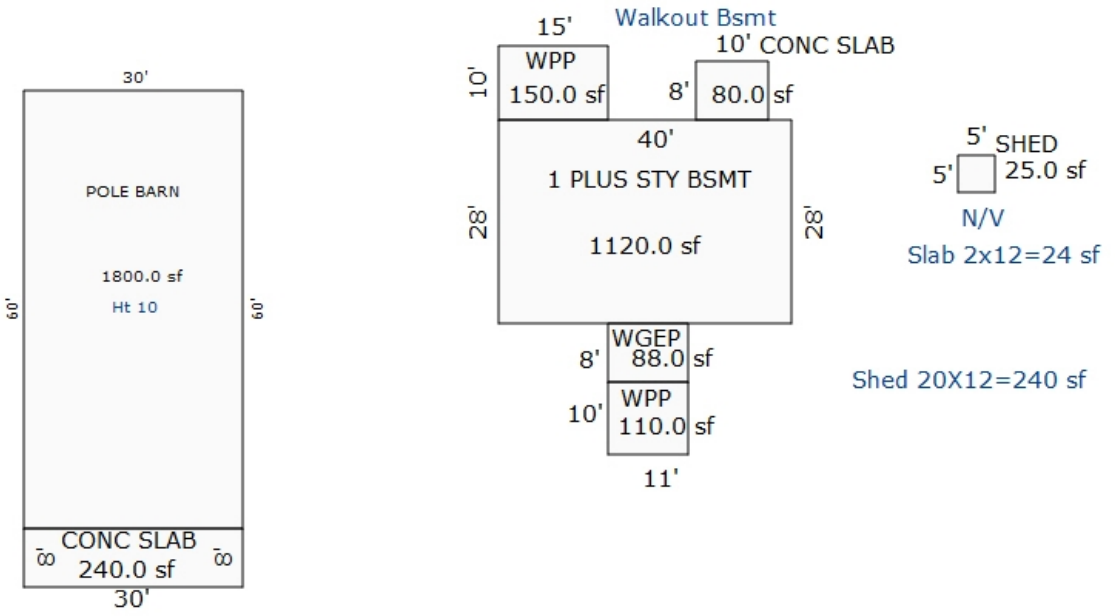

Sketch by Apex Sketch

*** Information herein deemed reliable but not guaranteed***

Parcel Number: 2410-03-2303 Jurisdiction: GREENWOOD TWP County: WEXFORD Printed on 02/15/2024

Grantor	Grantee	Sale Price	Sale Date	Inst. Type	Terms of Sale	Liber & Page	Verified By	Prcnt. Trans.
MUTH, BRIAN K	MUTH, BRIAN K & STACY	0	07/14/2009	QC	09-FAMILY	622/2393	DEED	0.0

Property Address

3181 E 2 1/2 RD

Owner's Name/Address

MUTH, BRIAN K & STACY
3181 E 2 1/2 RD
KINGSLEY MI 49649

Tax Description

PAR A1; COM AT W 1/4 COR OF SEC; E 824.14 FT TO POB: N 50 FT N 36D47M51S E 147.47 FT; N 291.77 FT; E 385.5 FT; S 460 FT; W 470.15 FT TO POB. SUB TO & TOG W/EASMT --4.07 A M/L-- GW SEC 3 T24N R10W -KINGLSEY- [[ASSESSED W/ 03-2301 '02

Comments/Influences

The Equalizer. Copyright (c) 1999 - 2009. Licensed To: Township of Greenwood, County of Wexford, Michigan

Class: RESIDENTIAL-IMPROV Zoning:

School: KINGSLEY AREA SCHOOL

P.R.E. 100% 03/30/2011

:

2024 Est TCV 368,819 TCV/TFA: 199.58

Building Permit(s)	Date	Number	Status
Pole Barn	05/04/2016	PB16- 0000	ENTERED
Res. Single Family	07/14/2009	PE09-18535	
Mechanical	07/13/2009	PM09-10599	
Plumbing	07/13/2009	PP09-4851	

X Improved | Vacant

Public Improvements

- Dirt Road
- X Gravel Road
- Paved Road
- Storm Sewer
- Sidewalk
- Water
- Sewer
- X Electric
- Gas
- Curb
- Street Lights
- Standard Utilities
- Underground Utils.

Topography of Site

- Level
- X Rolling
- Low
- High
- Landscaped
- Swamp
- X Wooded
- Pond
- Waterfront
- Ravine
- Wetland
- Flood Plain
- X OPEN

Who	When	What
GLA	10/31/2022	INSPECTION
GLA	08/15/2015	INSPECTION

Land Value Estimates for Land Table 4010.LAND VALUES

Description	Frontage	Depth	* Factors * Front	Depth	Rate	%Adj.	Reason	Value
ACREAGE			3.720 Acres		5,147	100		19,145
ROW			0.350 Acres		0	100		0
			4.07 Total Acres		Total Est. Land Value =			19,145

Land Improvement Cost Estimates

Description	Rate	Size	% Good	Cash Value
D/W/P: 4in Concrete	7.01	520	59	2,151
Total Estimated Land Improvements True Cash Value =				2,151

Year	Land Value	Building Value	Assessed Value	Board of Review	Tribunal/ Other	Taxable Value
2024	9,600	174,800	184,400			102,907C
2023	8,700	142,700	151,400			98,007C
2022	6,900	120,400	127,300			93,340C
2021	7,800	121,800	129,600			90,359C

*** Information herein deemed reliable but not guaranteed***

Building Type

X	Single Family
	Mobile Home
	Town Home
	Duplex
	A-Frame
X	Wood Frame

Building Style: PLAIN

Yr Built	Remodeled
2009	0

Condition: Good

Room List

	Basement
	1st Floor
	2nd Floor
	Bedrooms

(1) Exterior

	Wood/Shingle
X	Aluminum/Vinyl
	Brick
X	Insulation

(2) Windows

X	Many Avg. Few	X	Large Avg. Small

	Wood Sash
	Metal Sash
X	Vinyl Sash
	Double Hung
	Horiz. Slide
	Casement
	Double Glass
	Patio Doors
X	Storms & Screens

(3) Roof

X	Gable Hip Flat		Gambrel Mansard Shed
X	Asphalt Shingle		

Chimney:

(3) Roof (cont.)

	Eavestrough
X	Insulation
0	Front Overhang
0	Other Overhang

(4) Interior

X	Drywall Paneled		Plaster Wood T&G

Trim & Decoration

	Ex	X	Ord		Min

Size of Closets

	Lg	X	Ord		Small

Doors:		Solid	X	H.C.	

(5) Floors

Kitchen:
Other: Linoleum
Other: Carpeted

(6) Ceilings

X	Drywall

(7) Excavation

Basement: 1232 S.F.
Crawl: 0 S.F.
Slab: 0 S.F.
Height to Joists: 0.0

(8) Basement

	Conc. Block
	Poured Conc.
	Stone
	Treated Wood
	Concrete Floor

(9) Basement Finish

	Recreation	SF
	Living	SF
1	Walkout Doors (B)	
	No Floor	SF
	Walkout Doors (A)	

(10) Floor Support

Joists:
Unsupported Len:
Cntr.Sup:

(11) Heating/Cooling

X	Gas Wood		Oil Coal		Elec. Steam	

	Forced Air w/o Ducts
X	Forced Air w/ Ducts
	Forced Hot Water
	Electric Baseboard
	Elec. Ceil. Radiant
	Radiant (in-floor)
	Electric Wall Heat
	Space Heater
	Wall/Floor Furnace
	Forced Heat & Cool
	Heat Pump
	No Heating/Cooling

X	Central Air
	Wood Furnace

(12) Electric

150	Amps Service

No./Qual. of Fixtures

	Ex.	X	Ord.		Min

No. of Elec. Outlets

	Many	X	Ave.		Few

(13) Plumbing

2	Average Fixture(s)
	3 Fixture Bath
	2 Fixture Bath
	Softener, Auto
	Softener, Manual
	Solar Water Heat
	No Plumbing
	Extra Toilet
	Extra Sink
	Separate Shower
	Ceramic Tile Floor
	Ceramic Tile Wains
	Ceramic Tub Alcove
	Vent Fan

(14) Water/Sewer

	Public Water
	Public Sewer
1	Water Well
1	1000 Gal Septic
	2000 Gal Septic

Lump Sum Items:

(15) Built-ins

	Appliance Allow.
	Cook Top
	Dishwasher
	Garbage Disposal
	Bath Heater
	Vent Fan
	Hot Tub
	Unvented Hood
	Vented Hood
	Intercom
	Jacuzzi Tub
	Jacuzzi repl.Tub
	Oven
	Microwave
	Standard Range
	Self Clean Range
	Sauna
	Trash Compactor
	Central Vacuum
	Security System

(15) Fireplaces

	Interior 1 Story
	Interior 2 Story
	2nd/Same Stack
	Two Sided
	Exterior 1 Story
	Exterior 2 Story
	Prefab 1 Story
1	Prefab 2 Story
	Heat Circulator
	Raised Hearth
	Wood Stove
	Direct-Vented Gas

Class: C
Effec. Age: 15
Floor Area: 1,848
Total Base New : 314,812 E.C.F.
Total Depr Cost: 267,944 X 1.297
Estimated T.C.V: 347,523

(16) Porches/Decks

Area	Type
470	WPP

(17) Garage

Year Built:
Car Capacity:
Class:
Exterior:
Brick Ven.:
Stone Ven.:
Common Wall:
Foundation:
Finished ?:
Auto. Doors:
Mech. Doors:
Area:
% Good:
Storage Area:
No Conc. Floor:

Bsmnt Garage: 1 Car

Carport Area:
Roof:

Cost Est. for Res. Bldg: 1 Single Family PLAIN Cls C Blt 2009
(11) Heating System: Forced Air w/ Ducts , Air Conditioning
Ground Area = 1232 SF Floor Area = 1848 SF.
Phy/Ab.Phy/Func/Econ/Comb. % Good=85/100/100/100/85
Building Areas

Stories	Exterior	Foundation	Size	Cost New	Depr. Cost	
1.5 Story	Siding	Basement	1,232			
			Total:	245,991	209,092	
Other Additions/Adjustments						
Basement, Outside Entrance, Below Grade			1	2,578	2,191	
Plumbing						
3 Fixture Bath			1	4,678	3,976	
Water/Sewer						
1000 Gal Septic			1	4,899	4,164	
Water Well, 100 Feet			1	5,849	4,972	
Porches						
WPP			470	7,943	6,752	
Garages						
Class: C Exterior: Siding Foundation: 42 Inch (Unfinished)						
Basement Garage: 1 Car			1	2,617	2,224	
Class: CD Exterior: Pole (Unfinished)						
Base Cost			1500	32,625	27,731	
Fireplaces						
Prefab 2 Story			1	3,192	2,713	
Local Cost Items						
POLE LEANTO DIRT			1200	4,440	4,129	*9
			Totals:	314,812	267,944	

Notes:
ECF (RESIDENTIAL) 1.297 => TCV: 347,523

*** Information herein deemed reliable but not guaranteed***

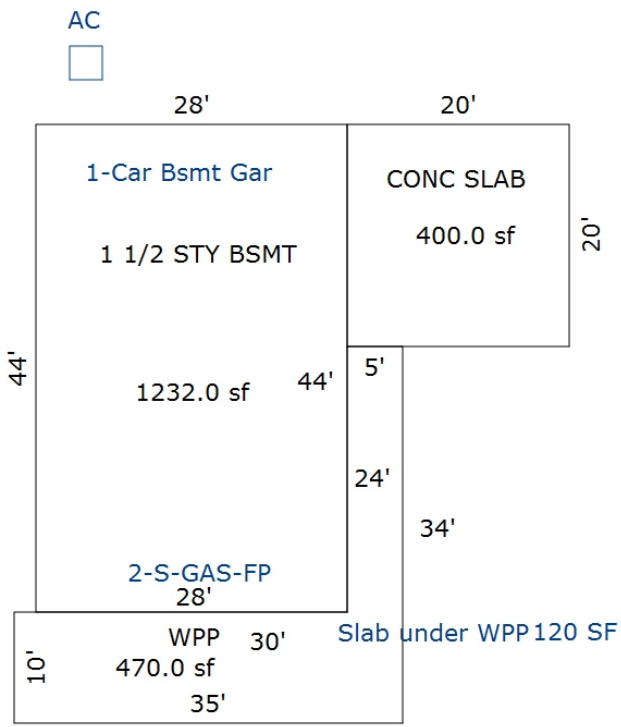

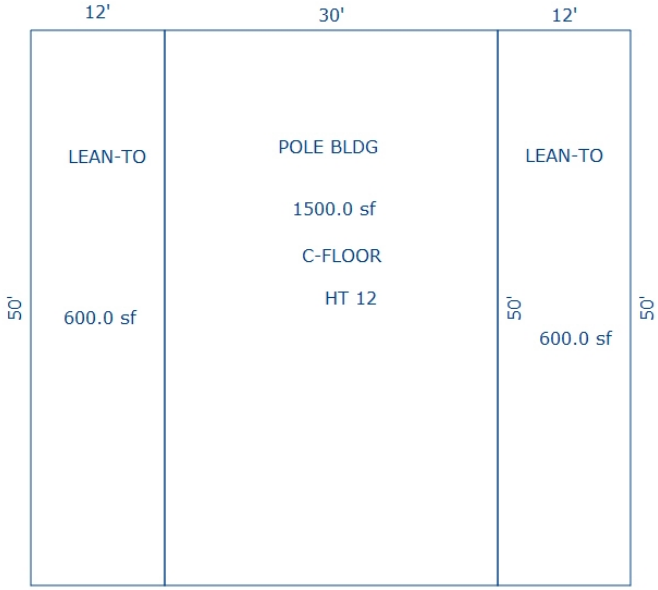

Sketch by Apex Sketch

*** Information herein deemed reliable but not guaranteed***

Parcel Number: 2410-03-2304 Jurisdiction: GREENWOOD TWP County: WEXFORD Printed on 02/15/2024

Grantor	Grantee	Sale Price	Sale Date	Inst. Type	Terms of Sale	Liber & Page	Verified By	Prcnt. Trans.
ROELOFS, JASON D & TONYA D	CIAVATTONE, ALAN & ELAYNE	43,000	05/26/2017	WD	03-ARM'S LENGTH	6801/084	DEED	100.0
JEREMY L THON TRUST U/A/D	ROELOFS, JASON D & TONYA I	40,000	04/14/2016	WD	03-ARM'S LENGTH	677/1655	DEED	100.0
MUTH, JAMES & BARBARA	THON, JEREMY & RENEE	5,000	03/12/2002	WD	03-ARM'S LENGTH	386:813	DEED	0.0

Property Address
3131 E 2 1/2 RD

Owner's Name/Address
CIAVATTONE, ALAN & ELAYNE
3131 E 2 1/2 RD
KINGSLEY MI 49649

Tax Description
COM AT W 1/4 COR OF SEC; E 502.76 FT TO POB: N 557.5 FT; E 406.17 FT; S 395.4 FT; S 36D47M51S W 147.47 FT; S 50 FT; W 321.38 FT TO POB. --5 A M/L-- SUB TO & TOG W/EASMT GW SEC 3 T24N R10W -KINGSLEY- [[ASSESSED W/ 03-2301 '02

Comments/Influences

The Equalizer. Copyright (c) 1999 - 2009.
Licensed To: Township of Greenwood, County of Wexford, Michigan

Class: RESIDENTIAL-IMPROV Zoning:
School: KINGSLEY AREA SCHOOL
P.R.E. 0%
:
2024 Est TCV 295,106 TCV/TFA: 223.57

Building Permit(s)	Date	Number	Status
RESIDENTIAL - NEW	09/03/2020	PB20-0131	ENTERED

X Improved | Vacant

	Public Improvements
	Dirt Road
X	Gravel Road
	Paved Road
	Storm Sewer
	Sidewalk
	Water
	Sewer
X	Electric
	Gas
	Curb
	Street Lights
	Standard Utilities
	Underground Utils.

	Topography of Site
	Level
X	Rolling
	Low
	High
	Landscaped
	Swamp
X	Wooded
	Pond
	Waterfront
	Ravine
	Wetland
	Flood Plain
X	OPEN

Who	When	What
DB	10/23/2023	INSPECTION
GLA	05/13/2021	INSPECTION
GLA	08/15/2015	INSPECTION

Land Value Estimates for Land Table 4010.LAND VALUES

Description	Frontage	Depth	* Factors * Front	Depth	Rate	%Adj.	Reason	Value
ACREAGE			4.760 Acres		5,095	100		24,254
ROW			0.240 Acres		0	100		0
			5.00 Total Acres		Total Est. Land Value =			24,254

Land Improvement Cost Estimates

Description	Rate	Size	% Good	Cash Value
Wood Frame	28.20	120	87	2,944
Total Estimated Land Improvements True Cash Value =				2,944

Year	Land Value	Building Value	Assessed Value	Board of Review	Tribunal/ Other	Taxable Value
2024	12,100	135,500	147,600			121,363C
2023	10,400	50,600	61,000			51,870C
2022	7,400	42,000	49,400			49,400S
2021	8,500	9,400	17,900			16,187C

*** Information herein deemed reliable but not guaranteed***

Building Type

X	Single Family
	Mobile Home
	Town Home
	Duplex
	A-Frame
X	Wood Frame

Building Style: PLAIN

Yr Built	Remodeled
2021	0

Condition: Good

Room List

	Basement
	1st Floor
	2nd Floor
	Bedrooms

(1) Exterior

X	Wood/Shingle
	Aluminum/Vinyl
	Brick
X	Insulation

(2) Windows

X	Many		Large
	Avg.	X	Avg.
	Few		Small

	Wood Sash
	Metal Sash
	Vinyl Sash
	Double Hung
	Horiz. Slide
	Casement
	Double Glass
	Patio Doors
	Storms & Screens

(3) Roof

X	Gable		Gambrel
	Hip		Mansard
	Flat		Shed
X	Asphalt Shingle		

Chimney:

(3) Roof (cont.)

	Eavestrough
X	Insulation
0	Front Overhang
0	Other Overhang

(4) Interior

	Drywall		Plaster
	Paneled		Wood T&G

Trim & Decoration

	Ex	X	Ord		Min

Size of Closets

	Lg	X	Ord		Small

Doors:		Solid	X	H.C.	

(5) Floors

Kitchen:
Other:
Other:

(6) Ceilings

X	Drywall		

(7) Excavation

Basement: 1320 S.F.
Crawl: 0 S.F.
Slab: 0 S.F.
Height to Joists: 0.0

(8) Basement

	Conc. Block
	Poured Conc.
	Stone
	Treated Wood
	Concrete Floor

(9) Basement Finish

	Recreation SF
	Living SF
	Walkout Doors (B)
	No Floor SF
	Walkout Doors (A)

(10) Floor Support

Joists:
Unsupported Len:
Cntr.Sup:

(11) Heating/Cooling

X	Gas		Oil		Elec.
	Wood		Coal		Steam

	Forced Air w/o Ducts
X	Forced Air w/ Ducts
	Forced Hot Water
	Electric Baseboard
	Elec. Ceil. Radiant
	Radiant (in-floor)
	Electric Wall Heat
	Space Heater
	Wall/Floor Furnace
	Forced Heat & Cool
	Heat Pump
	No Heating/Cooling

	Central Air
	Wood Furnace

(12) Electric

0	Amps Service

No./Qual. of Fixtures

	Ex.	X	Ord.		Min

No. of Elec. Outlets

	Many	X	Ave.		Few

(13) Plumbing

1	Average Fixture(s)
	3 Fixture Bath
	2 Fixture Bath
	Softener, Auto
	Softener, Manual
	Solar Water Heat
	No Plumbing
	Extra Toilet
	Extra Sink
	Separate Shower
	Ceramic Tile Floor
	Ceramic Tile Wains
	Ceramic Tub Alcove
	Vent Fan

(14) Water/Sewer

	Public Water
	Public Sewer
1	Water Well
1	1000 Gal Septic
	2000 Gal Septic

Lump Sum Items:

(15) Built-ins

	Appliance Allow.
	Cook Top
	Dishwasher
	Garbage Disposal
	Bath Heater
	Vent Fan
	Hot Tub
	Unvented Hood
	Vented Hood
	Intercom
	Jacuzzi Tub
	Jacuzzi repl.Tub
	Oven
	Microwave
	Standard Range
	Self Clean Range
	Sauna
	Trash Compactor
	Central Vacuum
	Security System

(15) Fireplaces

	Interior 1 Story
	Interior 2 Story
	2nd/Same Stack
	Two Sided
	Exterior 1 Story
	Exterior 2 Story
	Prefab 1 Story
	Prefab 2 Story
	Heat Circulator
	Raised Hearth
	Wood Stove
	Direct-Vented Gas

Class: CD
Effec. Age: 4
Floor Area: 1,320
Total Base New : 215,166 E.C.F.
Total Depr Cost: 206,560 X 1.297
Estimated T.C.V: 267,908

(16) Porches/Decks

Area	Type
144	WCP (1 Story)
20	WCP (1 Story)

(17) Garage

Year Built:
Car Capacity:
Class: CD
Exterior: Pole
Brick Ven.: 0
Stone Ven.: 0
Common Wall: Detache
Foundation: 18 Inch
Finished ?:
Auto. Doors: 0
Mech. Doors: 0
Area: 1200
% Good: 0
Storage Area: 0
No Conc. Floor: 0

Bsmnt Garage:

Carport Area:
Roof:

Cost Est. for Res. Bldg: 1 Single Family PLAIN Cls CD Blt 2021
(11) Heating System: Forced Air w/ Ducts
Ground Area = 1320 SF Floor Area = 1320 SF.
Phy/Ab.Phy/Func/Econ/Comb. % Good=96/100/100/100/96
Building Areas

Stories	Exterior	Foundation	Size	Cost New	Depr. Cost
1 Story	Siding	Basement	1,320		
			Total:	171,604	164,740
Other Additions/Adjustments					
Water/Sewer					
1000 Gal Septic			1	4,582	4,399
Water Well, 100 Feet			1	5,680	5,453
Porches					
WCP (1 Story)			144	5,777	5,546
WCP (1 Story)			20	1,423	1,366
Garages					
Class: CD Exterior: Pole (Unfinished)					
Base Cost			1200	26,100	25,056
			Totals:	215,166	206,560

Notes:
ECF (RESIDENTIAL) 1.297 => TCV: 267,908

*** Information herein deemed reliable but not guaranteed***

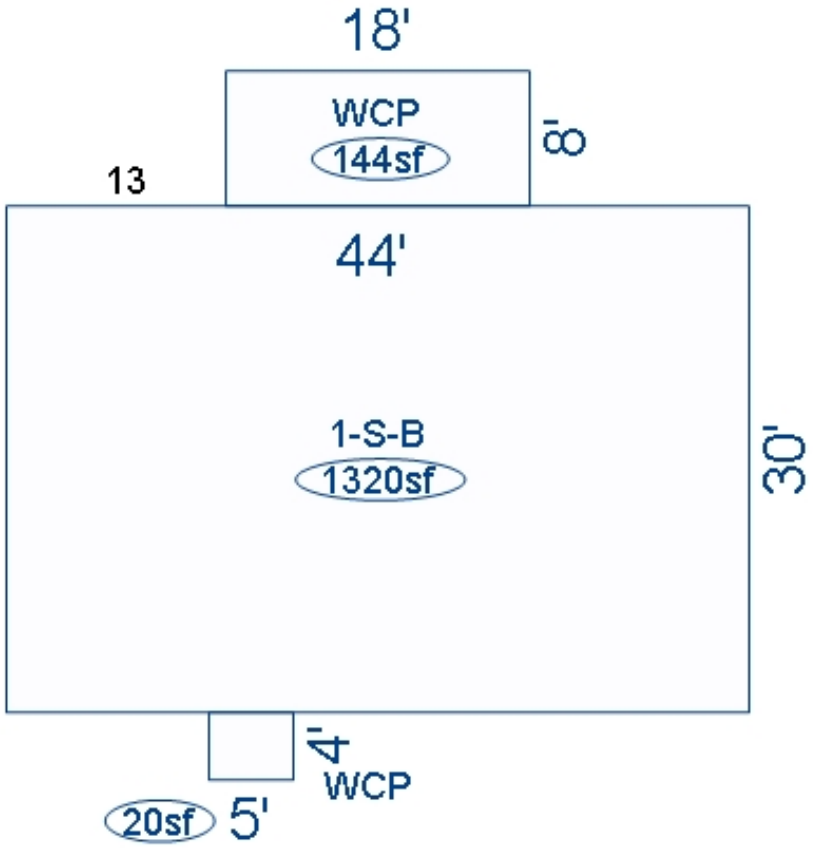

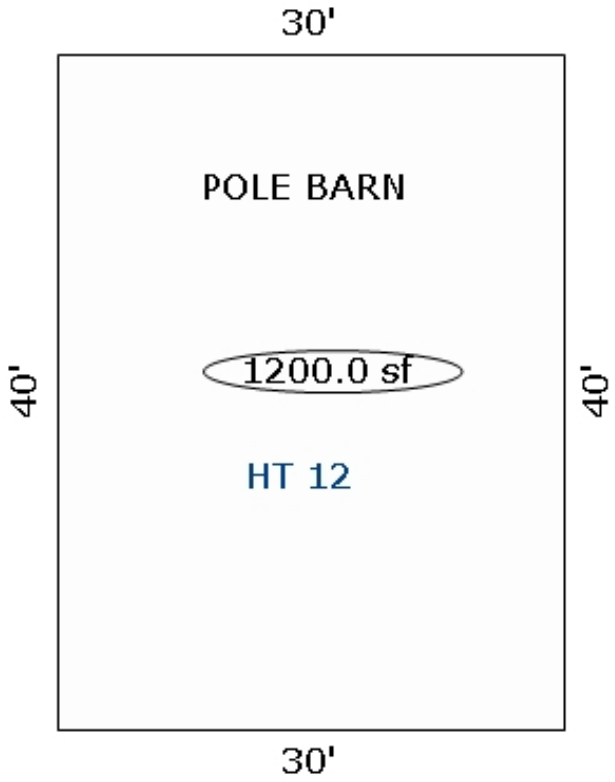

*** Information herein deemed reliable but not guaranteed***

Parcel Number: 2410-03-3101 Jurisdiction: GREENWOOD TWP County: WEXFORD Printed on 02/15/2024

Grantor	Grantee	Sale Price	Sale Date	Inst. Type	Terms of Sale	Liber & Page	Verified By	Prcnt. Trans.

Property Address	Class: RESIDENTIAL-VACANT	Zoning:	Building Permit(s)	Date	Number	Status
	School: KINGSLEY AREA SCHOOL					
Owner's Name/Address	P.R.E. 0%					
	:					
DAYS, LLOYD C ETAL 14383 BOICHOT LANSING MI 48906	2024 Est TCV 106,212					

	Improved	X	Vacant

	Public Improvements
X	Dirt Road
	Gravel Road
	Paved Road
	Storm Sewer
	Sidewalk
	Water
	Sewer
X	Electric
	Gas
	Curb
	Street Lights
	Standard Utilities
	Underground Utils.

	Topography of Site
	Level
X	Rolling
X	Low
	High
	Landscaped
	Swamp
X	Wooded
	Pond
	Waterfront
	Ravine
	Wetland
	Flood Plain
X	OPEN/PINES

Who	When	What
GLA	10/31/2022	INSPECTION
GLA	06/09/2015	INSPECTION

Tax Description

NE 1/4 OF SW 1/4 40 A. GW. SEC. 3 T24N R10W -KINGSLEY-

Comments/Influences

The Equalizer. Copyright (c) 1999 - 2009. Licensed To: Township of Greenwood, County of Wexford, Michigan

Land Value Estimates for Land Table 4010.LAND VALUES

Description	Frontage	Depth	* Factors * Front	Depth	Rate	%Adj.	Reason	Value
ACREAGE			39.020 Acres		2,722	100		106,212
ROW			0.980 Acres		0	100		0
			40.00 Total Acres		Total Est. Land Value =			106,212

Year	Land Value	Building Value	Assessed Value	Board of Review	Tribunal/ Other	Taxable Value
2024	53,100	0	53,100			13,850C
2023	47,000	0	47,000			13,191C
2022	37,400	0	37,400			12,563C
2021	33,300	0	33,300			12,162C

*** Information herein deemed reliable but not guaranteed***

Parcel Number: 2410-03-3102 Jurisdiction: GREENWOOD TWP County: WEXFORD Printed on 02/15/2024

Grantor	Grantee	Sale Price	Sale Date	Inst. Type	Terms of Sale	Liber & Page	Verified By	Prcnt. Trans.
ELLISON, MABLE LE		0	08/06/2014	OTH	07-DEATH CERTIFICATE	694/1585	DEED	0.0
ELLISON, MABLE	ELLISON, MABLE LE ETAL	0	07/10/2009	WD	09-FAMILY	622/2290	DEED	0.0

Property Address

3118 E 2 1/2 RD

Owner's Name/Address

ELLISON, MABLE LE
ROMAN & CRYSTAL M GOODMAN
1404 WICKHAM DR
LANSING MI 48906

Tax Description

NW 1/4 OF SW 1/4 40 A. GW. SEC. 3 T24N R10W -KINGSLEY-

Comments/Influences

Class: RESIDENTIAL-IMPROV Zoning:

School: KINGSLEY AREA SCHOOL

P.R.E. 0%

:

2024 Est TCV 201,268 TCV/TFA: 208.78

Building Permit(s)	Date	Number	Status

X Improved | Vacant

	Public Improvements
	Dirt Road
X	Gravel Road
	Paved Road
	Storm Sewer
	Sidewalk
	Water
	Sewer
X	Electric
	Gas
	Curb
	Street Lights
	Standard Utilities
	Underground Utils.

	Topography of Site
X	Level
X	Rolling
	Low
	High
	Landscaped
	Swamp
X	Wooded
	Pond
	Waterfront
	Ravine
	Wetland
	Flood Plain
X	OPEN

Who	When	What
GLA	05/13/2021	INSPECTION

Land Value Estimates for Land Table 4010.LAND VALUES

Description	Frontage	Depth	* Factors * Front	Depth	Rate	%Adj.	Reason	Value
ACREAGE			39.020 Acres		2,722	100		106,212
ROW			0.980 Acres		0	100		0
			40.00 Total Acres		Total Est. Land Value =			106,212

Land Improvement Cost Estimates

Description	Rate	Size	% Good	Cash Value
D/W/P: 3.5 Concrete	5.82	200	58	675
D/W/P: 3.5 Concrete	5.82	286	58	966
D/W/P: 3.5 Concrete	5.82	144	58	486
Wood Frame	19.65	204	87	3,488
Wood Frame	30.22	48	87	1,262
Total Estimated Land Improvements True Cash Value =				6,877

Year	Land Value	Building Value	Assessed Value	Board of Review	Tribunal/ Other	Taxable Value
2024	53,100	47,500	100,600			28,296C
2023	47,000	38,700	85,700			26,949C
2022	37,400	32,500	69,900			25,666C
2021	33,300	28,800	62,100			24,847C

The Equalizer. Copyright (c) 1999 - 2009. Licensed To: Township of Greenwood, County of Wexford, Michigan

*** Information herein deemed reliable but not guaranteed***

Building Type

X	Single Family
	Mobile Home
	Town Home
	Duplex
	A-Frame
X	Wood Frame

Building Style: FARMHOUSE

Yr Built	Remodeled
0	0

Condition: Good

Room List

	Basement
	1st Floor
	2nd Floor
	Bedrooms

(1) Exterior

	Wood/Shingle
X	Aluminum/Vinyl
	Brick
X	Insulation

(2) Windows

X	Many		Large
	Avg.	X	Avg.
	Few		Small

	Wood Sash
	Metal Sash
X	Vinyl Sash
	Double Hung
	Horiz. Slide
	Casement
	Double Glass
	Patio Doors
X	Storms & Screens

(3) Roof

X	Gable		Gambrel
	Hip		Mansard
	Flat		Shed
X	Asphalt Shingle		

Chimney:

(3) Roof (cont.)

	Eavestrough
X	Insulation
0	Front Overhang
0	Other Overhang

(4) Interior

X	Drywall		Plaster
	Paneled		Wood T&G

Trim & Decoration

	Ex	X	Ord		Min

Size of Closets

	Lg	X	Ord		Small

Doors:		Solid	X	H.C.	

(5) Floors

Kitchen:
Other: Linoleum
Other: Carpeted

(6) Ceilings

X	Drywall

(7) Excavation

Basement: 0 S.F.
Crawl: 771 S.F.
Slab: 0 S.F.
Height to Joists: 0.0

(8) Basement

	Conc. Block
	Poured Conc.
	Stone
	Treated Wood
	Concrete Floor

(9) Basement Finish

	Recreation SF
	Living SF
	Walkout Doors (B)
	No Floor SF
	Walkout Doors (A)

(10) Floor Support

Joists:
Unsupported Len:
Cntr.Sup:

(11) Heating/Cooling

X	Gas		Oil		Elec.
	Wood		Coal		Steam

	Forced Air w/o Ducts
X	Forced Air w/ Ducts
	Forced Hot Water
	Electric Baseboard
	Elec. Ceil. Radiant
	Radiant (in-floor)
	Electric Wall Heat
	Space Heater
	Wall/Floor Furnace
	Forced Heat & Cool
	Heat Pump
	No Heating/Cooling

	Central Air
	Wood Furnace

(12) Electric

150	Amps Service

No./Qual. of Fixtures

	Ex.	X	Ord.		Min

No. of Elec. Outlets

	Many	X	Ave.		Few

(13) Plumbing

	Average Fixture(s)
1	3 Fixture Bath
	2 Fixture Bath
	Softener, Auto
	Softener, Manual
	Solar Water Heat
	No Plumbing
	Extra Toilet
	Extra Sink
	Separate Shower
	Ceramic Tile Floor
	Ceramic Tile Wains
	Ceramic Tub Alcove
	Vent Fan

(14) Water/Sewer

	Public Water
	Public Sewer
1	Water Well
1	1000 Gal Septic
	2000 Gal Septic

Lump Sum Items:

(15) Built-ins

	Appliance Allow.
	Cook Top
	Dishwasher
	Garbage Disposal
	Bath Heater
	Vent Fan
	Hot Tub
	Unvented Hood
	Vented Hood
	Intercom
	Jacuzzi Tub
	Jacuzzi repl.Tub
	Oven
	Microwave
	Standard Range
	Self Clean Range
	Sauna
	Trash Compactor
	Central Vacuum
	Security System

(15) Fireplaces

	Interior 1 Story
	Interior 2 Story
	2nd/Same Stack
	Two Sided
	Exterior 1 Story
	Exterior 2 Story
	Prefab 1 Story
	Prefab 2 Story
	Heat Circulator
	Raised Hearth
	Wood Stove
	Direct-Vented Gas

Class: D
Effec. Age: 65
Floor Area: 964
Total Base New : 151,085 E.C.F.
Total Depr Cost: 67,987 X 1.297
Estimated T.C.V: 88,179

(16) Porches/Decks

Area	Type
192	WGEP (1 Story)
12	CCP (1 Story)
12	CPP
77	Treated Wood
234	Treated Wood

(17) Garage

Year Built:
Car Capacity:
Class: D
Exterior: Pole
Brick Ven.: 0
Stone Ven.: 0
Common Wall: Detache
Foundation: 18 Inch
Finished ?:
Auto. Doors: 0
Mech. Doors: 0
Area: 1040
% Good: 0
Storage Area: 0
No Conc. Floor: 0

Bsmnt Garage:

Carport Area:
Roof:

Cost Est. for Res. Bldg: 1 Single Family FARMHOUSE Cls D Blt 0
(11) Heating System: Forced Air w/ Ducts
Ground Area = 771 SF Floor Area = 964 SF.
Phy/Ab.Phy/Func/Econ/Comb. % Good=45/100/100/100/45
Building Areas

Stories	Exterior	Foundation	Size	Cost New	Depr. Cost
1.25 Story	Siding	Crawl Space	771		
			Total:	101,484	45,667
Other Additions/Adjustments					
Water/Sewer					
1000 Gal Septic			1	4,293	1,932
Water Well, 100 Feet			1	5,545	2,495
Porches					
WGEP (1 Story)			192	12,376	5,569
CCP (1 Story)			12	533	240
CPP			12	302	136
Deck					
Treated Wood			77	2,130	958
Treated Wood			234	4,423	1,990
Garages					
Class: D Exterior: Pole (Unfinished)					
Base Cost			1040	19,999	9,000
			Totals:	151,085	67,987

Notes:
ECF (RESIDENTIAL) 1.297 => TCV: 88,179

*** Information herein deemed reliable but not guaranteed***

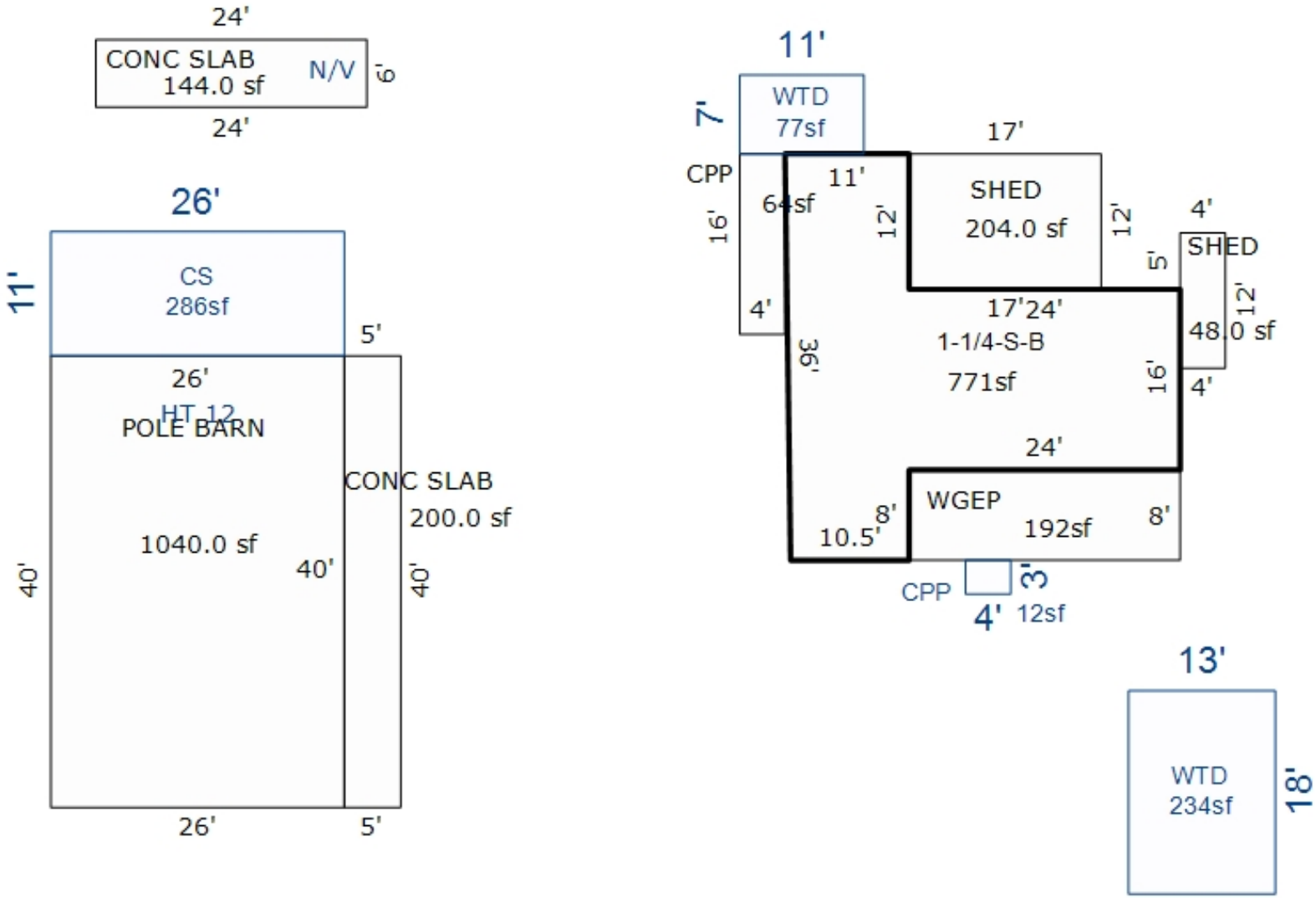

*** Information herein deemed reliable but not guaranteed***

Parcel Number: 2410-03-3301 Jurisdiction: GREENWOOD TWP County: WEXFORD Printed on 02/15/2024

Grantor	Grantee	Sale Price	Sale Date	Inst. Type	Terms of Sale	Liber & Page	Verified By	Prcnt. Trans.
MILAS, RITA C. TRUST	PATTERSON, JOHN & MERLENE	0	04/30/2009	WD	20-MULTI PARCEL SALE REF	620/1725	DEED	100.0
DUNBAR, LEO A.	JAMES E. MILAS TRUST	6,750	07/21/1989	WD	03-ARM'S LENGTH	316:568	DEED	0.0

Property Address

Owner's Name/Address

PATTERSON, JOHN & MERLENE
7033 DEL COMMUNDO CT
LONGMONT CO 80504

Tax Description

S 1/2 OF SW 1/4 EXC COM AT SW COR: N 01D55M E 765.65 FT; S 87D30M E 383.97 FT; N 85D13M E 262.34 FT; N 77D59M E 90.45 FT; N 33.9 FT; N 72D06M50S E 458.63 FT; S 1D17M50S W 951.06 FT TO RIVER; WLY ALONG RIVER BNK TO S SEC LINE; W TO BEG & EXC COM S 1/4 POST; W ON SEC LINE TO RIVER N 41D37M W 118.39 FT; N 80D36M W 36 FT; N 333.17 FT; N 74D14M40S E 142.78 FT; N 17D04M40S E 94.13 FT; N 16D53M10S W 202.5 FT; N 27D27M10S W 339.1 FT; N 72D06M50S E 661.69 FT TO 1/8 LINE; E ON 1/8 LINE TO 1/4 LINE; S TO BEG TOG WITH ACCESS EXC PAR COM AT S 1/4 COR OF SEC, TH W 775.90FT TO N BNK OF MANISTEE RIVER; N 41D27M W 118.39 FT; N 80D36M W 36 FT TO POB: N 80D36M W 86.18 FT; S 80D32M W 195.83 FT; S 71D07M W 80.75 FT; S 68D 42M30S W 91 FT; S 85D05M W 87.75 FT; N 71D19M W 8.85 FT; N 1D17M50S E 951.06 FT TO PT A; TH N 72D06M50S E 458.62 FT; S ***BALANCE OF DESCRIPTION ON FILE***

Comments/Influences

The Equalizer. Copyright (c) 1999 - 2009. Licensed To: Township of Greenwood, County of Wexford, Michigan

Class: RESIDENTIAL-VACANT Zoning:

School: KINGSLEY AREA SCHOOL

P.R.E. 0%

:

2024 Est TCV 54,848

	Improved	X	Vacant

	Public Improvements
	Dirt Road
X	Gravel Road
	Paved Road
	Storm Sewer
	Sidewalk
	Water
	Sewer
X	Electric
	Gas
	Curb
	Street Lights
	Standard Utilities
	Underground Utils.

	Topography of Site
X	Level
X	Rolling
	Low
	High
	Landscaped
	Swamp
X	Wooded
	Pond
	Waterfront
	Ravine
	Wetland
	Flood Plain
X	OPEN

Who	When	What
GLA	10/31/2022	INSPECTION
GLA	05/31/2015	INSPECTION

Building Permit(s)	Date	Number	Status

Land Value Estimates for Land Table 4010.LAND VALUES

Description	Frontage	Depth	* Factors * Front	Depth	Rate	%Adj.	Reason	Value
ACREAGE			17.140 Acres		3,200	100		54,848
			17.14 Total Acres		Total Est. Land Value =			54,848

Year	Land Value	Building Value	Assessed Value	Board of Review	Tribunal/ Other	Taxable Value
2024	27,400	0	27,400			13,974C
2023	22,300	0	22,300			13,309C
2022	19,300	0	19,300			12,676C
2021	18,900	0	18,900			12,272C

*** Information herein deemed reliable but not guaranteed***

Parcel Number: 2410-03-3302 Jurisdiction: GREENWOOD TWP County: WEXFORD Printed on 02/15/2024

Grantor	Grantee	Sale Price	Sale Date	Inst. Type	Terms of Sale	Liber & Page	Verified By	Prcnt. Trans.
VORE, BEAU A	VORE, BEAU & RACHEL TRUST	0	07/22/2022	QC	14-INTO/OUT OF TRUST	694/1738	DEED	0.0
SAGE, CAROL L TRUST	VORE, BEAU A	245,000	06/01/2017	WD	03-ARM'S LENGTH	6801/380	DEED	100.0
SAGE, CAROL L	SAGE, CAROL L TRUST	0	08/08/2011	WD	14-INTO/OUT OF TRUST	641/1509	DEED	0.0
SAGE, EDWIN C III	CERTIFICATE OF DEATH	0	01/26/2008	OTH	21-NOT USED/OTHER	641/827	DEED	0.0

Property Address

11030 N 31 RD

Owner's Name/Address

VORE, BEAU & RACHEL TRUST
11030 N 31 RD
KINGSLEY MI 49649

Tax Description

PAR IN SW 1/4 COM AT SW COR; N 1D55M E 765.47 FT; S 87D38M E 383.90 FT; N 85D12M04S E 93.75 FT TO INT TRAVRSE LINE ALG W BNK OF CREEK; SLY ALG TRAVERSE LINE S 11D06M18S W 89.73 FT; S 68D22M35S W 33.13 FT; S 34D17M08S E 60.25 FT; S 22D31M06S W 52.17 FT; S 71D09M E 46.47 FT; S 29.53 FT; S 39D13M32S W 64.82 FT; S 36D16M27S E 44.72 FT; S 63D28M E 41.45 FT; S22D 36M51S E 23.72 FT; S 50D26M32S E 39.79 FT; S 16D17M03S E 66. 30 FT; S 23D52M43S E 38.81 FT TO TRAVERSE LINE ALG MANISTEE RVR; S 85D30M53S W ALG LINE 103.68 FT; S 7301M44S W ALG LINE 143.41 FT; S 53D07M25S W ALG LINE 117.72 FT; TH DUE W 282.28 FT TO POB.& TOG W/ THOSE LANDS IN SD SEC 3 LAYING BTWN THE DESC INTERMEDIATE TRAVERSE LN & RIGHT BANK OF MANISTEE RIVER & TOG W/ THE LAND LAYING BETWN TRAVERSE LN ALG CREEK AND THE CENTER THREAD OF SD CREEK 8.72 AC M/L GW ***BALANCE OF DESCRIPTION ON FILE***

Comments/Influences

The Equalizer. Copyright (c) 1999 - 2009. Licensed To: Township of Greenwood, County of Wexford, Michigan

Class: RESIDENTIAL-IMPROV Zoning:

School: KINGSLEY AREA SCHOOL

P.R.E. 100% 06/09/2017

:

2024 Est TCV 395,569 TCV/TFA: 164.41

Building Permit(s)	Date	Number	Status

X Improved | Vacant

Public Improvements

	Dirt Road
X	Gravel Road
	Paved Road
	Storm Sewer
	Sidewalk
	Water
	Sewer
X	Electric
	Gas
	Curb
	Street Lights
	Standard Utilities
	Underground Utils.

Topography of Site

X	Level
X	Rolling
	Low
	High
	Landscaped
	Swamp
X	Wooded
	Pond
	Waterfront
	Ravine
	Wetland
	Flood Plain
X	OPEN

Who	When	What
GLA	10/31/2022	INSPECTION
GLA	08/18/2015	INSPECTION

Land Value Estimates for Land Table 4010.LAND VALUES

Description	Frontage	Depth	* Factors * Front	Depth	Rate	%Adj.	Reason	Value
MAN RIV HIGH	363.00	0.00	1.0000	1.0000	315	100		114,345
363 Actual Front Feet, 0.00 Total Acres							Total Est. Land Value =	114,345

Land Improvement Cost Estimates

Description	Rate	Size	% Good	Cash Value
D/W/P: 4in Concrete	7.01	791	55	3,050
D/W/P: 4in Concrete	7.01	764	55	2,946
Total Estimated Land Improvements True Cash Value =				5,996

Year	Land Value	Building Value	Assessed Value	Board of Review	Tribunal/ Other	Taxable Value
2024	57,200	140,600	197,800			125,196C
2023	53,700	115,800	169,500			119,235C
2022	49,000	98,400	147,400			113,558C
2021	36,300	99,800	136,100			109,931C

*** Information herein deemed reliable but not guaranteed***

Building Type

X	Single Family
	Mobile Home
	Town Home
	Duplex
	A-Frame
X	Wood Frame

Building Style: PLAIN

Yr Built	Remodeled
0	0

Condition: Good

Room List

	Basement
	1st Floor
	2nd Floor
	Bedrooms

(1) Exterior

	Wood/Shingle
X	Aluminum/Vinyl
	Brick
X	Insulation

(2) Windows

	Many		Large
X	Avg.	X	Avg.
	Few		Small

	Wood Sash
	Metal Sash
X	Vinyl Sash
	Double Hung
	Horiz. Slide
	Casement
	Double Glass
	Patio Doors
X	Storms & Screens

(3) Roof

X	Gable		Gambrel
	Hip		Mansard
	Flat		Shed

X	Asphalt Shingle

Chimney:

(3) Roof (cont.)

	Eavestrough
X	Insulation
0	Front Overhang
0	Other Overhang

(4) Interior

X	Drywall		Plaster
	Paneled		Wood T&G

Trim & Decoration

	Ex	X	Ord		Min

Size of Closets

	Lg	X	Ord		Small

Doors:		Solid	X	H.C.	

(5) Floors

Kitchen:
Other: Linoleum
Other: Carpeted

(6) Ceilings

X	Drywall		

(7) Excavation

Basement: 999 S.F.
Crawl: 0 S.F.
Slab: 384 S.F.
Height to Joists: 0.0

(8) Basement

	Conc. Block
	Poured Conc.
	Stone
	Treated Wood
	Concrete Floor

(9) Basement Finish

	Recreation SF
	Living SF
	Walkout Doors (B)
	No Floor SF
	Walkout Doors (A)

(10) Floor Support

Joists:
Unsupported Len:
Cntr.Sup:

(11) Heating/Cooling

X	Gas		Oil		Elec.
	Wood		Coal		Steam

	Forced Air w/o Ducts
X	Forced Air w/ Ducts
	Forced Hot Water
	Electric Baseboard
	Elec. Ceil. Radiant
	Radiant (in-floor)
	Electric Wall Heat
	Space Heater
	Wall/Floor Furnace
	Forced Heat & Cool
	Heat Pump
	No Heating/Cooling
	Central Air
	Wood Furnace

(12) Electric

150	Amps Service

No./Qual. of Fixtures

	Ex.	X	Ord.		Min

No. of Elec. Outlets

	Many	X	Ave.		Few

(13) Plumbing

3	Average Fixture(s)
	3 Fixture Bath
	2 Fixture Bath
	Softener, Auto
	Softener, Manual
	Solar Water Heat
	No Plumbing
	Extra Toilet
	Extra Sink
	Separate Shower
	Ceramic Tile Floor
	Ceramic Tile Wains
	Ceramic Tub Alcove
	Vent Fan

(14) Water/Sewer

	Public Water
	Public Sewer
1	Water Well
1	1000 Gal Septic
	2000 Gal Septic

Lump Sum Items:

(15) Built-ins

	Appliance Allow.
	Cook Top
	Dishwasher
	Garbage Disposal
	Bath Heater
	Vent Fan
	Hot Tub
	Unvented Hood
	Vented Hood
	Intercom
	Jacuzzi Tub
	Jacuzzi repl.Tub
	Oven
	Microwave
	Standard Range
	Self Clean Range
	Sauna
	Trash Compactor
	Central Vacuum
	Security System

(15) Fireplaces

	Interior 1 Story
	Interior 2 Story
	2nd/Same Stack
	Two Sided
	Exterior 1 Story
	Exterior 2 Story
	Prefab 1 Story
	Prefab 2 Story
	Heat Circulator
	Raised Hearth
	Wood Stove
	Direct-Vented Gas

Class: C
Effec. Age: 48
Floor Area: 2,406
Total Base New : 408,081 E.C.F.
Total Depr Cost: 212,203 X 1.297
Estimated T.C.V: 275,228

(16) Porches/Decks

Area	Type
154	CCP (1 Story)
414	WPP
112	WGEP (1 Story)
180	CCP (1 Story)
100	WCP (1 Story)

(17) Garage

Year Built:
Car Capacity:
Class: C
Exterior: Siding
Brick Ven.: 0
Stone Ven.: 0
Common Wall: 1 Wall
Foundation: 42 Inch
Finished ?:
Auto. Doors: 0
Mech. Doors: 0
Area: 528
% Good: 0
Storage Area: 0
No Conc. Floor: 0

Bsmnt Garage:

Carport Area:
Roof:

Cost Est. for Res. Bldg: 1 Single Family PLAIN Cls C Blt 0
(11) Heating System: Forced Air w/ Ducts
Ground Area = 1383 SF Floor Area = 2406 SF.
Phy/Ab.Phy/Func/Econ/Comb. % Good=52/100/100/100/52
Building Areas

Stories	Exterior	Foundation	Size	Cost New	Depr. Cost
2 Story	Siding	Basement	999		
1 Story	Siding	Slab	384		
1 Story	Siding	Overhang	24		
			Total:	282,690	147,000

Other Additions/Adjustments			
Plumbing			
3 Fixture Bath	2	9,357	4,866
Water/Sewer			
1000 Gal Septic	1	4,899	2,547
Water Well, 100 Feet	1	5,849	3,041
Porches			
CCP (1 Story)	154	4,203	2,186
WPP	414	7,009	3,645
WGEP (1 Story)	112	10,544	5,483
CCP (1 Story)	180	4,831	2,512
WCP (1 Story)	100	4,782	2,487
Garages			
Class: C Exterior: Siding Foundation: 42 Inch (Unfinished)			
Base Cost	528	23,565	12,254
Common Wall: 1 Wall	1	-2,705	-1,407
Class: C Exterior: Siding Foundation: 42 Inch (Unfinished)			
Base Cost	480	22,094	11,489
Common Wall: 1 Wall	1	-2,705	-1,407
No Concrete Floor	632	-4,228	-2,199

<<<<< Calculations too long. See Valuation printout for complete pricing. >>>>>

*** Information herein deemed reliable but not guaranteed***

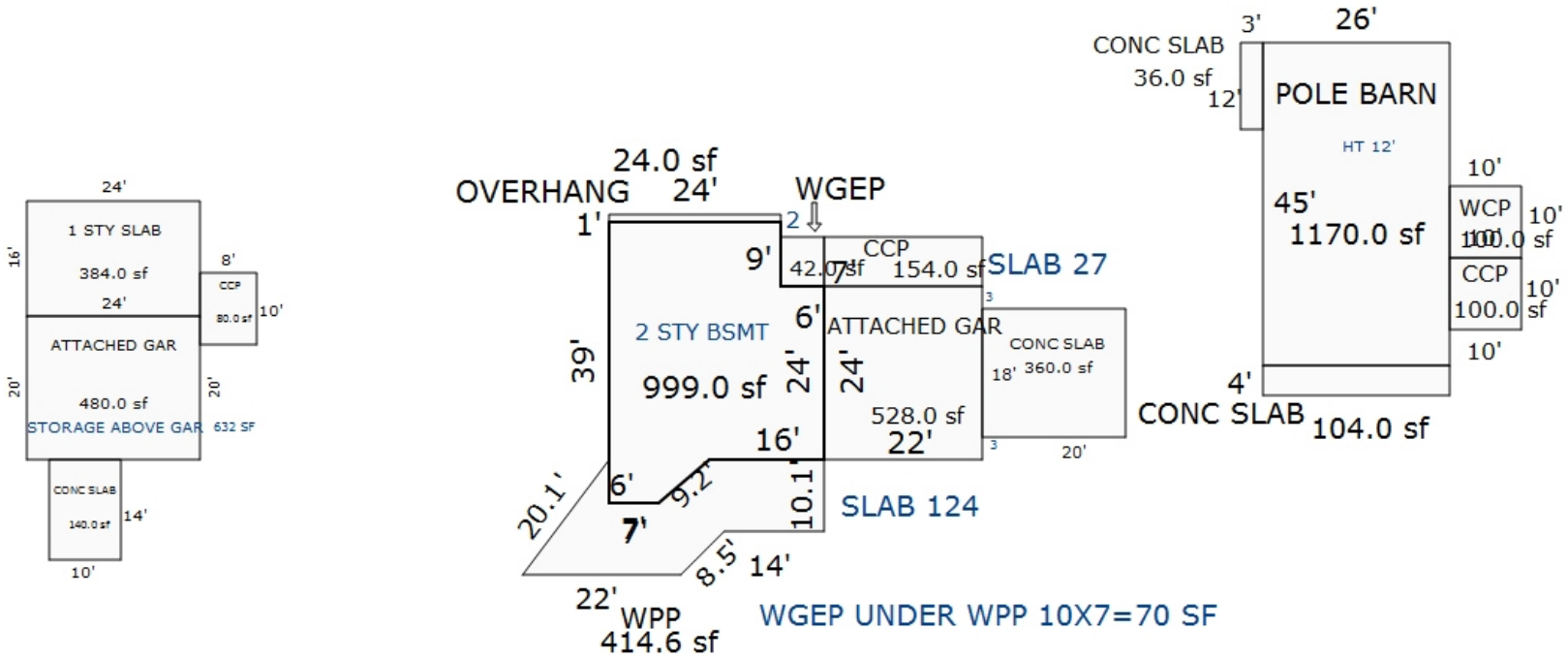

Sketch by Apex Sketch

*** Information herein deemed reliable but not guaranteed***

Parcel Number: 2410-03-3303 Jurisdiction: GREENWOOD TWP County: WEXFORD Printed on 02/15/2024

Grantor	Grantee	Sale Price	Sale Date	Inst. Type	Terms of Sale	Liber & Page	Verified By	Prcnt. Trans.
ESTATE OF BRADLEY NICKERSO	NICKERSON, SEAN	100	04/24/2018	QC	09-FAMILY	682/1959	DEED	0.0
ROLAND, MAY & NICKERSON DO	NICKERSON, BRADLEY ESTATE	0	04/13/2018	WD	21-NOT USED/OTHER		DEED	0.0
NICKERSON, BRADLEY ESTATE	NICKERSON, SEAN & HOLLY	0	04/13/2018	QC	06-COURT JUDGEMENT	6821/580	DEED	0.0
NICKERSON, PAMELA S	NICKERSON, PAMELA S & SEAN	0	02/05/2018	QC	21-NOT USED/OTHER	681 /2926	DEED	0.0

Property Address

11044 N 31 RD

Owner's Name/Address

NICKERSON, SEAN & HOLLY
11044 N 31 RD
KINGSLEY MI 49649

Tax Description

COM AT S 1/4-POST; W ON SEC LINE TO RIVER; WLY ON N BANK OF RIVER 704.75 FT TO POB: NWLY ALONG RIVER 550.36 FT; N 9D32M E 339.59 FT; N 85D44M E 53.49 FT; N 1D19M E 362.37 FT; N 72D 06M50S E 458.63 FT; S TO BEG. SUB TO CONSUMERS POWER ESMNT, L264, PG986, 76 --8.68 A M/L-- GW. SEC. 3 T24N R10W -KINGSLEY-

Comments/Influences

The Equalizer. Copyright (c) 1999 - 2009.
Licensed To: Township of Greenwood, County of Wexford, Michigan

Class: RESIDENTIAL-IMPROV Zoning:

School: KINGSLEY AREA SCHOOL

P.R.E. 100% 01/16/2020

:

2024 Est TCV 456,456 TCV/TFA: 394.86

Building Permit(s)	Date	Number	Status
RESIDENTIAL - NEW	07/25/2018	PB18-0133	COMPLETE
RESIDENTIAL - NEW	04/20/2005	PB12664	

X	Improved		Vacant

Public Improvements

X	Dirt Road
X	Gravel Road
	Paved Road
	Storm Sewer
	Sidewalk
	Water
	Sewer
X	Electric
	Gas
	Curb
	Street Lights
	Standard Utilities
	Underground Utils.

Topography of Site

	Level
X	Rolling
	Low
	High
	Landscaped
	Swamp
X	Wooded
	Pond
	Waterfront
	Ravine
	Wetland
	Flood Plain
X	OPEN

Who	When	What
GLA	10/31/2022	INSPECTION
GLA	06/11/2015	INSPECTION

Land Value Estimates for Land Table 4010.LAND VALUES

Description	Frontage	Depth	* Factors * Front	Depth	Rate	%Adj.	Reason	Value
MAN RIV HIGH	519.00	0.00	1.0000	1.0000	315	100		163,485
519 Actual Front Feet, 0.00 Total Acres							Total Est. Land Value =	163,485

Land Improvement Cost Estimates

Description	Rate	Size	% Good	Cash Value
D/W/P: 3.5 Concrete	6.63	48	38	121
Wood Frame	32.53	80	18	468
Metal Prefab	24.37	48	18	211
Total Estimated Land Improvements True Cash Value =				800

Year	Land Value	Building Value	Assessed Value	Board of Review	Tribunal/ Other	Taxable Value
2024	81,700	146,500	228,200			164,211C
2023	76,800	119,400	196,200			156,392C
2022	70,100	100,500	170,600			148,945C
2021	51,900	101,500	153,400			144,187C

*** Information herein deemed reliable but not guaranteed***

Building Type

X	Single Family
	Mobile Home
	Town Home
	Duplex
	A-Frame
X	Wood Frame

Building Style: PLAIN

Yr Built	Remodeled
2019	0

Condition: Fair

Room List

2	Basement
2	1st Floor
	2nd Floor
2	Bedrooms

(1) Exterior

X	Wood/Shingle
	Aluminum/Vinyl
	Brick
	Insulation

(2) Windows

X	Many Avg. Few	X	Large Avg. Small

X	Wood Sash
	Metal Sash
	Vinyl Sash
	Double Hung
X	Horiz. Slide
	Casement
	Double Glass
	Patio Doors
X	Storms & Screens

(3) Roof

X	Gable		Gambrel
	Hip		Mansard
	Flat		Shed

X	Asphalt Shingle

Chimney: Brick

(3) Roof (cont.)

	Eavestrough
	Insulation
0	Front Overhang
0	Other Overhang

(4) Interior

	Drywall		Plaster
	Paneled		Wood T&G

Trim & Decoration

	Ex		Ord		Min

Size of Closets

	Lg		Ord		Small

Doors:		Solid		H.C.	

(5) Floors

Kitchen:
Other:
Other:

(6) Ceilings

(7) Excavation

Basement: 1156 S.F.
Crawl: 0 S.F.
Slab: 0 S.F.
Height to Joists: 0.0

(8) Basement

	Conc. Block
	Poured Conc.
	Stone
	Treated Wood
	Concrete Floor

(9) Basement Finish

	Recreation	SF
	Living	SF
1	Walkout Doors (B)	
	No Floor	SF
	Walkout Doors (A)	

(10) Floor Support

Joists:
Unsupported Len:
Cntr.Sup:

(11) Heating/Cooling

X	Gas		Oil		Elec.
	Wood		Coal		Steam

	Forced Air w/o Ducts
X	Forced Air w/ Ducts
	Forced Hot Water
	Electric Baseboard
	Elec. Ceil. Radiant
	Radiant (in-floor)
	Electric Wall Heat
	Space Heater
	Wall/Floor Furnace
	Forced Heat & Cool
	Heat Pump
	No Heating/Cooling

	Central Air
	Wood Furnace

(12) Electric

0	Amps Service

No./Qual. of Fixtures

	Ex.		Ord.		Min

No. of Elec. Outlets

	Many		Ave.		Few

(13) Plumbing

	Average Fixture(s)
2	3 Fixture Bath
	2 Fixture Bath
	Softener, Auto
	Softener, Manual
	Solar Water Heat
	No Plumbing
	Extra Toilet
	Extra Sink
	Separate Shower
	Ceramic Tile Floor
	Ceramic Tile Wains
	Ceramic Tub Alcove
	Vent Fan

(14) Water/Sewer

	Public Water
	Public Sewer
1	Water Well
1	1000 Gal Septic
	2000 Gal Septic

Lump Sum Items:

(15) Built-ins

	Appliance Allow.
	Cook Top
	Dishwasher
	Garbage Disposal
	Bath Heater
	Vent Fan
	Hot Tub
	Unvented Hood
	Vented Hood
	Intercom
	Jacuzzi Tub
	Jacuzzi repl.Tub
	Oven
	Microwave
	Standard Range
	Self Clean Range
	Sauna
	Trash Compactor
	Central Vacuum
	Security System

(15) Fireplaces

	Interior 1 Story
	Interior 2 Story
	2nd/Same Stack
	Two Sided
	Exterior 1 Story
	Exterior 2 Story
	Prefab 1 Story
	Prefab 2 Story
	Heat Circulator
	Raised Hearth
	Wood Stove
	Direct-Vented Gas

Class: C
Effec. Age: 5
Floor Area: 1,156
Total Base New : 260,028 E.C.F.
Total Depr Cost: 225,267 X 1.297
Estimated T.C.V: 292,171

(16) Porches/Decks

Area	Type
442	WPP
72	WPP

(17) Garage

Year Built: 1978
Car Capacity:
Class: C
Exterior: Siding
Brick Ven.: 0
Stone Ven.: 0
Common Wall: Detache
Foundation: 18 Inch
Finished ?:
Auto. Doors: 0
Mech. Doors: 0
Area: 1008
% Good: 58
Storage Area: 0
No Conc. Floor: 0

Bsmnt Garage:

Carport Area:
Roof:

Cost Est. for Res. Bldg: 1 Single Family PLAIN Cls C Blt 2019
(11) Heating System: Forced Air w/ Ducts
Ground Area = 1156 SF Floor Area = 1156 SF.
Phy/Ab.Phy/Func/Econ/Comb. % Good=95/100/100/100/95
Building Areas

Stories	Exterior	Foundation	Size	Cost New	Depr. Cost	
1 Story	Siding	Basement	1,156			
			Total:	173,705	165,018	
Other Additions/Adjustments						
Basement, Outside Entrance, Below Grade			1	2,578	2,449	
Plumbing						
3 Fixture Bath			1	4,678	4,444	
Water/Sewer						
1000 Gal Septic			1	4,899	4,654	
Water Well, 100 Feet			1	5,849	5,557	
Porches						
WPP			442	7,474	7,100	
WPP			72	2,586	2,457	
Garages						
Class: C Exterior: Siding Foundation: 18 Inch (Unfinished)						
Base Cost			1008	33,919	19,673	*5
Class: D Exterior: Pole (Unfinished)						
Base Cost			1200	23,076	13,384	*5
Local Cost Items						
SHED			162	1,264	531	*4
			Totals:	260,028	225,267	

Notes:

ECF (RESIDENTIAL) 1.297 => TCV: 292,171

*** Information herein deemed reliable but not guaranteed***

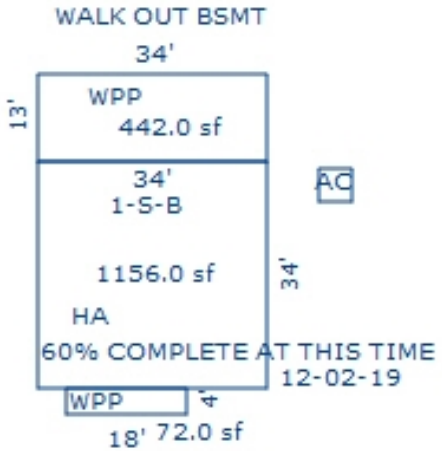

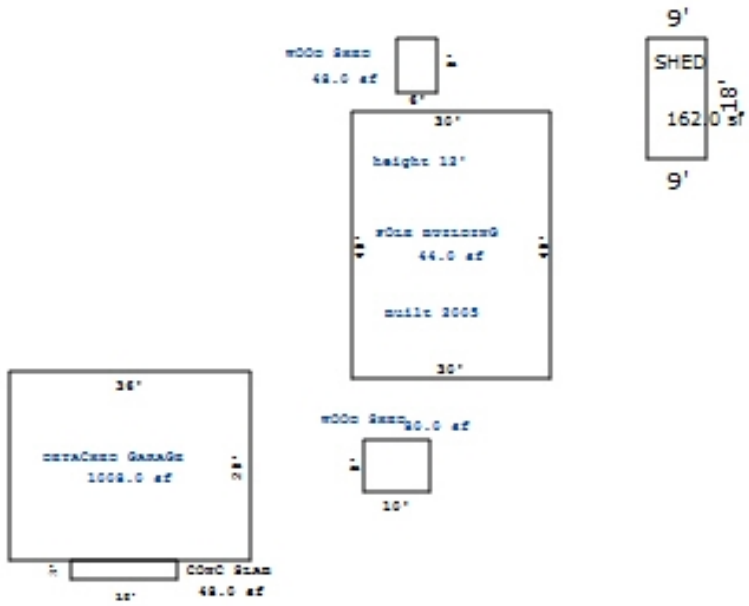

Sketch by Apex Sketch

*** Information herein deemed reliable but not guaranteed***

Parcel Number: 2410-03-3304 Jurisdiction: GREENWOOD TWP County: WEXFORD Printed on 02/15/2024

Grantor	Grantee	Sale Price	Sale Date	Inst. Type	Terms of Sale	Liber & Page	Verified By	Prcnt. Trans.
MILAS, RITA C.TRUST	PATTERSON, JOHN & MERLENE	407,000	04/30/2009	WD	19-MULTI PARCEL ARM'S LEN	620/1725	DEED	100.0

Property Address

11036 N 31 RD

Owner's Name/Address

PATTERSON, JOHN & MERLENE
7033 DEL COMMUNDO CT
LONGMONT CO 80504

Class: RESIDENTIAL-IMPROV Zoning:

School: KINGSLEY AREA SCHOOL

P.R.E. 0%

:

2024 Est TCV 597,782 TCV/TFA: 256.01

Building Permit(s)	Date	Number	Status
RESIDENTIAL - NEW	07/28/2005	PM8529	
RESIDENTIAL - REMODEL	07/21/2005	PM8516	

X Improved | Vacant

Tax Description

PAR COM AT S 1/4 COR OF SEC, TH W 775.90 FT TO N BANK OF MANISTEE RVR; N 41D37M W 118.39 FT; N 80D36M W 36 FT TO POB: N 80D36M W 86.18 FT; S 80D32M W 195.83 FT; S 71D07M W 80.75 FT; S 68D42M30S W 91 FT; S 85D05M W 87.75 FT; N 71D19M W 8.85 FT; N 1D17M50S E 951.06 FT TO PT A; N 72D06M50S E 458.62 FT; S 27D17M10S E 399.10 FT; S 16D53M10S E 202.50 FT; S 17D04M40S W 94.13 FT; S 74D14M40S W 142.78 FT TO PT B; S 333.17 FT TO POB. TOG WITH ACCESS EASEMTS & RIPARION RIGHTS BEING A PART OF S 1/2 OF SW 1/4 --12.94

The Equalizer. Copyright (c) 1999 - 2009.
Licensed To: Township of Greenwood, County of Wexford, Michigan

Public Improvements

	Dirt Road
X	Gravel Road
	Paved Road
	Storm Sewer
	Sidewalk
	Water
	Sewer
X	Electric
	Gas
	Curb
	Street Lights
	Standard Utilities
	Underground Utils.

Topography of Site

X	Level
X	Rolling
	Low
	High
	Landscaped
	Swamp
X	Wooded
	Pond
	Waterfront
	Ravine
	Wetland
	Flood Plain
X	OPEN

Who	When	What
GLA	10/31/2022	INSPECTION
GLA	06/09/2015	INSPECTION

Land Value Estimates for Land Table 4010.LAND VALUES

Description	Frontage	Depth	* Factors * Front	Depth	Rate	%Adj.	Reason	Value
MAN RIV HIGH	550.00	0.00	1.0000	1.0000	315	100		173,250
550 Actual Front Feet, 0.00 Total Acres							Total Est. Land Value =	173,250

Land Improvement Cost Estimates

Description	Rate	Size	% Good	Cash Value
D/W/P: 3.5 Concrete	6.63	638	68	2,876
Wood Frame	22.73	600	68	9,274
Total Estimated Land Improvements True Cash Value =				12,150

Year	Land Value	Building Value	Assessed Value	Board of Review	Tribunal/ Other	Taxable Value
2024	86,600	212,300	298,900			183,156C
2023	81,400	174,100	255,500			174,435C
2022	74,300	161,000	235,300			166,129C
2021	55,000	163,100	218,100			160,822C

*** Information herein deemed reliable but not guaranteed***

Building Type

X	Single Family
	Mobile Home
	Town Home
	Duplex
	A-Frame
X	Wood Frame

Building Style: PLAIN

Yr Built	Remodeled
1982	2000

Condition: Good

Room List

	Basement
	1st Floor
	2nd Floor
	Bedrooms

(1) Exterior

X	Wood/Shingle
	Aluminum/Vinyl
	Brick
X	Insulation

(2) Windows

X	Many		Large
	Avg.	X	Avg.
	Few		Small

	Wood Sash
	Metal Sash
X	Vinyl Sash
	Double Hung
	Horiz. Slide
	Casement
	Double Glass
	Patio Doors
X	Storms & Screens

(3) Roof

X	Gable		Gambrel
	Hip		Mansard
	Flat		Shed

X	Asphalt Shingle

Chimney:

(3) Roof (cont.)

	Eavestrough
X	Insulation
0	Front Overhang
0	Other Overhang

(4) Interior

X	Drywall		Plaster
	Paneled		Wood T&G

Trim & Decoration

	Ex	X	Ord		Min

Size of Closets

	Lg	X	Ord		Small

Doors:		Solid	X	H.C.	

(5) Floors

Kitchen:
Other: Linoleum
Other: Carpeted

(6) Ceilings

X	Drywall

(7) Excavation

Basement: 2335 S.F.
Crawl: 0 S.F.
Slab: 0 S.F.
Height to Joists: 0.0

(8) Basement

	Conc. Block
	Poured Conc.
	Stone
	Treated Wood
	Concrete Floor

(9) Basement Finish

	Recreation SF
	Living SF
	Walkout Doors (B)
	No Floor SF
	Walkout Doors (A)

(10) Floor Support

Joists:
Unsupported Len:
Cntr.Sup:

(11) Heating/Cooling

X	Gas		Oil		Elec.
	Wood		Coal		Steam

	Forced Air w/o Ducts
X	Forced Air w/ Ducts
	Forced Hot Water
	Electric Baseboard
	Elec. Ceil. Radiant
	Radiant (in-floor)
	Electric Wall Heat
	Space Heater
	Wall/Floor Furnace
	Forced Heat & Cool
	Heat Pump
	No Heating/Cooling

	Central Air
	Wood Furnace

(12) Electric

150	Amps Service

No./Qual. of Fixtures

	Ex.	X	Ord.		Min

No. of Elec. Outlets

	Many	X	Ave.		Few

(13) Plumbing

	Average Fixture(s)
2	3 Fixture Bath
	2 Fixture Bath
	Softener, Auto
	Softener, Manual
	Solar Water Heat
	No Plumbing
	Extra Toilet
	Extra Sink
	Separate Shower
	Ceramic Tile Floor
	Ceramic Tile Wains
	Ceramic Tub Alcove
	Vent Fan

(14) Water/Sewer

	Public Water
	Public Sewer
1	Water Well
1	1000 Gal Septic
	2000 Gal Septic

Lump Sum Items:

(15) Built-ins

	Appliance Allow.
	Cook Top
	Dishwasher
	Garbage Disposal
	Bath Heater
	Vent Fan
	Hot Tub
	Unvented Hood
	Vented Hood
	Intercom
	Jacuzzi Tub
	Jacuzzi repl.Tub
	Oven
	Microwave
	Standard Range
	Self Clean Range
	Sauna
	Trash Compactor
	Central Vacuum
	Security System

(15) Fireplaces

	Interior 1 Story
	Interior 2 Story
	2nd/Same Stack
	Two Sided
	Exterior 1 Story
	Exterior 2 Story
	Prefab 1 Story
	Prefab 2 Story
	Heat Circulator
	Raised Hearth
	Wood Stove
	Direct-Vented Gas

Class: C
Effec. Age: 32
Floor Area: 2,335
Total Base New : 467,579 E.C.F.
Total Depr Cost: 317,951 X 1.297
Estimated T.C.V: 412,382

(16) Porches/Decks

Area	Type
451	WCP (1 Story)
320	WCP (1 Story)
64	WCP (1 Story)
138	WPP
185	Treated Wood
154	Treated Wood

(17) Garage

Year Built:
Car Capacity:
Class: C
Exterior: Siding
Brick Ven.: 0
Stone Ven.: 0
Common Wall: Detache
Foundation: 18 Inch
Finished ?:
Auto. Doors: 0
Mech. Doors: 0
Area: 1600
% Good: 0
Storage Area: 0
No Conc. Floor: 0

Bsmnt Garage:

Carport Area:
Roof:

Cost Est. for Res. Bldg: 1 Single Family PLAIN Cls C Blt 1982
(11) Heating System: Forced Air w/ Ducts
Ground Area = 2335 SF Floor Area = 2335 SF.
Phy/Ab.Phy/Func/Econ/Comb. % Good=68/100/100/100/68
Building Areas

Stories	Exterior	Foundation	Size	Cost New	Depr. Cost
1 Story	Siding	Basement	2,335		
			Total:	317,275	215,746
Other Additions/Adjustments					
Exterior					
Stone Veneer			200	7,646	5,199
Plumbing					
3 Fixture Bath			1	4,678	3,181
Water/Sewer					
1000 Gal Septic			1	4,899	3,331
Water Well, 100 Feet			1	5,849	3,977
Porches					
WCP (1 Story)			451	14,833	10,086
WCP (1 Story)			320	10,557	7,179
WCP (1 Story)			64	3,709	2,522
WPP			138	3,669	2,495
Deck					
Treated Wood			185	3,959	2,692
Treated Wood			154	3,511	2,387
Garages					
Class: C Exterior: Siding Foundation: 18 Inch (Unfinished)					
Base Cost			1600	51,824	35,240
Class: CD Exterior: Pole (Unfinished)					
Base Cost			1617	35,170	23,916
			Totals:	467,579	317,951

<<<<< Calculations too long. See Valuation printout for complete pricing. >>>>>

*** Information herein deemed reliable but not guaranteed***

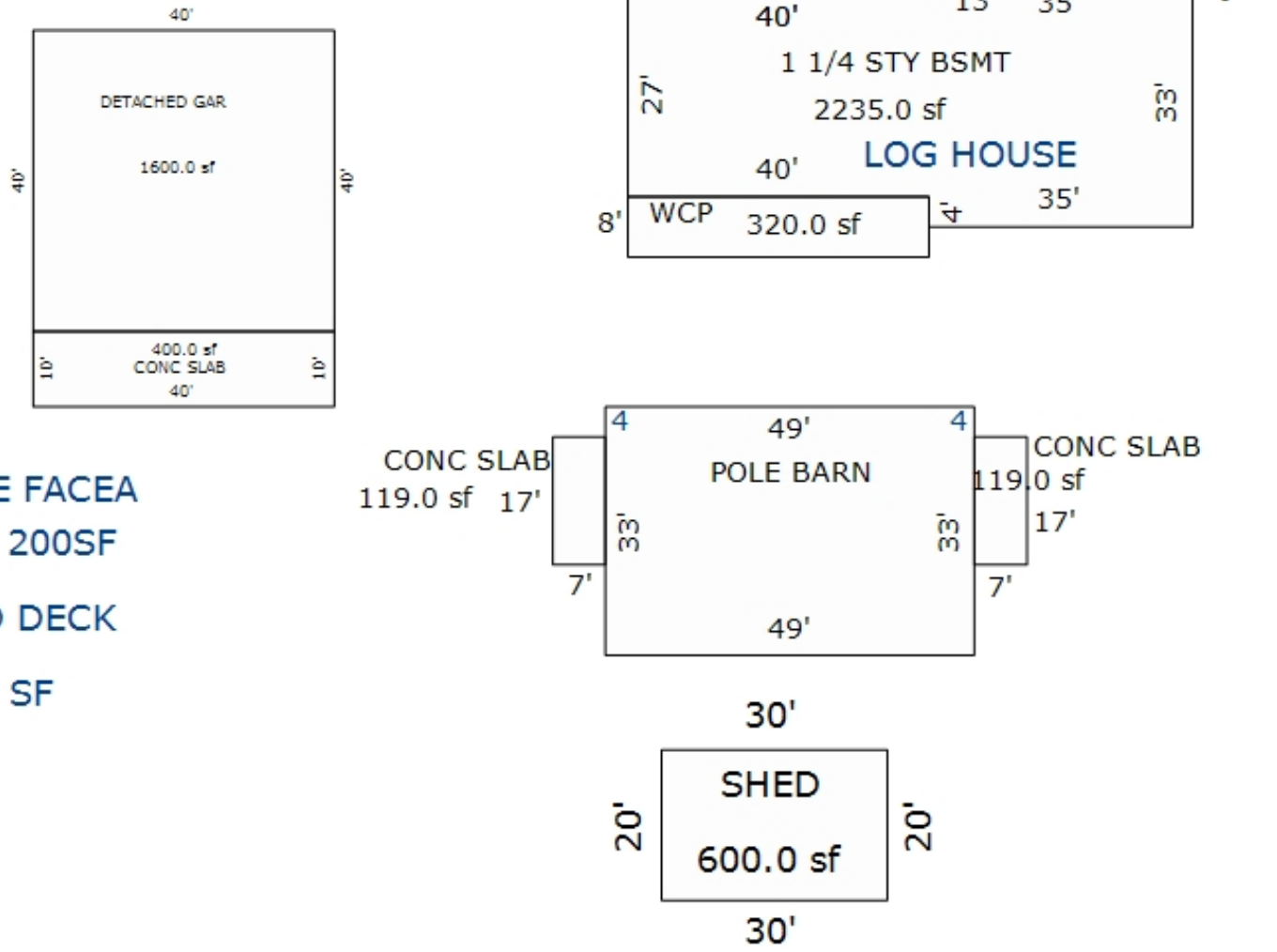

*** Information herein deemed reliable but not guaranteed***

Parcel Number: 2410-03-3305 Jurisdiction: GREENWOOD TWP County: WEXFORD Printed on 02/15/2024

Grantor	Grantee	Sale Price	Sale Date	Inst. Type	Terms of Sale	Liber & Page	Verified By	Prcnt. Trans.
SCHWALM, NANCY E LE	VORE, BEAU ALAN & RACHEL M	9,500	07/19/2018	WD	03-ARM'S LENGTH	6833/01	DEED	100.0
SCHWALM, NANCY E	SCHWALM, NANCY E LE	0	10/26/2016	QC	18-LIFE ESTATE	678/2188	DEED	0.0

Property Address

Owner's Name/Address

VORE, BEAU ALAN & RACHEL MICHELLE
11030 N 31 RD
KINGSLEY MI 49649

Tax Description

PAR COM SW COR OF SEC; N 765.47 FT; S 87D38M E 383.90 FT; N 85D12M04S E 149.75 FT TO POB: N 85D12M04S E 140.60 FT; N477D 58M04S E 90.45 FT; S 01D18M04S W 328.46 FT; S 85D43M04S W 53.49 FT; S 03D20M04S W 332.89 FT TO TRAVERSE LINE ALG BANK OF MANISTEE RIVER; S 85D30M53S W ALONG LINE 36.83 FT TO LINE ALG E BANK OF CRK; N 28D05M30S W 47.78 FT; N 17D58M48S W 67. 62 FT; N 50D13M06S W 42.53 FT; N 16D45M24S W 32.57 FT; N 75D 52M48S W 45.47 FT; N 31D10M08S W 27.75 FT; N 41D38M26S E 61. 66 FT; N 11D15M39S W

The Equalizer. Copyright (c) 1999 - 2009.
Licensed To: Township of Greenwood, County of Wexford, Michigan

Class: RESIDENTIAL-VACANT Zoning:
School: KINGSLEY AREA SCHOOL
P.R.E. 0%
:
2024 Est TCV 26,203

Building Permit(s)	Date	Number	Status

	Improved	X	Vacant

	Public Improvements
	Dirt Road
X	Gravel Road
	Paved Road
	Storm Sewer
	Sidewalk
	Water
	Sewer
X	Electric
	Gas
	Curb
	Street Lights
	Standard Utilities
	Underground Utils.

	Topography of Site
X	Level
X	Rolling
	Low
	High
	Landscaped
	Swamp
X	Wooded
	Pond
	Waterfront
	Ravine
	Wetland
	Flood Plain
X	OPEN

Who	When	What
GLA	10/31/2022	INSPECTION
GLA	06/09/2015	INSPECTION

Land Value Estimates for Land Table 4010.LAND VALUES

Description	Frontage	Depth	* Factors * Front	Depth	Rate	%Adj.	Reason	Value
MAN RIV HIGH	36.00	0.00	1.0000	1.0000	315	100		11,340
ACREAGE			2.680 Acres		5,546	100		14,863
ROW			0.140 Acres		0	100		0
36 Actual Front Feet, 2.82 Total Acres							Total Est. Land Value =	26,203

Year	Land Value	Building Value	Assessed Value	Board of Review	Tribunal/ Other	Taxable Value
2024	13,100	0	13,100			10,160C
2023	12,300	0	12,300			9,677C
2022	10,800	0	10,800			9,217C
2021	9,200	0	9,200			8,923C

*** Information herein deemed reliable but not guaranteed***

Parcel Number: 2410-03-3401 Jurisdiction: GREENWOOD TWP County: WEXFORD Printed on 02/15/2024

Grantor	Grantee	Sale Price	Sale Date	Inst. Type	Terms of Sale	Liber & Page	Verified By	Prcnt. Trans.

Property Address	Class: RESIDENTIAL-IMPROV	Zoning:	Building Permit(s)	Date	Number	Status
11012 N 31 RD	School: KINGSLEY AREA SCHOOL		RESIDENTIAL - REMODEL	08/08/2000	PB9865	
	P.R.E. 0%					
Owner's Name/Address	:					
MCKINLEY, RICHARD & PEARL 947 ERNST ST CADILLAC MI 49601	2024 Est TCV 145,455 TCV/TFA: 144.30					

X Improved | | Vacant

Land Value Estimates for Land Table 4010.LAND VALUES

Description	Frontage	Depth	* Factors * Front	Depth	Rate	%Adj.	Reason	Value
ACREAGE			8.020 Acres		4,910	100		39,376
ROW			0.150 Acres		0	100		0
			8.17 Total Acres		Total Est. Land Value =			39,376

Public Improvements

- Dirt Road
- X Gravel Road
- Paved Road
- Storm Sewer
- Sidewalk
- Water
- Sewer
- X Electric
- Gas
- Curb
- Street Lights
- Standard Utilities
- Underground Utils.

Land Improvement Cost Estimates

Description	Rate	Size	% Good	Cash Value
D/W/P: 4in Concrete	7.01	128	45	404
Wood Frame	29.04	100	42	1,220
Wood Frame	32.53	80	42	1,093
Total Estimated Land Improvements True Cash Value =				2,717

Topography of Site

- X Level
- Rolling
- Low
- High
- Landscaped
- Swamp
- X Wooded
- Pond
- Waterfront
- Ravine
- Wetland
- Flood Plain
- X OPEN

Tax Description

PAR COM AT S 1/4 COR OF SEC: W 775.90 FT TO N BANK OF MANISTEE RIVER; N 41D 37' W 38.60 FT; N 32D35' E 116.58 FT; N 74D00' E 100 FT; E 438 FT; N 02D45' 30" E 1148.19 FT; N 89D58'50" E 200 FT; S 1D55'40" W 1302.24 FT TO POB. --8.17 A M/L-- GW. SEC. 3 T24N R10W -KINGSLEY-

Comments/Influences

Who	When	What
GLA	10/31/2022	INSPECTION
GLA	06/09/2015	INSPECTION

Year	Land Value	Building Value	Assessed Value	Board of Review	Tribunal/ Other	Taxable Value
2024	19,700	53,000	72,700			33,220C
2023	12,300	43,700	56,000			31,639C
2022	11,000	37,200	48,200			30,133C
2021	11,900	37,800	49,700			29,171C

The Equalizer. Copyright (c) 1999 - 2009. Licensed To: Township of Greenwood, County of Wexford, Michigan

*** Information herein deemed reliable but not guaranteed***

Building Type

X	Single Family
	Mobile Home
	Town Home
	Duplex
	A-Frame
X	Wood Frame

Building Style: PLAIN

Yr Built	Remodeled
1973	0

Condition: Good

Room List

	Basement
	1st Floor
	2nd Floor
	Bedrooms

(1) Exterior

X	Wood/Shingle
	Aluminum/Vinyl
	Brick
X	Insulation

(2) Windows

	Many		Large
X	Avg.	X	Avg.
	Few		Small

X	Wood Sash
	Metal Sash
	Vinyl Sash
	Double Hung
	Horiz. Slide
	Casement
	Double Glass
	Patio Doors
X	Storms & Screens

(3) Roof

X	Gable		Gambrel
	Hip		Mansard
	Flat		Shed

X	Asphalt Shingle

Chimney:

(3) Roof (cont.)

	Eavestrough
X	Insulation
0	Front Overhang
0	Other Overhang

(4) Interior

X	Drywall		Plaster
	Paneled		Wood T&G

Trim & Decoration

	Ex	X	Ord		Min

Size of Closets

	Lg	X	Ord		Small

Doors:		Solid	X	H.C.	

(5) Floors

Kitchen:
Other: Linoleum
Other: Carpeted

(6) Ceilings

X	Drywall

(7) Excavation

Basement: 0 S.F.
Crawl: 1008 S.F.
Slab: 0 S.F.
Height to Joists: 0.0

(8) Basement

	Conc. Block
	Poured Conc.
	Stone
	Treated Wood
	Concrete Floor

(9) Basement Finish

	Recreation SF
	Living SF
	Walkout Doors (B)
	No Floor SF
	Walkout Doors (A)

(10) Floor Support

Joists:
Unsupported Len:
Cntr.Sup:

(11) Heating/Cooling

X	Gas		Oil		Elec.
	Wood		Coal		Steam

	Forced Air w/o Ducts
X	Forced Air w/ Ducts
	Forced Hot Water
	Electric Baseboard
	Elec. Ceil. Radiant
	Radiant (in-floor)
	Electric Wall Heat
	Space Heater
	Wall/Floor Furnace
	Forced Heat & Cool
	Heat Pump
	No Heating/Cooling
	Central Air
	Wood Furnace

(12) Electric

100	Amps Service

No./Qual. of Fixtures

	Ex.	X	Ord.		Min

No. of Elec. Outlets

	Many	X	Ave.		Few

(13) Plumbing

1	Average Fixture(s)
	3 Fixture Bath
	2 Fixture Bath
	Softener, Auto
	Softener, Manual
	Solar Water Heat
	No Plumbing
	Extra Toilet
	Extra Sink
	Separate Shower
	Ceramic Tile Floor
	Ceramic Tile Wains
	Ceramic Tub Alcove
	Vent Fan

(14) Water/Sewer

	Public Water
	Public Sewer
1	Water Well
1	1000 Gal Septic
	2000 Gal Septic

Lump Sum Items:

(15) Built-ins

	Appliance Allow.
	Cook Top
	Dishwasher
	Garbage Disposal
	Bath Heater
	Vent Fan
	Hot Tub
	Unvented Hood
	Vented Hood
	Intercom
	Jacuzzi Tub
	Jacuzzi repl.Tub
	Oven
	Microwave
	Standard Range
	Self Clean Range
	Sauna
	Trash Compactor
	Central Vacuum
	Security System

(15) Fireplaces

	Interior 1 Story
	Interior 2 Story
	2nd/Same Stack
	Two Sided
	Exterior 1 Story
	Exterior 2 Story
	Prefab 1 Story
	Prefab 2 Story
	Heat Circulator
	Raised Hearth
	Wood Stove
	Direct-Vented Gas

Class: CD
Effec. Age: 50
Floor Area: 1,008
Total Base New : 159,391 E.C.F.
Total Depr Cost: 79,693 X 1.297
Estimated T.C.V: 103,362

(16) Porches/Decks

Area	Type
192	WPP
144	WSEP (1 Story)

(17) Garage

Year Built:
Car Capacity:
Class: CD
Exterior: Pole
Brick Ven.: 0
Stone Ven.: 0
Common Wall: Detache
Foundation: 18 Inch
Finished ?:
Auto. Doors: 0
Mech. Doors: 0
Area: 768
% Good: 0
Storage Area: 0
No Conc. Floor: 0

Bsmnt Garage:

Carport Area:
Roof:

Cost Est. for Res. Bldg: 1 Single Family PLAIN Cls CD Blt 1973
(11) Heating System: Forced Air w/ Ducts
Ground Area = 1008 SF Floor Area = 1008 SF.
Phy/Ab.Phy/Func/Econ/Comb. % Good=50/100/100/100/50
Building Areas

Stories	Exterior	Foundation	Size	Cost New	Depr. Cost
1 Story	Siding	Crawl Space	1,008		
			Total:	119,608	59,802
Other Additions/Adjustments					
Water/Sewer					
1000 Gal Septic			1	4,582	2,291
Water Well, 100 Feet			1	5,680	2,840
Porches					
WPP			192	4,003	2,001
WSEP (1 Story)			144	7,124	3,562
Garages					
Class: CD Exterior: Pole (Unfinished)					
Base Cost			768	18,394	9,197
			Totals:	159,391	79,693

Notes:
ECF (RESIDENTIAL) 1.297 => TCV: 103,362

*** Information herein deemed reliable but not guaranteed***

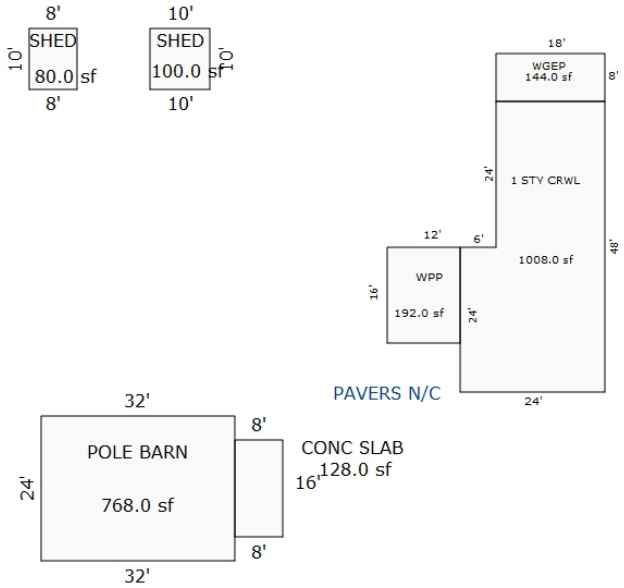

Sketch by Apex Sketch

*** Information herein deemed reliable but not guaranteed***

Parcel Number: 2410-03-3402 Jurisdiction: GREENWOOD TWP County: WEXFORD Printed on 02/15/2024

Grantor	Grantee	Sale Price	Sale Date	Inst. Type	Terms of Sale	Liber & Page	Verified By	Prcnt. Trans.
HOFFMAN, JOYCE M SURV LAWR	HOFFMAN, JOYCE M REAL ESTA	0	05/29/2015	WD	14-INTO/OUT OF TRUST	675/1429	DEED	0.0
HOFFMAN, CHRISTIAN W. & KR	HOFFMAN, LAWRENCE S & JOYC	6,000	05/28/2010	WD	09-FAMILY	630/1568	DEED	100.0
MCKINLEY, EDWARD D.	HOFFMAN, CHRISTIAN & KRIST	6,000	08/05/1997	WD	03-ARM'S LENGTH	356:232	DEED	0.0

Property Address

Owner's Name/Address

HOFFMAN, JOYCE M REAL ESTATE TRUST
6364 BERKSHIRE LN
CADILLAC MI 49601

Tax Description

PAR COM 775.90 FT W & 38.60 FT N 41D 37' W OF S 1/4 COR OF SEC: N 41D37' W 38.60 FT; N 08D46' E 122.14 FT; N 47D 00' E 100 FT; N 85D00' E 370 FT; N 500 FT; N 08D11'30" W 496.37 FT; N 72D06' 50" E 99.85 FT; N 89D58'40" E 181.07 FT; S 02D45'30" W 1148.19 FT; W 438 FT; S 74D W 100 FT; S 32D35' W 116.58 TO POB EXC COM AT S 1/4 COR OF SD SEC; W 775.75 FT TO A PTE ON A BANK OF MANISTEE RIVER; N43DEG06'15"W 63.65 FT TO POB; N 43 DEG06'15"W 12.11 FT; N09DEG27'45" E 123.13 FT; N47 DEG41'45" E 100.81 FT; N85DES41'45"E 130.60 FT; S30DEG6'09" W 89.98 FT; S74*56'09"W 89.98 FT; S74*19'57" W 109.03 FT: S32*53'03"W 120.67 FT TO POB---6.03 AC M/L . - (2019 BOUNDRY ADJUSTMENT .38)

Comments/Influences

The Equalizer. Copyright (c) 1999 - 2009. Licensed To: Township of Greenwood, County of Wexford, Michigan

Class: RESIDENTIAL-IMPROV Zoning:

School: KINGSLEY AREA SCHOOL

P.R.E. 0%

:

2024 Est TCV 51,623 TCV/TFA: 0.00

Building Permit(s)	Date	Number	Status

X Improved | Vacant

	Public Improvements
	Dirt Road
X	Gravel Road
	Paved Road
	Storm Sewer
	Sidewalk
	Water
	Sewer
X	Electric
	Gas
	Curb
	Street Lights
	Standard Utilities
	Underground Utils.

	Topography of Site
	Level
X	Rolling
	Low
	High
	Landscaped
	Swamp
X	Wooded
	Pond
	Waterfront
	Ravine
	Wetland
	Flood Plain
X	OPEN

Who	When	What
GLA	10/31/2022	INSPECTION
GLA	06/09/2015	INSPECTION

Land Value Estimates for Land Table 4010.LAND VALUES

Description	Frontage	Depth	* Factors * Front	Depth	Rate	%Adj.	Reason	Value
ACREAGE			5.950 Acres		5,112	100		30,416
ROW			0.080 Acres		0	100		0
			6.03 Total Acres		Total Est. Land Value =			30,416

Land Improvement Cost Estimates

Description	Rate	Size	% Good	Cash Value
Wood Frame	29.74	96	43	1,228
Wood Frame	32.53	80	43	1,119
Total Estimated Land Improvements True Cash Value =				2,347

Year	Land Value	Building Value	Assessed Value	Board of Review	Tribunal/ Other	Taxable Value
2024	15,200	10,600	25,800			10,784C
2023	11,300	8,800	20,100			10,271C
2022	8,900	7,500	16,400			9,782C
2021	10,100	7,500	17,600			9,470C

*** Information herein deemed reliable but not guaranteed***

Building Type

X	Single Family
	Mobile Home
	Town Home
	Duplex
	A-Frame
X	Wood Frame

Building Style: PLAIN

Yr Built	Remodeled
0	0

Condition: Good

Room List

	Basement
	1st Floor
	2nd Floor
	Bedrooms

(1) Exterior

X	Wood/Shingle
	Aluminum/Vinyl
	Brick
X	Insulation

(2) Windows

X	Many Avg. Few	X	Large Avg. Small

	Wood Sash
	Metal Sash
X	Vinyl Sash
	Double Hung
	Horiz. Slide
	Casement
	Double Glass
	Patio Doors
X	Storms & Screens

(3) Roof

X	Gable		Gambrel
	Hip		Mansard
	Flat		Shed

X	Asphalt Shingle

Chimney:

(3) Roof (cont.)

	Eavestrough
X	Insulation
0	Front Overhang
0	Other Overhang

(4) Interior

X	Drywall Paneled		Plaster Wood T&G

Trim & Decoration

	Ex	X	Ord		Min

Size of Closets

	Lg	X	Ord		Small

Doors:		Solid	X	H.C.	

(5) Floors

Kitchen:
Other: Linoleum
Other: Carpeted

(6) Ceilings

X	Drywall

(7) Excavation

Basement: 0 S.F.
Crawl: 0 S.F.
Slab: 0 S.F.
Height to Joists: 0.0

(8) Basement

	Conc. Block
	Poured Conc.
	Stone
	Treated Wood
	Concrete Floor

(9) Basement Finish

	Recreation SF
	Living SF
	Walkout Doors (B)
	No Floor SF
	Walkout Doors (A)

(10) Floor Support

Joists:
Unsupported Len:
Cntr.Sup:

(11) Heating/Cooling

X	Gas		Oil		Elec.
	Wood		Coal		Steam

	Forced Air w/o Ducts
X	Forced Air w/ Ducts
	Forced Hot Water
	Electric Baseboard
	Elec. Ceil. Radiant
	Radiant (in-floor)
	Electric Wall Heat
	Space Heater
	Wall/Floor Furnace
	Forced Heat & Cool
	Heat Pump
	No Heating/Cooling

	Central Air
	Wood Furnace

(12) Electric

150	Amps Service

No./Qual. of Fixtures

	Ex.	X	Ord.		Min

No. of Elec. Outlets

	Many	X	Ave.		Few

(13) Plumbing

1	Average Fixture(s)
	3 Fixture Bath
	2 Fixture Bath
	Softener, Auto
	Softener, Manual
	Solar Water Heat
	No Plumbing
	Extra Toilet
	Extra Sink
	Separate Shower
	Ceramic Tile Floor
	Ceramic Tile Wains
	Ceramic Tub Alcove
	Vent Fan

(14) Water/Sewer

	Public Water
	Public Sewer
	Water Well
	1000 Gal Septic
	2000 Gal Septic

Lump Sum Items:

(15) Built-ins

	Appliance Allow.
	Cook Top
	Dishwasher
	Garbage Disposal
	Bath Heater
	Vent Fan
	Hot Tub
	Unvented Hood
	Vented Hood
	Intercom
	Jacuzzi Tub
	Jacuzzi repl.Tub
	Oven
	Microwave
	Standard Range
	Self Clean Range
	Sauna
	Trash Compactor
	Central Vacuum
	Security System

(15) Fireplaces

	Interior 1 Story
	Interior 2 Story
	2nd/Same Stack
	Two Sided
	Exterior 1 Story
	Exterior 2 Story
	Prefab 1 Story
	Prefab 2 Story
	Heat Circulator
	Raised Hearth
	Wood Stove
	Direct-Vented Gas

Class: CD
Effec. Age: 20
Floor Area: 0
Total Base New : 18,176 E.C.F.
Total Depr Cost: 14,541 X 1.297
Estimated T.C.V: 18,860

(16) Porches/Decks

Area	Type

(17) Garage

Year Built:
Car Capacity:
Class: CD
Exterior: Siding
Brick Ven.: 0
Stone Ven.: 0
Common Wall: Detache
Foundation: 42 Inch
Finished ?: Yes
Auto. Doors: 0
Mech. Doors: 0
Area: 320
% Good: 0
Storage Area: 0
No Conc. Floor: 0

Bsmnt Garage:

Carport Area:
Roof:

Cost Est. for Res. Bldg: 1 Single Family PLAIN Cls CD Blt 0
(11) Heating System: Forced Air w/ Ducts
Ground Area = 0 SF Floor Area = 0 SF.
Phy/Ab.Phy/Func/Econ/Comb. % Good=80/100/100/100/80
Building Areas

Stories	Exterior	Foundation	Size	Cost New	Depr. Cost
Other Additions/Adjustments					
Garages					
Class: CD Exterior: Siding Foundation: 42 Inch (Finished)					
Base Cost			320	18,176	14,541
			Totals:	18,176	14,541

Notes:
ECF (RESIDENTIAL) 1.297 => TCV: 18,860

*** Information herein deemed reliable but not guaranteed***

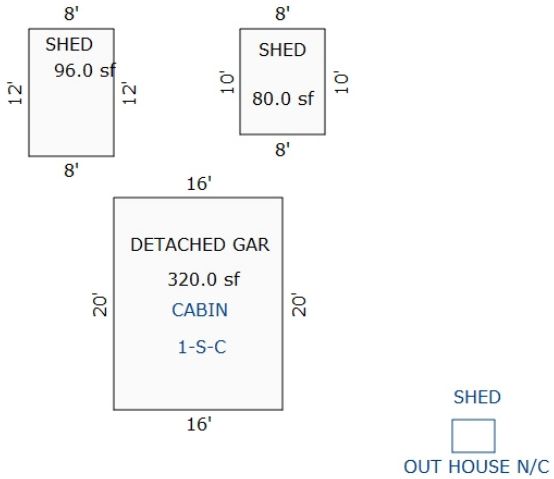

Sketch by Apex Sketch

*** Information herein deemed reliable but not guaranteed***

Parcel Number: 2410-03-3403 Jurisdiction: GREENWOOD TWP County: WEXFORD Printed on 02/15/2024

Grantor	Grantee	Sale Price	Sale Date	Inst. Type	Terms of Sale	Liber & Page	Verified By	Prcnt. Trans.
HOFFMAN, CHRISTIAN W	CARPENTER, JESSICA	259,000	07/27/2020	WD	03-ARM'S LENGTH	687 /2582	DEED	100.0
HOFFMAN, JOYCE M REAL ESTA	HOFFMAN, CHRISTIAN W	0	04/23/2019	WD	09-FAMILY	684 /2885	DEED	0.0
HOFFMAN, KRISTINE L	HOFFMAN, CHRISTIAN W	0	05/27/2015	QC	06-COURT JUDGEMENT	675/1427	DEED	0.0
CLASE, DAVID L.	HOFFMAN, CHRISTIAN W.	38,700	09/14/1994	WD	03-ARM'S LENGTH	341:211	DEED	0.0

Property Address

11040 N 31 RD

Owner's Name/Address

CARPENTER, JESSICA
11040 N 31 RD
KINGSLEY MI 49649

Tax Description

PAR COM 775.90 FT W & 41D37' W 77.20 FT FROM S 1/4 COR OF SEC: N 41D37' W 38.60 FT ALONG RIVERBANK; N 01D12' W 122.20 FT; N 20D00' E 132 FT; N 80D 00' E 250 FT; N 400 FT; N 19D11' W 427.28 FT; N 72D06'50" E 280.92 FT; S 08D11'30" E 496.37 FT; S 500 FT; S 85D00' W 370 FT; S 47D00'W 100 FT; S 08D46' W 122.14 FT TO POB &COM AT S 1/4 COR OF SD SEC; W 775.75 FT TO A PTE ON E BANK OF MANISTEE RIVER; N43*06'15"W 63.65 FT TO POB: N43*06'15" W 12.11 FT N09*27'45" E 123.13 FT; N47*4145" E 100.81 FT ; N85*41'45"E 130.60 FT: S30*56'09"W 89.98 FT; S74*19'57"W 109.03FT; S32*53'03"W 120.67FT TO OB 6.04 AC M/L-- GW. SEC. 3 T24N R10W -KINGSLEY- (BOUNDRY ADJUSTMENT 2019 .38 AC M/L)

Comments/Influences

The Equalizer. Copyright (c) 1999 - 2009. Licensed To: Township of Greenwood, County of Wexford, Michigan

Class: RESIDENTIAL-IMPROV Zoning:

School: KINGSLEY AREA SCHOOL

P.R.E. 100% 08/06/2020

:

2024 Est TCV 370,713 TCV/TFA: 183.89

Building Permit(s)	Date	Number	Status
RESIDENTIAL - REMODEL	10/12/2001	PM5361	

[X] Improved [ ] Vacant

Public Improvements

- [X] Dirt Road
- [X] Gravel Road
- [ ] Paved Road
- [ ] Storm Sewer
- [ ] Sidewalk
- [ ] Water
- [ ] Sewer
- [X] Electric
- [ ] Gas
- [ ] Curb
- [ ] Street Lights
- [ ] Standard Utilities
- [ ] Underground Utils.

Topography of Site

- [ ] Level
- [X] Rolling
- [ ] Low
- [ ] High
- [ ] Landscaped
- [ ] Swamp
- [X] Wooded
- [ ] Pond
- [ ] Waterfront
- [ ] Ravine
- [ ] Wetland
- [ ] Flood Plain
- [X] OPEN

Who	When	What
GLA	05/13/2021	INSPECTION

Land Value Estimates for Land Table 4010.LAND VALUES

Description	Frontage	Depth	* Factors * Front	Depth	Rate	%Adj.	Reason	Value
MAN RIV HIGH	32.00	0.00	1.0000	1.0000	315	100		10,080
ACREAGE			5.823 Acres		5,112	100		29,767
ROW			0.217 Acres		0	100		0

32 Actual Front Feet, 6.04 Total Acres Total Est. Land Value = 39,847

Land Improvement Cost Estimates

Description	Rate	Size	% Good	Cash Value
D/W/P: 3.5 Concrete	6.63	778	58	2,992

Total Estimated Land Improvements True Cash Value = 2,992

Year	Land Value	Building Value	Assessed Value	Board of Review	Tribunal/ Other	Taxable Value
2024	19,900	165,500	185,400			134,272C
2023	15,900	135,200	151,100			127,879C
2022	13,100	114,100	127,200			121,790C
2021	13,100	104,800	117,900			117,900S

*** Information herein deemed reliable but not guaranteed***

Building Type

X	Single Family
	Mobile Home
	Town Home
	Duplex
	A-Frame
X	Wood Frame

Building Style: PLAIN

Yr Built	Remodeled
1998	0

Condition: Good

Room List

	Basement
	1st Floor
	2nd Floor
	Bedrooms

(1) Exterior

	Wood/Shingle
	Aluminum/Vinyl
	Brick
X	Vinyl
X	Insulation

(2) Windows

X	Many Avg. Few	X	Large Avg. Small

X	Wood Sash
	Metal Sash
	Vinyl Sash
	Double Hung
X	Horiz. Slide
	Casement
	Double Glass
X	Patio Doors
X	Storms & Screens

(3) Roof

X	Gable		Gambrel
	Hip		Mansard
	Flat		Shed

X	Asphalt Shingle

Chimney:

(3) Roof (cont.)

	Eavestrough
X	Insulation
0	Front Overhang
0	Other Overhang

(4) Interior

X	Drywall Paneled		Plaster Wood T&G

Trim & Decoration

	Ex	X	Ord		Min

Size of Closets

	Lg	X	Ord		Small

Doors: | | Solid | X | H.C.

(5) Floors

Kitchen: Laminate
Other: Tile
Other: Carpeted

(6) Ceilings

X	Drywall
X	Skylight

(7) Excavation

Basement: 0 S.F.
Crawl: 1008 S.F.
Slab: 0 S.F.
Height to Joists: 0.0

(8) Basement

	Conc. Block
	Poured Conc.
	Stone
	Treated Wood
	Concrete Floor

(9) Basement Finish

	Recreation SF
	Living SF
	Walkout Doors (B)
	No Floor SF
	Walkout Doors (A)

(10) Floor Support

Joists:
Unsupported Len:
Cntr.Sup:

(11) Heating/Cooling

X	Gas		Oil		Elec.
	Wood		Coal		Steam

	Forced Air w/o Ducts
	Forced Air w/ Ducts
	Forced Hot Water
	Electric Baseboard
	Elec. Ceil. Radiant
	Radiant (in-floor)
	Electric Wall Heat
	Space Heater
	Wall/Floor Furnace
X	Forced Heat & Cool
	Heat Pump
	No Heating/Cooling

X	Central Air
	Wood Furnace

(12) Electric

150	Amps Service

No./Qual. of Fixtures

	Ex.	X	Ord.		Min

No. of Elec. Outlets

	Many	X	Ave.		Few

(13) Plumbing

	Average Fixture(s)
2	3 Fixture Bath
	2 Fixture Bath
	Softener, Auto
	Softener, Manual
	Solar Water Heat
	No Plumbing
	Extra Toilet
	Extra Sink
	Separate Shower
	Ceramic Tile Floor
	Ceramic Tile Wains
	Ceramic Tub Alcove
	Vent Fan

(14) Water/Sewer

	Public Water
	Public Sewer
1	Water Well
1	1000 Gal Septic
	2000 Gal Septic

Lump Sum Items:

(15) Built-ins

	Appliance Allow.
	Cook Top
	Dishwasher
	Garbage Disposal
	Bath Heater
	Vent Fan
	Hot Tub
	Unvented Hood
	Vented Hood
	Intercom
	Jacuzzi Tub
	Jacuzzi repl.Tub
	Oven
	Microwave
	Standard Range
	Self Clean Range
	Sauna
	Trash Compactor
	Central Vacuum
	Security System

(15) Fireplaces

	Interior 1 Story
	Interior 2 Story
	2nd/Same Stack
	Two Sided
	Exterior 1 Story
	Exterior 2 Story
	Prefab 1 Story
	Prefab 2 Story
	Heat Circulator
	Raised Hearth
	Wood Stove
1	Direct-Vented Gas

Class: C
Effec. Age: 26
Floor Area: 2,016
Total Base New : 341,614 E.C.F.
Total Depr Cost: 252,794 X 1.297
Estimated T.C.V: 327,874

(16) Porches/Decks

Area	Type
192	WSEP (1 Story)
60	WCP (1 Story)
140	WGEP (2 Story)
64	4in Concrete
144	Treated Wood
279	Treated Wood

(17) Garage

Year Built:
Car Capacity:
Class: CD
Exterior: Siding
Brick Ven.: 0
Stone Ven.: 0
Common Wall: Detache
Foundation: 18 Inch
Finished ?:
Auto. Doors: 0
Mech. Doors: 0
Area: 896
% Good: 0
Storage Area: 0
No Conc. Floor: 0

Bsmnt Garage:

Carport Area:
Roof:

Cost Est. for Res. Bldg: 1 Single Family PLAIN Cls C Blt 1998
(11) Heating System: Forced Heat & Cool, Air Conditioning
Ground Area = 1008 SF Floor Area = 2016 SF.
Phy/Ab.Phy/Func/Econ/Comb. % Good=74/100/100/100/74
Building Areas

Stories	Exterior	Foundation	Size	Cost New	Depr. Cost
2 Story	Siding	Crawl Space	1,008		
			Total:	253,570	187,642
Other Additions/Adjustments					
Plumbing					
3 Fixture Bath			1	4,678	3,462
Water/Sewer					
1000 Gal Septic			1	4,899	3,625
Water Well, 100 Feet			1	5,849	4,328
Porches					
WSEP (1 Story)			192	9,944	7,359
WCP (1 Story)			60	3,545	2,623
WGEP (2 Story)			140	19,372	14,335
4in Concrete			64	527	390
Deck					
Treated Wood			144	3,362	2,488
Treated Wood			279	5,192	3,842
Garages					
Class: CD Exterior: Siding Foundation: 18 Inch (Unfinished)					
Base Cost			896	27,633	20,448
Fireplaces					
Direct-Vented Gas			1	3,043	2,252
			Totals:	341,614	252,794

Notes:
ECF (RESIDENTIAL) 1.297 => TCV: 327,874

*** Information herein deemed reliable but not guaranteed***

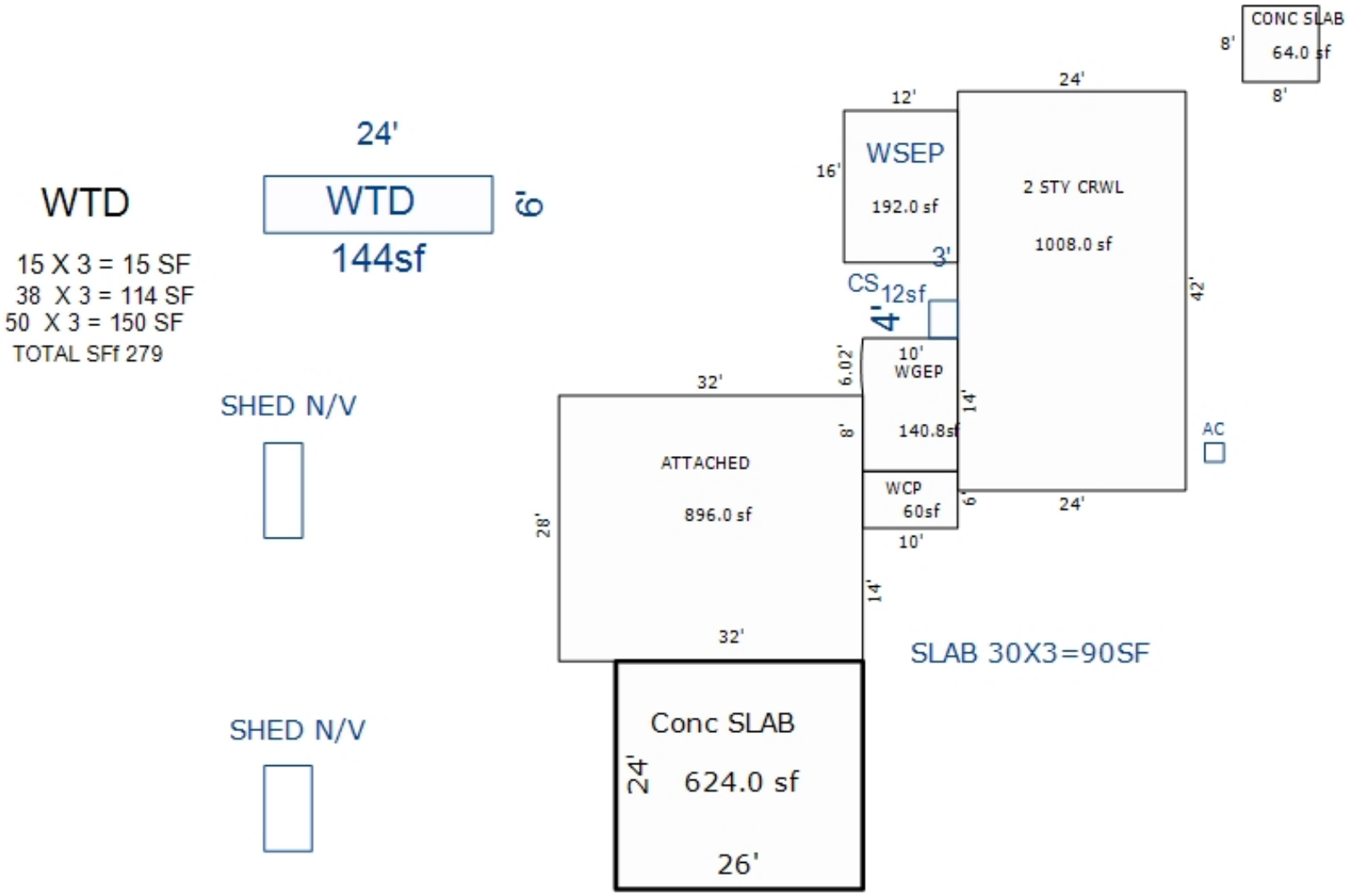

*** Information herein deemed reliable but not guaranteed***

Parcel Number: 2410-03-3404 Jurisdiction: GREENWOOD TWP County: WEXFORD Printed on 02/15/2024

Grantor	Grantee	Sale Price	Sale Date	Inst. Type	Terms of Sale	Liber & Page	Verified By	Prcnt. Trans.
MCKINLEY BILL & RUTH TRUST	MCKINLEY, MARK ALAN	0	02/16/2022	QC	09-FAMILY	692/1016	DEED	0.0
HOFFMAN CHRISTIAN	MCKINLEY BILL & RUTH TRUST	0	01/29/2020	QC	09-FAMILY	686 /1836	DEED	0.0
MCKINLEY, BILLY & RUTH TRU	HOFFMAN CHRISTIAN	100	01/14/2020	QC	21-NOT USED/OTHER	686 /1625	DEED	0.0
MCKINLEY, BILLY & RUTH TRU		0	07/09/2015	QC	14-INTO/OUT OF TRUST	675/2183	DEED	0.0

Property Address

11038 N 31 RD

Owner's Name/Address

MCKINLEY, MARK ALAN
416 E CASS ST
CADILLAC MI 49601

Tax Description

PAR COM 775.90 FT W & 115.80 FT N 41D 37' W OF S 1/4-COR OF SEC: N 41D37' W 2.59 FT; N 80D36' W 36 FT ALONG RIVER- BANK; N 333.17 FT; N 74D14'40" E 142. 78 FT; N 17D04'40" E 94.13 FT; N 16D 53'10" W 202.50 FT; N 27D17'10" W 399. 10 FT; N 72D06'50" E 280.92 FT; S 19D 11' E 427.28 FT; S 400 FT; S 80D00' W 250 FT; S 20D00' W 132 FT; S 01D12' E 122.20 FT TO POB. 4.72 AC M/L GW. SEC. 3 T24N R10W -KINGSLEY-

Comments/Influences

Class: RESIDENTIAL-IMPROV Zoning:

School: KINGSLEY AREA SCHOOL

P.R.E. 0%

:

2024 Est TCV 107,333 TCV/TFA: 136.90

Building Permit(s)	Date	Number	Status

X Improved | Vacant

Public Improvements

	Dirt Road
X	Gravel Road
	Paved Road
	Storm Sewer
	Sidewalk
	Water
	Sewer
X	Electric
	Gas
	Curb
	Street Lights
	Standard Utilities
	Underground Utils.

Topography of Site

	Level
X	Rolling
	Low
	High
	Landscaped
	Swamp
X	Wooded
	Pond
	Waterfront
	Ravine
	Wetland
	Flood Plain

Who	When	What
GLA	10/31/2022	INSPECTION
GLA	06/09/2015	INSPECTION

Land Value Estimates for Land Table 4010.LAND VALUES

Description	Frontage	Depth	* Factors * Front	Depth	Rate	%Adj.	Reason	Value
ACREAGE			4.030 Acres		5,033	100		20,283
ROW			0.690 Acres		0	100		0
			4.72 Total Acres		Total Est. Land Value =			20,283

Land Improvement Cost Estimates

Description	Rate	Size	% Good	Cash Value
D/W/P: 4in Concrete	7.01	6	42	18
Wood Frame	25.17	192	52	2,513
Total Estimated Land Improvements True Cash Value =				2,531

Year	Land Value	Building Value	Assessed Value	Board of Review	Tribunal/ Other	Taxable Value
2024	10,100	43,600	53,700			25,331C
2023	9,400	35,900	45,300			24,125C
2022	7,000	30,500	37,500			22,977C
2021	8,400	30,900	39,300			22,243C

The Equalizer. Copyright (c) 1999 - 2009. Licensed To: Township of Greenwood, County of Wexford, Michigan

*** Information herein deemed reliable but not guaranteed***

Building Type

X	Single Family
	Mobile Home
	Town Home
	Duplex
	A-Frame
X	Wood Frame

Building Style: PLAIN

Yr Built	Remodeled
1975	0

Condition: Good

Room List

	Basement
	1st Floor
	2nd Floor
	Bedrooms

(1) Exterior

	Wood/Shingle
X	Aluminum/Vinyl
	Brick
X	Insulation

(2) Windows

	Many		Large
X	Avg.	X	Avg.
	Few		Small

	Wood Sash
	Metal Sash
X	Vinyl Sash
	Double Hung
	Horiz. Slide
	Casement
	Double Glass
	Patio Doors
X	Storms & Screens

(3) Roof

X	Gable		Gambrel
	Hip		Mansard
	Flat		Shed

X	Asphalt Shingle

Chimney:

(3) Roof (cont.)

	Eavestrough
X	Insulation
0	Front Overhang
0	Other Overhang

(4) Interior

X	Drywall		Plaster
	Paneled		Wood T&G

Trim & Decoration

	Ex	X	Ord		Min

Size of Closets

	Lg	X	Ord		Small

Doors:		Solid	X	H.C.	

(5) Floors

Kitchen:
Other: Linoleum
Other: Carpeted

(6) Ceilings

X	Drywall		

(7) Excavation

Basement: 0 S.F.
Crawl: 784 S.F.
Slab: 0 S.F.
Height to Joists: 0.0

(8) Basement

	Conc. Block
	Poured Conc.
	Stone
	Treated Wood
	Concrete Floor

(9) Basement Finish

	Recreation SF
	Living SF
	Walkout Doors (B)
	No Floor SF
	Walkout Doors (A)

(10) Floor Support

Joists:
Unsupported Len:
Cntr.Sup:

(11) Heating/Cooling

X	Gas		Oil		Elec.
	Wood		Coal		Steam

	Forced Air w/o Ducts
X	Forced Air w/ Ducts
	Forced Hot Water
	Electric Baseboard
	Elec. Ceil. Radiant
	Radiant (in-floor)
	Electric Wall Heat
	Space Heater
	Wall/Floor Furnace
	Forced Heat & Cool
	Heat Pump
	No Heating/Cooling

	Central Air
	Wood Furnace

(12) Electric

150	Amps Service

No./Qual. of Fixtures

	Ex.	X	Ord.		Min

No. of Elec. Outlets

	Many	X	Ave.		Few

(13) Plumbing

1	Average Fixture(s)
	3 Fixture Bath
	2 Fixture Bath
	Softener, Auto
	Softener, Manual
	Solar Water Heat
	No Plumbing
	Extra Toilet
	Extra Sink
	Separate Shower
	Ceramic Tile Floor
	Ceramic Tile Wains
	Ceramic Tub Alcove
	Vent Fan

(14) Water/Sewer

	Public Water
	Public Sewer
1	Water Well
1	1000 Gal Septic
	2000 Gal Septic

Lump Sum Items:

(15) Built-ins

	Appliance Allow.
	Cook Top
	Dishwasher
	Garbage Disposal
	Bath Heater
	Vent Fan
	Hot Tub
	Unvented Hood
	Vented Hood
	Intercom
	Jacuzzi Tub
	Jacuzzi repl.Tub
	Oven
	Microwave
	Standard Range
	Self Clean Range
	Sauna
	Trash Compactor
	Central Vacuum
	Security System

(15) Fireplaces

	Interior 1 Story
	Interior 2 Story
	2nd/Same Stack
	Two Sided
	Exterior 1 Story
	Exterior 2 Story
	Prefab 1 Story
	Prefab 2 Story
	Heat Circulator
	Raised Hearth
	Wood Stove
	Direct-Vented Gas

Class: CD
Effec. Age: 48
Floor Area: 784
Total Base New : 125,313 E.C.F.
Total Depr Cost: 65,165 X 1.297
Estimated T.C.V: 84,519

(16) Porches/Decks

Area	Type
128	WGEP (1 Story)
56	WGEP (1 Story)
16	WPP
16	WPP
16	WPP

(17) Garage

Year Built:
Car Capacity:
Class:
Exterior:
Brick Ven.:
Stone Ven.:
Common Wall:
Foundation:
Finished ?:
Auto. Doors:
Mech. Doors:
Area:
% Good:
Storage Area:
No Conc. Floor:

Bsmnt Garage:

Carport Area:
Roof:

Cost Est. for Res. Bldg: 1 Single Family PLAIN Cls CD Blt 1975
(11) Heating System: Forced Air w/ Ducts
Ground Area = 784 SF Floor Area = 784 SF.
Phy/Ab.Phy/Func/Econ/Comb. % Good=52/100/100/100/52

Building Areas

Stories	Exterior	Foundation	Size	Cost New	Depr. Cost
1 Story	Siding	Crawl Space	784		
			Total:	96,109	49,977
Other Additions/Adjustments					
Water/Sewer					
1000 Gal Septic			1	4,582	2,383
Water Well, 100 Feet			1	5,680	2,954
Porches					
WGEP (1 Story)			128	10,487	5,453
WGEP (1 Story)			56	6,040	3,141
WPP			16	805	419
WPP			16	805	419
WPP			16	805	419
			Totals:	125,313	65,165

Notes:

ECF (RESIDENTIAL) 1.297 => TCV: 84,519

*** Information herein deemed reliable but not guaranteed***

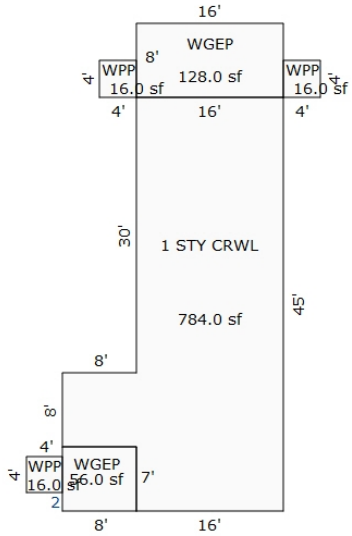

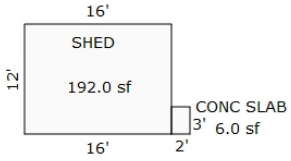

Sketch by Apex Sketch

*** Information herein deemed reliable but not guaranteed***

Parcel Number: 2410-03-4101 Jurisdiction: GREENWOOD TWP County: WEXFORD Printed on 02/15/2024

Grantor	Grantee	Sale Price	Sale Date	Inst. Type	Terms of Sale	Liber & Page	Verified By	Prcnt. Trans.
OLDS, RICHARD R.	OLDS AARON P & OLDS JUSTIN	0	10/29/2023	QC	21-NOT USED/OTHER		DEED	0.0
OLDS, RICHARD R.	FARQUHAR, SHARON (FKA, OLI	0	06/24/2019	PTA	21-NOT USED/OTHER		DEED	0.0
OLDS, JAMES H & SHARON	OLDS, JAMES H	0	06/24/2019	QC	06-COURT JUDGEMENT	685/899	DEED	0.0

Property Address

Class: AGRICULTURAL-VACAN Zoning:

School: KINGSLEY AREA SCHOOL

P.R.E. 100% / / Qual. Ag.

:

2024 Est TCV 367,374

Building Permit(s)	Date	Number	Status

Owner's Name/Address

OLDS AARON P & OLDS JUSTIN T
SHERMAN SARAH E & ETAL
22447 N NOTTINGHAM DR
FRANKLIN MI 48025

Improved | X | Vacant

Land Value Estimates for Land Table 1010.AG

Description	Frontage	Depth	* Factors * Front	Depth	Rate	%Adj.	Reason	Value
RIVER LOW	500.00	100.00	1.0000	1.0000	315	100		157,500
AG LAND	80 ACRES		78.02 Acres		2690	100		209,874
AG LAND	ROW		1.98 Acres		0	100		0
500 Actual Front Feet, 81.15 Total Acres							Total Est. Land Value =	367,374

Tax Description

E 1/2 OF SE 1/4 80 A. GW. SEC. 3 T24N R10W -KINGSLEY-

Comments/Influences

	Public Improvements
X	Dirt Road
X	Gravel Road
	Paved Road
	Storm Sewer
	Sidewalk
	Water
	Sewer
X	Electric
	Gas
	Curb
	Street Lights
	Standard Utilities
	Underground Utils.

	Topography of Site
	Level
X	Rolling
	Low
X	High
	Landscaped
	Swamp
X	Wooded
	Pond
	Waterfront
	Ravine
	Wetland
	Flood Plain
X	OPEN

Who	When	What
GLA	10/31/2022	INSPECTION
GLA	06/09/2015	INSPECTED

Year	Land Value	Building Value	Assessed Value	Board of Review	Tribunal/ Other	Taxable Value
2024	183,700	0	183,700			37,604C
2023	152,000	0	152,000			35,814C
2022	137,700	0	137,700			34,109C
2021	116,300	0	116,300			33,020C

The Equalizer. Copyright (c) 1999 - 2009.
Licensed To: Township of Greenwood, County of Wexford, Michigan

*** Information herein deemed reliable but not guaranteed***

Parcel Number: 2410-03-4201 Jurisdiction: GREENWOOD TWP County: WEXFORD Printed on 02/15/2024

Grantor	Grantee	Sale Price	Sale Date	Inst. Type	Terms of Sale	Liber & Page	Verified By	Prcnt. Trans.

Property Address	Class: AGRICULTURAL-VACAN	Zoning:	Building Permit(s)	Date	Number	Status
	School: KINGSLEY AREA SCHOOL					
Owner's Name/Address	P.R.E. 100% / /					
MICHIGAN DEPT OF P O BOX 30735 GRANTS ADMINISTRATION LANSING MI 48909-8235	:					
	2024 Est TCV 203,240					

Tax Description

W 1/2 OF SE 1/4 80 A. GW. SEC. 3 T24N R10W -KINGSLEY- SEE ACT 513 ROLL FOR VALUE

Comments/Influences

	Improved	X	Vacant

	Public Improvements
X	Dirt Road
X	Gravel Road
	Paved Road
	Storm Sewer
	Sidewalk
	Water
	Sewer
X	Electric
	Gas
	Curb
	Street Lights
	Standard Utilities
	Underground Utils.

	Topography of Site
	Level
X	Rolling
	Low
	High
	Landscaped
	Swamp
X	Wooded
	Pond
	Waterfront
	Ravine
	Wetland
	Flood Plain
X	OPEN

Who	When	What
GLA	06/09/2015	INSPECTION

Land Value Estimates for Land Table 4010.LAND VALUES

Description	Frontage	Depth	* Factors * Front	Depth	Rate	%Adj.	Reason	Value
ACREAGE			80.000 Acres		2,541	100		203,240
			80.00 Total Acres		Total Est. Land Value =			203,240

Year	Land Value	Building Value	Assessed Value	Board of Review	Tribunal/ Other	Taxable Value
2024	101,600	0	101,600			25,968C
2023	85,600	0	85,600			24,732C
2022	68,000	0	68,000			23,555C
2021	62,000	0	62,000			22,803C

The Equalizer. Copyright (c) 1999 - 2009. Licensed To: Township of Greenwood, County of Wexford, Michigan

*** Information herein deemed reliable but not guaranteed***

Parcel Number: 2410-04-1101 Jurisdiction: GREENWOOD TWP County: WEXFORD Printed on 02/15/2024

Grantor	Grantee	Sale Price	Sale Date	Inst. Type	Terms of Sale	Liber & Page	Verified By	Prcnt. Trans.
GILFILLAN, CHERYL M. NKA C	CHURBE, CHERYL M & ABRAHAM	0	05/29/2013	QC	21-NOT USED/OTHER	659/2659	DEED	0.0

Property Address

11781 N 31 RD

Owner's Name/Address

CHURBE, CHERYL M & ABRAHAM S
11781 N 31 RD
KINGSLEY MI 49649

Tax Description

E 1/2 OF FRL NE 1/4 OF NE 1/4 EXC W 6 RDS THEREOF & EXC PARCEL COM AT NE COR OF SEC; W 323.3 FT; S 250 FT TO POB: S 750 FT; W 232.32 FT; N 750 FT; E 232.32 FT TO POB. SUB TO EASMT 16.15 A M/L-- GW. SEC. 4 T24N R10W -KINGSLEY-

Comments/Influences

The Equalizer. Copyright (c) 1999 - 2009. Licensed To: Township of Greenwood, County of Wexford, Michigan

Class: RESIDENTIAL-IMPROV Zoning:

School: KINGSLEY AREA SCHOOL

P.R.E. 100% / /

:

2024 Est TCV 48,866 TCV/TFA: 0.00

Building Permit(s)	Date	Number	Status
OTHER	11/18/2021	PB21-0276	COMPLETE
RESIDENTIAL - REMODEL	10/06/2005	PM8677	
MOBILE HOME	11/02/2004	PM8077	
RESIDENTIAL - NEW	10/06/2004	PE16499	

X Improved | Vacant

Public Improvements

- Dirt Road
- X Gravel Road
- Paved Road
- Storm Sewer
- Sidewalk
- Water
- Sewer
- X Electric
- Gas
- Curb
- Street Lights
- Standard Utilities
- Underground Utils.

Topography of Site

- X Level
- X Rolling
- Low
- High
- Landscaped
- Swamp
- Wooded
- Pond
- Waterfront
- Ravine
- Wetland
- Flood Plain
- X OPEN

Who	When	What
GLA	10/31/2022	INSPECTION
GLA	06/11/2015	INSPECTION

Land Value Estimates for Land Table 4010.LAND VALUES

Description	Frontage	Depth	* Factors * Front	Depth	Rate	%Adj.	Reason	Value
ACREAGE			14.540 Acres		3,291	100		47,848
ROW			1.610 Acres		0	100		0
			16.15 Total Acres		Total Est. Land Value =			47,848

Year	Land Value	Building Value	Assessed Value	Board of Review	Tribunal/ Other	Taxable Value
2024	23,900	500	24,400			7,018C
2023	18,900	400	19,300			6,684C
2022	16,800	300	17,100			6,366C
2021	17,400	400	17,800			6,163C

*** Information herein deemed reliable but not guaranteed***

Building Type

X	Single Family
	Mobile Home
	Town Home
	Duplex
	A-Frame
X	Wood Frame

Building Style: PLAIN

Yr Built	Remodeled
0	0

Condition: Good

Room List

	Basement
	1st Floor
	2nd Floor
	Bedrooms

(1) Exterior

	Wood/Shingle
X	Aluminum/Vinyl
	Brick
X	Insulation

(2) Windows

	Many		Large
X	Avg.	X	Avg.
	Few		Small

	Wood Sash
	Metal Sash
X	Vinyl Sash
	Double Hung
	Horiz. Slide
	Casement
	Double Glass
	Patio Doors
X	Storms & Screens

(3) Roof

X	Gable		Gambrel
	Hip		Mansard
	Flat		Shed

X	Asphalt Shingle

Chimney:

(3) Roof (cont.)

	Eavestrough
X	Insulation
0	Front Overhang
0	Other Overhang

(4) Interior

X	Drywall		Plaster
	Paneled		Wood T&G

Trim & Decoration

	Ex	X	Ord		Min

Size of Closets

	Lg	X	Ord		Small

Doors:		Solid	X	H.C.	

(5) Floors

Kitchen:
Other: Linoleum
Other: Carpeted

(6) Ceilings

X	Drywall

(7) Excavation

Basement: 0 S.F.
Crawl: 0 S.F.
Slab: 0 S.F.
Height to Joists: 0.0

(8) Basement

	Conc. Block
	Poured Conc.
	Stone
	Treated Wood
	Concrete Floor

(9) Basement Finish

	Recreation SF
	Living SF
	Walkout Doors (B)
	No Floor SF
	Walkout Doors (A)

(10) Floor Support

Joists:
Unsupported Len:
Cntr.Sup:

(11) Heating/Cooling

X	Gas		Oil		Elec.
	Wood		Coal		Steam

	Forced Air w/o Ducts
	Forced Air w/ Ducts
	Forced Hot Water
	Electric Baseboard
	Elec. Ceil. Radiant
	Radiant (in-floor)
	Electric Wall Heat
	Space Heater
	Wall/Floor Furnace
	Forced Heat & Cool
	Heat Pump
X	No Heating/Cooling

	Central Air
	Wood Furnace

(12) Electric

150	Amps Service

No./Qual. of Fixtures

	Ex.	X	Ord.		Min

No. of Elec. Outlets

	Many	X	Ave.		Few

(13) Plumbing

	Average Fixture(s)
1	3 Fixture Bath
	2 Fixture Bath
	Softener, Auto
	Softener, Manual
	Solar Water Heat
	No Plumbing
	Extra Toilet
	Extra Sink
	Separate Shower
	Ceramic Tile Floor
	Ceramic Tile Wains
	Ceramic Tub Alcove
	Vent Fan

(14) Water/Sewer

	Public Water
	Public Sewer
	Water Well
	1000 Gal Septic
	2000 Gal Septic

Lump Sum Items:

(15) Built-ins

	Appliance Allow.
	Cook Top
	Dishwasher
	Garbage Disposal
	Bath Heater
	Vent Fan
	Hot Tub
	Unvented Hood
	Vented Hood
	Intercom
	Jacuzzi Tub
	Jacuzzi repl.Tub
	Oven
	Microwave
	Standard Range
	Self Clean Range
	Sauna
	Trash Compactor
	Central Vacuum
	Security System

(15) Fireplaces

	Interior 1 Story
	Interior 2 Story
	2nd/Same Stack
	Two Sided
	Exterior 1 Story
	Exterior 2 Story
	Prefab 1 Story
	Prefab 2 Story
	Heat Circulator
	Raised Hearth
	Wood Stove
	Direct-Vented Gas

Class: D
Effec. Age: 63
Floor Area: 0
Total Base New : 14,376 E.C.F.
Total Depr Cost: 785 X 1.297
Estimated T.C.V: 1,018

(16) Porches/Decks

Area	Type

(17) Garage

Year Built:
Car Capacity:
Class: D
Exterior: Siding
Brick Ven.: 0
Stone Ven.: 0
Common Wall: Detache
Foundation: 18 Inch
Finished ?:
Auto. Doors: 0
Mech. Doors: 0
Area: 600
% Good: 17
Storage Area: 0
No Conc. Floor: 600

Bsmnt Garage:

Carport Area:
Roof:

Cost Est. for Res. Bldg: 1 Single Family PLAIN Cls D Blt 0
(11) Heating System: No Heating/Cooling
Ground Area = 0 SF Floor Area = 0 SF.
Phy/Ab.Phy/Func/Econ/Comb. % Good=45/100/100/45/20.25
Building Areas

Stories	Exterior	Foundation	Size	Cost New	Depr. Cost	
Other Additions/Adjustments						
Garages						
Class: D Exterior: Siding Foundation: 18 Inch (Unfinished)						
Base Cost			600	17,742	1,357	*1
No Concrete Floor			600	-3,366	-572	
			Totals:	14,376	785	

Notes:
ECF (RESIDENTIAL) 1.297 => TCV: 1,018

*** Information herein deemed reliable but not guaranteed***

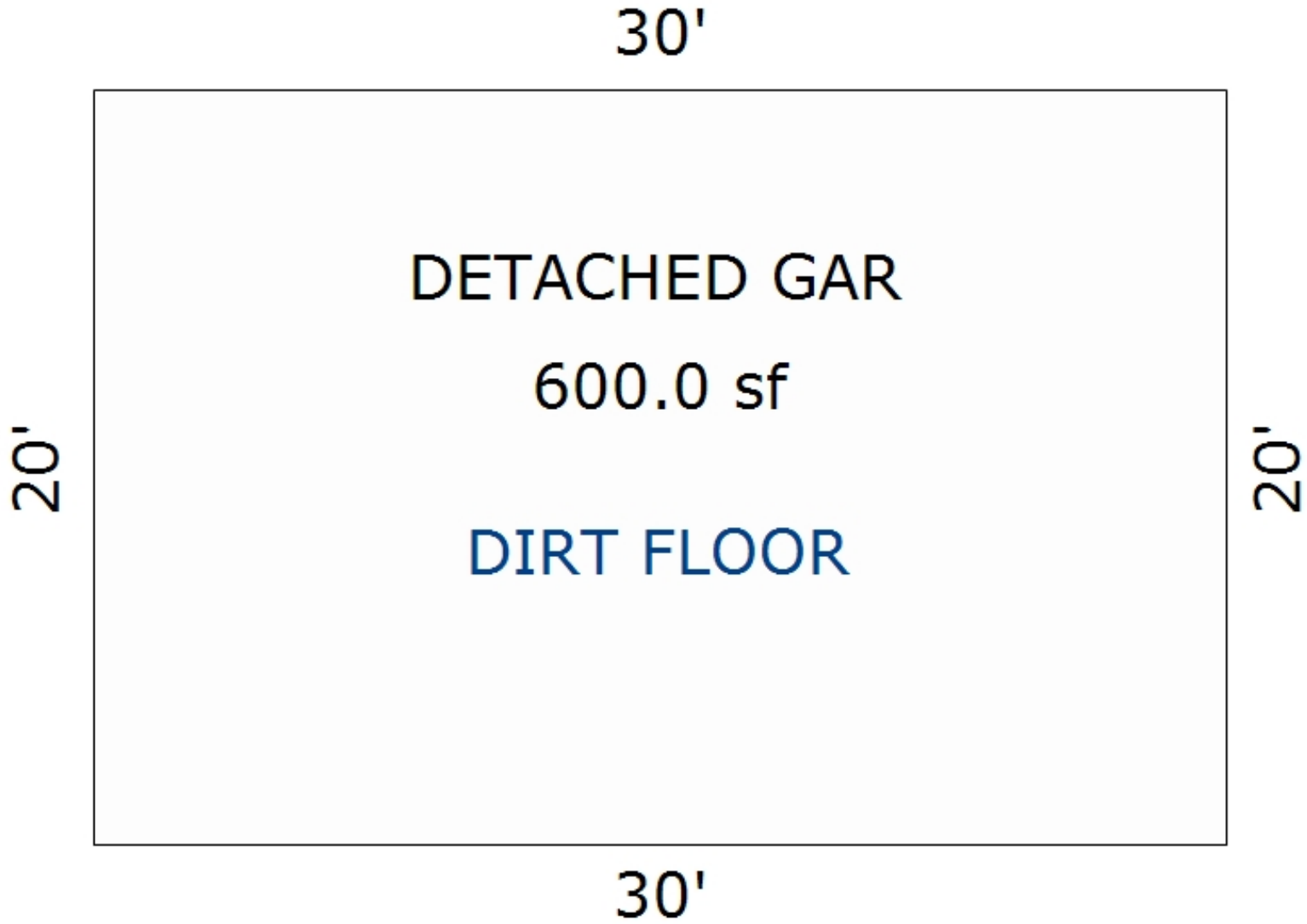

*** Information herein deemed reliable but not guaranteed***

Parcel Number: 2410-04-1102-01 Jurisdiction: GREENWOOD TWP County: WEXFORD Printed on 02/15/2024

Grantor	Grantee	Sale Price	Sale Date	Inst. Type	Terms of Sale	Liber & Page	Verified By	Prcnt. Trans.
NORTH, PAUL O & ISABELLE	NORTH, PAUL O TRUST	0	11/11/2021	QC	14-INTO/OUT OF TRUST	691/1680	DEED	0.0
DAYS, AUDREY L	NORTH, PAUL O & ISABELLE	103,000	12/09/2016	WD	03-ARM'S LENGTH	679 /368	DEED	100.0

Property Address

2872 E COUNTY LINE RD

Owner's Name/Address

NORTH, PAUL O TRUST
2872 E COUNTY LINE RD
KINGSLEY MI 49649

Tax Description

COM NE COR SEC; W 555.62 FT TO POB; W 270 FT; S 360.00 FT; E 270.00 FT; N 360.00 FT TO POB. 2.23 A M/L
GW. SEC. 4 T24N R10W -KINGSLEY
SPLIT ON 12/29/2016 FROM 2410-04-1102;

Comments/Influences

Split/Comb. on 01/23/2017 completed 01/23/2017 JAY ;
Parent Parcel(s): 2410-04-1102;
Child Parcel(s): 2410-04-1102-01,

The Equalizer. Copyright (c) 1999 - 2009.
Licensed To: Township of Greenwood, County of Wexford, Michigan

Class: RESIDENTIAL-IMPROV Zoning:
School: KINGSLEY AREA SCHOOL
P.R.E. 100% 01/03/2017
:
2024 Est TCV 372,760 TCV/TFA: 119.47

Building Permit(s)	Date	Number	Status

X Improved | Vacant

Public Improvements

- Dirt Road
- Gravel Road
- Paved Road
- Storm Sewer
- Sidewalk
- Water
- Sewer
- Electric
- Gas
- Curb
- Street Lights
- Standard Utilities
- Underground Utils.

Topography of Site

- Level
- Rolling
- Low
- High
- Landscaped
- Swamp
- Wooded
- Pond
- Waterfront
- Ravine
- Wetland
- Flood Plain

Who	When	What
GLA	10/31/2022	INSPECTION

Land Value Estimates for Land Table 4010.LAND VALUES

Description	Frontage	Depth	* Factors * Front	Depth	Rate	%Adj.	Reason	Value
	270.00	360.00	1.0000	0.0000	0	100*		0
ACREAGE			2.010 Acres		5,546	100		11,147
ROW			0.220 Acres		0	100		0

* denotes lines that do not contribute to the total acreage calculation.
270 Actual Front Feet, 2.23 Total Acres Total Est. Land Value = 11,147

Land Improvement Cost Estimates

Description	Rate	Size	% Good	Cash Value
D/W/P: 3.5 Concrete	6.63	36	68	163
Wood Frame	26.52	160	68	2,885
Total Estimated Land Improvements True Cash Value =				3,048

Year	Land Value	Building Value	Assessed Value	Board of Review	Tribunal/ Other	Taxable Value
2024	5,600	180,800	186,400			122,043C
2023	5,500	147,800	153,300			116,232C
2022	4,500	124,900	129,400			110,698C
2021	4,900	123,600	128,500			107,162C

*** Information herein deemed reliable but not guaranteed***

Building Type

X	Single Family
	Mobile Home
	Town Home
	Duplex
	A-Frame
X	Wood Frame

Building Style: TWO STORY

Yr Built	Remodeled
1994	0

Condition: Good

Room List

	Basement
	1st Floor
	2nd Floor
	Bedrooms

(1) Exterior

X	Wood/Shingle
	Aluminum/Vinyl
	Brick
X	Insulation

(2) Windows

X	Many Avg. Few	X	Large Avg. Small

	Wood Sash
	Metal Sash
X	Vinyl Sash
	Double Hung
	Horiz. Slide
	Casement
	Double Glass
	Patio Doors
X	Storms & Screens

(3) Roof

X	Gable		Gambrel
	Hip		Mansard
	Flat		Shed

X	Asphalt Shingle

Chimney:

(3) Roof (cont.)

	Eavestrough
X	Insulation
0	Front Overhang
0	Other Overhang

(4) Interior

X	Drywall Paneled		Plaster Wood T&G

Trim & Decoration

	Ex	X	Ord		Min

Size of Closets

	Lg	X	Ord		Small

Doors:		Solid	X	H.C.	

(5) Floors

Kitchen:
Other: Linoleum
Other: Carpeted

(6) Ceilings

X	Drywall

(7) Excavation

Basement: 0 S.F.
Crawl: 0 S.F.
Slab: 1560 S.F.
Height to Joists: 0.0

(8) Basement

	Conc. Block
	Poured Conc.
	Stone
	Treated Wood
	Concrete Floor

(9) Basement Finish

	Recreation SF
	Living SF
	Walkout Doors (B)
	No Floor SF
	Walkout Doors (A)

(10) Floor Support

Joists:
Unsupported Len:
Cntr.Sup:

(11) Heating/Cooling

X	Gas Wood		Oil Coal		Elec. Steam

	Forced Air w/o Ducts
X	Forced Air w/ Ducts
	Forced Hot Water
	Electric Baseboard
	Elec. Ceil. Radiant
	Radiant (in-floor)
	Electric Wall Heat
	Space Heater
	Wall/Floor Furnace
	Forced Heat & Cool
	Heat Pump
	No Heating/Cooling

	Central Air
	Wood Furnace

(12) Electric

150	Amps Service

No./Qual. of Fixtures

	Ex.	X	Ord.		Min

No. of Elec. Outlets

	Many	X	Ave.		Few

(13) Plumbing

	Average Fixture(s)
2	3 Fixture Bath
	2 Fixture Bath
	Softener, Auto
	Softener, Manual
	Solar Water Heat
	No Plumbing
	Extra Toilet
	Extra Sink
	Separate Shower
	Ceramic Tile Floor
	Ceramic Tile Wains
	Ceramic Tub Alcove
	Vent Fan

(14) Water/Sewer

	Public Water
	Public Sewer
1	Water Well
1	1000 Gal Septic
	2000 Gal Septic

Lump Sum Items:

(15) Built-ins

	Appliance Allow.
	Cook Top
	Dishwasher
	Garbage Disposal
	Bath Heater
	Vent Fan
	Hot Tub
	Unvented Hood
	Vented Hood
	Intercom
	Jacuzzi Tub
	Jacuzzi repl.Tub
	Oven
	Microwave
	Standard Range
	Self Clean Range
	Sauna
	Trash Compactor
	Central Vacuum
	Security System

(15) Fireplaces

	Interior 1 Story
	Interior 2 Story
	2nd/Same Stack
	Two Sided
	Exterior 1 Story
	Exterior 2 Story
	Prefab 1 Story
	Prefab 2 Story
	Heat Circulator
	Raised Hearth
	Wood Stove
	Direct-Vented Gas

Class: C
Effec. Age: 29
Floor Area: 3,120
Total Base New : 389,376 E.C.F.
Total Depr Cost: 276,457 X 1.297
Estimated T.C.V: 358,565

(16) Porches/Decks

Area	Type
176	WGEP (1 Story)
40	CCP (1 Story)
9	WPP
28	WPP
64	Treated Wood
72	Treated Wood

(17) Garage

Year Built:
Car Capacity:
Class: C
Exterior: Pole
Brick Ven.: 0
Stone Ven.: 0
Common Wall: Detache
Foundation: 18 Inch
Finished ?:
Auto. Doors: 0
Mech. Doors: 0
Area: 1200
% Good: 0
Storage Area: 0
No Conc. Floor: 0

Bsmnt Garage:

Carport Area:
Roof:

Cost Est. for Res. Bldg: 1 Single Family TWO STORY Cls C Blt 1994
(11) Heating System: Forced Air w/ Ducts
Ground Area = 1560 SF Floor Area = 3120 SF.
Phy/Ab.Phy/Func/Econ/Comb. % Good=71/100/100/100/71
Building Areas

Stories	Exterior	Foundation	Size	Cost New	Depr. Cost
2 Story	Siding	Slab	1,560		
			Total:	323,319	229,556
Other Additions/Adjustments					
Plumbing					
3 Fixture Bath			1	4,678	3,321
Water/Sewer					
1000 Gal Septic			1	4,899	3,478
Water Well, 100 Feet			1	5,849	4,153
Porches					
WGEP (1 Story)			176	14,032	9,963
CCP (1 Story)			40	1,270	902
WPP			28	1,494	1,061
WPP			9	480	341
Deck					
Treated Wood			64	2,040	1,448
Treated Wood			72	2,155	1,530
Garages					
Class: C Exterior: Pole (Unfinished)					
Base Cost			1200	29,160	20,704
			Totals:	389,376	276,457

Notes:

ECF (RESIDENTIAL) 1.297 => TCV: 358,565

*** Information herein deemed reliable but not guaranteed***

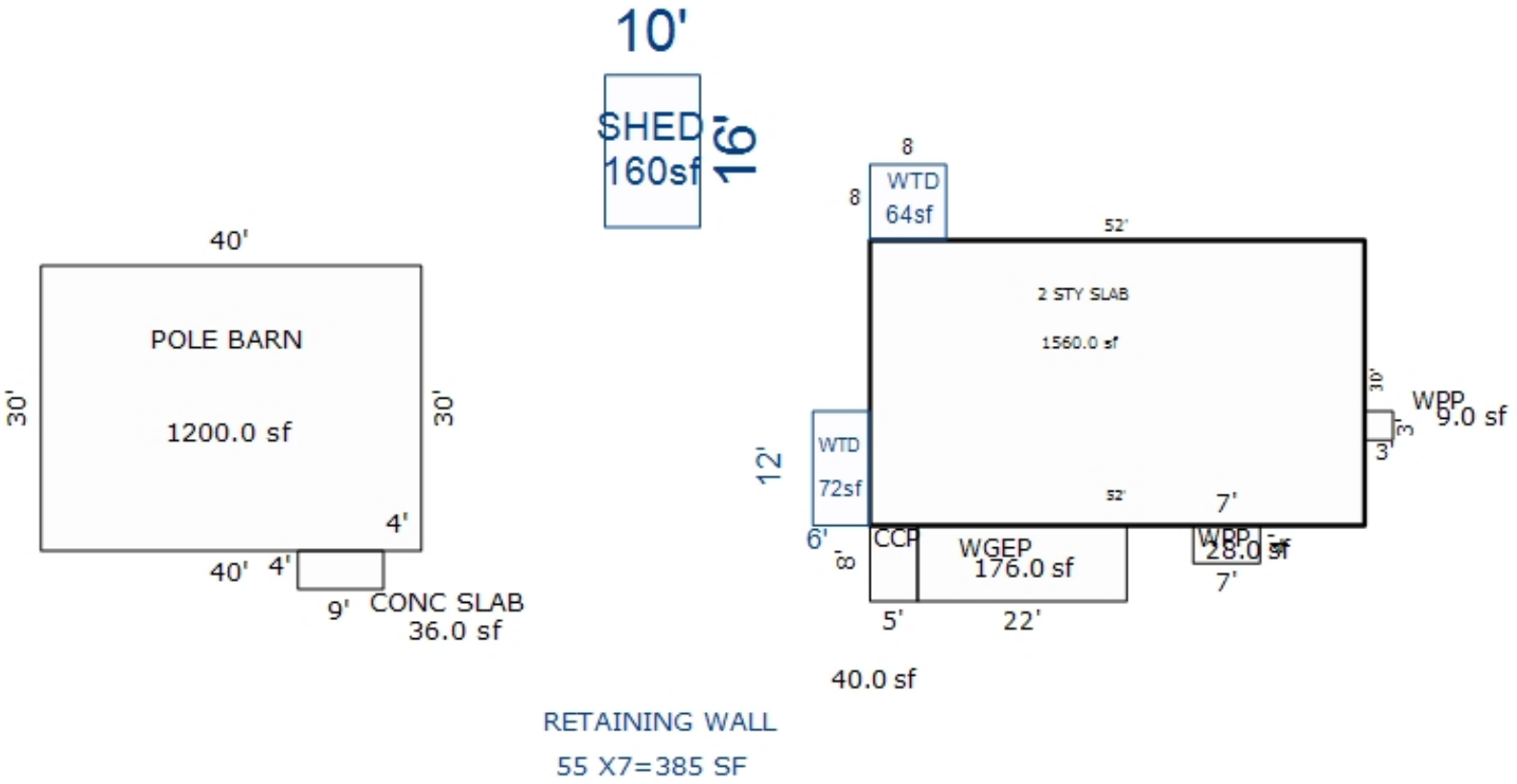

*** Information herein deemed reliable but not guaranteed***

Parcel Number: 2410-04-1102-02 Jurisdiction: GREENWOOD TWP County: WEXFORD Printed on 02/15/2024

Grantor	Grantee	Sale Price	Sale Date	Inst. Type	Terms of Sale	Liber & Page	Verified By	Prcnt. Trans.
DAYS, AUDREY L & NORTH, PA	NORTH, PAUL O TRUST	0	11/11/2021	QC	21-NOT USED/OTHER	691/1679	DEED	0.0
DAYS, AUDREY L.	DAYS, AUDREY L & NORTH, PA	0	05/25/2017	QC	21-NOT USED/OTHER	680/1022	DEED	0.0

Property Address

2872 E COUNTY LINE RD

Owner's Name/Address

NORTH, PAUL O TRUST
3444 E COUNTY LINE RD
KINGSLEY MI 49649

Class: RESIDENTIAL-VACANT Zoning:

School: KINGSLEY AREA SCHOOL

P.R.E. 100% 01/03/2017

:

2024 Est TCV 64,713

Building Permit(s)	Date	Number	Status

Improved | X | Vacant

Public Improvements

Dirt Road
Gravel Road
Paved Road
Storm Sewer
Sidewalk
Water
Sewer
Electric
Gas
Curb
Street Lights
Standard Utilities
Underground Utils.

Topography of Site

Level
Rolling
Low
High
Landscaped
Swamp
Wooded
Pond
Waterfront
Ravine
Wetland
Flood Plain

Who When What

GLA 10/31/2022 INSPECTION

Land Value Estimates for Land Table 4010.LAND VALUES

Description	Frontage	Depth	* Factors * Front	Depth	Rate	%Adj.	Reason	Value
ACREAGE			20.880 Acres		3,099	100		64,713
ROW			0.380 Acres		0	100		0
			21.26 Total Acres		Total Est. Land Value =			64,713

Tax Description

COM AT NE COR OF SEC; W 555.62 FT TO POB: W 753.64 FT; S 1587.58 FT; E 428.79 FT; N 527.65 FT; E 330FT; N 1058.81 FT TO POB EXC COM NE COR SEC; W 555.62 FT TO POB; W 270 FT; S 360.00 FT; E 270.00 FT; N 360.00 FT TO POB, 21.26 A M/L GW. SEC. 4 T24N R10W -KINGSLEY-
SPLIT ON 12/29/2016 FROM 2410-04-1102;

Comments/Influences

Split/Comb. on 01/23/2017 completed 01/23/2017 JAY ;
Parent Parcel(s): 2410-04-1102;
Child Parcel(s): 2410-04-1102-01, 2410-04-1102-02;

Year	Land Value	Building Value	Assessed Value	Board of Review	Tribunal/ Other	Taxable Value
2024	32,400	0	32,400			19,850C
2023	26,900	0	26,900			18,905C
2022	23,000	0	23,000			18,005C
2021	20,900	0	20,900			17,430C

The Equalizer. Copyright (c) 1999 - 2009. Licensed To: Township of Greenwood, County of Wexford, Michigan

*** Information herein deemed reliable but not guaranteed***

Parcel Number: 2410-04-1103 Jurisdiction: GREENWOOD TWP County: WEXFORD Printed on 02/15/2024

Grantor	Grantee	Sale Price	Sale Date	Inst. Type	Terms of Sale	Liber & Page	Verified By	Prcnt. Trans.
CHURBE, CHERYL M	CHURBE, CHERYL M & ABRAHAN	0	05/29/2013	QC	21-NOT USED/OTHER	659/2659	DEED	0.0
GILFILLAN, CHERYL M	CHURBE, CHERYL M	0	09/04/2009	QC	09-FAMILY	624/958	DEED	0.0
DAYS, PERRY & AUDREY	GILFILLAN, CHERYL	4,500	08/12/2004	WD	08-ESTATE	560:768	DEED	0.0
DAYS, PERRY & AUDREY	GILFILLAN, CHERYL	4,500	11/21/2001	LC	03-ARM'S LENGTH	500:673	DEED	0.0

Property Address

Owner's Name/Address

CHURBE, CHERYL M & ABRAHAM S
11781 N 31 RD
KINGSLEY MI 49649

Tax Description

BEG AT NE COR OF SEC; W 555.62 FT; S 1050.81 FT TO POB: W 330 FT; S 527.65 FT; E 330 FT; N TO POB. --3.99 A M/L-- GW SEC 4 T24N R10W -KINGSLEY- [[ASSESSED W/ 04-1102 '03

Comments/Influences

The Equalizer. Copyright (c) 1999 - 2009.
Licensed To: Township of Greenwood, County of Wexford, Michigan

Class: RESIDENTIAL-IMPROV Zoning:
School: KINGSLEY AREA SCHOOL
P.R.E. 100% / /
:
2024 Est TCV 195,207 TCV/TFA: 112.97

Building Permit(s)	Date	Number	Status

X Improved | Vacant

	Public Improvements
	Dirt Road
X	Gravel Road
	Paved Road
	Storm Sewer
	Sidewalk
	Water
	Sewer
X	Electric
	Gas
	Curb
	Street Lights
	Standard Utilities
	Underground Utils.

	Topography of Site
X	Level
X	Rolling
	Low
	High
	Landscaped
	Swamp
	Wooded
	Pond
	Waterfront
	Ravine
	Wetland
	Flood Plain
X	OPEN

Who	When	What
GLA	10/31/2022	INSPECTION
GLA	08/26/2015	INSPECTION

Land Value Estimates for Land Table 4010.LAND VALUES

Description	Frontage	Depth	* Factors * Front	Depth	Rate	%Adj.	Reason	Value
HELSEL RIV LOW	527.65	330.00	1.0000	0.0000	315	100*		0
ACREAGE			3.990 Acres		5,034	100		20,085

* denotes lines that do not contribute to the total acreage calculation.
528 Actual Front Feet, 3.99 Total Acres Total Est. Land Value = 20,085

Land Improvement Cost Estimates

Description	Rate	Size	% Good	Cash Value
D/W/P: 4in Concrete	7.01	546	27	1,033
D/W/P: 4in Concrete	7.01	708	27	1,340
Total Estimated Land Improvements True Cash Value =				2,373

Year	Land Value	Building Value	Assessed Value	Board of Review	Tribunal/ Other	Taxable Value
2024	10,000	87,600	97,600			61,692C
2023	9,400	73,700	83,100			58,755C
2022	7,000	63,500	70,500			55,958C
2021	8,400	57,800	66,200			54,171C

*** Information herein deemed reliable but not guaranteed***

Building Type

	Single Family
X	Mobile Home
	Town Home
	Duplex
	A-Frame

X	Wood Frame

Building Style: RANCH

Yr Built	Remodeled
2004	0

Condition: Average

Room List

	Basement
	1st Floor
	2nd Floor
	Bedrooms

(1) Exterior

X	Wood/Shingle
	Aluminum/Vinyl
	Brick
	Insulation

(2) Windows

X	Many Avg. Few	X	Large Avg. Small

	Wood Sash
	Metal Sash
	Vinyl Sash
	Double Hung
	Horiz. Slide
	Casement
	Double Glass
	Patio Doors
	Storms & Screens

(3) Roof

X	Gable		Gambrel
	Hip		Mansard
	Flat		Shed

X	Asphalt Shingle

Chimney: Brick

(3) Roof (cont.)

	Eavestrough
	Insulation
0	Front Overhang
0	Other Overhang

(4) Interior

	Drywall		Plaster
	Paneled		Wood T&G

Trim & Decoration

	Ex	X	Ord		Min

Size of Closets

	Lg	X	Ord		Small

Doors:		Solid	X	H.C.	

(5) Floors

Kitchen:
Other:
Other:

(6) Ceilings

(7) Excavation

Basement: 1728 S.F.
Crawl: 0 S.F.
Slab: 0 S.F.
Height to Joists: 0.0

(8) Basement

	Conc. Block
	Poured Conc.
	Stone
	Treated Wood
	Concrete Floor

(9) Basement Finish

	Recreation	SF
	Living	SF
1	Walkout Doors (B)	
	No Floor	SF
	Walkout Doors (A)	

(10) Floor Support

Joists:
Unsupported Len:
Cntr.Sup:

(11) Heating/Cooling

X	Gas		Oil		Elec.
	Wood		Coal		Steam

X	Forced Warm Air
	Wall Furnace
	Warm & Cool Air
	Heat Pump

X	Central Air
	Wood Furnace

(12) Electric

0	Amps Service

No./Qual. of Fixtures

	Ex.	X	Ord.		Min

No. of Elec. Outlets

	Many	X	Ave.		Few

(13) Plumbing

2	Average Fixture(s)
	3 Fixture Bath
	2 Fixture Bath
	Softener, Auto
	Softener, Manual
	Solar Water Heat
	No Plumbing
	Extra Toilet
	Extra Sink
	Separate Shower
	Ceramic Tile Floor
	Ceramic Tile Wains
	Ceramic Tub Alcove
	Vent Fan

(14) Water/Sewer

	Public Water
	Public Sewer
1	Water Well
1	1000 Gal Septic
	2000 Gal Septic

Lump Sum Items:

(15) Built-ins

	Appliance Allow.
	Cook Top
	Dishwasher
	Garbage Disposal
	Bath Heater
	Vent Fan
	Hot Tub
	Unvented Hood
	Vented Hood
	Intercom
	Jacuzzi Tub
	Jacuzzi repl.Tub
	Oven
	Microwave
	Standard Range
	Self Clean Range
	Sauna
	Trash Compactor
	Central Vacuum
	Security System

(15) Fireplaces

	Interior 1 Story
	Interior 2 Story
	2nd/Same Stack
	Two Sided
	Exterior 1 Story
	Exterior 2 Story
	Prefab 1 Story
	Prefab 2 Story
	Heat Circulator
	Raised Hearth
	Wood Stove
	Direct-Vented Gas

Class: Average
Effec. Age: 21
Floor Area:
Total Base New : 233,834 E.C.F.
Total Depr Cost: 123,930 X 1.297
Estimated T.C.V: 160,737

(16) Porches/Decks

Area	Type
24	WPP
24	WPP

(17) Garage

Year Built:
Car Capacity:
Class: C
Exterior: Siding
Brick Ven.: 0
Stone Ven.: 0
Common Wall: 1 Wall
Foundation: 42 Inch
Finished ?:
Auto. Doors: 0
Mech. Doors: 0
Area: 810
% Good: 0
Storage Area: 0
No Conc. Floor: 0

Bsmnt Garage:

Carport Area:
Roof:

Cost Est. for Res. Bldg: 1 Mobile Home RANCH Cls Average Blt 2004
(11) Heating System: Forced Warm Air, Air Conditioning
Ground Area = 1728 SF Floor Area = 1728 SF.
Phy/Ab.Phy/Func/Econ/Comb. % Good=53/100/100/100/53
Building Areas

Type	Ext. Walls	Roof/Fnd.	Size	Cost New	Depr. Cost
Main Home	Siding	Comp.Shingle	1728		
Basement	Concrete, 6"		1728		
			Total:	147,683	78,272
Other Additions/Adjustments					
Basement, Outside Entrance, Below Grade			1	2,578	1,366
Plumbing					
3 Fixture Bath			1	3,075	1,630
Water/Sewer					
1000 Gal Septic			1	4,899	2,596
Water Well, 100 Feet			1	5,849	3,100
Garages					
Class: C Exterior: Siding Foundation: 42 Inch (Unfinished)					
Base Cost			810	31,639	16,769
Common Wall: 1 Wall			1	-2,705	-1,434
Class: C Exterior: Siding Foundation: 18 Inch (Unfinished)					
Base Cost			966	32,825	17,397
Concrete Foundation			364	5,431	2,878
Porches					
WPP			24	1,280	678
WPP			24	1,280	678
			Totals:	233,834	123,930

Notes:
ECF (RESIDENTIAL) 1.297 => TCV: 160,737

*** Information herein deemed reliable but not guaranteed***

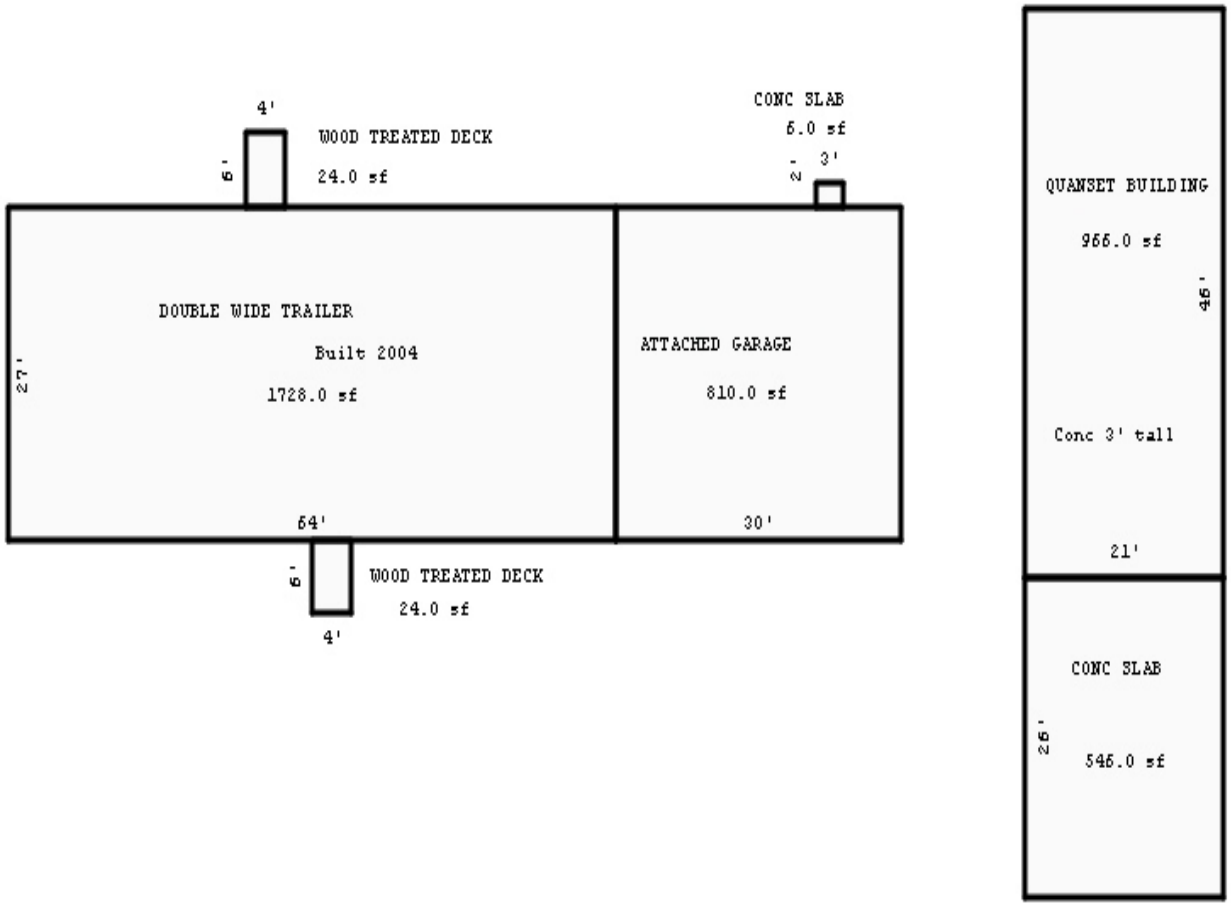

Sketch by Apex Medina™

*** Information herein deemed reliable but not guaranteed***

Building Type	Arch-Rib (Quonset) Farm U				
Year Built					
Class/Construction	S				
Quality/Exterior	Average				
# of Walls, Perimeter	4 Wall, 134				
Height	14				
Heating System	No Heating/Cooling				
Length/Width/Area	46 x 21 = 966				
Cost New	$ 23,957				
Phy./Func./Econ. %Good	53/100/100 53.0				
Depreciated Cost	$ 12,697				
+ Unit-In-Place Items	$ 0				
Description, Size X Rate X %Good = Cost Itemized ->* Unit-In-Place ->* Items ->*					
E.C.F.	X 0.946				
% Good	53				
Est. True Cash Value	$ 12,012				
Comments:					
Total Estimated True Cash Value of Agricultural Improvements / This Card: 12012 / All Cards: 12012					

*** Information herein deemed reliable but not guaranteed***

Parcel Number: 2410-04-1103, Agricultural Building 1 Printed on 02/15/2024

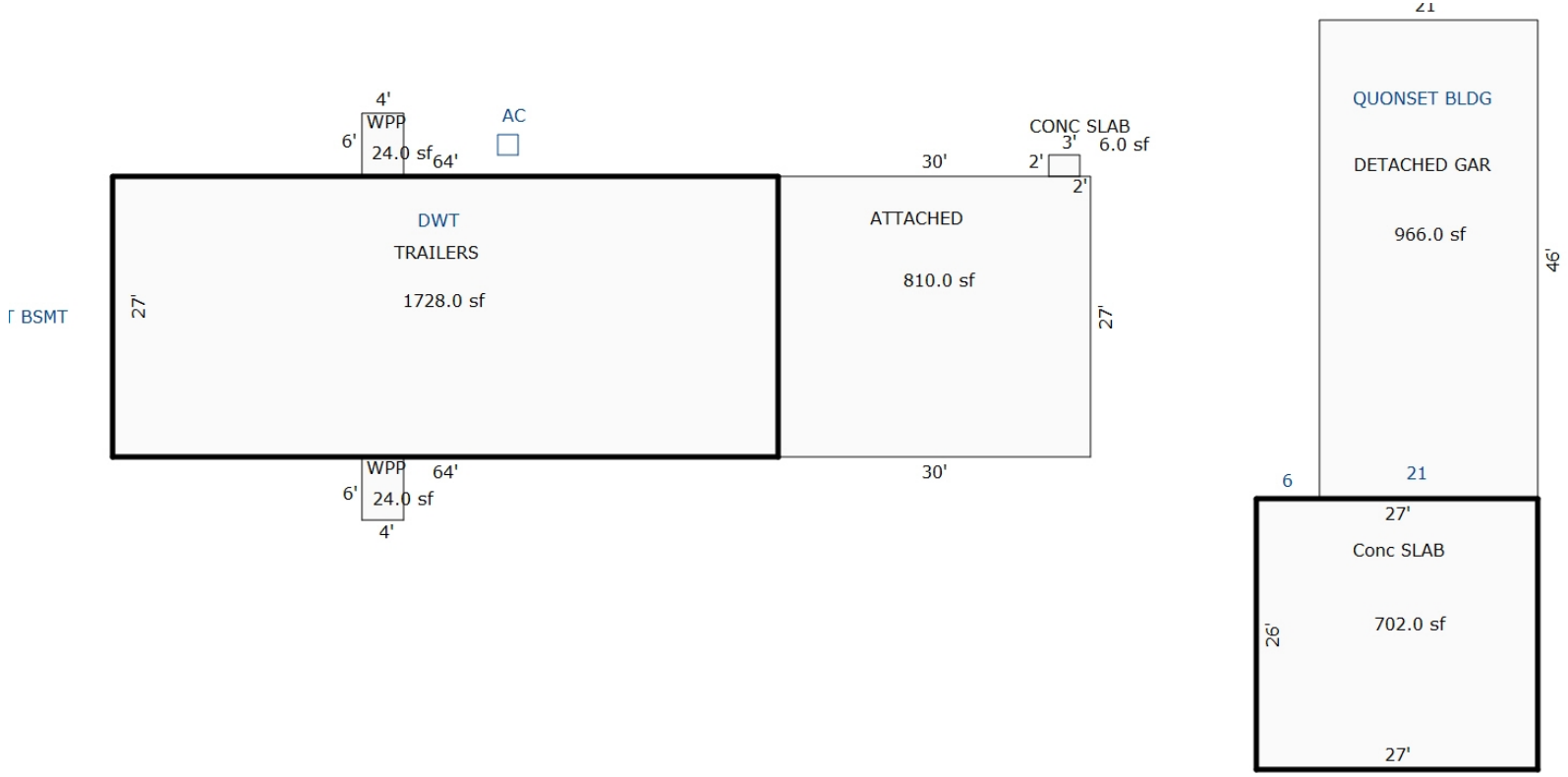

Sketch by Apex Sketch

*** Information herein deemed reliable but not guaranteed***

Parcel Number: 2410-04-1104 Jurisdiction: GREENWOOD TWP County: WEXFORD Printed on 02/15/2024

Grantor	Grantee	Sale Price	Sale Date	Inst. Type	Terms of Sale	Liber & Page	Verified By	Prcnt. Trans.
BUSH, ADAM C	SCHAAF, NICOLE M & ABRAHAM	253,000	05/27/2022	WD	03-ARM'S LENGTH	693/358	DEED	100.0
FOREST AREA FEDERAL CREDIT	BUSH, ADAM C	80,000	03/31/2016	WD	03-ARM'S LENGTH	677/1357	DEED	100.0

Property Address

11907 N 31 RD

Owner's Name/Address

SCHAAF, NICOLE M & ABRAHAM J
11907 N 31 RD
KINGSLEY MI 49649

Class: RESIDENTIAL-IMPROV Zoning:
School: KINGSLEY AREA SCHOOL
P.R.E. 100% 06/15/2022
:
2024 Est TCV 120,941 TCV/TFA: 69.99

Building Permit(s)	Date	Number	Status
RESIDENTIAL - NEW	08/25/2004	PB12413	
RESIDENTIAL - NEW	06/07/2004	PP3474	
RESIDENTIAL - REMODEL	05/12/2004	PE16098	
MOBILE HOME	04/22/2004	PM7516	

Tax Description

PAR 2; COM AT NE COR OF SEC; W 323.3 FT; S 250 FT TO POB: S 750 FT; W 232.32 FT; N 750 FT; E 232.32 FT TO POB. TOG W/ EASMT --4.01 A M/L-- GW SEC 4 T24N R10W -KINGSLEY- [[ASSESSED W/ 04-1101 '04

Comments/Influences

The Equalizer. Copyright (c) 1999 - 2009. Licensed To: Township of Greenwood, County of Wexford, Michigan

X	Improved	
	Vacant	

	Public Improvements
	Dirt Road
X	Gravel Road
	Paved Road
	Storm Sewer
	Sidewalk
	Water
	Sewer
X	Electric
	Gas
	Curb
	Street Lights
	Standard Utilities
	Underground Utils.

	Topography of Site
X	Level
X	Rolling
	Low
	High
	Landscaped
	Swamp
	Wooded
	Pond
	Waterfront
	Ravine
	Wetland
	Flood Plain
X	OPEN

Who	When	What
GLA	10/31/2022	INSPECTION
GLA	08/26/2015	INSPECTION

Land Value Estimates for Land Table 4010.LAND VALUES

Description	Frontage	Depth	* Factors * Front	Depth	Rate	%Adj.	Reason	Value
ACREAGE			4.010 Acres		5,031	100		20,174
			4.01 Total Acres		Total Est. Land Value =			20,174

Year	Land Value	Building Value	Assessed Value	Board of Review	Tribunal/ Other	Taxable Value
2024	10,100	50,400	60,500			54,180C
2023	9,400	42,200	51,600			51,600S
2022	7,000	35,400	42,400			35,755C
2021	8,400	31,400	39,800			34,613C

*** Information herein deemed reliable but not guaranteed***

Building Type

	Single Family
X	Mobile Home
	Town Home
	Duplex
	A-Frame

X	Wood Frame

Building Style: SWT/DWT

Yr Built	Remodeled
2004	0

Condition: Good

Room List

	Basement
	1st Floor
	2nd Floor
	Bedrooms

(1) Exterior

	Wood/Shingle
X	Aluminum/Vinyl
	Brick
X	Insulation

(2) Windows

	Many		Large
X	Avg.	X	Avg.
	Few		Small

	Wood Sash
	Metal Sash
X	Vinyl Sash
	Double Hung
	Horiz. Slide
	Casement
	Double Glass
	Patio Doors
X	Storms & Screens

(3) Roof

X	Gable		Gambrel
	Hip		Mansard
	Flat		Shed

X	Asphalt Shingle

Chimney:

(3) Roof (cont.)

	Eavestrough
X	Insulation
0	Front Overhang
0	Other Overhang

(4) Interior

X	Drywall		Plaster
	Paneled		Wood T&G

Trim & Decoration

	Ex	X	Ord		Min

Size of Closets

	Lg	X	Ord		Small

Doors:		Solid	X	H.C.	

(5) Floors

Kitchen:
Other: Linoleum
Other: Laminate

(6) Ceilings

X	Drywall		

(7) Excavation

Basement: 0 S.F.
Crawl: 0 S.F.
Slab: 0 S.F.
Height to Joists: 0.0

(8) Basement

	Conc. Block
	Poured Conc.
	Stone
	Treated Wood
	Concrete Floor

(9) Basement Finish

	Recreation SF
	Living SF
	Walkout Doors (B)
	No Floor SF
	Walkout Doors (A)

(10) Floor Support

Joists:
Unsupported Len:
Cntr.Sup:

(11) Heating/Cooling

X	Gas		Oil		Elec.
	Wood		Coal		Steam

X	Forced Warm Air
	Wall Furnace
	Warm & Cool Air
	Heat Pump
	Central Air
	Wood Furnace

(12) Electric

150	Amps Service

No./Qual. of Fixtures

	Ex.	X	Ord.		Min

No. of Elec. Outlets

	Many	X	Ave.		Few

(13) Plumbing

2	Average Fixture(s)
	3 Fixture Bath
	2 Fixture Bath
	Softener, Auto
	Softener, Manual
	Solar Water Heat
	No Plumbing
	Extra Toilet
	Extra Sink
	Separate Shower
	Ceramic Tile Floor
	Ceramic Tile Wains
	Ceramic Tub Alcove
	Vent Fan

(14) Water/Sewer

	Public Water
	Public Sewer
1	Water Well
1	1000 Gal Septic
	2000 Gal Septic

Lump Sum Items:

(15) Built-ins

	Appliance Allow.
	Cook Top
	Dishwasher
	Garbage Disposal
	Bath Heater
	Vent Fan
	Hot Tub
	Unvented Hood
	Vented Hood
	Intercom
	Jacuzzi Tub
	Jacuzzi repl.Tub
	Oven
	Microwave
	Standard Range
	Self Clean Range
	Sauna
	Trash Compactor
	Central Vacuum
	Security System

(15) Fireplaces

	Interior 1 Story
	Interior 2 Story
	2nd/Same Stack
	Two Sided
	Exterior 1 Story
	Exterior 2 Story
	Prefab 1 Story
	Prefab 2 Story
	Heat Circulator
	Raised Hearth
	Wood Stove
1	Direct-Vented Gas

Class: Average
Effec. Age: 23
Floor Area:
Total Base New : 158,555 E.C.F.
Total Depr Cost: 77,692 X 1.297
Estimated T.C.V: 100,767

(16) Porches/Decks

Area	Type
104	Treated Wood

(17) Garage

Year Built:
Car Capacity:
Class: C
Exterior: Siding
Brick Ven.: 0
Stone Ven.: 0
Common Wall: 1/2 Wal
Foundation: 42 Inch
Finished ?:
Auto. Doors: 0
Mech. Doors: 0
Area: 784
% Good: 0
Storage Area: 0
No Conc. Floor: 0

Bsmnt Garage:

Carport Area:
Roof:

Cost Est. for Res. Bldg: 1 Mobile Home SWT/DWT Cls Average Blt 2004
(11) Heating System: Forced Warm Air
Ground Area = 1728 SF Floor Area = 1728 SF.
Phy/Ab.Phy/Func/Econ/Comb. % Good=49/100/100/100/49
Building Areas

Type	Ext. Walls	Roof/Fnd.	Size	Cost New	Depr. Cost
Main Home	Siding	Comp.Shingle	1728		
			Total:	104,673	51,289
Other Additions/Adjustments					
Skirting, Precast Conc. Panel			182	4,785	2,345
Plumbing					
3 Fixture Bath			1	3,075	1,507
Water/Sewer					
1000 Gal Septic			1	4,899	2,401
Water Well, 100 Feet			1	5,849	2,866
Deck					
Treated Wood			104	2,654	1,300
Garages					
Class: C Exterior: Siding Foundation: 42 Inch (Unfinished)					
Base Cost			784	30,929	15,155
Common Wall: 1/2 Wall			1	-1,352	-662
Fireplaces					
Direct-Vented Gas			1	3,043	1,491
			Totals:	158,555	77,692

Notes:

ECF (RESIDENTIAL) 1.297 => TCV: 100,767

*** Information herein deemed reliable but not guaranteed***

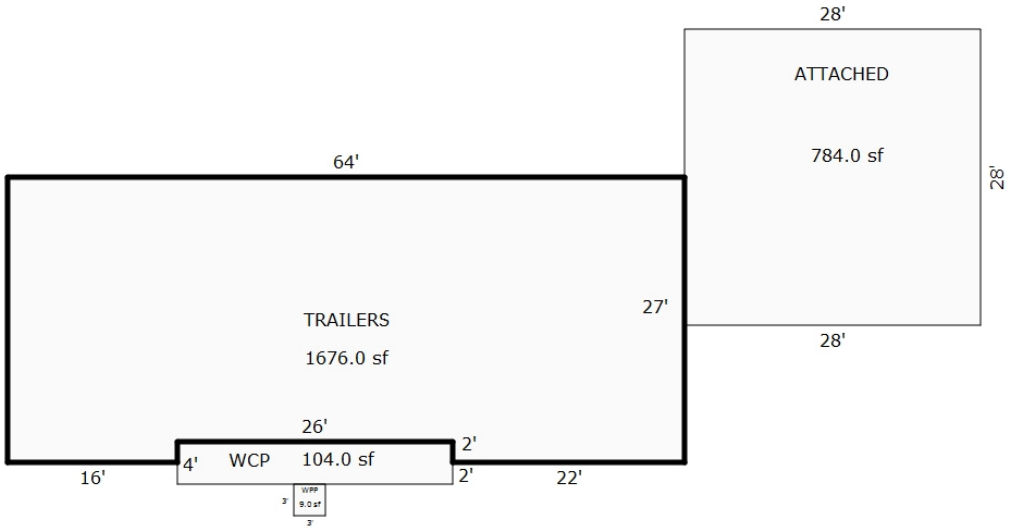

Sketch by Apex Sketch

*** Information herein deemed reliable but not guaranteed***

Parcel Number: 2410-04-1201 Jurisdiction: GREENWOOD TWP County: WEXFORD Printed on 02/15/2024

Grantor	Grantee	Sale Price	Sale Date	Inst. Type	Terms of Sale	Liber & Page	Verified By	Prcnt. Trans.
MARTIN, DEBORAH L & MCKEE,	MCKEE, JASON DALLAS	0	07/19/2021	WD	09-FAMILY	690/1815	DEED	0.0
MCKEE, DONALD E.	MARTIN, DEBORAH L & MCKEE,	0	06/28/2021	OTH	08-ESTATE	690/1644	DEED	0.0

Property Address

2770 E COUNTY LINE RD

Owner's Name/Address

MCKEE, JASON DALLAS
2770 E COUNTY LINE RD
KINGSLEY MI 49649

Tax Description

PAR COM 1309.39 FT W OF NE COR OF SEC. W 174.58 FT; S 1593.42 FT; E 175.96 FT; N 1591.11 FT TO POB. EXC N 249.4 FT THEREOF. --5.4 A M/L-- GW. SEC. 4 T24N R10W -KINGSLEY-

Comments/Influences

Class: RESIDENTIAL-IMPROV Zoning:

School: KINGSLEY AREA SCHOOL

P.R.E. 100% 08/06/2021

:

2024 Est TCV 127,242 TCV/TFA: 78.54

Building Permit(s)	Date	Number	Status

X Improved | Vacant

	Public Improvements
	Dirt Road
	Gravel Road
X	Paved Road
	Storm Sewer
	Sidewalk
	Water
	Sewer
X	Electric
	Gas
	Curb
	Street Lights
	Standard Utilities
	Underground Utils.

	Topography of Site
	Level
X	Rolling
X	Low
	High
	Landscaped
	Swamp
X	Wooded
	Pond
	Waterfront
	Ravine
	Wetland
	Flood Plain

Who When What

JB 10/24/2023 PHOTO
GLA 10/31/2022 INSPECTION
GLA 06/11/2015 INSPECTION

The Equalizer. Copyright (c) 1999 - 2009.
Licensed To: Township of Greenwood, County of Wexford, Michigan

Land Value Estimates for Land Table 4010.LAND VALUES

Description	Frontage	Depth	* Factors * Front	Depth	Rate	%Adj.	Reason	Value
ACREAGE			5.400 Acres		5,112	100		27,605
			5.40 Total Acres			Total Est. Land Value =		27,605

Land Improvement Cost Estimates

Description	Rate	Size	% Good	Cash Value
D/W/P: 4in Concrete	7.01	80	45	252
D/W/P: 4in Concrete	7.01	32	45	101
Total Estimated Land Improvements True Cash Value =				353

Year	Land Value	Building Value	Assessed Value	Board of Review	Tribunal/ Other	Taxable Value
2024	13,800	49,800	63,600			33,265C
2023	11,000	40,100	51,100			31,681C
2022	8,100	33,400	41,500			30,173C
2021	9,200	28,600	37,800			29,210C

*** Information herein deemed reliable but not guaranteed***

Building Type

	Single Family
X	Mobile Home
	Town Home
	Duplex
	A-Frame

X	Wood Frame

Building Style: SWT/DWT

Yr Built	Remodeled
0	0

Condition: Good

Room List

	Basement
	1st Floor
	2nd Floor
	Bedrooms

(1) Exterior

	Wood/Shingle
X	Aluminum/Vinyl
	Brick
X	Insulation

(2) Windows

X	Many		Large
	Avg.	X	Avg.
	Few		Small

	Wood Sash
	Metal Sash
X	Vinyl Sash
	Double Hung
	Horiz. Slide
	Casement
	Double Glass
	Patio Doors
X	Storms & Screens

(3) Roof

X	Gable		Gambrel
	Hip		Mansard
	Flat		Shed

X	Asphalt Shingle

Chimney:

(3) Roof (cont.)

	Eavestrough
X	Insulation
0	Front Overhang
0	Other Overhang

(4) Interior

X	Drywall		Plaster
	Paneled		Wood T&G

Trim & Decoration

	Ex	X	Ord		Min

Size of Closets

	Lg	X	Ord		Small

Doors:		Solid	X	H.C.	

(5) Floors

Kitchen:
Other: Linoleum
Other: Carpeted

(6) Ceilings

X	Drywall		

(7) Excavation

Basement: 0 S.F.
Crawl: 0 S.F.
Slab: 0 S.F.
Height to Joists: 0.0

(8) Basement

	Conc. Block
	Poured Conc.
	Stone
	Treated Wood
	Concrete Floor

(9) Basement Finish

	Recreation SF
	Living SF
	Walkout Doors (B)
	No Floor SF
	Walkout Doors (A)

(10) Floor Support

Joists:
Unsupported Len:
Cntr.Sup:

(11) Heating/Cooling

X	Gas		Oil		Elec.
	Wood		Coal		Steam

X	Forced Warm Air
	Wall Furnace
	Warm & Cool Air
	Heat Pump
	Central Air
	Wood Furnace

(12) Electric

150	Amps Service

No./Qual. of Fixtures

	Ex.	X	Ord.		Min

No. of Elec. Outlets

	Many	X	Ave.		Few

(13) Plumbing

	Average Fixture(s)
2	3 Fixture Bath
	2 Fixture Bath
	Softener, Auto
	Softener, Manual
	Solar Water Heat
	No Plumbing
	Extra Toilet
	Extra Sink
	Separate Shower
	Ceramic Tile Floor
	Ceramic Tile Wains
	Ceramic Tub Alcove
	Vent Fan

(14) Water/Sewer

	Public Water
	Public Sewer
1	Water Well
1	1000 Gal Septic
	2000 Gal Septic

Lump Sum Items:

(15) Built-ins

	Appliance Allow.
	Cook Top
	Dishwasher
	Garbage Disposal
	Bath Heater
	Vent Fan
	Hot Tub
	Unvented Hood
	Vented Hood
	Intercom
	Jacuzzi Tub
	Jacuzzi repl.Tub
	Oven
	Microwave
	Standard Range
	Self Clean Range
	Sauna
	Trash Compactor
	Central Vacuum
	Security System

(15) Fireplaces

	Interior 1 Story
	Interior 2 Story
	2nd/Same Stack
	Two Sided
	Exterior 1 Story
	Exterior 2 Story
1	Prefab 1 Story
	Prefab 2 Story
	Heat Circulator
	Raised Hearth
	Wood Stove
	Direct-Vented Gas

Class: Average
Effec. Age: 24
Floor Area:
Total Base New : 162,870 E.C.F.
Total Depr Cost: 76,549 X 1.297
Estimated T.C.V: 99,284

(16) Porches/Decks

Area	Type
270	WPP

(17) Garage

Year Built:
Car Capacity:
Class: C
Exterior: Pole
Brick Ven.: 0
Stone Ven.: 0
Common Wall: Detache
Foundation: 18 Inch
Finished ?:
Auto. Doors: 0
Mech. Doors: 0
Area: 1200
% Good: 0
Storage Area: 0
No Conc. Floor: 0

Bsmnt Garage:

Carport Area:
Roof:

Cost Est. for Res. Bldg: 1 Mobile Home SWT/DWT Cls Average Blt 0
(11) Heating System: Forced Warm Air
Ground Area = 1620 SF Floor Area = 1620 SF.
Phy/Ab.Phy/Func/Econ/Comb. % Good=47/100/100/100/47
Building Areas

Type	Ext. Walls	Roof/Fnd.	Size	Cost New	Depr. Cost
Main Home	Siding	Comp.Shingle	1620		
			Total:	100,734	47,345
Other Additions/Adjustments					
42" frost-free footings, foundation			174	10,336	4,858
Plumbing					
3 Fixture Bath			1	3,075	1,445
Water/Sewer					
1000 Gal Septic			1	4,899	2,303
Water Well, 100 Feet			1	5,849	2,749
Porches					
WPP			270	6,207	2,917
Fireplaces					
Prefab 1 Story			1	2,610	1,227
Garages					
Class: C Exterior: Pole (Unfinished)					
Base Cost			1200	29,160	13,705
			Totals:	162,870	76,549

Notes:
ECF (RESIDENTIAL) 1.297 => TCV: 99,284

*** Information herein deemed reliable but not guaranteed***

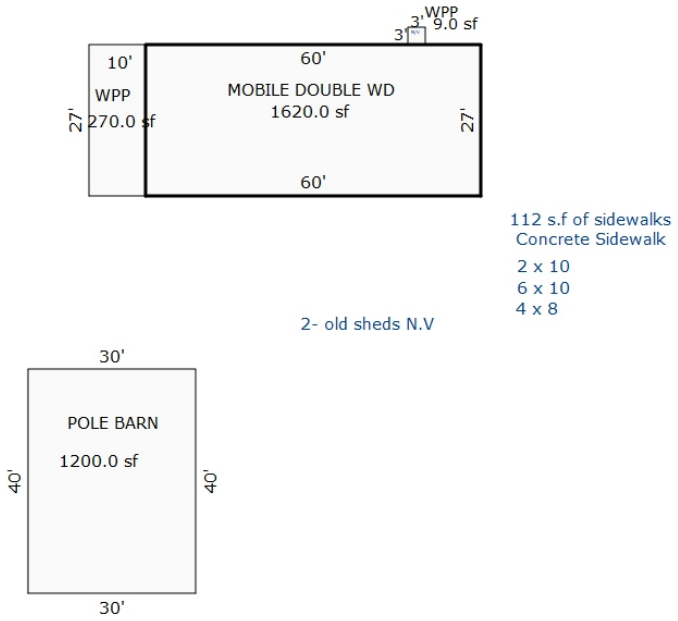

Sketch by Apex Sketch

*** Information herein deemed reliable but not guaranteed***

Parcel Number: 2410-04-1202 Jurisdiction: GREENWOOD TWP County: WEXFORD Printed on 02/15/2024

Grantor	Grantee	Sale Price	Sale Date	Inst. Type	Terms of Sale	Liber & Page	Verified By	Prcnt. Trans.
MCKEE, DONALD ALLEN	MCKEE, DONALD A & WENDY L	100	11/08/2022	QC	20-MULTI PARCEL SALE REF	694/732	DEED	0.0
MCKEE, VIVIAN	MCKEE, DONALD ALLEN	0	06/28/2021	OTH	08-ESTATE	690/1645	DEED	0.0

Property Address

2728 COUNTY LINE RD

Owner's Name/Address

MCKEE, DONALD A & WENDY L
2728 COUNTY LINE RD
KINGSLEY MI 49649

Tax Description

PAR COM 1483.97 FT W OF NE COR OF SEC: W 261.88 FT; S 798.45 FT; E 262.91 FT; N 796.71 FT TO POB. SUB TO EASMNT 4.82 A. M/L GW. SEC. 4 T24N R10W -KINGSLEY-

Comments/Influences

Class: RESIDENTIAL-IMPROV Zoning:

School: KINGSLEY AREA SCHOOL

P.R.E. 0%

:

2024 Est TCV 150,146 TCV/TFA: 0.00

Building Permit(s)	Date	Number	Status
Pole Barn	12/08/2021	PB21-0313	ENTERED

X Improved | Vacant

	Public Improvements
	Dirt Road
	Gravel Road
X	Paved Road
	Storm Sewer
	Sidewalk
	Water
	Sewer
X	Electric
	Gas
	Curb
	Street Lights
	Standard Utilities
	Underground Utils.

	Topography of Site
X	Level
	Rolling
	Low
	High
	Landscaped
	Swamp
	Wooded
	Pond
	Waterfront
	Ravine
	Wetland
	Flood Plain
X	OPEN

Who	When	What
JB	10/24/2023	INSPECTION
GLA	10/31/2022	INSPECTION
GLA	06/11/2015	INSPECTION

The Equalizer. Copyright (c) 1999 - 2009.
Licensed To: Township of Greenwood, County of Wexford, Michigan

Land Value Estimates for Land Table 4010.LAND VALUES

Description	Frontage	Depth	* Factors * Front	Depth	Rate	%Adj.	Reason	Value
ACREAGE			4.620 Acres		5,085	100		23,493
ROW			0.200 Acres		0	100		0
			4.82 Total Acres		Total Est. Land Value =			23,493

Year	Land Value	Building Value	Assessed Value	Board of Review	Tribunal/ Other	Taxable Value
2024	11,700	63,400	75,100			58,921C
2023	10,200	0	10,200			3,830C
2022	7,300	0	7,300			3,648C
2021	8,500	0	8,500			3,532C

*** Information herein deemed reliable but not guaranteed***

Building Type

X	Single Family
	Mobile Home
	Town Home
	Duplex
	A-Frame
X	Wood Frame

Building Style: PLAIN

Yr Built	Remodeled
2023 POLE	0

Condition: Good

Room List

	Basement
	1st Floor
	2nd Floor
	Bedrooms

(1) Exterior

	Wood/Shingle
X	Aluminum/Vinyl
	Brick
X	Insulation

(2) Windows

	Many		Large
X	Avg.	X	Avg.
	Few		Small

	Wood Sash
	Metal Sash
X	Vinyl Sash
	Double Hung
	Horiz. Slide
	Casement
	Double Glass
	Patio Doors
X	Storms & Screens

(3) Roof

X	Gable		Gambrel
	Hip		Mansard
	Flat		Shed

X	Asphalt Shingle

Chimney:

(3) Roof (cont.)

	Eavestrough
X	Insulation
0	Front Overhang
0	Other Overhang

(4) Interior

X	Drywall		Plaster
	Paneled		Wood T&G

Trim & Decoration

	Ex	X	Ord		Min

Size of Closets

	Lg	X	Ord		Small

Doors:		Solid	X	H.C.	

(5) Floors

Kitchen:
Other: Linoleum
Other: Carpeted

(6) Ceilings

X	Drywall

(7) Excavation

Basement: 0 S.F.
Crawl: 0 S.F.
Slab: 0 S.F.
Height to Joists: 0.0

(8) Basement

	Conc. Block
	Poured Conc.
	Stone
	Treated Wood
	Concrete Floor

(9) Basement Finish

	Recreation SF
	Living SF
	Walkout Doors (B)
	No Floor SF
	Walkout Doors (A)

(10) Floor Support

Joists:
Unsupported Len:
Cntr.Sup:

(11) Heating/Cooling

X	Gas		Oil		Elec.
	Wood		Coal		Steam

	Forced Air w/o Ducts
X	Forced Air w/ Ducts
	Forced Hot Water
	Electric Baseboard
	Elec. Ceil. Radiant
	Radiant (in-floor)
	Electric Wall Heat
	Space Heater
	Wall/Floor Furnace
	Forced Heat & Cool
	Heat Pump
	No Heating/Cooling

	Central Air
	Wood Furnace

(12) Electric

150	Amps Service

No./Qual. of Fixtures

	Ex.	X	Ord.		Min

No. of Elec. Outlets

	Many	X	Ave.		Few

(13) Plumbing

	Average Fixture(s)
	3 Fixture Bath
	2 Fixture Bath
	Softener, Auto
	Softener, Manual
	Solar Water Heat
	No Plumbing
	Extra Toilet
	Extra Sink
	Separate Shower
	Ceramic Tile Floor
	Ceramic Tile Wains
	Ceramic Tub Alcove
	Vent Fan

(14) Water/Sewer

	Public Water
	Public Sewer
	Water Well
	1000 Gal Septic
	2000 Gal Septic

Lump Sum Items:

(15) Built-ins

	Appliance Allow.
	Cook Top
	Dishwasher
	Garbage Disposal
	Bath Heater
	Vent Fan
	Hot Tub
	Unvented Hood
	Vented Hood
	Intercom
	Jacuzzi Tub
	Jacuzzi repl.Tub
	Oven
	Microwave
	Standard Range
	Self Clean Range
	Sauna
	Trash Compactor
	Central Vacuum
	Security System

(15) Fireplaces

	Interior 1 Story
	Interior 2 Story
	2nd/Same Stack
	Two Sided
	Exterior 1 Story
	Exterior 2 Story
	Prefab 1 Story
	Prefab 2 Story
	Heat Circulator
	Raised Hearth
	Wood Stove
	Direct-Vented Gas

Class: D
Effec. Age: 15
Floor Area: 0
Total Base New : 97,161 E.C.F.
Total Depr Cost: 97,651 X 1.297
Estimated T.C.V: 126,653

(16) Porches/Decks

Area	Type

(17) Garage

Year Built: 2023
Car Capacity:
Class: D
Exterior: Pole
Brick Ven.: 0
Stone Ven.: 0
Common Wall: Detache
Foundation: 18 Inch
Finished ?:
Auto. Doors: 1
Mech. Doors: 0
Area: 5200
% Good: 100
Storage Area: 0
No Conc. Floor: 0

Bsmnt Garage:

Carport Area:
Roof:

Cost Est. for Res. Bldg: 1 Single Family PLAIN Cls D Blt 2023
(11) Heating System: Forced Air w/ Ducts
Ground Area = 0 SF Floor Area = 0 SF.
Phy/Ab.Phy/Func/Econ/Comb. % Good=85/100/100/100/85
Building Areas

Stories	Exterior	Foundation	Size	Cost New	Depr. Cost	
Other Additions/Adjustments						
Plumbing						
3 Fixture Bath			1	-3,268	-2,778	
Garages						
Class: D Exterior: Pole (Unfinished)						
Door Opener			1	433	433	
Base Cost			5200	99,996	99,996	*1
			Totals:	97,161	97,651	

Notes:
ECF (RESIDENTIAL) 1.297 => TCV: 126,653

*** Information herein deemed reliable but not guaranteed***

Parcel Number: 2410-04-1203 Jurisdiction: GREENWOOD TWP County: WEXFORD Printed on 02/15/2024

Grantor	Grantee	Sale Price	Sale Date	Inst. Type	Terms of Sale	Liber & Page	Verified By	Prcnt. Trans.
MCKEE, DONALD ALLEN	MCKEE, DONALD A & WENDY L	100	11/08/2022	QC	20-MULTI PARCEL SALE REF	694/732	DEED	0.0
MCKEE, VIVIAN	MCKEE, DONALD ALLEN	0	06/28/2021	OTH	08-ESTATE	690/1645	DEED	0.0

Property Address

Owner's Name/Address

MCKEE, DONALD A & WENDY L
2728 COUNTY LINE RD
KINGSLEY MI 49649

Tax Description

PAR COM AT PT 1745.85 FT W & 798.45 FT S OF NE COR OF SEC: S 798.45 FT; E 263.93 FT; N 796.71 FT; W 262.91 FT TO POB. TOG W/EASMT --4.82 A M/L-- GW SEC 4 T24N R10W -KINGSLEY- [[ASSESSED W/ 04-1201 '06

Comments/Influences

The Equalizer. Copyright (c) 1999 - 2009. Licensed To: Township of Greenwood, County of Wexford, Michigan

Class: RESIDENTIAL-VACANT Zoning:

School: KINGSLEY AREA SCHOOL

P.R.E. 100% 04/30/2007

:

2024 Est TCV 24,581

Building Permit(s)	Date	Number	Status

Improved | X | Vacant

	Public Improvements
X	Dirt Road
	Gravel Road
	Paved Road
	Storm Sewer
	Sidewalk
	Water
	Sewer
X	Electric
	Gas
	Curb
	Street Lights
	Standard Utilities
	Underground Utils.

	Topography of Site
X	Level
	Rolling
	Low
	High
	Landscaped
	Swamp
	Wooded
	Pond
	Waterfront
	Ravine
	Wetland
	Flood Plain
X	OPEN

Who	When	What
GLA	10/31/2022	INSPECTION
GLA	06/11/2015	INSPECTION

Land Value Estimates for Land Table 4010.LAND VALUES

Description	Frontage	Depth	* Factors * Front	Depth	Rate	%Adj.	Reason	Value
ACREAGE			4.820 Acres		5,100	100		24,581
			4.82 Total Acres		Total Est. Land Value =			24,581

Year	Land Value	Building Value	Assessed Value	Board of Review	Tribunal/ Other	Taxable Value
2024	12,300	0	12,300			6,211C
2023	10,500	0	10,500			5,916C
2022	7,400	0	7,400			5,635C
2021	8,500	0	8,500			5,455C

*** Information herein deemed reliable but not guaranteed***

Parcel Number: 2410-04-1204 Jurisdiction: GREENWOOD TWP County: WEXFORD Printed on 02/15/2024

Grantor	Grantee	Sale Price	Sale Date	Inst. Type	Terms of Sale	Liber & Page	Verified By	Prcnt. Trans.
ARLT, DONALD & MICHELE	FIRST NATIONAL ACCEPTANCE	100	02/15/2018	QC	21-NOT USED/OTHER	681 / 2809	DEED	0.0
FIRST NATIONAL ACCEPTANCE	SHEETS, SCOTT A	0	02/15/2018	LC	29-SELLERS INTEREST IN A	681 /2808	DEED	0.0
CLEAR SHOT INVESTMENTS INC	ARLT, DONALD & MICHELE	0	02/07/2018	QC	21-NOT USED/OTHER	681/2806	DEED	0.0
CLEAR SHOT INVESTMENTS INC	DONALD ARLT & MICHELE	0	09/12/2014	OTH	21-NOT USED/OTHER	670/2704	DEED	0.0

Property Address

11876 N 29 1/2 RD

Owner's Name/Address

SHEETS, SCOTT A
11876 N 29 1/2 RD
KINGSLEY MI 49649

Tax Description

W 2/3 OF NW 1/4 OF NE 1/4 (FRL) SUB TO RD EASMT L492 P766 --32.23 A M/L-- GW. SEC. 4 T24N R10W -KINGSLEY-

Comments/Influences

The Equalizer. Copyright (c) 1999 - 2009. Licensed To: Township of Greenwood, County of Wexford, Michigan

Class: RESIDENTIAL-IMPROV Zoning:

School: KINGSLEY AREA SCHOOL

P.R.E. 0%

:

2024 Est TCV 214,319 TCV/TFA: 164.86

Building Permit(s)	Date	Number	Status
RESIDENTIAL - REMODEL	09/14/2000	PM4412	

X	Improved		Vacant

	Public Improvements
	Dirt Road
X	Gravel Road
	Paved Road
	Storm Sewer
	Sidewalk
	Water
	Sewer
X	Electric
	Gas
	Curb
	Street Lights
	Standard Utilities
	Underground Utils.

	Topography of Site
X	Level
X	Rolling
X	Low
	High
	Landscaped
X	Swamp
X	Wooded
	Pond
	Waterfront
	Ravine
	Wetland
	Flood Plain
X	OPEN/PINES

Who	When	What
GLA	10/31/2022	INSPECTION
GLA	06/11/2015	INSPECTION

Land Value Estimates for Land Table 4010.LAND VALUES

Description	Frontage	Depth	* Factors * Front	Depth	Rate	%Adj.	Reason	Value
ACREAGE			30.380 Acres		2,722	100		82,694
ROW			1.850 Acres		0	100		0
			32.23 Total Acres		Total Est. Land Value =			82,694

Land Improvement Cost Estimates

Description	Rate	Size	% Good	Cash Value
D/W/P: 4in Concrete	7.01	80	45	252
D/W/P: 4in Concrete	7.01	16	45	50
Total Estimated Land Improvements True Cash Value =				302

Year	Land Value	Building Value	Assessed Value	Board of Review	Tribunal/ Other	Taxable Value
2024	41,300	65,900	107,200			67,977C
2023	37,900	53,900	91,800			64,740C
2022	31,700	45,700	77,400			61,658C
2021	27,300	46,400	73,700			59,689C

*** Information herein deemed reliable but not guaranteed***

Building Type

X	Single Family
	Mobile Home
	Town Home
	Duplex
	A-Frame
X	Wood Frame

Building Style: PLAIN

Yr Built	Remodeled
1970	0

Condition: Good

Room List

	Basement
	1st Floor
	2nd Floor
	Bedrooms

(1) Exterior

	Wood/Shingle
X	Aluminum/Vinyl
	Brick
X	Insulation

(2) Windows

	Many		Large
X	Avg.	X	Avg.
	Few		Small

	Wood Sash
	Metal Sash
X	Vinyl Sash
	Double Hung
	Horiz. Slide
	Casement
	Double Glass
	Patio Doors
X	Storms & Screens

(3) Roof

X	Gable		Gambrel
	Hip		Mansard
	Flat		Shed

X	Asphalt Shingle

Chimney:

(3) Roof (cont.)

	Eavestrough
X	Insulation
0	Front Overhang
0	Other Overhang

(4) Interior

X	Drywall		Plaster
	Paneled		Wood T&G

Trim & Decoration

	Ex	X	Ord		Min

Size of Closets

	Lg	X	Ord		Small

Doors:		Solid	X	H.C.	

(5) Floors

Kitchen:
Other: Linoleum
Other: Carpeted

(6) Ceilings

X	Drywall		

(7) Excavation

Basement: 0 S.F.
Crawl: 0 S.F.
Slab: 1300 S.F.
Height to Joists: 0.0

(8) Basement

	Conc. Block
	Poured Conc.
	Stone
	Treated Wood
	Concrete Floor

(9) Basement Finish

	Recreation SF
	Living SF
	Walkout Doors (B)
	No Floor SF
	Walkout Doors (A)

(10) Floor Support

Joists:
Unsupported Len:
Cntr.Sup:

(11) Heating/Cooling

X	Gas		Oil		Elec.
	Wood		Coal		Steam

	Forced Air w/o Ducts
X	Forced Air w/ Ducts
	Forced Hot Water
	Electric Baseboard
	Elec. Ceil. Radiant
	Radiant (in-floor)
	Electric Wall Heat
	Space Heater
	Wall/Floor Furnace
	Forced Heat & Cool
	Heat Pump
	No Heating/Cooling

	Central Air
	Wood Furnace

(12) Electric

150	Amps Service

No./Qual. of Fixtures

	Ex.	X	Ord.		Min

No. of Elec. Outlets

	Many	X	Ave.		Few

(13) Plumbing

	Average Fixture(s)
1	3 Fixture Bath
	2 Fixture Bath
	Softener, Auto
	Softener, Manual
	Solar Water Heat
	No Plumbing
	Extra Toilet
	Extra Sink
	Separate Shower
	Ceramic Tile Floor
	Ceramic Tile Wains
	Ceramic Tub Alcove
	Vent Fan

(14) Water/Sewer

	Public Water
	Public Sewer
1	Water Well
1	1000 Gal Septic
	2000 Gal Septic

Lump Sum Items:

(15) Built-ins

	Appliance Allow.
	Cook Top
	Dishwasher
	Garbage Disposal
	Bath Heater
	Vent Fan
	Hot Tub
	Unvented Hood
	Vented Hood
	Intercom
	Jacuzzi Tub
	Jacuzzi repl.Tub
	Oven
	Microwave
	Standard Range
	Self Clean Range
	Sauna
	Trash Compactor
	Central Vacuum
	Security System

(15) Fireplaces

	Interior 1 Story
	Interior 2 Story
	2nd/Same Stack
	Two Sided
	Exterior 1 Story
	Exterior 2 Story
	Prefab 1 Story
	Prefab 2 Story
	Heat Circulator
	Raised Hearth
	Wood Stove
	Direct-Vented Gas

Class: CD
Effec. Age: 44
Floor Area: 1,300
Total Base New : 180,804 E.C.F.
Total Depr Cost: 101,251 X 1.297
Estimated T.C.V: 131,323

(16) Porches/Decks

Area	Type
60	CCP (1 Story)

(17) Garage

Year Built:
Car Capacity:
Class: CD
Exterior: Siding
Brick Ven.: 0
Stone Ven.: 0
Common Wall: Detache
Foundation: 18 Inch
Finished ?:
Auto. Doors: 0
Mech. Doors: 0
Area: 560
% Good: 0
Storage Area: 420
No Conc. Floor: 0

Bsmnt Garage:

Carport Area:
Roof:

Cost Est. for Res. Bldg: 1 Single Family PLAIN Cls CD Blt 1970
(11) Heating System: Forced Air w/ Ducts
Ground Area = 1300 SF Floor Area = 1300 SF.
Phy/Ab.Phy/Func/Econ/Comb. % Good=56/100/100/100/56
Building Areas

Stories	Exterior	Foundation	Size	Cost New	Depr. Cost
1 Story	Siding	Slab	1,300		
			Total:	144,176	80,739
Other Additions/Adjustments					
Water/Sewer					
1000 Gal Septic			1	4,582	2,566
Water Well, 100 Feet			1	5,680	3,181
Porches					
CCP (1 Story)			60	1,642	920
Garages					
Class: CD Exterior: Siding Foundation: 18 Inch (Unfinished)					
Base Cost			560	19,550	10,948
Storage Over Garage			420	5,174	2,897
			Totals:	180,804	101,251

Notes:
ECF (RESIDENTIAL) 1.297 => TCV: 131,323

*** Information herein deemed reliable but not guaranteed***

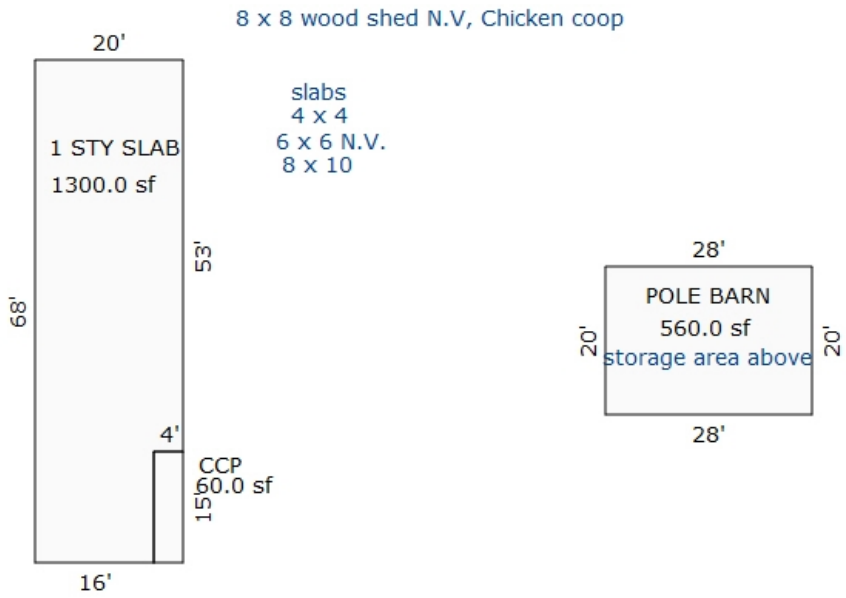

Sketch by Apex Sketch

*** Information herein deemed reliable but not guaranteed***

Parcel Number: 2410-04-1205 Jurisdiction: GREENWOOD TWP County: WEXFORD Printed on 02/15/2024

Grantor	Grantee	Sale Price	Sale Date	Inst. Type	Terms of Sale	Liber & Page	Verified By	Prcnt. Trans.

Property Address	Class: RESIDENTIAL-IMPROV	Zoning:	Building Permit(s)	Date	Number	Status
2728 E COUNTY LINE RD	School: KINGSLEY AREA SCHOOL		Res. Add/Alter/Repair	06/27/2022	PB22-0159	ENTERED
	P.R.E. 100% / /		RESIDENTIAL - REMODEL	10/31/2001	PE14095	
Owner's Name/Address	:					
MCKEE, DONALD A. & WENDY L. 2728 E COUNTY LINE RD KINGSLEY MI 49649	2024 Est TCV 356,599 TCV/TFA: 93.16					

X Improved | Vacant

Land Value Estimates for Land Table 4010.LAND VALUES

Description	Frontage	Depth	* Factors * Front	Depth	Rate	%Adj.	Reason	Value
ACREAGE			0.870 Acres		10,953	100		9,529
ROW			0.130 Acres		0	100		0
			1.00 Total Acres		Total Est. Land Value =			9,529

Land Improvement Cost Estimates

Description	Rate	Size	% Good	Cash Value
D/W/P: 4in Concrete	6.11	41	45	113
Wood Frame	19.35	240	69	3,204
Total Estimated Land Improvements True Cash Value =				3,317

Public Improvements

- Dirt Road
- X Gravel Road
- Paved Road
- Storm Sewer
- Sidewalk
- Water
- Sewer
- X Electric
- Gas
- Curb
- Street Lights
- Standard Utilities
- Underground Utils.

Topography of Site

- X Level
- Rolling
- Low
- High
- Landscaped
- Swamp
- Wooded
- Pond
- Waterfront
- Ravine
- Wetland
- Flood Plain
- X OPEN

Tax Description

PAR COM 1309.39 FT W OF NE COR OF SEC: TH S 249.4 FT; W 174.79 FT; N 249.4 FT; E 174.58 FT TO POB 1 A. M/L GW. SEC. 4 T24N R10W -KINGSLEY-

Comments/Influences

Who	When	What
JB	10/25/2023	INSPECTION
GLA	10/31/2022	INSPECTION
GLA	06/11/2015	INSPECTION

Year	Land Value	Building Value	Assessed Value	Board of Review	Tribunal/ Other	Taxable Value
2024	4,800	173,500	178,300			147,160C
2023	2,600	66,000	68,600			44,534C
2022	2,200	55,800	58,000			42,414C
2021	2,600	56,400	59,000			41,060C

The Equalizer. Copyright (c) 1999 - 2009. Licensed To: Township of Greenwood, County of Wexford, Michigan

*** Information herein deemed reliable but not guaranteed***

Building Type

X	Single Family
	Mobile Home
	Town Home
	Duplex
	A-Frame
X	Wood Frame

Building Style: PLAIN

Yr Built	Remodeled
1992	0

Condition: Good

Room List

	Basement
	1st Floor
	2nd Floor
	Bedrooms

(1) Exterior

X	Wood/Shingle
	Aluminum/Vinyl
	Brick
X	Insulation

(2) Windows

X	Many Avg. Few	X	Large Avg. Small

	Wood Sash
	Metal Sash
X	Vinyl Sash
	Double Hung
	Horiz. Slide
	Casement
	Double Glass
	Patio Doors
X	Storms & Screens

(3) Roof

X	Gable Hip Flat		Gambrel Mansard Shed
X	Asphalt Shingle		

Chimney:

(3) Roof (cont.)

	Eavestrough
X	Insulation
0	Front Overhang
0	Other Overhang

(4) Interior

X	Drywall Paneled		Plaster Wood T&G

Trim & Decoration

	Ex	X	Ord		Min

Size of Closets

	Lg	X	Ord		Small

Doors: | | Solid | X | H.C.

(5) Floors

Kitchen:
Other: Linoleum
Other: Carpeted

(6) Ceilings

X	Drywall		

(7) Excavation

Basement: 1008 S.F.
Crawl: 2820 S.F.
Slab: 0 S.F.
Height to Joists: 0.0

(8) Basement

	Conc. Block
	Poured Conc.
	Stone
	Treated Wood
	Concrete Floor

(9) Basement Finish

	Recreation SF
	Living SF
	Walkout Doors (B)
	No Floor SF
	Walkout Doors (A)

(10) Floor Support

Joists:
Unsupported Len:
Cntr.Sup:

(11) Heating/Cooling

X	Gas Wood		Oil Coal		Elec. Steam

X	Forced Air w/o Ducts
	Forced Air w/ Ducts
	Forced Hot Water
	Electric Baseboard
	Elec. Ceil. Radiant
	Radiant (in-floor)
	Electric Wall Heat
	Space Heater
	Wall/Floor Furnace
	Forced Heat & Cool
	Heat Pump
	No Heating/Cooling

	Central Air
	Wood Furnace

(12) Electric

150	Amps Service

No./Qual. of Fixtures

	Ex.	X	Ord.		Min

No. of Elec. Outlets

	Many	X	Ave.		Few

(13) Plumbing

2	Average Fixture(s)
	3 Fixture Bath
	2 Fixture Bath
	Softener, Auto
	Softener, Manual
	Solar Water Heat
	No Plumbing
	Extra Toilet
	Extra Sink
	Separate Shower
	Ceramic Tile Floor
	Ceramic Tile Wains
	Ceramic Tub Alcove
	Vent Fan

(14) Water/Sewer

	Public Water
	Public Sewer
1	Water Well
1	1000 Gal Septic
	2000 Gal Septic

Lump Sum Items:

(15) Built-ins

	Appliance Allow.
	Cook Top
	Dishwasher
	Garbage Disposal
	Bath Heater
	Vent Fan
	Hot Tub
	Unvented Hood
	Vented Hood
	Intercom
	Jacuzzi Tub
	Jacuzzi repl.Tub
	Oven
	Microwave
	Standard Range
	Self Clean Range
	Sauna
	Trash Compactor
	Central Vacuum
	Security System

(15) Fireplaces

	Interior 1 Story
	Interior 2 Story
	2nd/Same Stack
	Two Sided
	Exterior 1 Story
	Exterior 2 Story
	Prefab 1 Story
	Prefab 2 Story
	Heat Circulator
	Raised Hearth
	Wood Stove
	Direct-Vented Gas

Class: D
Effec. Age: 31
Floor Area: 3,828
Total Base New : 421,113 E.C.F.
Total Depr Cost: 265,037 X 1.297
Estimated T.C.V: 343,753

(16) Porches/Decks

Area	Type
544	CCP (1 Story)

(17) Garage

Year Built: 2023
Car Capacity:
Class: D
Exterior: Siding
Brick Ven.: 0
Stone Ven.: 0
Common Wall: 1 Wall
Foundation: 42 Inch
Finished ?:
Auto. Doors: 4
Mech. Doors: 0
Area: 2040
% Good: 100
Storage Area: 0
No Conc. Floor: 0

Bsmnt Garage:

Carport Area:
Roof:

Cost Est. for Res. Bldg: 1 Single Family PLAIN Cls D Blt 1992
(11) Heating System: Forced Air w/ Ducts
Ground Area = 3828 SF Floor Area = 3828 SF.
Phy/Ab.Phy/Func/Econ/Comb. % Good=69/100/100/100/69
Building Areas

Stories	Exterior	Foundation	Size	Cost New	Depr. Cost	
1 Story	Siding	Basement	1,008			
1 Story	Siding	Crawl Space	2,820			*5
			Total:	338,899	189,377	
Other Additions/Adjustments						
Plumbing						
3 Fixture Bath			1	3,268	1,634	
Water/Sewer						
1000 Gal Septic			1	4,293	2,146	
Water Well, 100 Feet			1	5,545	2,772	
Porches						
CCP (1 Story)			544	11,070	11,070	*1
Garages						
Class: D Exterior: Siding Foundation: 42 Inch (Unfinished)						
Common Wall: 1 Wall			1	-2,326	-2,326	
Door Opener			4	1,734	1,734	
Base Cost			2040	58,630	58,630	*1
			Totals:	421,113	265,037	

Notes:
ECF (RESIDENTIAL) 1.297 => TCV: 343,753

*** Information herein deemed reliable but not guaranteed***

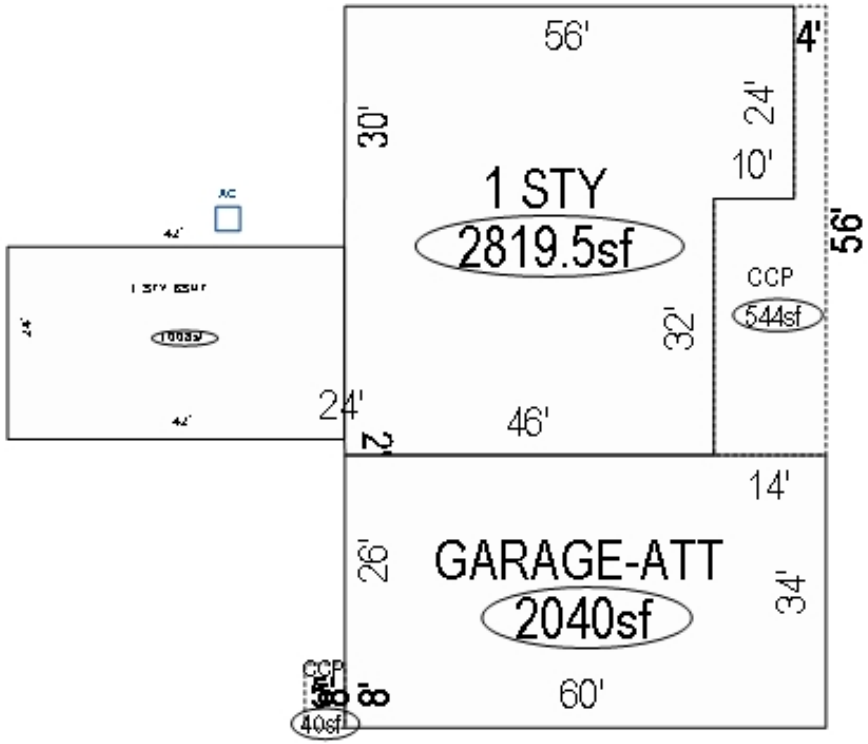

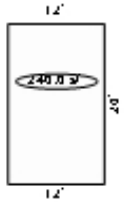

*** Information herein deemed reliable but not guaranteed***

Parcel Number: 2410-04-1301 Jurisdiction: GREENWOOD TWP County: WEXFORD Printed on 02/15/2024

Grantor	Grantee	Sale Price	Sale Date	Inst. Type	Terms of Sale	Liber & Page	Verified By	Prcnt. Trans.
GEIGER, ANNA L.TRUST *	GEIGER, DANIEL J	0	07/30/2014	WD	09-FAMILY	670/174	DEED	0.0

Property Address	Class: AGRICULTURAL-IMPRO	Zoning:	Building Permit(s)	Date	Number	Status
11624 N 29 1/2 RD	School: KINGSLEY AREA SCHOOL		RESIDENTIAL - REMODEL	05/29/2002	PM5918	
	P.R.E. 100% / / Qual. Ag.					
Owner's Name/Address	:					
GEIGER, DANIEL J 17226 N SUNNYVALE CT NINE MILE FALLS WA 99026	2024 Est TCV 301,467 TCV/TFA: 212.30					

X Improved | Vacant

Tax Description

S 1/2 OF FRL NE 1/4 80 A. GW. SEC. 4 T24N R10W -KINGSLEY-

Comments/Influences

	Public Improvements
	Dirt Road
X	Gravel Road
X	Paved Road
	Storm Sewer
	Sidewalk
	Water
	Sewer
X	Electric
	Gas
	Curb
	Street Lights
	Standard Utilities
	Underground Utils.

	Topography of Site
X	Level
X	Rolling
X	Low
	High
	Landscaped
	Swamp
	Wooded
	Pond
	Waterfront
	Ravine
	Wetland
	Flood Plain
X	OPEN

Who	When	What
GLA	05/13/2021	INSPECTION
GLA	06/11/2015	INSPECTED

The Equalizer. Copyright (c) 1999 - 2009.
Licensed To: Township of Greenwood, County of Wexford, Michigan

Land Value Estimates for Land Table 1010.AG

Description	Frontage	Depth	* Factors * Front	Depth	Rate	%Adj.	Reason	Value
	1320.00	0.00	1.0000	1.0000	0	100		0
AG LAND	80 ACRES		78.00 Acres		2690	100		209,820
AG LAND	ROW		2.00 Acres		0	100		0

1320 Actual Front Feet, 80.00 Total Acres Total Est. Land Value = 209,820

Land Improvement Cost Estimates

Description	Rate	Size	% Good	Cash Value
D/W/P: 3.5 Concrete	7.05	296	45	939

Total Estimated Land Improvements True Cash Value = 939

Year	Land Value	Building Value	Assessed Value	Board of Review	Tribunal/ Other	Taxable Value
2024	104,900	45,800	150,700			57,989C
2023	78,000	42,100	120,100			55,228C
2022	70,200	35,400	105,600			52,599C
2021	66,300	37,800	104,100			42,981C

*** Information herein deemed reliable but not guaranteed***

Building Type

X	Single Family
	Mobile Home
	Town Home
	Duplex
	A-Frame
X	Wood Frame

Building Style: RANCH

Yr Built	Remodeled
1900	0

Condition: Fair

Room List

	Basement
	1st Floor
	2nd Floor
	Bedrooms

(1) Exterior

	Wood/Shingle
	Aluminum/Vinyl
	Brick
X	Vinyl
	Insulation

(2) Windows

X	Many	X	Large
	Avg.		Avg.
	Few		Small

Wood Sash
Metal Sash
Vinyl Sash
Double Hung
Horiz. Slide
Casement
Double Glass
Patio Doors
Storms & Screens

(3) Roof

X	Gable		Gambrel
	Hip		Mansard
	Flat		Shed
X	Asphalt Shingle		

Chimney: Block

(3) Roof (cont.)

	Eavestrough
	Insulation
12	Front Overhang
12	Other Overhang

(4) Interior

	Drywall		Plaster
	Paneled		Wood T&G

Trim & Decoration

	Ex	X	Ord		Min

Size of Closets

	Lg	X	Ord		Small

Doors:		Solid	X	H.C.	

(5) Floors

Kitchen:
Other:
Other:

(6) Ceilings

(7) Excavation

Basement: 0 S.F.
Crawl: 432 S.F.
Slab: 880 S.F.
Height to Joists: 0.0

(8) Basement

Conc. Block
Poured Conc.
Stone
Treated Wood
Concrete Floor

(9) Basement Finish

	Recreation SF
	Living SF
	Walkout Doors (B)
	No Floor SF
	Walkout Doors (A)

(10) Floor Support

Joists:
Unsupported Len:
Cntr.Sup:

(11) Heating/Cooling

X	Gas		Oil		Elec.
	Wood		Coal		Steam

	Forced Air w/o Ducts
X	Forced Air w/ Ducts
	Forced Hot Water
	Electric Baseboard
	Elec. Ceil. Radiant
	Radiant (in-floor)
	Electric Wall Heat
	Space Heater
	Wall/Floor Furnace
	Forced Heat & Cool
	Heat Pump
	No Heating/Cooling
	Central Air
	Wood Furnace

(12) Electric

0	Amps Service

No./Qual. of Fixtures

	Ex.	X	Ord.		Min

No. of Elec. Outlets

	Many	X	Ave.		Few

(13) Plumbing

1	Average Fixture(s)
	3 Fixture Bath
	2 Fixture Bath
	Softener, Auto
	Softener, Manual
	Solar Water Heat
	No Plumbing
	Extra Toilet
	Extra Sink
	Separate Shower
	Ceramic Tile Floor
	Ceramic Tile Wains
	Ceramic Tub Alcove
	Vent Fan

(14) Water/Sewer

	Public Water
	Public Sewer
1	Water Well
1	1000 Gal Septic
	2000 Gal Septic

Lump Sum Items:

(15) Built-ins

	Appliance Allow.
	Cook Top
	Dishwasher
	Garbage Disposal
	Bath Heater
	Vent Fan
	Hot Tub
	Unvented Hood
	Vented Hood
	Intercom
	Jacuzzi Tub
	Jacuzzi repl.Tub
	Oven
	Microwave
	Standard Range
	Self Clean Range
	Sauna
	Trash Compactor
	Central Vacuum
	Security System

(15) Fireplaces

	Interior 1 Story
	Interior 2 Story
	2nd/Same Stack
	Two Sided
	Exterior 1 Story
	Exterior 2 Story
	Prefab 1 Story
	Prefab 2 Story
	Heat Circulator
	Raised Hearth
	Wood Stove
	Direct-Vented Gas

Class: CD
Effec. Age: 52
Floor Area: 1,420
Total Base New : 217,123 E.C.F.
Total Depr Cost: 91,591 X 0.946
Estimated T.C.V: 86,645

(16) Porches/Decks

Area	Type
49	WGEP (1 Story)

(17) Garage

Year Built:
Car Capacity:
Class: CD
Exterior: Siding
Brick Ven.: 0
Stone Ven.: 0
Common Wall: Detache
Foundation: 18 Inch
Finished ?:
Auto. Doors: 0
Mech. Doors: 0
Area: 320
% Good: 0
Storage Area: 0
No Conc. Floor: 0

Bsmnt Garage:

Carport Area:
Roof:

Cost Est. for Res. Bldg: 1 Single Family RANCH Cls CD Blt 1900
(11) Heating System: Forced Air w/ Ducts
Ground Area = 1312 SF Floor Area = 1420 SF.
Phy/Ab.Phy/Func/Econ/Comb. % Good=48/100/100/100/48
Building Areas

Stories	Exterior	Foundation	Size	Cost New	Depr. Cost	
1 Story	Siding	Slab	336			
1.25 Story	Siding	Crawl Space	432			
1 Story	Siding	Slab	288			
1 Story	Siding	Slab	256			
			Total:	154,650	74,232	
Other Additions/Adjustments						
Water/Sewer						
1000 Gal Septic			1	4,582	2,199	
Water Well, 100 Feet			1	5,680	2,726	
Porches						
WGEP (1 Story)			49	5,529	2,654	
Garages						
Class: CD Exterior: Siding Foundation: 18 Inch (Unfinished)						
Base Cost			320	13,453	6,457	
Class: D Exterior: Pole (Unfinished)						
Base Cost			1728	33,229	3,323	*1
			Totals:	217,123	91,591	

Notes:

ECF (AG) 0.946 => TCV: 86,645

*** Information herein deemed reliable but not guaranteed***

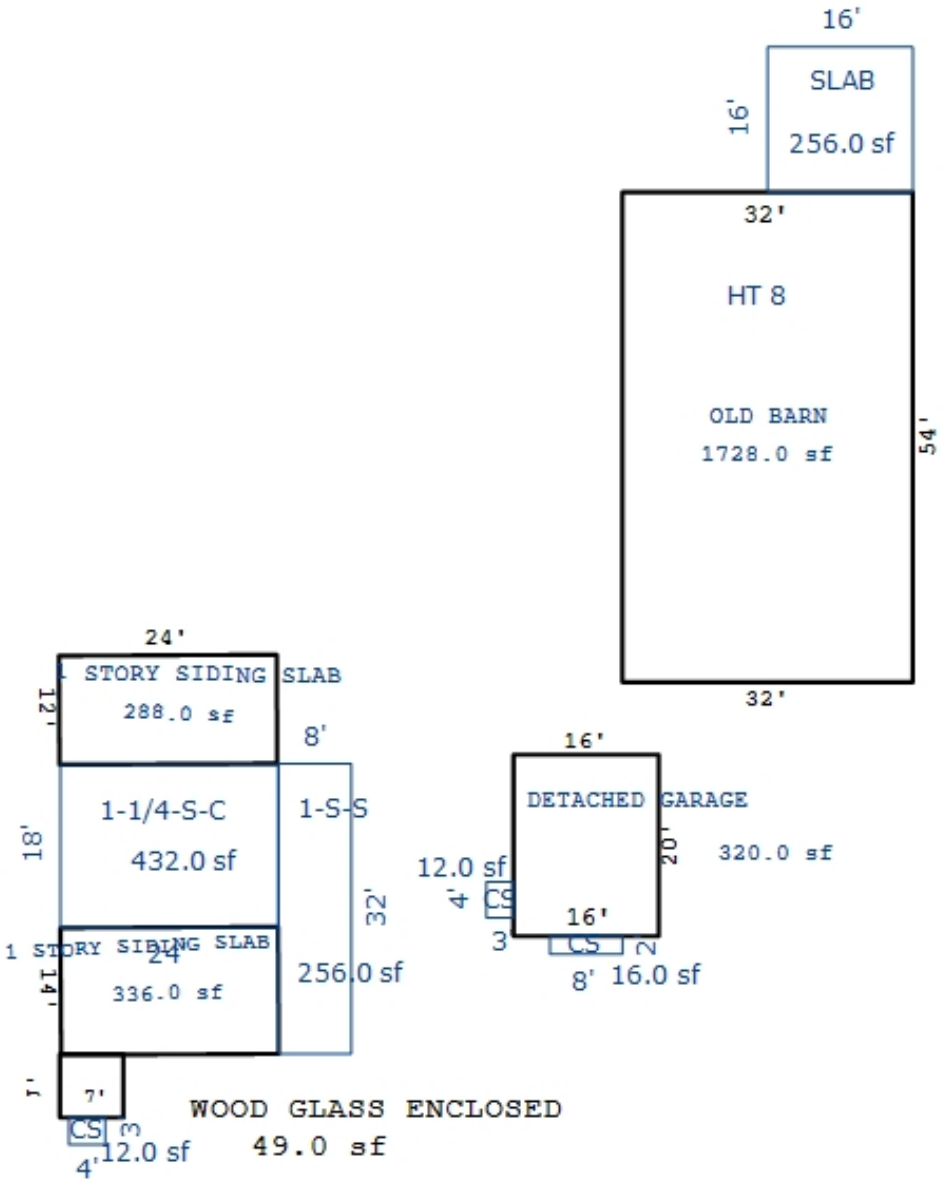

*** Information herein deemed reliable but not guaranteed***

Building Type	Barn - General Purpose	Barn - General Purpose			
Year Built					
Class/Construction	D,Frame	D,Frame			
Quality/Exterior	Low Cost	Low Cost			
# of Walls, Perimeter	4 Wall, 172	Lean-To, 64			
Height	12	10			
Heating System	No Heating/Cooling	No Heating/Cooling			
Length/Width/Area	54 x 32 = 1728	16 x 16 = 256			
Cost New	$ 45,550	$ 8,135			
Phy./Func./Econ. %Good	20/40/100 8.0	20/40/100 8.0			
Depreciated Cost	$ 3,644	$ 651			
+ Unit-In-Place Items	$ 0	$ 0			
Description, Size X Rate X %Good = Cost Itemized ->\ Unit-In-Place ->\ Items ->\					
E.C.F.	X 0.946	X 0.946			
% Good	20	20			
Est. True Cash Value	$ 3,447	$ 616			
Comments:					
Total Estimated True Cash Value of Agricultural Improvements / This Card: 4063 / All Cards: 4063					

*** Information herein deemed reliable but not guaranteed***

Parcel Number: 2410-04-2101-02 Jurisdiction: GREENWOOD TWP County: WEXFORD Printed on 02/15/2024

Grantor	Grantee	Sale Price	Sale Date	Inst. Type	Terms of Sale	Liber & Page	Verified By	Prcnt. Trans.
ARLT, ROY R. & SUSAN K LE	ARLT, EDMUND R	0	08/14/2017	WD	09-FAMILY	6802/567	DEED	0.0
ARLT, ROY R. & SUSAN K LE	ARLT, ROY R & SUSAN K TRUS	0	11/18/2015	QC	09-FAMILY	676/1284	DEED	0.0

Property Address

2224 E COUNTY LINE RD

Owner's Name/Address

ARLT, EDMUND R
2182 COUNTY LINE RD
KINGSLEY MI 49649-9644

Tax Description

PAR COM AT NW COR OF E 693 FT OF N 1323 FT OF FRL NW 1/4; W 626.25 FT TO POB; W 208-75 FT; S 417.5 FT; E 208.75 FT; N TO POB 2 A/ML GW. SEC. 4 T24N R10W
-KINGSLEY- SPLIT ON 9/16/08 TO 2410-04-2105, SPLIT 2/2013 TO 2410-04-2202
SPLIT/COMBINED ON 01/23/2016 FROM 2410-04-2101;

Comments/Influences

Split/Comb. on 01/23/2016 completed 01/23/2016 BSA ;
Parent Parcel(s): 2410-04-2101;
Child Parcel(s): 2410-04-2101-01, 2410-04-2101-02;

The Equalizer. Copyright (c) 1999 - 2009. Licensed To: Township of Greenwood, County of Wexford, Michigan

Class: RESIDENTIAL-VACANT Zoning:

School: KINGSLEY AREA SCHOOL

P.R.E. 0%

:

2024 Est TCV 53,523 TCV/TFA: 44.02

Building Permit(s)	Date	Number	Status

X Improved | | Vacant

Public Improvements

- Dirt Road
- Gravel Road
- Paved Road
- Storm Sewer
- Sidewalk
- Water
- Sewer
- Electric
- Gas
- Curb
- Street Lights
- Standard Utilities
- Underground Utils.

Topography of Site

- Level
- Rolling
- Low
- High
- Landscaped
- Swamp
- Wooded
- Pond
- Waterfront
- Ravine
- Wetland
- Flood Plain

Who	When	What
GLA	10/31/2022	INSPECTION

Land Value Estimates for Land Table 4010.LAND VALUES

Description	Frontage	Depth	* Factors * Front	Depth	Rate	%Adj.	Reason	Value
ACREAGE			1.840 Acres		6,957	100		12,800
ROW			0.160 Acres		0	100		0
			2.00 Total Acres		Total Est. Land Value =			12,800

Year	Land Value	Building Value	Assessed Value	Board of Review	Tribunal/ Other	Taxable Value
2024	6,400	20,400	26,800			20,357C
2023	5,200	16,400	21,600			19,388C
2022	4,300	0	4,300			4,084C
2021	4,800	0	4,800			3,954C

*** Information herein deemed reliable but not guaranteed***

Building Type

	Single Family
X	Mobile Home
	Town Home
	Duplex
	A-Frame

X	Wood Frame

Building Style: SWT/DWT

Yr Built	Remodeled
0	0

Condition: Good

Room List

	Basement
	1st Floor
	2nd Floor
	Bedrooms

(1) Exterior

	Wood/Shingle
X	Aluminum/Vinyl
	Brick
X	Insulation

(2) Windows

X	Many Avg. Few		Large Avg. Small

	Wood Sash
	Metal Sash
X	Vinyl Sash
	Double Hung
	Horiz. Slide
	Casement
	Double Glass
	Patio Doors
X	Storms & Screens

(3) Roof

X	Gable		Gambrel
	Hip		Mansard
	Flat		Shed

X	Asphalt Shingle

Chimney:

(3) Roof (cont.)

	Eavestrough
X	Insulation
0	Front Overhang
0	Other Overhang

(4) Interior

X	Drywall		Plaster
	Paneled		Wood T&G

Trim & Decoration

	Ex	X	Ord		Min

Size of Closets

	Lg	X	Ord		Small

Doors:		Solid	X	H.C.	

(5) Floors

Kitchen:
Other: Linoleum
Other: Carpeted

(6) Ceilings

X	Drywall		

(7) Excavation

Basement: 0 S.F.
Crawl: 0 S.F.
Slab: 0 S.F.
Height to Joists: 0.0

(8) Basement

	Conc. Block
	Poured Conc.
	Stone
	Treated Wood
	Concrete Floor

(9) Basement Finish

	Recreation SF
	Living SF
	Walkout Doors (B)
	No Floor SF
	Walkout Doors (A)

(10) Floor Support

Joists:
Unsupported Len:
Cntr.Sup:

(11) Heating/Cooling

X	Gas		Oil		Elec.
	Wood		Coal		Steam

X	Forced Warm Air
	Wall Furnace
	Warm & Cool Air
	Heat Pump

	Central Air
	Wood Furnace

(12) Electric

150	Amps Service

No./Qual. of Fixtures

	Ex.	X	Ord.		Min

No. of Elec. Outlets

	Many	X	Ave.		Few

(13) Plumbing

	Average Fixture(s)
1	3 Fixture Bath
	2 Fixture Bath
	Softener, Auto
	Softener, Manual
	Solar Water Heat
	No Plumbing
	Extra Toilet
	Extra Sink
	Separate Shower
	Ceramic Tile Floor
	Ceramic Tile Wains
	Ceramic Tub Alcove
	Vent Fan

(14) Water/Sewer

	Public Water
	Public Sewer
1	Water Well
1	1000 Gal Septic
	2000 Gal Septic

Lump Sum Items:

(15) Built-ins

	Appliance Allow.
	Cook Top
	Dishwasher
	Garbage Disposal
	Bath Heater
	Vent Fan
	Hot Tub
	Unvented Hood
	Vented Hood
	Intercom
	Jacuzzi Tub
	Jacuzzi repl.Tub
	Oven
	Microwave
	Standard Range
	Self Clean Range
	Sauna
	Trash Compactor
	Central Vacuum
	Security System

(15) Fireplaces

	Interior 1 Story
	Interior 2 Story
	2nd/Same Stack
	Two Sided
	Exterior 1 Story
	Exterior 2 Story
	Prefab 1 Story
	Prefab 2 Story
	Heat Circulator
	Raised Hearth
	Wood Stove
	Direct-Vented Gas

Class: Fair
Effec. Age: 20
Floor Area:
Total Base New : 68,254 E.C.F.
Total Depr Cost: 31,398 X 1.297
Estimated T.C.V: 40,723

(16) Porches/Decks

Area	Type

(17) Garage

Year Built:
Car Capacity:
Class:
Exterior:
Brick Ven.:
Stone Ven.:
Common Wall:
Foundation:
Finished ?:
Auto. Doors:
Mech. Doors:
Area:
% Good:
Storage Area:
No Conc. Floor:

Bsmnt Garage:

Carport Area:
Roof:

Cost Est. for Res. Bldg: 1 Mobile Home SWT/DWT Cls Fair Blt 0
(11) Heating System: Wall Furnace
Ground Area = 1216 SF Floor Area = 1216 SF.
Phy/Ab.Phy/Func/Econ/Comb. % Good=46/100/100/100/46
Building Areas

Type	Ext. Walls	Roof/Fnd.	Size	Cost New	Depr. Cost
Main Home	Ribbed	Metal	1216		
			Total:	55,940	25,733
Other Additions/Adjustments					
Skirting, Metal or Vinyl, Vertical			184	2,052	944
Water/Sewer					
1000 Gal Septic			1	4,582	2,108
Water Well, 100 Feet			1	5,680	2,613
			Totals:	68,254	31,398

Notes:

ECF (RESIDENTIAL) 1.297 => TCV: 40,723

*** Information herein deemed reliable but not guaranteed***

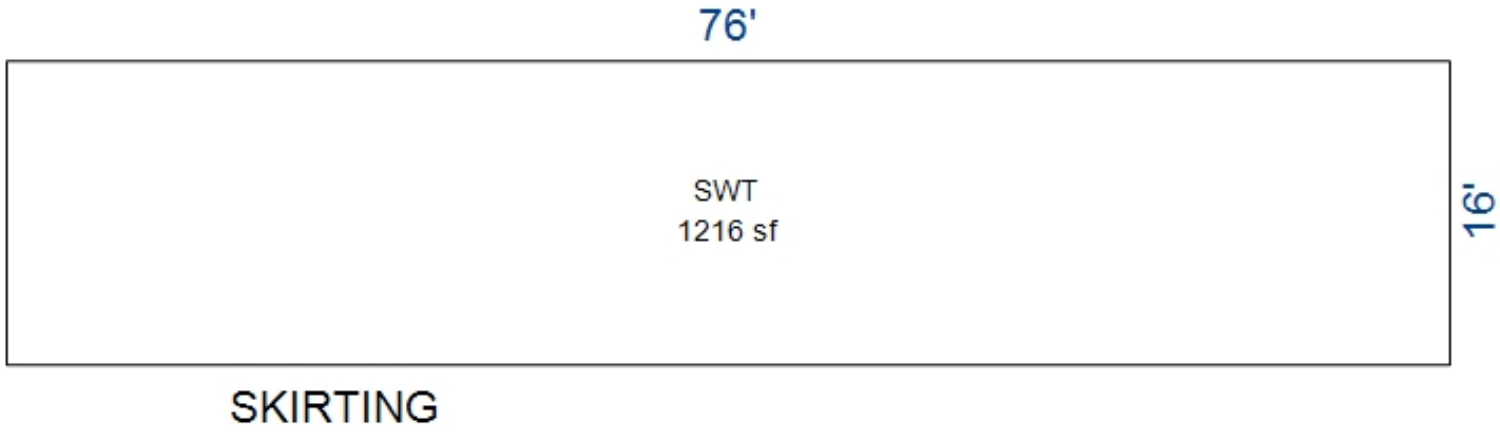

*** Information herein deemed reliable but not guaranteed***

Parcel Number: 2410-04-2101-05 Jurisdiction: GREENWOOD TWP County: WEXFORD Printed on 02/15/2024

Grantor	Grantee	Sale Price	Sale Date	Inst. Type	Terms of Sale	Liber & Page	Verified By	Prcnt. Trans.

Property Address	Class: RESIDENTIAL-IMPROV	Zoning:	Building Permit(s)	Date	Number	Status
2182 E COUNTY LINE RD	School: KINGSLEY AREA SCHOOL					
	P.R.E. 0%					
Owner's Name/Address	:					
	2024 Est TCV 107,322 TCV/TFA: 119.78					

ARLT, EDMUND R
2182 COUNTY LINE RD
KINGSLEY MI 49649-9644

X Improved | Vacant

Public Improvements

- Dirt Road
- Gravel Road
- Paved Road
- Storm Sewer
- Sidewalk
- Water
- Sewer
- Electric
- Gas
- Curb
- Street Lights
- Standard Utilities
- Underground Utils.

Topography of Site

- Level
- Rolling
- Low
- High
- Landscaped
- Swamp
- Wooded
- Pond
- Waterfront
- Ravine
- Wetland
- Flood Plain

Who When What
GLA 05/13/2021 INSPECTION

Tax Description

T24N R10W -KINGSLEY- SPLIT ON 9/16/08 TO 2410-04-2105, SPLIT 2/2013 TO 2410-04-2202
SPLIT ON 01/23/2016 INTO 2410-04-2101-01, 2410-04-2101-02;
SPLIT/COMBINED ON 01/14/2019 FROM 2410-04-2101-01;
COMBINED ON 01/05/2022 FROM 2410-04-2101-03, 2410-04-2101-04;
SPLIT PORTION INTO 2410-04-2301-01
PAR B: PT OF NW 1/ OF SD SEC DESC AS COM AT NW COR OF SD SEC; E 825.18 FT TO POB; E 265.67 FT; S 417.5 FT; E 521.75 FT; N 417.51 FT TO SD SEC LN; E 104.50 FT; S 834.88 FT; E 208.69 FT; S 499.62 FT; W 471.22 FT; S 277.13 FT; W 623.23 FT N 1617.84 FT TO POB 28.68 AC M/L SUB TO AND TOG W EASMENT GW SEC 4 ....
BALANCE OF DESCRIPTION ON FILE

Comments/Influences

Split/Comb. on 01/05/2022 completed 01/05/2022 LINDA ;
Parent Parcel(s): 2410-04-2101-03, 2410-04-2101-04;
Child Parcel(s): 2410-04-2101-05;

The Equalizer. Copyright (c) 1999 - 2009. Licensed To: Township of Greenwood, County of Wexford, Michigan

Land Value Estimates for Land Table 4010.LAND VALUES

Description	Frontage	Depth	* Factors * Front	Depth	Rate	%Adj.	Reason	Value
ACREAGE			28.680 Acres		2,722	100		78,067
			28.68 Total Acres		Total Est. Land Value =			78,067

Land Improvement Cost Estimates

Description	Rate	Size	% Good	Cash Value
Wood Frame	28.00	64	58	1,039
Total Estimated Land Improvements True Cash Value =				1,039

Year	Land Value	Building Value	Assessed Value	Board of Review	Tribunal/ Other	Taxable Value
2024	39,000	14,700	53,700			26,496C
2023	35,900	11,800	47,700			25,235C
2022	30,400	9,900	40,300			24,034C
2021	0	0	0			0

*** Information herein deemed reliable but not guaranteed***

Building Type

	Single Family
X	Mobile Home
	Town Home
	Duplex
	A-Frame
X	Wood Frame

Building Style: SWT/DWT

Yr Built	Remodeled
0	0

Condition: Good

Room List

	Basement
	1st Floor
	2nd Floor
	Bedrooms

(1) Exterior

	Wood/Shingle
X	Aluminum/Vinyl
	Brick
X	Insulation

(2) Windows

	Many		Large
X	Avg.	X	Avg.
	Few		Small

	Wood Sash
	Metal Sash
X	Vinyl Sash
	Double Hung
	Horiz. Slide
	Casement
	Double Glass
	Patio Doors
X	Storms & Screens

(3) Roof

X	Gable		Gambrel
	Hip		Mansard
	Flat		Shed

X	Asphalt Shingle

Chimney:

(3) Roof (cont.)

	Eavestrough
X	Insulation
0	Front Overhang
0	Other Overhang

(4) Interior

X	Drywall		Plaster
	Paneled		Wood T&G

Trim & Decoration

	Ex	X	Ord		Min

Size of Closets

	Lg	X	Ord		Small

Doors:		Solid	X	H.C.	

(5) Floors

Kitchen:
Other: Linoleum
Other: Carpeted

(6) Ceilings

X	Drywall		

(7) Excavation

Basement: 0 S.F.
Crawl: 0 S.F.
Slab: 0 S.F.
Height to Joists: 0.0

(8) Basement

	Conc. Block
	Poured Conc.
	Stone
	Treated Wood
	Concrete Floor

(9) Basement Finish

	Recreation SF
	Living SF
	Walkout Doors (B)
	No Floor SF
	Walkout Doors (A)

(10) Floor Support

Joists:
Unsupported Len:
Cntr.Sup:

(11) Heating/Cooling

X	Gas		Oil		Elec.
	Wood		Coal		Steam

X	Forced Warm Air
	Wall Furnace
	Warm & Cool Air
	Heat Pump

	Central Air
	Wood Furnace

(12) Electric

150	Amps Service

No./Qual. of Fixtures

	Ex.	X	Ord.		Min

No. of Elec. Outlets

	Many	X	Ave.		Few

(13) Plumbing

1	Average Fixture(s)
	3 Fixture Bath
	2 Fixture Bath
	Softener, Auto
	Softener, Manual
	Solar Water Heat
	No Plumbing
	Extra Toilet
	Extra Sink
	Separate Shower
	Ceramic Tile Floor
	Ceramic Tile Wains
	Ceramic Tub Alcove
	Vent Fan

(14) Water/Sewer

	Public Water
	Public Sewer
1	Water Well
1	1000 Gal Septic
	2000 Gal Septic

Lump Sum Items:

(15) Built-ins

	Appliance Allow.
	Cook Top
	Dishwasher
	Garbage Disposal
	Bath Heater
	Vent Fan
	Hot Tub
	Unvented Hood
	Vented Hood
	Intercom
	Jacuzzi Tub
	Jacuzzi repl.Tub
	Oven
	Microwave
	Standard Range
	Self Clean Range
	Sauna
	Trash Compactor
	Central Vacuum
	Security System

(15) Fireplaces

	Interior 1 Story
	Interior 2 Story
	2nd/Same Stack
	Two Sided
	Exterior 1 Story
	Exterior 2 Story
	Prefab 1 Story
	Prefab 2 Story
	Heat Circulator
	Raised Hearth
	Wood Stove
	Direct-Vented Gas

Class: Fair
Effec. Age: 25
Floor Area:
Total Base New : 62,152 E.C.F.
Total Depr Cost: 21,755 X 1.297
Estimated T.C.V: 28,216

(16) Porches/Decks

Area	Type
169	WPP

(17) Garage

Year Built:
Car Capacity:
Class:
Exterior:
Brick Ven.:
Stone Ven.:
Common Wall:
Foundation:
Finished ?:
Auto. Doors:
Mech. Doors:
Area:
% Good:
Storage Area:
No Conc. Floor:

Bsmnt Garage:

Carport Area:
Roof:

Cost Est. for Res. Bldg: 1 Mobile Home SWT/DWT Cls Fair Blt 0
(11) Heating System: Wall Furnace
Ground Area = 896 SF Floor Area = 896 SF.
Phy/Ab.Phy/Func/Econ/Comb. % Good=35/100/100/100/35
Building Areas

Type	Ext. Walls	Roof/Fnd.	Size	Cost New	Depr. Cost
Main Home	Ribbed	Metal	896		
			Total:	46,386	16,236
Other Additions/Adjustments					
Skirting, Metal or Vinyl, Vertical			156	1,739	609
Water/Sewer					
1000 Gal Septic			1	4,582	1,604
Water Well, 100 Feet			1	5,680	1,988
Porches					
WPP			169	3,765	1,318
			Totals:	62,152	21,755

Notes:
ECF (RESIDENTIAL) 1.297 => TCV: 28,216

*** Information herein deemed reliable but not guaranteed***

Parcel Number: 2410-04-2102 Jurisdiction: GREENWOOD TWP County: WEXFORD Printed on 02/15/2024

Grantor	Grantee	Sale Price	Sale Date	Inst. Type	Terms of Sale	Liber & Page	Verified By	Prcnt. Trans.
OCKERT, DANIEL J.	OCKERT, DANIEL J LE	0	04/24/2021	WD	18-LIFE ESTATE	690/1476	DEED	0.0
CONROY, JOHN J.	OCKERT, DANIEL J.	25,000	05/19/1987	WD	03-ARM'S LENGTH	306:758	DEED	0.0

Property Address

2428 E COUNTY LINE RD

Owner's Name/Address

OCKERT, DANIEL J LE
P.O. BOX 39
KINGSLEY MI 49649

Tax Description

N 693 FT OF E 693 FT OF FRL NW 1/4 11.02 A. M/L SUB TO RD EASMT L492 P764 GW. SEC. 4 T24N R10W -KINGSLEY-

Comments/Influences

Class: RESIDENTIAL-IMPROV Zoning:

School: KINGSLEY AREA SCHOOL

P.R.E. 100% / /

:

2024 Est TCV 316,543 TCV/TFA: 266.45

Building Permit(s)	Date	Number	Status

X Improved | Vacant

	Public Improvements
	Dirt Road
	Gravel Road
X	Paved Road
	Storm Sewer
	Sidewalk
	Water
	Sewer
X	Electric
	Gas
	Curb
	Street Lights
	Standard Utilities
	Underground Utils.

	Topography of Site
	Level
X	Rolling
X	Low
X	High
	Landscaped
X	Swamp
X	Wooded
	Pond
	Waterfront
	Ravine
	Wetland
	Flood Plain
X	OPEN

Who	When	What
GLA	10/31/2022	INSPECTION
GLA	06/11/2015	INSPECTION

Land Value Estimates for Land Table 4010.LAND VALUES

Description	Frontage	Depth	* Factors * Front	Depth	Rate	%Adj.	Reason	Value
ACREAGE			10.020 Acres		4,626	100		46,357
ROW			1.000 Acres		0	100		0
			11.02 Total Acres				Total Est. Land Value =	46,357

Land Improvement Cost Estimates

Description	Rate	Size	% Good	Cash Value
D/W/P: 4in Concrete	7.01	208	50	729
Total Estimated Land Improvements True Cash Value =				729

Year	Land Value	Building Value	Assessed Value	Board of Review	Tribunal/ Other	Taxable Value
2024	23,200	135,100	158,300			89,834C
2023	13,000	110,400	123,400			85,557C
2022	12,000	93,400	105,400			81,483C
2021	12,000	94,700	106,700			78,880C

The Equalizer. Copyright (c) 1999 - 2009. Licensed To: Township of Greenwood, County of Wexford, Michigan

*** Information herein deemed reliable but not guaranteed***

Building Type

X	Single Family
	Mobile Home
	Town Home
	Duplex
	A-Frame
X	Wood Frame

Building Style: PLAIN

Yr Built	Remodeled
1999	0

Condition: Good

Room List

	Basement
	1st Floor
	2nd Floor
	Bedrooms

(1) Exterior

X	Wood/Shingle
	Aluminum/Vinyl
	Brick
X	Insulation

(2) Windows

X	Many Avg. Few	X	Large Avg. Small

	Wood Sash
	Metal Sash
X	Vinyl Sash
	Double Hung
	Horiz. Slide
	Casement
	Double Glass
	Patio Doors
X	Storms & Screens

(3) Roof

X	Gable		Gambrel
	Hip		Mansard
	Flat		Shed

X	Asphalt Shingle

Chimney:

(3) Roof (cont.)

	Eavestrough
X	Insulation
0	Front Overhang
0	Other Overhang

(4) Interior

X	Drywall Paneled		Plaster Wood T&G

Trim & Decoration

	Ex	X	Ord		Min

Size of Closets

	Lg	X	Ord		Small

Doors: | | Solid | X | H.C.

(5) Floors

Kitchen:
Other: Linoleum
Other: Carpeted

(6) Ceilings

X	Drywall

(7) Excavation

Basement: 1188 S.F.
Crawl: 0 S.F.
Slab: 0 S.F.
Height to Joists: 0.0

(8) Basement

	Conc. Block
	Poured Conc.
	Stone
	Treated Wood
	Concrete Floor

(9) Basement Finish

	Recreation	SF
1044	Living	SF
1	Walkout Doors (B)	
	No Floor	SF
	Walkout Doors (A)	

(10) Floor Support

Joists:
Unsupported Len:
Cntr.Sup:

(11) Heating/Cooling

X	Gas		Oil		Elec.
	Wood		Coal		Steam

	Forced Air w/o Ducts
X	Forced Air w/ Ducts
	Forced Hot Water
	Electric Baseboard
	Elec. Ceil. Radiant
	Radiant (in-floor)
	Electric Wall Heat
	Space Heater
	Wall/Floor Furnace
	Forced Heat & Cool
	Heat Pump
	No Heating/Cooling

	Central Air
	Wood Furnace

(12) Electric

150	Amps Service

No./Qual. of Fixtures

	Ex.	X	Ord.		Min

No. of Elec. Outlets

	Many	X	Ave.		Few

(13) Plumbing

2	Average Fixture(s)
	3 Fixture Bath
	2 Fixture Bath
	Softener, Auto
	Softener, Manual
	Solar Water Heat
	No Plumbing
	Extra Toilet
	Extra Sink
	Separate Shower
	Ceramic Tile Floor
	Ceramic Tile Wains
	Ceramic Tub Alcove
	Vent Fan

(14) Water/Sewer

	Public Water
	Public Sewer
1	Water Well
1	1000 Gal Septic
	2000 Gal Septic

Lump Sum Items:

(15) Built-ins

	Appliance Allow.
	Cook Top
	Dishwasher
	Garbage Disposal
	Bath Heater
	Vent Fan
	Hot Tub
	Unvented Hood
	Vented Hood
	Intercom
	Jacuzzi Tub
	Jacuzzi repl.Tub
	Oven
	Microwave
	Standard Range
	Self Clean Range
	Sauna
	Trash Compactor
	Central Vacuum
	Security System

(15) Fireplaces

	Interior 1 Story
	Interior 2 Story
	2nd/Same Stack
	Two Sided
	Exterior 1 Story
	Exterior 2 Story
	Prefab 1 Story
	Prefab 2 Story
	Heat Circulator
	Raised Hearth
	Wood Stove
	Direct-Vented Gas

Class: CD
Effec. Age: 24
Floor Area: 1,188
Total Base New : 273,360 E.C.F.
Total Depr Cost: 207,754 X 1.297
Estimated T.C.V: 269,457

(16) Porches/Decks

Area	Type
136	WGEP (1 Story)
96	WGEP (1 Story)
336	WCP (1 Story)
188	WCP (1 Story)
421	WPP

(17) Garage

Year Built:
Car Capacity:
Class: CD
Exterior: Siding
Brick Ven.: 0
Stone Ven.: 0
Common Wall: Detache
Foundation: 18 Inch
Finished ?:
Auto. Doors: 0
Mech. Doors: 0
Area: 384
% Good: 0
Storage Area: 0
No Conc. Floor: 0

Bsmnt Garage:

Carport Area:
Roof:

Cost Est. for Res. Bldg: 1 Single Family PLAIN Cls CD Blt 1999
(11) Heating System: Forced Air w/ Ducts
Ground Area = 1188 SF Floor Area = 1188 SF.
Phy/Ab.Phy/Func/Econ/Comb. % Good=76/100/100/100/76
Building Areas

Stories	Exterior	Foundation	Size	Cost New	Depr. Cost
1 Story	Siding	Basement	1,188		
			Total:	157,033	119,345
Other Additions/Adjustments					
Basement Living Area			1044	35,151	26,715
Basement, Outside Entrance, Below Grade			1	2,176	1,654
Plumbing					
3 Fixture Bath			1	3,887	2,954
Water/Sewer					
1000 Gal Septic			1	4,582	3,482
Water Well, 100 Feet			1	5,680	4,317
Porches					
WGEP (1 Story)			136	10,869	8,260
WGEP (1 Story)			96	8,668	6,588
WCP (1 Story)			336	9,892	7,518
WCP (1 Story)			188	6,977	5,303
WPP			421	6,286	4,777
Garages					
Class: CD Exterior: Siding Foundation: 18 Inch (Unfinished)					
Base Cost			384	15,095	11,472
Local Cost Items					
WOOD LEAN TO DIRT			480	2,064	1,569
OUTSIDE FURNACE			1	5,000	3,800
			Totals:	273,360	207,754

Notes:
ECF (RESIDENTIAL) 1.297 => TCV: 269,457

*** Information herein deemed reliable but not guaranteed***

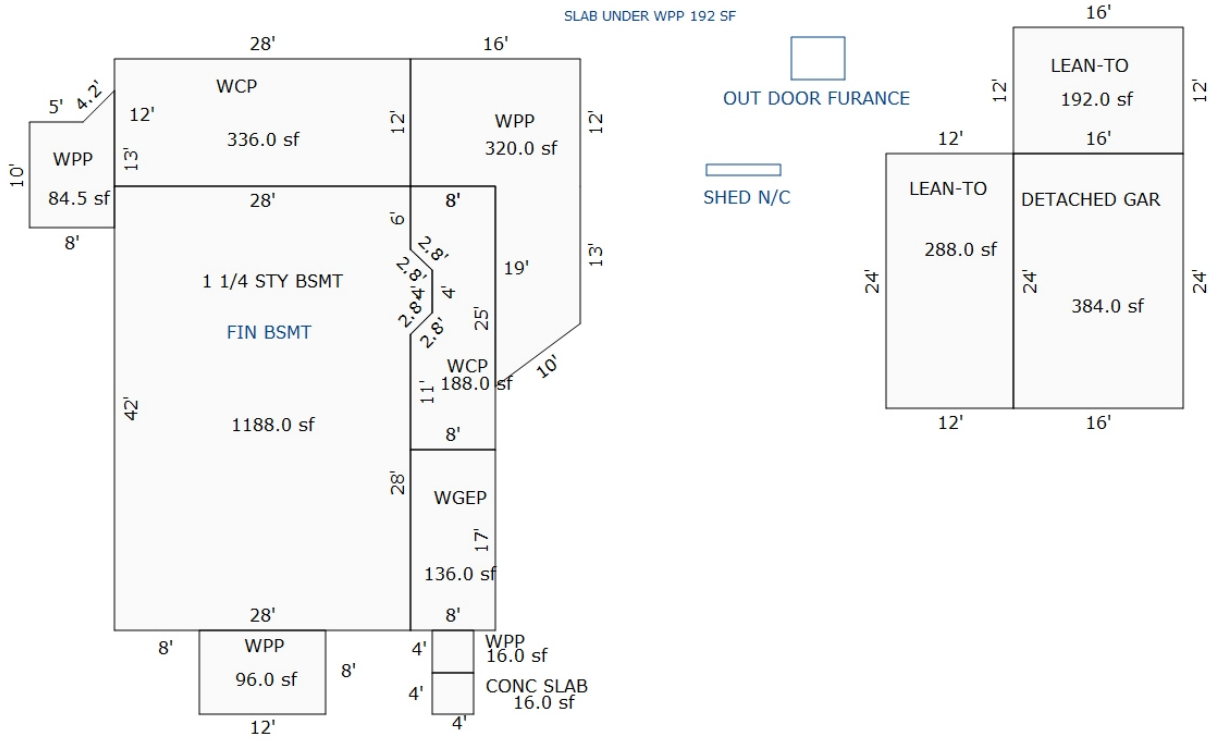

Sketch by Apex Sketch

*** Information herein deemed reliable but not guaranteed***

Parcel Number: 2410-04-2103 Jurisdiction: GREENWOOD TWP County: WEXFORD Printed on 02/15/2024

Grantor	Grantee	Sale Price	Sale Date	Inst. Type	Terms of Sale	Liber & Page	Verified By	Prcnt. Trans.
ARLT, MICHAEL R & TAMMY J	ARLT, MICHAEL R & TAMMY J	0	04/22/2022	QC	21-NOT USED/OTHER	692/2849	DEED	0.0
ARLT, MICHAEL R	ARLT, MICHAEL R & TAMMY J	0	07/15/2019	QC	21-NOT USED/OTHER	685/1357	DEED	0.0
ARLT, MICHAEL R & CHRISTIN	ARLT, MICHAEL R	0	09/28/2011	QC	09-FAMILY	642/1376	DEED	0.0

Property Address

11851 N 29 1/2 RD

Owner's Name/Address

ARLT, MICHAEL R & TAMMY J
11851 N 29 1/2 RD
KINGSLEY MI 49649

Tax Description

S 630 FT OF N 1323 FT OF E 693 FT OF NE1/4 OF FRL NW 1/4 --10.02 A. M/L-- GW. SEC. 4 T24N R10W -KINGSLEY-

Comments/Influences

The Equalizer. Copyright (c) 1999 - 2009. Licensed To: Township of Greenwood, County of Wexford, Michigan

Class: RESIDENTIAL-IMPROV Zoning:
School: KINGSLEY AREA SCHOOL
P.R.E. 100% 09/20/2019
:
2024 Est TCV 230,190 TCV/TFA: 146.80

Building Permit(s)	Date	Number	Status
OTHER	01/18/2022	PB22-0007	ENTERED
RESIDENTIAL - REMODEL	08/17/2004	PE16342	

X Improved | Vacant

Public Improvements

- X Gravel Road
- X Electric
- X OPEN

Dirt Road, Paved Road, Storm Sewer, Sidewalk, Water, Sewer, Gas, Curb, Street Lights, Standard Utilities, Underground Utils.

Topography of Site

- X Level
- X Rolling

Low, High, Landscaped, Swamp, Wooded, Pond, Waterfront, Ravine, Wetland, Flood Plain

Who	When	What
GLA	10/31/2022	INSPECTION
GLA	06/11/2015	INSPECTION

Land Value Estimates for Land Table 4010.LAND VALUES

Description	Frontage	Depth	* Factors * Front	Depth	Rate	%Adj.	Reason	Value
ACREAGE			9.550 Acres		4,687	100		44,765
ROW			0.470 Acres		0	100		0
			10.02 Total Acres		Total Est. Land Value =			44,765

Land Improvement Cost Estimates

Description	Rate	Size	% Good	Cash Value
D/W/P: 4in Concrete	7.01	528	45	1,665
Wood Frame	22.73	448	70	7,128
Total Estimated Land Improvements True Cash Value =				8,793

Year	Land Value	Building Value	Assessed Value	Board of Review	Tribunal/ Other	Taxable Value
2024	22,400	92,700	115,100			50,595C
2023	12,800	76,600	89,400			48,186C
2022	11,800	65,200	77,000			45,892C
2021	12,000	66,100	78,100			44,426C

*** Information herein deemed reliable but not guaranteed***

Building Type

X	Single Family
	Mobile Home
	Town Home
	Duplex
	A-Frame
X	Wood Frame

Building Style: PLAIN

Yr Built	Remodeled
1981	0

Condition: Good

Room List

	Basement
	1st Floor
	2nd Floor
	Bedrooms

(1) Exterior

X	Wood/Shingle
	Aluminum/Vinyl
	Brick
X	Insulation

(2) Windows

X	Many Avg. Few	X	Large Avg. Small

X	Wood Sash
	Metal Sash
	Vinyl Sash
	Double Hung
	Horiz. Slide
	Casement
	Double Glass
	Patio Doors
X	Storms & Screens

(3) Roof

X	Gable		Gambrel
	Hip		Mansard
	Flat		Shed

X	Asphalt Shingle

Chimney:

(3) Roof (cont.)

	Eavestrough
X	Insulation
0	Front Overhang
0	Other Overhang

(4) Interior

X	Drywall Paneled		Plaster Wood T&G

Trim & Decoration

	Ex	X	Ord		Min

Size of Closets

	Lg	X	Ord		Small

Doors:		Solid	X	H.C.	

(5) Floors

Kitchen:
Other: Linoleum
Other: Carpeted

(6) Ceilings

X	Drywall

(7) Excavation

Basement: 1568 S.F.
Crawl: 0 S.F.
Slab: 0 S.F.
Height to Joists: 0.0

(8) Basement

	Conc. Block
	Poured Conc.
	Stone
	Treated Wood
	Concrete Floor

(9) Basement Finish

	Recreation SF
	Living SF
	Walkout Doors (B)
	No Floor SF
	Walkout Doors (A)

(10) Floor Support

Joists:
Unsupported Len:
Cntr.Sup:

(11) Heating/Cooling

X	Gas		Oil		Elec.
	Wood		Coal		Steam

	Forced Air w/o Ducts
X	Forced Air w/ Ducts
	Forced Hot Water
	Electric Baseboard
	Elec. Ceil. Radiant
	Radiant (in-floor)
	Electric Wall Heat
	Space Heater
	Wall/Floor Furnace
	Forced Heat & Cool
	Heat Pump
	No Heating/Cooling

X	Central Air
	Wood Furnace

(12) Electric

150	Amps Service

No./Qual. of Fixtures

	Ex.	X	Ord.		Min

No. of Elec. Outlets

	Many	X	Ave.		Few

(13) Plumbing

2	Average Fixture(s)
	3 Fixture Bath
	2 Fixture Bath
	Softener, Auto
	Softener, Manual
	Solar Water Heat
	No Plumbing
	Extra Toilet
	Extra Sink
	Separate Shower
	Ceramic Tile Floor
	Ceramic Tile Wains
	Ceramic Tub Alcove
	Vent Fan

(14) Water/Sewer

	Public Water
	Public Sewer
1	Water Well
1	1000 Gal Septic
	2000 Gal Septic

Lump Sum Items:

(15) Built-ins

	Appliance Allow.
	Cook Top
	Dishwasher
	Garbage Disposal
	Bath Heater
	Vent Fan
	Hot Tub
	Unvented Hood
	Vented Hood
	Intercom
	Jacuzzi Tub
	Jacuzzi repl.Tub
	Oven
	Microwave
	Standard Range
	Self Clean Range
	Sauna
	Trash Compactor
	Central Vacuum
	Security System

(15) Fireplaces

	Interior 1 Story
	Interior 2 Story
	2nd/Same Stack
	Two Sided
	Exterior 1 Story
	Exterior 2 Story
	Prefab 1 Story
	Prefab 2 Story
	Heat Circulator
	Raised Hearth
	Wood Stove
	Direct-Vented Gas

Class: CD
Effec. Age: 42
Floor Area: 1,568
Total Base New : 234,802 E.C.F.
Total Depr Cost: 136,185 X 1.297
Estimated T.C.V: 176,632

(16) Porches/Decks

Area	Type
105	WPP
121	CGEP (2 Story)

(17) Garage

Year Built:
Car Capacity:
Class:
Exterior:
Brick Ven.:
Stone Ven.:
Common Wall:
Foundation:
Finished ?:
Auto. Doors:
Mech. Doors:
Area:
% Good:
Storage Area:
No Conc. Floor:

Bsmnt Garage:

Carport Area:
Roof:

Cost Est. for Res. Bldg: 1 Single Family PLAIN Cls CD Blt 1981
(11) Heating System: Forced Air w/ Ducts , Wood Furnace Add-On
Ground Area = 1568 SF Floor Area = 1568 SF.
Phy/Ab.Phy/Func/Econ/Comb. % Good=58/100/100/100/58
Building Areas

Stories	Exterior	Foundation	Size	Cost New	Depr. Cost
1 Story	Siding	Basement	1,568		
			Total:	200,415	116,241
Other Additions/Adjustments					
Plumbing					
3 Fixture Bath			1	3,887	2,254
Water/Sewer					
1000 Gal Septic			1	4,582	2,658
Water Well, 100 Feet			1	5,680	3,294
Porches					
WPP			105	2,685	1,557
CGEP (2 Story)			121	12,553	7,281
Local Cost Items					
OUTSIDE FURNACE			1	5,000	2,900
			Totals:	234,802	136,185

Notes:

ECF (RESIDENTIAL) 1.297 => TCV: 176,632

*** Information herein deemed reliable but not guaranteed***

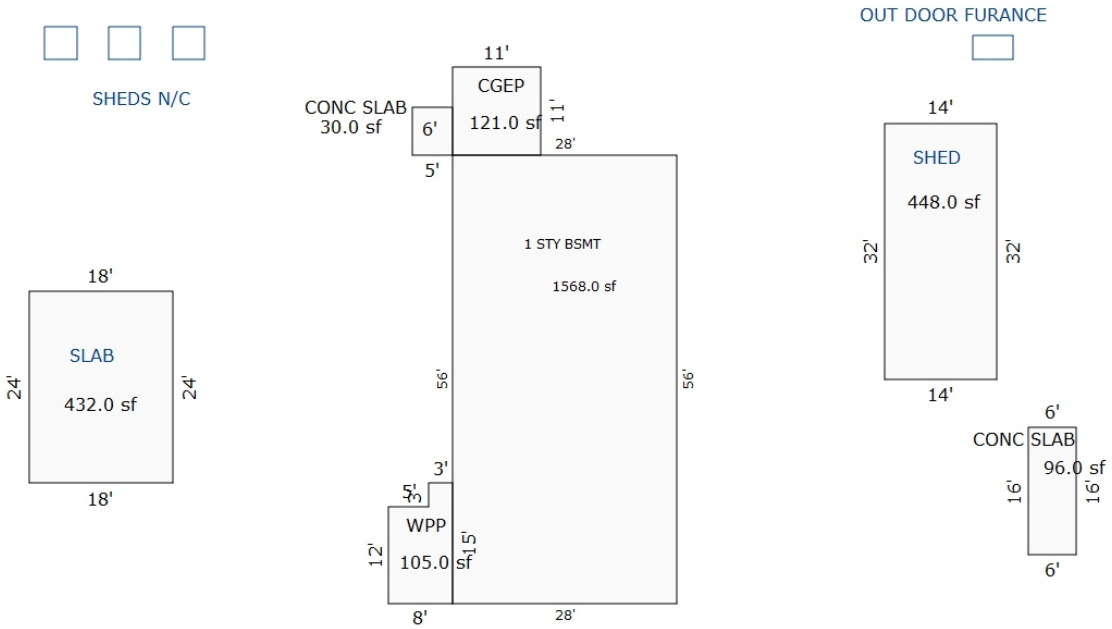

Sketch by Apex Sketch

*** Information herein deemed reliable but not guaranteed***

Parcel Number: 2410-04-2104 Jurisdiction: GREENWOOD TWP County: WEXFORD Printed on 02/15/2024

Grantor	Grantee	Sale Price	Sale Date	Inst. Type	Terms of Sale	Liber & Page	Verified By	Prcnt. Trans.
SEITZ, BRIAN L & VESTA	SEITZ, BRIAN LEROY	0	03/10/2022	QC	06-COURT JUDGEMENT	692/2592	DEED	0.0
SEITZ, ALLEN	SEITZ, BRIAN & VESTA	21,500	11/10/1998	WD	03-ARM'S LENGTH	364:484	DEED	0.0

Property Address

2344 E COUNTY LINE RD

Owner's Name/Address

SEITZ, BRIAN LEROY
2344 E COUNTY LINE RD
KINGSLEY MI 49649-9644

Tax Description

COM AT NW COR OF E 693' OF N 1323' OF NW FRL 1/4: TH W 208.75 FT; S 417.50'; E 208.75 FT; N 417.50' TO POB. - 2 A. M/L GW. SEC. 4 T24N R10W -KINGSLEY-

Comments/Influences

Class: RESIDENTIAL-IMPROV Zoning:

School: KINGSLEY AREA SCHOOL

P.R.E. 100% / /

:

2024 Est TCV 318,899 TCV/TFA: 184.55

Building Permit(s)	Date	Number	Status
RESIDENTIAL - REMODEL	05/16/2001	PM4986	
RESIDENTIAL - NEW	02/23/2001	PE13518	
RESIDENTIAL - NEW	02/23/2001	PM4857	
RESIDENTIAL - NEW	02/23/2001	PP2108	

X Improved | Vacant

Public Improvements

- Dirt Road
- Gravel Road
- X Paved Road
- Storm Sewer
- Sidewalk
- Water
- Sewer
- X Electric
- Gas
- Curb
- Street Lights
- Standard Utilities
- Underground Utils.

Topography of Site

- X Level
- X Rolling
- Low
- High
- Landscaped
- Swamp
- Wooded
- Pond
- Waterfront
- Ravine
- Wetland
- Flood Plain
- X OPEN

Who When What

GLA 10/31/2022 INSPECTION
GLA 09/07/2015 INSPECTION

Land Value Estimates for Land Table 4010.LAND VALUES

Description	Frontage	Depth	* Factors * Front	Depth	Rate	%Adj.	Reason	Value
ACREAGE			1.842 Acres		6,937	100		12,779
ROW			0.158 Acres		0	100		0
			2.00 Total Acres		Total Est. Land Value =			12,779

Land Improvement Cost Estimates

Description	Rate	Size	% Good	Cash Value
D/W/P: 4in Concrete	7.01	926	57	3,700
Total Estimated Land Improvements True Cash Value =				3,700

Year	Land Value	Building Value	Assessed Value	Board of Review	Tribunal/ Other	Taxable Value
2024	6,400	153,000	159,400			78,118C
2023	5,200	125,000	130,200			74,399C
2022	4,300	105,400	109,700			70,857C
2021	4,800	106,500	111,300			68,594C

The Equalizer. Copyright (c) 1999 - 2009. Licensed To: Township of Greenwood, County of Wexford, Michigan

*** Information herein deemed reliable but not guaranteed***

Building Type

X	Single Family
	Mobile Home
	Town Home
	Duplex
	A-Frame
X	Wood Frame

Building Style: PLAIN

Yr Built	Remodeled
2002	0

Condition: Good

Room List

	Basement
	1st Floor
	2nd Floor
	Bedrooms

(1) Exterior

	Wood/Shingle
X	Aluminum/Vinyl
	Brick
X	Insulation

(2) Windows

	Many		Large
X	Avg.	X	Avg.
	Few		Small

	Wood Sash
	Metal Sash
X	Vinyl Sash
	Double Hung
	Horiz. Slide
	Casement
	Double Glass
	Patio Doors
X	Storms & Screens

(3) Roof

X	Gable		Gambrel
	Hip		Mansard
	Flat		Shed

X	Asphalt Shingle

Chimney:

(3) Roof (cont.)

	Eavestrough
X	Insulation
0	Front Overhang
0	Other Overhang

(4) Interior

X	Drywall		Plaster
	Paneled		Wood T&G

Trim & Decoration

	Ex	X	Ord		Min

Size of Closets

	Lg	X	Ord		Small

Doors:		Solid	X	H.C.	

(5) Floors

Kitchen:
Other: Linoleum
Other: Carpeted

(6) Ceilings

X	Drywall		

(7) Excavation

Basement: 1680 S.F.
Crawl: 0 S.F.
Slab: 0 S.F.
Height to Joists: 0.0

(8) Basement

	Conc. Block
	Poured Conc.
	Stone
	Treated Wood
	Concrete Floor

(9) Basement Finish

	Recreation SF
	Living SF
	Walkout Doors (B)
	No Floor SF
	Walkout Doors (A)

(10) Floor Support

Joists:
Unsupported Len:
Cntr.Sup:

(11) Heating/Cooling

X	Gas		Oil		Elec.
	Wood		Coal		Steam

	Forced Air w/o Ducts
X	Forced Air w/ Ducts
	Forced Hot Water
	Electric Baseboard
	Elec. Ceil. Radiant
	Radiant (in-floor)
	Electric Wall Heat
	Space Heater
	Wall/Floor Furnace
	Forced Heat & Cool
	Heat Pump
	No Heating/Cooling

	Central Air
	Wood Furnace

(12) Electric

150	Amps Service

No./Qual. of Fixtures

	Ex.	X	Ord.		Min

No. of Elec. Outlets

	Many	X	Ave.		Few

(13) Plumbing

	Average Fixture(s)
2	3 Fixture Bath
	2 Fixture Bath
	Softener, Auto
	Softener, Manual
	Solar Water Heat
	No Plumbing
	Extra Toilet
	Extra Sink
	Separate Shower
	Ceramic Tile Floor
	Ceramic Tile Wains
	Ceramic Tub Alcove
	Vent Fan

(14) Water/Sewer

	Public Water
	Public Sewer
1	Water Well
1	1000 Gal Septic
	2000 Gal Septic

Lump Sum Items:

(15) Built-ins

	Appliance Allow.
	Cook Top
	Dishwasher
	Garbage Disposal
	Bath Heater
	Vent Fan
	Hot Tub
	Unvented Hood
	Vented Hood
	Intercom
	Jacuzzi Tub
	Jacuzzi repl.Tub
	Oven
	Microwave
	Standard Range
	Self Clean Range
	Sauna
	Trash Compactor
	Central Vacuum
	Security System

(15) Fireplaces

	Interior 1 Story
	Interior 2 Story
	2nd/Same Stack
	Two Sided
	Exterior 1 Story
	Exterior 2 Story
	Prefab 1 Story
	Prefab 2 Story
	Heat Circulator
	Raised Hearth
	Wood Stove
	Direct-Vented Gas

Class: CD
Effec. Age: 21
Floor Area: 1,728
Total Base New : 295,150 E.C.F.
Total Depr Cost: 233,169 X 1.297
Estimated T.C.V: 302,420

(16) Porches/Decks

Area	Type
144	WCP (1 Story)
528	WPP

(17) Garage

Year Built: 2002
Car Capacity:
Class: CD
Exterior: Siding
Brick Ven.: 0
Stone Ven.: 0
Common Wall: 1 Wall
Foundation: 42 Inch
Finished ?:
Auto. Doors: 0
Mech. Doors: 0
Area: 672
% Good: 0
Storage Area: 0
No Conc. Floor: 0

Bsmnt Garage:

Carport Area:
Roof:

Cost Est. for Res. Bldg: 1 Single Family PLAIN Cls CD Blt 2002
(11) Heating System: Forced Air w/ Ducts
Ground Area = 1680 SF Floor Area = 1728 SF.
Phy/Ab.Phy/Func/Econ/Comb. % Good=79/100/100/100/79
Building Areas

Stories	Exterior	Foundation	Size	Cost New	Depr. Cost
1 Story	Siding	Basement	1,680		
1 Story	Siding	Overhang	48		
		Total:		213,884	168,968
Other Additions/Adjustments					
Plumbing					
3 Fixture Bath			1	3,887	3,071
Water/Sewer					
1000 Gal Septic			1	4,582	3,620
Water Well, 100 Feet			1	5,680	4,487
Porches					
WCP (1 Story)			144	5,777	4,564
WPP			528	7,857	6,207
Garages					
Class: CD Exterior: Siding Foundation: 42 Inch (Unfinished)					
Base Cost			672	24,985	19,738
Common Wall: 1 Wall			1	-2,529	-1,998
Class: D Exterior: Pole (Unfinished)					
Base Cost			240	7,363	5,817
Class: CD Exterior: Pole (Unfinished)					
Base Cost			1088	23,664	18,695
		Totals:		295,150	233,169

Notes:

ECF (RESIDENTIAL) 1.297 => TCV: 302,420

*** Information herein deemed reliable but not guaranteed***

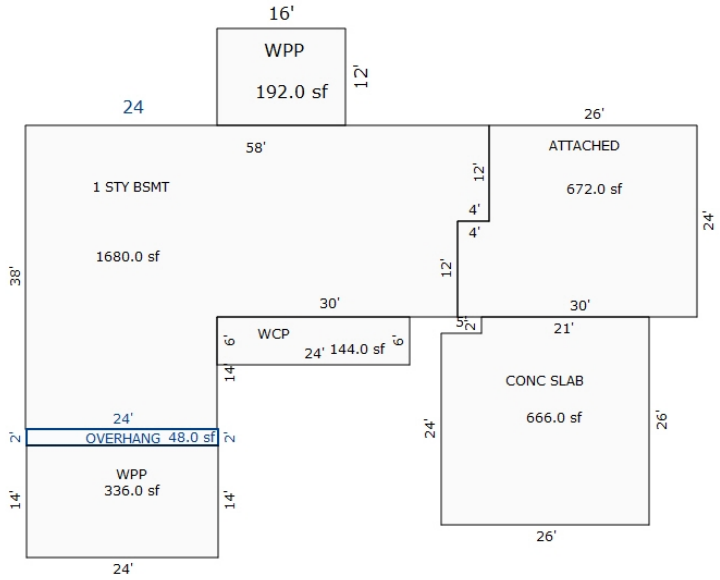

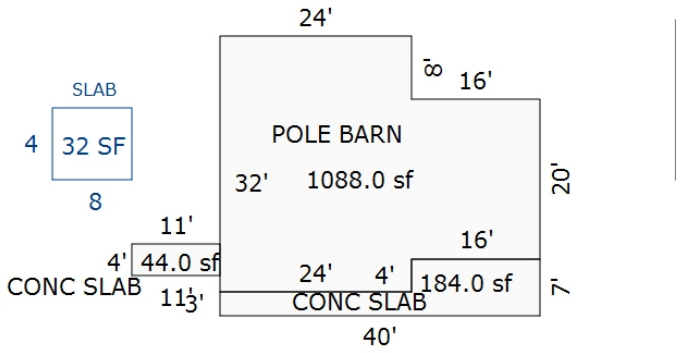

Sketch by Apex Sketch

*** Information herein deemed reliable but not guaranteed***

Parcel Number: 2410-04-2105 Jurisdiction: GREENWOOD TWP County: WEXFORD Printed on 02/15/2024

Grantor	Grantee	Sale Price	Sale Date	Inst. Type	Terms of Sale	Liber & Page	Verified By	Prcnt. Trans.
ARLT, ROY R & SUSAN K	BAKER, JOHN M & BETTY S CI	9,000	07/07/2008	MLC	32-SPLIT VACANT	614/1356	DEED	0.0
MIDDAUGH, HOLLY L	BAKER, JOHN M & BETTY S CI	59,000	08/04/2007	LC	03-ARM'S LENGTH	692/776	DEED	0.0
ARLT, SUSAN K	MIDDAUGH, HOLLY L	59,000	07/27/2007	WD	03-ARM'S LENGTH	602/2956	DEED	100.0

Property Address

Owner's Name/Address

BAKER, JOHN M & BETTY S CLOUS
HOLLY L MIDDAUGH
2276 E COUNTY LINE RD
KINGSLEY MI 49649

Tax Description

PAR COM AT NW COR OF E 693 FT OF N 1323 FT OF FRL NW 1/4; TH W 626.25 FT TO POB: S 417.5 FT; E 313 FT; N 417.5 FT; W 313 FT TO POB. 3 A. M/L GW. SEC. 4 T24N R10W - KINGSLEY- PORTION SPLIT FROM 04-2101 9/16/08

Comments/Influences

Class: RESIDENTIAL-IMPROV Zoning:

School: KINGSLEY AREA SCHOOL

P.R.E. 100% 07/24/2008

:

2024 Est TCV 59,848 TCV/TFA: 64.77

Building Permit(s)	Date	Number	Status
MOBILE HOME	09/13/2005	PE17095	
MOBILE HOME	09/13/2005	PP3991	
MOBILE HOME	09/12/2005	PB12920	
MOBILE HOME	08/20/2002	PM6142	

X Improved | Vacant

Public Improvements

- Dirt Road
- Gravel Road
- X Paved Road
- Storm Sewer
- Sidewalk
- Water
- Sewer
- X Electric
- Gas
- Curb
- Street Lights
- Standard Utilities
- Underground Utils.

Topography of Site

- X Level
- X Rolling
- Low
- High
- Landscaped
- X Swamp
- Wooded
- Pond
- Waterfront
- Ravine
- Wetland
- Flood Plain
- X OPEN

Who	When	What
GLA	10/31/2022	INSPECTION
GLA	06/11/2015	INSPECTION

Land Value Estimates for Land Table 4010.LAND VALUES

Description	Frontage	Depth	* Factors * Front	Depth	Rate	%Adj.	Reason	Value
HELSEL RIV LOW	417.00	313.00	1.0000	0.0000	315	100*		0
ACREAGE			2.770 Acres		5,546	100		15,362
ROW			0.230 Acres		0	100		0

* denotes lines that do not contribute to the total acreage calculation.
417 Actual Front Feet, 3.00 Total Acres Total Est. Land Value = 15,362

Land Improvement Cost Estimates

Description	Rate	Size	% Good	Cash Value
Wood Frame	22.38	192	36	1,547
Wood Frame	21.86	224	36	1,763
Total Estimated Land Improvements True Cash Value =				3,310

Year	Land Value	Building Value	Assessed Value	Board of Review	Tribunal/ Other	Taxable Value
2024	7,700	22,200	29,900			16,945C
2023	7,000	18,200	25,200			16,139C
2022	6,100	15,400	21,500			15,371C
2021	5,800	13,400	19,200			14,880C

The Equalizer. Copyright (c) 1999 - 2009.
Licensed To: Township of Greenwood, County of Wexford, Michigan

*** Information herein deemed reliable but not guaranteed***

Building Type

	Single Family
X	Mobile Home
	Town Home
	Duplex
	A-Frame
X	Wood Frame

Building Style: SWT/DWT

Yr Built	Remodeled
0	0

Condition: Fair

Room List

	Basement
	1st Floor
	2nd Floor
	Bedrooms

(1) Exterior

	Wood/Shingle
	Aluminum/Vinyl
	Brick
X	Aluminum
	Insulation

(2) Windows

X	Many Avg. Few	X	Large Avg. Small

	Wood Sash
X	Metal Sash
	Vinyl Sash
X	Double Hung
	Horiz. Slide
	Casement
	Double Glass
	Patio Doors
X	Storms & Screens

(3) Roof

X	Gable		Gambrel
	Hip		Mansard
	Flat		Shed

X	Asphalt Shingle
	Metal

Chimney:

(3) Roof (cont.)

	Eavestrough
	Insulation
0	Front Overhang
0	Other Overhang

(4) Interior

	Drywall		Plaster
	Paneled		Wood T&G

Trim & Decoration

	Ex	X	Ord		Min

Size of Closets

	Lg	X	Ord		Small

Doors:		Solid	X	H.C.	

(5) Floors

Kitchen:
Other:
Other:

(6) Ceilings

(7) Excavation

Basement: 0 S.F.
Crawl: 0 S.F.
Slab: 0 S.F.
Height to Joists: 0.0

(8) Basement

	Conc. Block
	Poured Conc.
	Stone
	Treated Wood
	Concrete Floor

(9) Basement Finish

	Recreation	SF
	Living	SF
	Walkout Doors (B)	
	No Floor	SF
	Walkout Doors (A)	

(10) Floor Support

Joists:
Unsupported Len:
Cntr.Sup:

(11) Heating/Cooling

X	Gas		Oil		Elec.
	Wood		Coal		Steam

X	Forced Warm Air
	Wall Furnace
	Warm & Cool Air
	Heat Pump

	Central Air
	Wood Furnace

(12) Electric

0	Amps Service

No./Qual. of Fixtures

	Ex.	X	Ord.		Min

No. of Elec. Outlets

	Many	X	Ave.		Few

(13) Plumbing

1	Average Fixture(s)
	3 Fixture Bath
	2 Fixture Bath
	Softener, Auto
	Softener, Manual
	Solar Water Heat
	No Plumbing
	Extra Toilet
	Extra Sink
	Separate Shower
	Ceramic Tile Floor
	Ceramic Tile Wains
	Ceramic Tub Alcove
	Vent Fan

(14) Water/Sewer

	Public Water
	Public Sewer
1	Water Well
1	1000 Gal Septic
	2000 Gal Septic

Lump Sum Items:

(15) Built-ins

	Appliance Allow.
	Cook Top
	Dishwasher
	Garbage Disposal
	Bath Heater
	Vent Fan
	Hot Tub
	Unvented Hood
	Vented Hood
	Intercom
	Jacuzzi Tub
	Jacuzzi repl.Tub
	Oven
	Microwave
	Standard Range
	Self Clean Range
	Sauna
	Trash Compactor
	Central Vacuum
	Security System

(15) Fireplaces

	Interior 1 Story
	Interior 2 Story
	2nd/Same Stack
	Two Sided
	Exterior 1 Story
	Exterior 2 Story
	Prefab 1 Story
	Prefab 2 Story
	Heat Circulator
	Raised Hearth
	Wood Stove
	Direct-Vented Gas

Class: Fair
Effec. Age: 20
Floor Area:
Total Base New : 69,277 E.C.F.
Total Depr Cost: 31,747 X 1.297
Estimated T.C.V: 41,176

(16) Porches/Decks

Area	Type
84	Treated Wood
72	Treated Wood

(17) Garage

Year Built:
Car Capacity:
Class:
Exterior:
Brick Ven.:
Stone Ven.:
Common Wall:
Foundation:
Finished ?:
Auto. Doors:
Mech. Doors:
Area:
% Good:
Storage Area:
No Conc. Floor:

Bsmnt Garage:

Carport Area:
Roof:

Cost Est. for Res. Bldg: 1 Mobile Home SWT/DWT Cls Fair Blt 0
(11) Heating System: Forced Warm Air
Ground Area = 924 SF Floor Area = 924 SF.
Phy/Ab.Phy/Func/Econ/Comb. % Good=46/100/100/100/46
Building Areas

Type	Ext. Walls	Roof/Fnd.	Size	Cost New	Depr. Cost	
Main Home	Ribbed	Metal	924			
			Total:	49,835	22,923	
Other Additions/Adjustments						
Skirting, Metal or Vinyl, Vertical			160	1,784	821	
Water/Sewer						
1000 Gal Septic			1	4,582	2,108	
Water Well, 100 Feet			1	5,680	2,613	
Deck						
Treated Wood			84	2,293	1,055	
Treated Wood			72	2,107	969	
Local Cost Items						
SHED #2			192	1,498	629	*4
SHED #3			192	1,498	629	*4
			Totals:	69,277	31,747	

Notes:
ECF (RESIDENTIAL) 1.297 => TCV: 41,176

*** Information herein deemed reliable but not guaranteed***

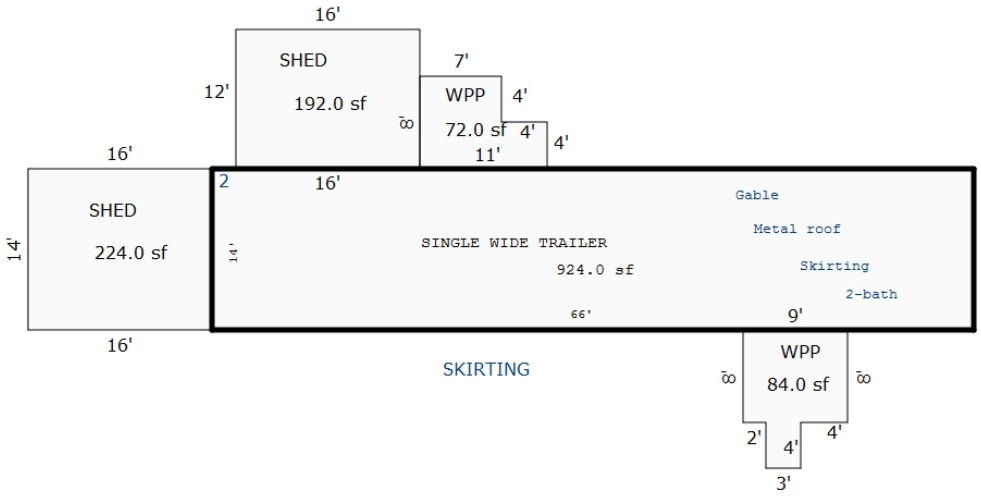

Sketch by Apex Sketch

*** Information herein deemed reliable but not guaranteed***

Parcel Number: 2410-04-2106 Jurisdiction: GREENWOOD TWP County: WEXFORD Printed on 02/15/2024

Grantor	Grantee	Sale Price	Sale Date	Inst. Type	Terms of Sale	Liber & Page	Verified By	Prcnt. Trans.
CAVERSON, MATTHEW B & HELE	CAVERSON, HELEN	1	08/05/2020	WD	21-NOT USED/OTHER	688/292	AGENT	0.0
CAVERSON, HELEN	CAVERSON, HELEN LE	1	08/05/2020	QC	18-LIFE ESTATE	688/1039	AGENT	0.0
CAVERSON, MATTHEW B & HELE	CAVERSON, MATTHEW B & HELE	0	08/01/2019	QC	21-NOT USED/OTHER	6851/748	DEED	0.0
BRAND, DONALD M & AMANDA L	POSTMA, HELEN	270,000	09/05/2018	WD	03-ARM'S LENGTH	683 /1359	DEED	100.0

Property Address

2348 E COUNTY LINE RD

Owner's Name/Address

CAVERSON, HELEN LE
P O BOX 648
KINGSLEY MI 49649

Tax Description

COM AT N 1/4 COR OF SEC; W 693 FT; S 417.5 FT TO POB: S 417.5 FT; W 208.75 FT; N 417.5 FT; E 208.75 FT TO POB. TOG W/EASMT --2 A M/L-- GW SEC 4 T24N R10W -KINGSLEY- [[ASSESSED W/ 04-2101 '00

Comments/Influences

The Equalizer. Copyright (c) 1999 - 2009. Licensed To: Township of Greenwood, County of Wexford, Michigan

Class: RESIDENTIAL-IMPROV Zoning:

School: KINGSLEY AREA SCHOOL

P.R.E. 100% 04/05/2019

:

2024 Est TCV 383,175 TCV/TFA: 288.10

Building Permit(s)	Date	Number	Status
Res. Add/Alter/Repair	08/31/2017	PB17-0171	COMPLETE
Foundation	12/02/2014	PB14--0085	COMPLETE
Permit renewal (50% of ori	06/27/2008	PB08-0139	
RESIDENTIAL - NEW	02/28/2007	PB13460	

X Improved | Vacant

Public Improvements

- X Dirt Road
- Gravel Road
- X Paved Road
- Storm Sewer
- Sidewalk
- Water
- Sewer
- X Electric
- Gas
- Curb
- Street Lights
- Standard Utilities
- Underground Utils.

Topography of Site

- Level
- X Rolling
- Low
- High
- Landscaped
- Swamp
- Wooded
- Pond
- Waterfront
- Ravine
- Wetland
- Flood Plain
- X OPEN

Who	When	What
GLA	05/13/2021	INSPECTION
GLA	12/02/2014	INSPECTION

Land Value Estimates for Land Table 4010.LAND VALUES

Description	Frontage	Depth	* Factors * Front	Depth	Rate	%Adj.	Reason	Value
HELSEL RIV LOW	208.75	0.00	1.0000	0.0000	315	100*		0
ACREAGE			2.000	Acres	5,546	100		11,092

* denotes lines that do not contribute to the total acreage calculation.

209 Actual Front Feet, 2.00 Total Acres Total Est. Land Value = 11,092

Land Improvement Cost Estimates

Description	Rate	Size	% Good	Cash Value
D/W/P: 3.5 Concrete	6.63	132	60	525
D/W/P: 3.5 Concrete	6.63	1384	60	5,506
D/W/P: 3.5 Concrete	6.63	12	60	48
D/W/P: 3.5 Concrete	6.63	136	60	541
Total Estimated Land Improvements True Cash Value =				6,620

Year	Land Value	Building Value	Assessed Value	Board of Review	Tribunal/ Other	Taxable Value
2024	5,500	186,100	191,600			144,194C
2023	5,500	152,200	157,700			137,328C
2022	4,500	128,700	133,200			130,789C
2021	4,900	131,300	136,200			128,021C

*** Information herein deemed reliable but not guaranteed***

Building Type

X	Single Family
	Mobile Home
	Town Home
	Duplex
	A-Frame
X	Wood Frame

Building Style: PLAIN

Yr Built	Remodeled
2008	2017

Condition: Good

Room List

2	Basement
6	1st Floor
1	2nd Floor
4	Bedrooms

(1) Exterior

	Wood/Shingle
X	Aluminum/Vinyl
	Brick
X	Insulation

(2) Windows

X	Many Avg. Few	X	Large Avg. Small

	Wood Sash
	Metal Sash
X	Vinyl Sash
X	Double Hung
	Horiz. Slide
	Casement
	Double Glass
X	Patio Doors
X	Storms & Screens

(3) Roof

X	Gable		Gambrel
	Hip		Mansard
	Flat		Shed

X	Asphalt Shingle

Chimney:

(3) Roof (cont.)

	Eavestrough
X	Insulation
0	Front Overhang
0	Other Overhang

(4) Interior

X	Drywall Paneled		Plaster
		X	Wood T&G

Trim & Decoration

	Ex	X	Ord		Min

Size of Closets

	Lg	X	Ord		Small

Doors:		Solid	X	H.C.	

(5) Floors

Kitchen: Hardwood
Other: Tile
Other: Carpeted

(6) Ceilings

X	Vaulted

(7) Excavation

Basement: 1064 S.F.
Crawl: 0 S.F.
Slab: 0 S.F.
Height to Joists: 0.0

(8) Basement

	Conc. Block
	Poured Conc.
	Stone
	Treated Wood
	Concrete Floor

(9) Basement Finish

	Recreation	SF
944	Living	SF
1	Walkout Doors	(B)
	No Floor	SF
	Walkout Doors	(A)

(10) Floor Support

Joists:
Unsupported Len:
Cntr.Sup:

(11) Heating/Cooling

X	Gas		Oil		Elec.
	Wood		Coal		Steam

	Forced Air w/o Ducts
X	Forced Air w/ Ducts
	Forced Hot Water
	Electric Baseboard
	Elec. Ceil. Radiant
	Radiant (in-floor)
	Electric Wall Heat
	Space Heater
	Wall/Floor Furnace
	Forced Heat & Cool
	Heat Pump
	No Heating/Cooling

	Central Air
	Wood Furnace

(12) Electric

150	Amps Service

No./Qual. of Fixtures

	Ex.	X	Ord.		Min

No. of Elec. Outlets

	Many	X	Ave.		Few

(13) Plumbing

	Average Fixture(s)
2	3 Fixture Bath
1	2 Fixture Bath
	Softener, Auto
	Softener, Manual
	Solar Water Heat
	No Plumbing
	Extra Toilet
	Extra Sink
	Separate Shower
	Ceramic Tile Floor
	Ceramic Tile Wains
	Ceramic Tub Alcove
	Vent Fan

(14) Water/Sewer

	Public Water
	Public Sewer
1	Water Well
1	1000 Gal Septic
	2000 Gal Septic

Lump Sum Items:

(15) Built-ins

	Appliance Allow.
	Cook Top
	Dishwasher
	Garbage Disposal
	Bath Heater
	Vent Fan
	Hot Tub
	Unvented Hood
	Vented Hood
	Intercom
	Jacuzzi Tub
	Jacuzzi repl.Tub
	Oven
	Microwave
	Standard Range
	Self Clean Range
	Sauna
	Trash Compactor
	Central Vacuum
	Security System

(15) Fireplaces

1	Interior 1 Story
	Interior 2 Story
	2nd/Same Stack
	Two Sided
	Exterior 1 Story
	Exterior 2 Story
	Prefab 1 Story
	Prefab 2 Story
	Heat Circulator
	Raised Hearth
	Wood Stove
	Direct-Vented Gas

Class: C
Effec. Age: 13
Floor Area: 1,330
Total Base New : 323,880 E.C.F.
Total Depr Cost: 281,776 X 1.297
Estimated T.C.V: 365,463

(16) Porches/Decks

Area	Type
304	WCP (1 Story)
168	WCP (1 Story)
96	WPP
192	WGEP (1 Story)
12	Treated Wood

(17) Garage

Year Built: 2015
Car Capacity:
Class: C
Exterior: Pole
Brick Ven.: 0
Stone Ven.: 0
Common Wall: Detache
Foundation: 18 Inch
Finished ?:
Auto. Doors: 0
Mech. Doors: 0
Area: 1536
% Good: 0
Storage Area: 0
No Conc. Floor: 0

Bsmnt Garage:

Carport Area:
Roof:

Cost Est. for Res. Bldg: 1 Single Family PLAIN Cls C Blt 2008
(11) Heating System: Forced Air w/ Ducts
Ground Area = 1064 SF Floor Area = 1330 SF.
Phy/Ab.Phy/Func/Econ/Comb. % Good=87/100/100/100/87
Building Areas

Stories	Exterior	Foundation	Size	Cost New	Depr. Cost
1.25 Story	Siding	Basement	1,064		
			Total:	182,459	158,740
Other Additions/Adjustments					
Basement Living Area			944	34,088	29,657
Basement, Outside Entrance, Below Grade			1	2,578	2,243
Plumbing					
3 Fixture Bath			1	4,678	4,070
2 Fixture Bath			1	3,130	2,723
Water/Sewer					
1000 Gal Septic			1	4,899	4,262
Water Well, 100 Feet			1	5,849	5,089
Porches					
WCP (1 Story)			304	10,035	8,730
WCP (1 Story)			168	7,189	6,254
WPP			96	2,866	2,493
WGEP (1 Story)			192	14,832	12,904
Fireplaces					
Interior 1 Story			1	5,376	4,677
Deck					
Treated Wood			12	552	480
Garages					
Class: C Exterior: Pole (Unfinished)					
Base Cost			1536	37,325	32,473
Local Cost Items					

<<<<< Calculations too long. See Valuation printout for complete pricing. >>>>>

*** Information herein deemed reliable but not guaranteed***

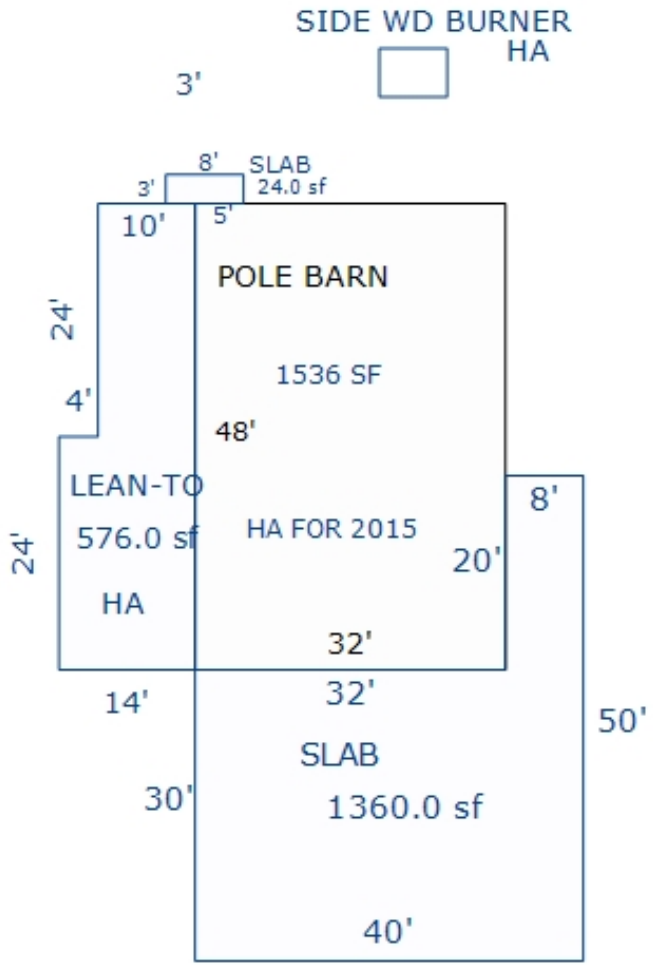

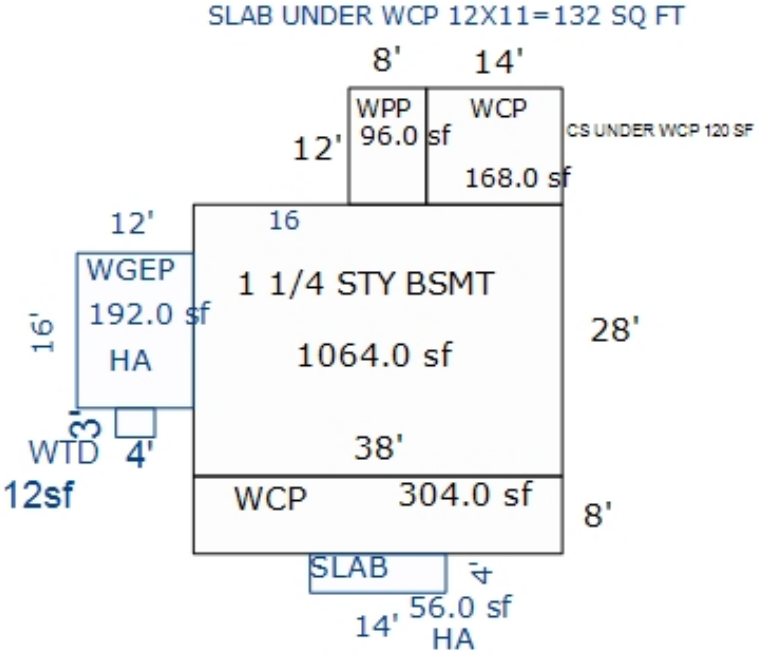

*** Information herein deemed reliable but not guaranteed***

Parcel Number: 2410-04-2202 Jurisdiction: GREENWOOD TWP County: WEXFORD Printed on 02/15/2024

Grantor	Grantee	Sale Price	Sale Date	Inst. Type	Terms of Sale	Liber & Page	Verified By	Prcnt. Trans.
ARLT, ROY R & SUSAN K LE T	ARLT, ROY R & SUSAN K	0	11/15/2017	WD	21-NOT USED/OTHER	681 /1429	DEED	0.0
ARLT, ROY R. & SUSAN K	ARLT, ROY R & SUSAN K LE T	0	10/14/2008	QC	09-FAMILY	617/1151	DEED	0.0

Property Address

2042 E COUNTY LINE RD

Owner's Name/Address

ARLT, ROY R & SUSAN K
2042 E COUNTY LINE RD
KINGSLEY MI 49649

Tax Description

W 825 FT OF N 825 FT OF NW 1/4 OF FRL NW 1/4 --15.63 A. M/L-- SUB TO & TOG W/ AN EASEMENT REC 666/1195, GW. SEC. 4 T24N R10W -KINGSLEY- SPLIT WITH 2410-04-2101 2/2013

Comments/Influences

The Equalizer. Copyright (c) 1999 - 2009. Licensed To: Township of Greenwood, County of Wexford, Michigan

Class: RESIDENTIAL-IMPROV Zoning:

School: KINGSLEY AREA SCHOOL

P.R.E. 100% / /

:

2024 Est TCV 225,729 TCV/TFA: 141.97

Building Permit(s)	Date	Number	Status

X	Improved		Vacant

	Public Improvements
	Dirt Road
	Gravel Road
X	Paved Road
	Storm Sewer
	Sidewalk
	Water
	Sewer
X	Electric
	Gas
	Curb
	Street Lights
	Standard Utilities
	Underground Utils.

	Topography of Site
	Level
X	Rolling
	Low
	High
	Landscaped
	Swamp
X	Wooded
	Pond
	Waterfront
	Ravine
	Wetland
	Flood Plain
X	OPEN/PINES

Who	When	What
GLA	10/31/2022	INSPECTION
GLA	06/11/2015	INSPECTION

Land Value Estimates for Land Table 4010.LAND VALUES

Description	Frontage	Depth	* Factors * Front	Depth	Rate	%Adj.	Reason	Value
ACREAGE			15.005 Acres		3,200	100		48,016
ROW			0.625 Acres		0	100		0
			15.63 Total Acres		Total Est. Land Value =			48,016

Land Improvement Cost Estimates

Description	Rate	Size	% Good	Cash Value
Wood Frame	18.03	608	42	4,604
Total Estimated Land Improvements True Cash Value =				4,604

Year	Land Value	Building Value	Assessed Value	Board of Review	Tribunal/ Other	Taxable Value
2024	24,000	88,900	112,900			59,032C
2023	19,500	73,400	92,900			56,221C
2022	17,300	62,700	80,000			53,544C
2021	18,000	63,800	81,800			51,834C

*** Information herein deemed reliable but not guaranteed***

Building Type

X	Single Family
	Mobile Home
	Town Home
	Duplex
	A-Frame
X	Wood Frame

Building Style: PLAIN

Yr Built	Remodeled
1986	0

Condition: Fair

Room List

	Basement
	1st Floor
	2nd Floor
	Bedrooms

(1) Exterior

X	Wood/Shingle
	Aluminum/Vinyl
	Brick
X	Insulation

(2) Windows

	Many		Large
X	Avg.	X	Avg.
	Few		Small

X	Wood Sash
	Metal Sash
	Vinyl Sash
	Double Hung
	Horiz. Slide
	Casement
	Double Glass
	Patio Doors
X	Storms & Screens

(3) Roof

X	Gable		Gambrel
	Hip		Mansard
	Flat		Shed

X	Asphalt Shingle

Chimney:

(3) Roof (cont.)

	Eavestrough
X	Insulation
0	Front Overhang
0	Other Overhang

(4) Interior

X	Drywall		Plaster
	Paneled		Wood T&G

Trim & Decoration

	Ex	X	Ord		Min

Size of Closets

	Lg	X	Ord		Small

Doors:		Solid	X	H.C.	

(5) Floors

Kitchen:
Other: Linoleum
Other: Carpeted

(6) Ceilings

X	Drywall

(7) Excavation

Basement: 1500 S.F.
Crawl: 0 S.F.
Slab: 90 S.F.
Height to Joists: 0.0

(8) Basement

	Conc. Block
	Poured Conc.
	Stone
	Treated Wood
	Concrete Floor

(9) Basement Finish

	Recreation SF
	Living SF
	Walkout Doors (B)
	No Floor SF
	Walkout Doors (A)

(10) Floor Support

Joists:
Unsupported Len:
Cntr.Sup:

(11) Heating/Cooling

X	Gas		Oil		Elec.
	Wood		Coal		Steam

	Forced Air w/o Ducts
X	Forced Air w/ Ducts
	Forced Hot Water
	Electric Baseboard
	Elec. Ceil. Radiant
	Radiant (in-floor)
	Electric Wall Heat
	Space Heater
	Wall/Floor Furnace
	Forced Heat & Cool
	Heat Pump
	No Heating/Cooling

	Central Air
	Wood Furnace

(12) Electric

150	Amps Service

No./Qual. of Fixtures

	Ex.	X	Ord.		Min

No. of Elec. Outlets

	Many	X	Ave.		Few

(13) Plumbing

1	Average Fixture(s)
	3 Fixture Bath
	2 Fixture Bath
	Softener, Auto
	Softener, Manual
	Solar Water Heat
	No Plumbing
	Extra Toilet
	Extra Sink
	Separate Shower
	Ceramic Tile Floor
	Ceramic Tile Wains
	Ceramic Tub Alcove
	Vent Fan

(14) Water/Sewer

	Public Water
	Public Sewer
1	Water Well
1	1000 Gal Septic
	2000 Gal Septic

Lump Sum Items:

(15) Built-ins

	Appliance Allow.
	Cook Top
	Dishwasher
	Garbage Disposal
	Bath Heater
	Vent Fan
	Hot Tub
	Unvented Hood
	Vented Hood
	Intercom
	Jacuzzi Tub
	Jacuzzi repl.Tub
	Oven
	Microwave
	Standard Range
	Self Clean Range
	Sauna
	Trash Compactor
	Central Vacuum
	Security System

(15) Fireplaces

	Interior 1 Story
	Interior 2 Story
	2nd/Same Stack
	Two Sided
	Exterior 1 Story
	Exterior 2 Story
	Prefab 1 Story
	Prefab 2 Story
	Heat Circulator
	Raised Hearth
	Wood Stove
	Direct-Vented Gas

Class: D
Effec. Age: 53
Floor Area: 1,590
Total Base New : 284,632 E.C.F.
Total Depr Cost: 133,469 X 1.297
Estimated T.C.V: 173,109

(16) Porches/Decks

Area	Type
36	WPP
564	WGEP (1 Story)
144	Treated Wood

(17) Garage

Year Built:
Car Capacity:
Class: D
Exterior: Pole
Brick Ven.: 0
Stone Ven.: 0
Common Wall: Detache
Foundation: 18 Inch
Finished ?:
Auto. Doors: 0
Mech. Doors: 0
Area: 1688
% Good: 0
Storage Area: 0
No Conc. Floor: 1688

Bsmnt Garage:

Carport Area: 225
Roof: Comp.Shingle

Cost Est. for Res. Bldg: 1 Single Family PLAIN Cls D Blt 1986
(11) Heating System: Forced Air w/ Ducts
Ground Area = 1590 SF Floor Area = 1590 SF.
Phy/Ab.Phy/Func/Econ/Comb. % Good=47/100/100/100/47

Building Areas

Stories	Exterior	Foundation	Size	Cost New	Depr. Cost
1 Story	Siding	Basement	1,500		
1 Story	Siding	Slab	90		
			Total:	178,212	83,759
Other Additions/Adjustments					
Water/Sewer					
1000 Gal Septic			1	4,293	2,018
Water Well, 100 Feet			1	5,545	2,606
Porches					
WPP			36	1,512	711
WGEP (1 Story)			564	30,823	14,487
Deck					
Treated Wood			144	3,217	1,512
Garages					
Class: D Exterior: Pole (Unfinished)					
Base Cost			1688	32,460	15,256
No Concrete Floor			1688	-9,470	-4,451
Class: D Exterior: Pole (Unfinished)					
Base Cost			2113	40,633	19,098
No Concrete Floor			2113	-11,854	-5,571
Carports					
Comp.Shingle			225	3,103	1,458
Local Cost Items					
WOOD LEAN TO DIRT			1432	6,158	2,586 *4
			Totals:	284,632	133,469

<<<<< Calculations too long. See Valuation printout for complete pricing. >>>>>

*** Information herein deemed reliable but not guaranteed***

Parcel Number: 2410-04-2202, Residential Building 1 Printed on 02/15/2024

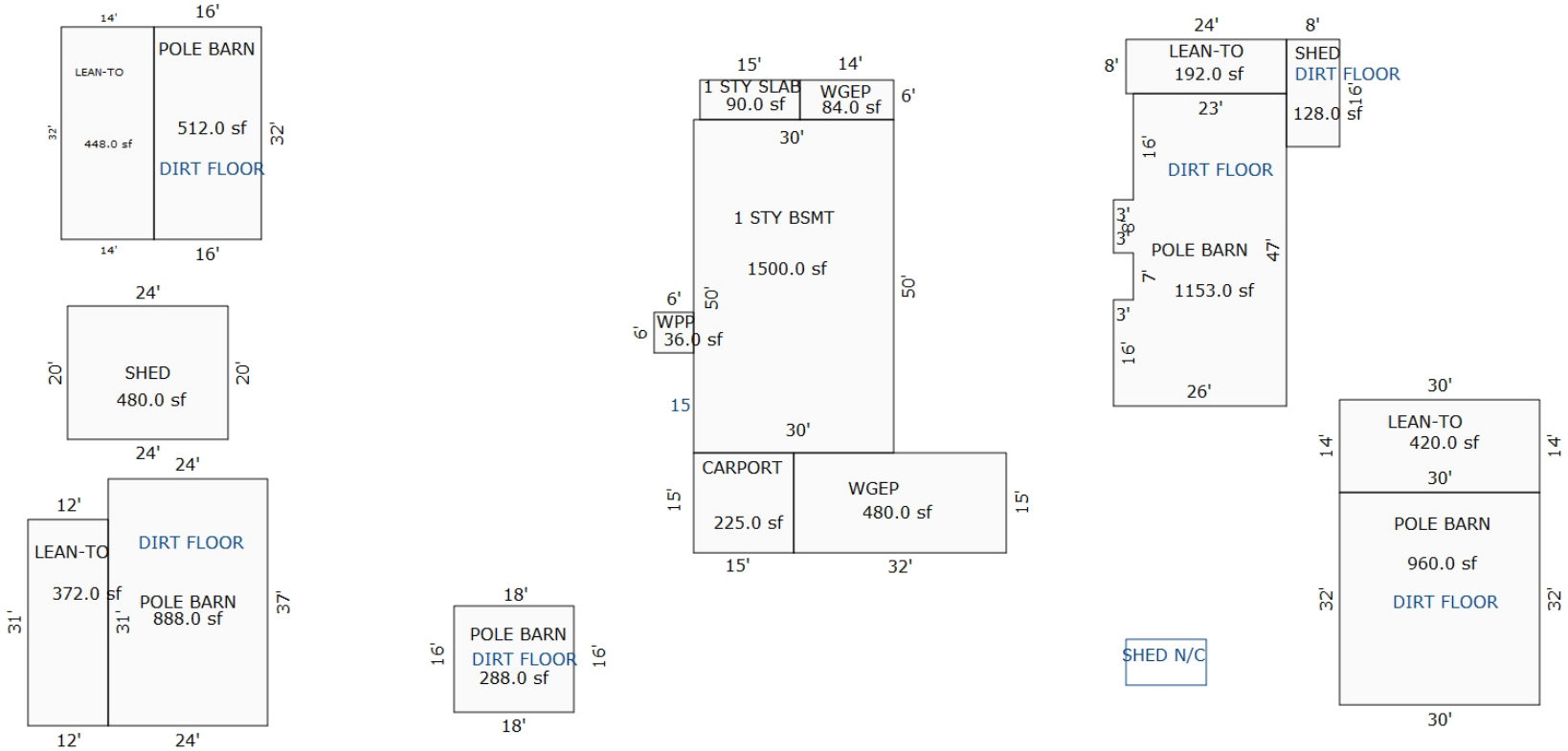

Sketch by Apex Sketch

*** Information herein deemed reliable but not guaranteed***

Parcel Number: 2410-04-2301-01 Jurisdiction: GREENWOOD TWP County: WEXFORD Printed on 02/15/2024

Grantor	Grantee	Sale Price	Sale Date	Inst. Type	Terms of Sale	Liber & Page	Verified By	Prcnt. Trans.
BLACKMER, ANDREW & KARLA		60,000	09/29/2021	WD	03-ARM'S LENGTH	691/591	DEED	0.0

Property Address

2047 E 2 1/2 RD

Owner's Name/Address

BLACKMER, ANDREW & KARLA
2047 E 2 1/2 RD
KINGSLEY MI 49649

Tax Description

PAR A; PT OF NW 1/4 OF SD SEC DESC AS BEG AT W 1/4 COR OF SD SEC; N 2117.85 FT; E 825.18 FT; S 792.66 FT; E 293.08 FT; S 1320.61 FT ; W 1113.14 FT TO POB. SUB TO EASMT. 48.86 AC M/L ---GW SEC 4 R24N R10W KINGSLEY
SPLIT ON 10/07/2021 FROM 2410.04-2101-04 AND 2410-04-2301

Comments/Influences

Default Comments

The Equalizer. Copyright (c) 1999 - 2009. Licensed To: Township of Greenwood, County of Wexford, Michigan

Class: RESIDENTIAL-IMPROV Zoning:

School: KINGSLEY AREA SCHOOL

P.R.E. 100% 01/06/2022

:

2024 Est TCV 806,819 TCV/TFA: 288.56

Building Permit(s)	Date	Number	Status

X Improved | Vacant

Public Improvements

- Dirt Road
- Gravel Road
- Paved Road
- Storm Sewer
- Sidewalk
- Water
- Sewer
- Electric
- Gas
- Curb
- Street Lights
- Standard Utilities
- Underground Utils.

Topography of Site

- Level
- Rolling
- Low
- High
- Landscaped
- Swamp
- Wooded
- Pond
- Waterfront
- Ravine
- Wetland
- Flood Plain

Who	When	What
GLA	05/13/2021	INSPECTION

Land Value Estimates for Land Table 4010.LAND VALUES

Description	Frontage	Depth	* Factors * Front	Depth	Rate	%Adj.	Reason	Value
ACREAGE			48.860 Acres		2,722	100		132,997
			48.86 Total Acres		Total Est. Land Value =			132,997

Land Improvement Cost Estimates

Description	Rate	Size	% Good	Cash Value
D/W/P: 4in Concrete	6.11	12100	52	38,444
Wood Frame	21.02	160	42	1,412
Wood Frame	18.03	400	93	6,707
Total Estimated Land Improvements True Cash Value =				46,563

Year	Land Value	Building Value	Assessed Value	Board of Review	Tribunal/ Other	Taxable Value
2024	66,500	336,900	403,400			191,045C
2023	68,800	277,700	346,500			181,948C
2022	42,000	235,700	277,700			173,284C
2021	0	0	0			0

*** Information herein deemed reliable but not guaranteed***

Building Type

X	Single Family
	Mobile Home
	Town Home
	Duplex
	A-Frame
X	Wood Frame

Building Style: PLAIN

Yr Built	Remodeled
2002	0

Condition: Average

Room List

	Basement
	1st Floor
	2nd Floor
	Bedrooms

(1) Exterior

X	Wood/Shingle
	Aluminum/Vinyl
	Brick
	Insulation

(2) Windows

X	Many		Large
	Avg.	X	Avg.
	Few		Small

	Wood Sash
	Metal Sash
	Vinyl Sash
	Double Hung
	Horiz. Slide
	Casement
	Double Glass
	Patio Doors
	Storms & Screens

(3) Roof

X	Gable		Gambrel
	Hip		Mansard
	Flat		Shed
X	Asphalt Shingle		

Chimney: Brick

(3) Roof (cont.)

	Eavestrough
	Insulation
0	Front Overhang
0	Other Overhang

(4) Interior

	Drywall		Plaster
	Paneled		Wood T&G

Trim & Decoration

	Ex	X	Ord		Min

Size of Closets

	Lg	X	Ord		Small

Doors:		Solid	X	H.C.	

(5) Floors

Kitchen:
Other:
Other:

(6) Ceilings

(7) Excavation

Basement: 2166 S.F.
Crawl: 0 S.F.
Slab: 0 S.F.
Height to Joists: 0.0

(8) Basement

	Conc. Block
	Poured Conc.
	Stone
	Treated Wood
	Concrete Floor

(9) Basement Finish

	Recreation SF
	Living SF
	Walkout Doors (B)
	No Floor SF
	Walkout Doors (A)

(10) Floor Support

Joists:
Unsupported Len:
Cntr.Sup:

(11) Heating/Cooling

X	Gas		Oil		Elec.
	Wood		Coal		Steam

	Forced Air w/o Ducts
	Forced Air w/ Ducts
	Forced Hot Water
	Electric Baseboard
	Elec. Ceil. Radiant
	Radiant (in-floor)
	Electric Wall Heat
	Space Heater
	Wall/Floor Furnace
X	Forced Heat & Cool
	Heat Pump
	No Heating/Cooling
	Central Air
	Wood Furnace

(12) Electric

0	Amps Service

No./Qual. of Fixtures

	Ex.	X	Ord.		Min

No. of Elec. Outlets

	Many	X	Ave.		Few

(13) Plumbing

2	Average Fixture(s)
	3 Fixture Bath
	2 Fixture Bath
	Softener, Auto
	Softener, Manual
	Solar Water Heat
	No Plumbing
	Extra Toilet
	Extra Sink
	Separate Shower
	Ceramic Tile Floor
	Ceramic Tile Wains
	Ceramic Tub Alcove
	Vent Fan

(14) Water/Sewer

	Public Water
	Public Sewer
1	Water Well
1	1000 Gal Septic
	2000 Gal Septic

Lump Sum Items:

(15) Built-ins

	Appliance Allow.
	Cook Top
	Dishwasher
	Garbage Disposal
	Bath Heater
	Vent Fan
	Hot Tub
	Unvented Hood
	Vented Hood
	Intercom
	Jacuzzi Tub
	Jacuzzi repl.Tub
	Oven
	Microwave
	Standard Range
	Self Clean Range
	Sauna
	Trash Compactor
	Central Vacuum
	Security System

(15) Fireplaces

	Interior 1 Story
	Interior 2 Story
	2nd/Same Stack
	Two Sided
	Exterior 1 Story
	Exterior 2 Story
	Prefab 1 Story
	Prefab 2 Story
	Heat Circulator
	Raised Hearth
	Wood Stove
	Direct-Vented Gas

Class: BC
Effec. Age: 21
Floor Area: 2,796
Total Base New : 612,178 E.C.F.
Total Depr Cost: 483,623 X 1.297
Estimated T.C.V: 627,259

(16) Porches/Decks

Area	Type
576	Composite
504	Composite

(17) Garage

Year Built: 2006
Car Capacity:
Class: BC
Exterior: Pole
Brick Ven.: 0
Stone Ven.: 0
Common Wall: Detache
Foundation: 18 Inch
Finished ?:
Auto. Doors: 0
Mech. Doors: 0
Area: 840
% Good: 0
Storage Area: 0
No Conc. Floor: 0

Bsmnt Garage:

Carport Area:
Roof:

Cost Est. for Res. Bldg: 1 Single Family PLAIN Cls BC Blt 2002
(11) Heating System: Forced Heat & Cool
Ground Area = 2166 SF Floor Area = 2796 SF.
Phy/Ab.Phy/Func/Econ/Comb. % Good=79/100/100/100/79
Building Areas

Stories	Exterior	Foundation	Size	Cost New	Depr. Cost
1+ Story	Siding	Basement	906		
1.5 Story	Siding	Basement	1,260		
			Total:	452,918	357,808
Other Additions/Adjustments					
Plumbing					
3 Fixture Bath			1	6,880	5,435
Water/Sewer					
1000 Gal Septic			1	5,676	4,484
Water Well, 100 Feet			1	6,289	4,968
Garages					
Class: BC Exterior: Pole (Unfinished)					
Base Cost			840	29,081	22,974
Class: BC Exterior: Siding Foundation: 42 Inch (Unfinished)					
Storage Over Garage			1152	20,851	16,472
Common Wall: 1 Wall			1	-3,139	-2,480
Base Cost			1152	53,245	42,064
Deck					
Composite w/Roof (Deck Portion)			576	9,348	7,385
Composite w/Roof (Roof portion)			576	12,154	9,602
Composite w/Roof (Deck Portion)			504	8,180	6,462
Composite w/Roof (Roof portion)			504	10,695	8,449
			Totals:	612,178	483,623

Notes:
ECF (RESIDENTIAL) 1.297 => TCV: 627,259

*** Information herein deemed reliable but not guaranteed***

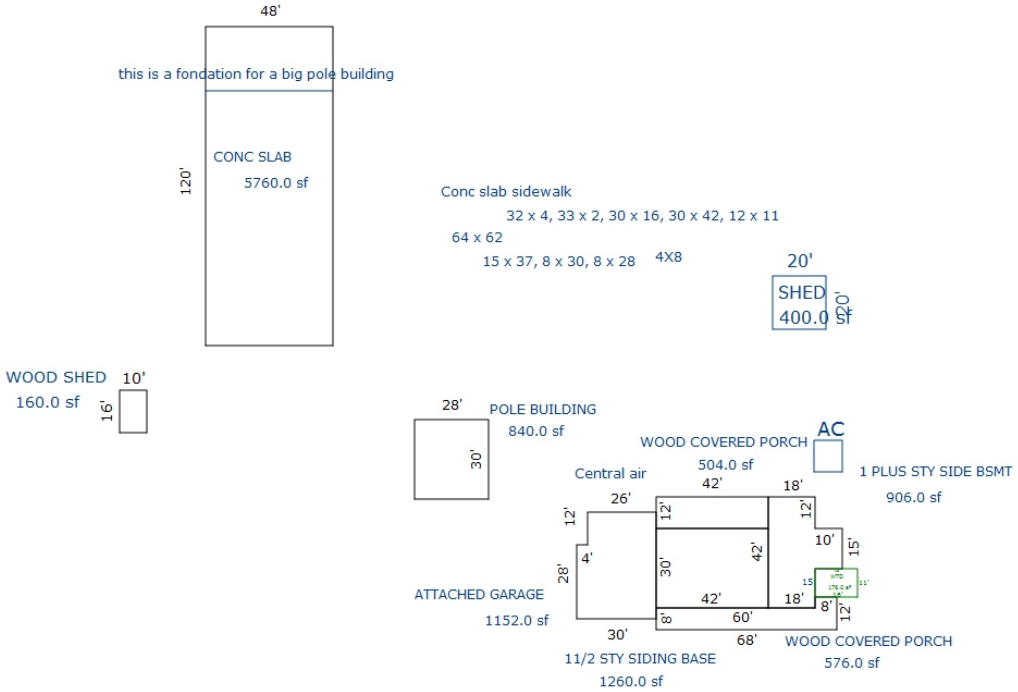

Sketch by Apex Sketch

*** Information herein deemed reliable but not guaranteed***

Parcel Number: 2410-04-2302 Jurisdiction: GREENWOOD TWP County: WEXFORD Printed on 02/15/2024

Grantor	Grantee	Sale Price	Sale Date	Inst. Type	Terms of Sale	Liber & Page	Verified By	Prcnt. Trans.
HERMAN, LEONARD & JOAN	HERMAN, DUAYNE	180,000	01/15/2005	LC	03-ARM'S LENGTH	567:2799	DEED	0.0
ARLT, DONALD & MICHELE	JLH RENTALS LLC	180,000	11/01/2004	WD	03-ARM'S LENGTH	563:2718	DEED	0.0

Property Address

2263 E 2 1/2 RD

Owner's Name/Address

HERMAN, DUAYNE A
2263 E 2 1/2 RD
KINGSLEY MI 49649

Tax Description

W 330 FT OF E 1494 FT OF S 1320 FT OF FRL NW 1/4 10 A M/L GW SEC 4 T24N R10W -KINGSLEY- [[ASSESSED W/ 04-2301 '02

Comments/Influences

Class: RESIDENTIAL-IMPROV Zoning:

School: KINGSLEY AREA SCHOOL

P.R.E. 100% 04/30/2007

:

2024 Est TCV 394,363 TCV/TFA: 234.74

Building Permit(s)	Date	Number	Status

X Improved | Vacant

	Public Improvements
	Dirt Road
X	Gravel Road
	Paved Road
	Storm Sewer
	Sidewalk
	Water
	Sewer
X	Electric
	Gas
	Curb
	Street Lights
	Standard Utilities
	Underground Utils.

	Topography of Site
	Level
X	Rolling
	Low
X	High
	Landscaped
	Swamp
	Wooded
	Pond
	Waterfront
	Ravine
	Wetland
	Flood Plain
X	OPEN

Who	When	What
GLA	10/31/2022	INSPECTION
GLA	06/11/2015	INSPECTION

Land Value Estimates for Land Table 4010.LAND VALUES

Description	Frontage	Depth	* Factors * Front	Depth	Rate	%Adj.	Reason	Value
ACREAGE			9.740 Acres		4,665	100		45,434
ROW			0.260 Acres		0	100		0
			10.00 Total Acres		Total Est. Land Value =			45,434

Land Improvement Cost Estimates

Description	Rate	Size	% Good	Cash Value
D/W/P: 4in Concrete	7.01	572	50	2,005
Total Estimated Land Improvements True Cash Value =				2,005

Year	Land Value	Building Value	Assessed Value	Board of Review	Tribunal/ Other	Taxable Value
2024	22,700	174,500	197,200			104,616C
2023	12,900	142,400	155,300			99,635C
2022	11,900	120,200	132,100			94,891C
2021	12,000	121,500	133,500			91,860C

The Equalizer. Copyright (c) 1999 - 2009. Licensed To: Township of Greenwood, County of Wexford, Michigan

*** Information herein deemed reliable but not guaranteed***

Building Type

X	Single Family
	Mobile Home
	Town Home
	Duplex
	A-Frame
X	Wood Frame

Building Style: PLAIN

Yr Built	Remodeled
1998	0

Condition: Good

Room List

	Basement
	1st Floor
	2nd Floor
	Bedrooms

(1) Exterior

	Wood/Shingle
X	Aluminum/Vinyl
	Brick
X	Insulation

(2) Windows

X	Many		Large
	Avg.	X	Avg.
	Few		Small

	Wood Sash
	Metal Sash
X	Vinyl Sash
	Double Hung
	Horiz. Slide
	Casement
	Double Glass
	Patio Doors
X	Storms & Screens

(3) Roof

X	Gable		Gambrel
	Hip		Mansard
	Flat		Shed

X	Asphalt Shingle

Chimney:

(3) Roof (cont.)

	Eavestrough
X	Insulation
0	Front Overhang
0	Other Overhang

(4) Interior

X	Drywall		Plaster
	Paneled		Wood T&G

Trim & Decoration

	Ex	X	Ord		Min

Size of Closets

	Lg	X	Ord		Small

Doors:		Solid	X	H.C.	

(5) Floors

Kitchen:
Other: Linoleum
Other: Carpeted

(6) Ceilings

X	Drywall		

(7) Excavation

Basement: 1680 S.F.
Crawl: 0 S.F.
Slab: 0 S.F.
Height to Joists: 0.0

(8) Basement

	Conc. Block
	Poured Conc.
	Stone
	Treated Wood
	Concrete Floor

(9) Basement Finish

	Recreation SF
	Living SF
	Walkout Doors (B)
	No Floor SF
	Walkout Doors (A)

(10) Floor Support

Joists:
Unsupported Len:
Cntr.Sup:

(11) Heating/Cooling

X	Gas		Oil		Elec.
	Wood		Coal		Steam

	Forced Air w/o Ducts
X	Forced Air w/ Ducts
	Forced Hot Water
	Electric Baseboard
	Elec. Ceil. Radiant
	Radiant (in-floor)
	Electric Wall Heat
	Space Heater
	Wall/Floor Furnace
	Forced Heat & Cool
	Heat Pump
	No Heating/Cooling
	Central Air
	Wood Furnace

(12) Electric

150	Amps Service

No./Qual. of Fixtures

	Ex.	X	Ord.		Min

No. of Elec. Outlets

	Many	X	Ave.		Few

(13) Plumbing

2	Average Fixture(s)
	3 Fixture Bath
	2 Fixture Bath
	Softener, Auto
	Softener, Manual
	Solar Water Heat
	No Plumbing
	Extra Toilet
	Extra Sink
	Separate Shower
	Ceramic Tile Floor
	Ceramic Tile Wains
	Ceramic Tub Alcove
	Vent Fan

(14) Water/Sewer

	Public Water
	Public Sewer
1	Water Well
1	1000 Gal Septic
	2000 Gal Septic

Lump Sum Items:

(15) Built-ins

	Appliance Allow.
	Cook Top
	Dishwasher
	Garbage Disposal
	Bath Heater
	Vent Fan
	Hot Tub
	Unvented Hood
	Vented Hood
	Intercom
	Jacuzzi Tub
	Jacuzzi repl.Tub
	Oven
	Microwave
	Standard Range
	Self Clean Range
	Sauna
	Trash Compactor
	Central Vacuum
	Security System

(15) Fireplaces

	Interior 1 Story
	Interior 2 Story
	2nd/Same Stack
	Two Sided
	Exterior 1 Story
	Exterior 2 Story
	Prefab 1 Story
	Prefab 2 Story
	Heat Circulator
	Raised Hearth
	Wood Stove
	Direct-Vented Gas

Class: C
Effec. Age: 25
Floor Area: 1,680
Total Base New : 356,760 E.C.F.
Total Depr Cost: 267,482 X 1.297
Estimated T.C.V: 346,924

(16) Porches/Decks

Area	Type
196	WCP (1 Story)
160	WPP
306	WPP

(17) Garage

Year Built:
Car Capacity:
Class: C
Exterior: Pole
Brick Ven.: 0
Stone Ven.: 0
Common Wall: Detache
Foundation: 18 Inch
Finished ?:
Auto. Doors: 0
Mech. Doors: 0
Area: 1800
% Good: 0
Storage Area: 0
No Conc. Floor: 0

Bsmnt Garage:

Carport Area:
Roof:

Cost Est. for Res. Bldg: 1 Single Family PLAIN Cls C Blt 1998
(11) Heating System: Forced Air w/ Ducts
Ground Area = 1680 SF Floor Area = 1680 SF.
Phy/Ab.Phy/Func/Econ/Comb. % Good=75/100/100/100/75
Building Areas

Stories	Exterior	Foundation	Size	Cost New	Depr. Cost	
1 Story	Siding	Basement	1,680			
			Total:	239,224	179,416	
Other Additions/Adjustments						
Plumbing						
3 Fixture Bath			1	4,678	3,508	
Water/Sewer						
1000 Gal Septic			1	4,899	3,674	
Water Well, 100 Feet			1	5,849	4,387	
Porches						
WCP (1 Story)			196	7,981	5,986	
WPP			160	4,046	3,034	
WPP			306	5,196	3,897	
Garages						
Class: C Exterior: Pole (Unfinished)						
Base Cost			776	20,805	15,604	
No Concrete Floor			776	-5,191	-3,893	
Class: C Exterior: Siding Foundation: 42 Inch (Unfinished)						
Base Cost			676	27,980	20,985	
Common Wall: 1 Wall			1	-2,705	-2,029	
Class: C Exterior: Pole (Unfinished)						
Base Cost			1800	43,740	32,805	
Local Cost Items						
WOOD LEAN TO DIRT			60	258	108	*4
			Totals:	356,760	267,482	

<<<<< Calculations too long. See Valuation printout for complete pricing. >>>>>

*** Information herein deemed reliable but not guaranteed***

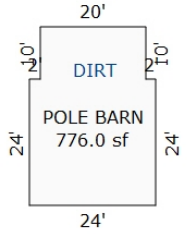

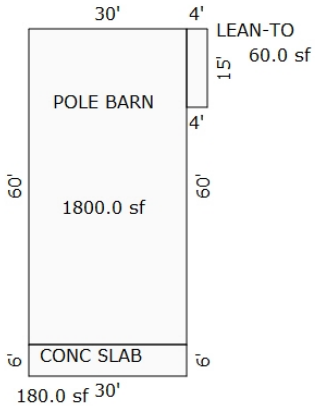

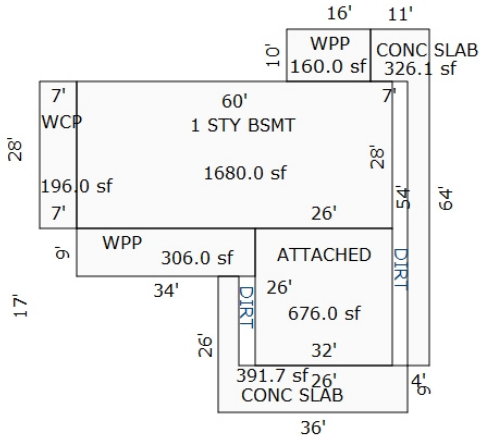

Sketch by Apex Sketch

*** Information herein deemed reliable but not guaranteed***

Parcel Number: 2410-04-2401-03 Jurisdiction: GREENWOOD TWP County: WEXFORD Printed on 02/15/2024

Grantor	Grantee	Sale Price	Sale Date	Inst. Type	Terms of Sale	Liber & Page	Verified By	Prcnt. Trans.
ARLT, JIM D	METCALF JOSH & MEGAN	0	06/02/2023	QC	21-NOT USED/OTHER	695/1464	DEED	100.0

Property Address

2345 E 2 1/2 RD

Owner's Name/Address

METCALF JOSH & MEGAN
8303 E SPARLING RD
FIFE LAKE MI 49633

Class: RESIDENTIAL-VACANT Zoning:

School: KINGSLEY AREA SCHOOL

P.R.E. 0%

:

2024 Est TCV 168,650 TCV/TFA: 75.29

Building Permit(s)	Date	Number	Status
Res. New Construction	06/28/2023	PB23-0153	COMPLETE

X Improved | Vacant

Public Improvements

- Dirt Road
- Gravel Road
- Paved Road
- Storm Sewer
- Sidewalk
- Water
- Sewer
- Electric
- Gas
- Curb
- Street Lights
- Standard Utilities
- Underground Utils.

Topography of Site

- Level
- Rolling
- Low
- High
- Landscaped
- Swamp
- Wooded
- Pond
- Waterfront
- Ravine
- Wetland
- Flood Plain

Who When What

DB 10/23/2023 INSPECTION

Land Value Estimates for Land Table 4010.LAND VALUES

Description	Frontage	Depth	* Factors * Front	Depth	Rate	%Adj.	Reason	Value
ACREAGE			5.000 Acres		5,112	100		25,560
			5.00 Total Acres			Total Est. Land Value =		25,560

Tax Description

THAT PART OF THE NORTHWEST ONE-QUARTER OF SECTION 4, TOWN 24 NORTH, RANGE 10 WEST, GREENWOOD TOWNSHIP. WEXFORD COUNTY. MICHIGAN, MORE FULLY DESCRIBED AS: COMMENCING AT THE WEST ONE-QUARTER CORNER OF SAID SECTION 4, THENCE SOUTH 89'24'42" EAST, 1443.29 FEET ALONG THE EAST-WEST ONE-QUARTER LINE OF SAID SECTION 4 TO THE POINT OF BEGINNING; THENCE NORTH 02 19' 48" EAST, 330.00 FEET; THENCE SOUTH 89 24' 42" EAST, 660.00 FEET; THENCE SOUTH 02 19' 48" WEST, 330.00 FEET TO SAID EAST-WEST ONE-QUARTER LINE; THENCE NORTH 89 24' 42" WEST, 660.00 FEET ALONG SAID EAST-WEST ONE-QUARTER LINE TO .THE POINT OF BEGINNING.
CONTAINING 5.00 ACRES, MORE OR LESS.
SUBJECT TO THE RIGHT-OF-WAY OF 2 ½ ROAD.
TOGETHER WITH AND SUBJECT TO AGREEMENTS, COVENANTS, EASEMENTS AND RESTRICTIONS OF RECORD.
BALANCE OF DESCRIPTION ON FILE

Comments/Influences

Split/Comb. on 07/10/2023 completed / / JBROWN SPLIT ;
Parent Parcel(s): 2410-04-2401-01;
Child Parcel(s): 2410-04-2401-03, 2410-04-2401-04;

The Equalizer. Copyright (c) 1999 - 2009.
Licensed To: Township of Greenwood, County of Wexford, Michigan

Year	Land Value	Building Value	Assessed Value	Board of Review	Tribunal/ Other	Taxable Value
2024	12,800	71,500	84,300			84,300S
2023	0	0	0			0
2022	0	0	0			0
2021	0	0	0			0

*** Information herein deemed reliable but not guaranteed***

Building Type

X	Single Family
	Mobile Home
	Town Home
	Duplex
	A-Frame
X	Wood Frame

Building Style: POLE BARN HOUSE

Yr Built	Remodeled
2023	0

Condition: Good
Part. Construct.: 50%

Room List

	Basement
	1st Floor
	2nd Floor
	Bedrooms

(1) Exterior

	Wood/Shingle
	Aluminum/Vinyl
	Brick
X	Metal
X	Insulation

(2) Windows

X	Many Avg. Few	X	Large Avg. Small

	Wood Sash
	Metal Sash
X	Vinyl Sash
	Double Hung
	Horiz. Slide
	Casement
	Double Glass
	Patio Doors
X	Storms & Screens

(3) Roof

X	Gable		Gambrel
	Hip		Mansard
	Flat		Shed

X	Asphalt Shingle

Chimney:

(3) Roof (cont.)

	Eavestrough
X	Insulation
0	Front Overhang
0	Other Overhang

(4) Interior

X	Drywall		Plaster
	Paneled		Wood T&G

Trim & Decoration

	Ex	X	Ord		Min

Size of Closets

	Lg	X	Ord		Small

Doors:		Solid	X	H.C.	

(5) Floors

Kitchen:
Other: Linoleum
Other: Carpeted

(6) Ceilings

X	Drywall		

(7) Excavation

Basement: 0 S.F.
Crawl: 0 S.F.
Slab: 2240 S.F.
Height to Joists: 0.0

(8) Basement

	Conc. Block
	Poured Conc.
	Stone
	Treated Wood
	Concrete Floor

(9) Basement Finish

	Recreation SF
	Living SF
	Walkout Doors (B)
	No Floor SF
	Walkout Doors (A)

(10) Floor Support

Joists:
Unsupported Len:
Cntr.Sup:

(11) Heating/Cooling

X	Gas		Oil		Elec.
	Wood		Coal		Steam

	Forced Air w/o Ducts
X	Forced Air w/ Ducts
	Forced Hot Water
	Electric Baseboard
	Elec. Ceil. Radiant
	Radiant (in-floor)
	Electric Wall Heat
	Space Heater
	Wall/Floor Furnace
	Forced Heat & Cool
	Heat Pump
	No Heating/Cooling

	Central Air
	Wood Furnace

(12) Electric

150	Amps Service

No./Qual. of Fixtures

	Ex.	X	Ord.		Min

No. of Elec. Outlets

	Many	X	Ave.		Few

(13) Plumbing

	Average Fixture(s)
2	3 Fixture Bath
	2 Fixture Bath
	Softener, Auto
	Softener, Manual
	Solar Water Heat
	No Plumbing
	Extra Toilet
	Extra Sink
	Separate Shower
	Ceramic Tile Floor
	Ceramic Tile Wains
	Ceramic Tub Alcove
	Vent Fan

(14) Water/Sewer

	Public Water
	Public Sewer
1	Water Well
	1000 Gal Septic
1	2000 Gal Septic

Lump Sum Items:

(15) Built-ins

1	Appliance Allow.
	Cook Top
	Dishwasher
	Garbage Disposal
	Bath Heater
	Vent Fan
	Hot Tub
	Unvented Hood
	Vented Hood
	Intercom
	Jacuzzi Tub
	Jacuzzi repl.Tub
	Oven
	Microwave
	Standard Range
	Self Clean Range
	Sauna
	Trash Compactor
	Central Vacuum
	Security System

(15) Fireplaces

	Interior 1 Story
	Interior 2 Story
	2nd/Same Stack
	Two Sided
	Exterior 1 Story
	Exterior 2 Story
	Prefab 1 Story
	Prefab 2 Story
	Heat Circulator
	Raised Hearth
	Wood Stove
	Direct-Vented Gas

Class: CD
Effec. Age: 1
Floor Area: 2,240
Total Base New : 305,571 E.C.F.
Total Depr Cost: 302,516 X 0.946
Estimated T.C.V: 286,180

(16) Porches/Decks

Area	Type
1104	CCP (1 Story)

(17) Garage

Year Built: 2023
Car Capacity:
Class: CD
Exterior: Siding
Brick Ven.: 0
Stone Ven.: 0
Common Wall: 1 Wall
Foundation: 42 Inch
Finished ?:
Auto. Doors: 2
Mech. Doors: 0
Area: 704
% Good: 0
Storage Area: 0
No Conc. Floor: 0

Bsmnt Garage:

Carport Area:
Roof:

Cost Est. for Res. Bldg: 1 Single Family POLE BARN HOUSE Cls CD Blt 2023
(11) Heating System: Forced Air w/ Ducts
Ground Area = 2240 SF Floor Area = 2240 SF.
Phy/Ab.Phy/Func/Econ/Comb. % Good=99/100/100/100/99
Building Areas

Stories	Exterior	Foundation	Size	Cost New	Depr. Cost
1 Story	Siding	Slab	2,240		
			Total:	229,118	226,827
Other Additions/Adjustments					
Plumbing					
3 Fixture Bath			1	3,887	3,848
Water/Sewer					
2000 Gal Septic			1	9,185	9,093
Water Well, 150 Feet			1	8,419	8,335
Garages					
Class: CD Exterior: Siding Foundation: 42 Inch (Unfinished)					
Base Cost			704	25,830	25,572
Common Wall: 1 Wall			1	-2,529	-2,504
Door Opener			2	977	967
Built-Ins					
Appliance Allow.			1	1,947	1,928
Porches					
CCP (1 Story)			1104	28,737	28,450
			Totals:	305,571	302,516

Notes:

ECF (AG) 0.946 => TCV: 286,180
50% Completed => Est. True Cash Value 2024 =

*** Information herein deemed reliable but not guaranteed***

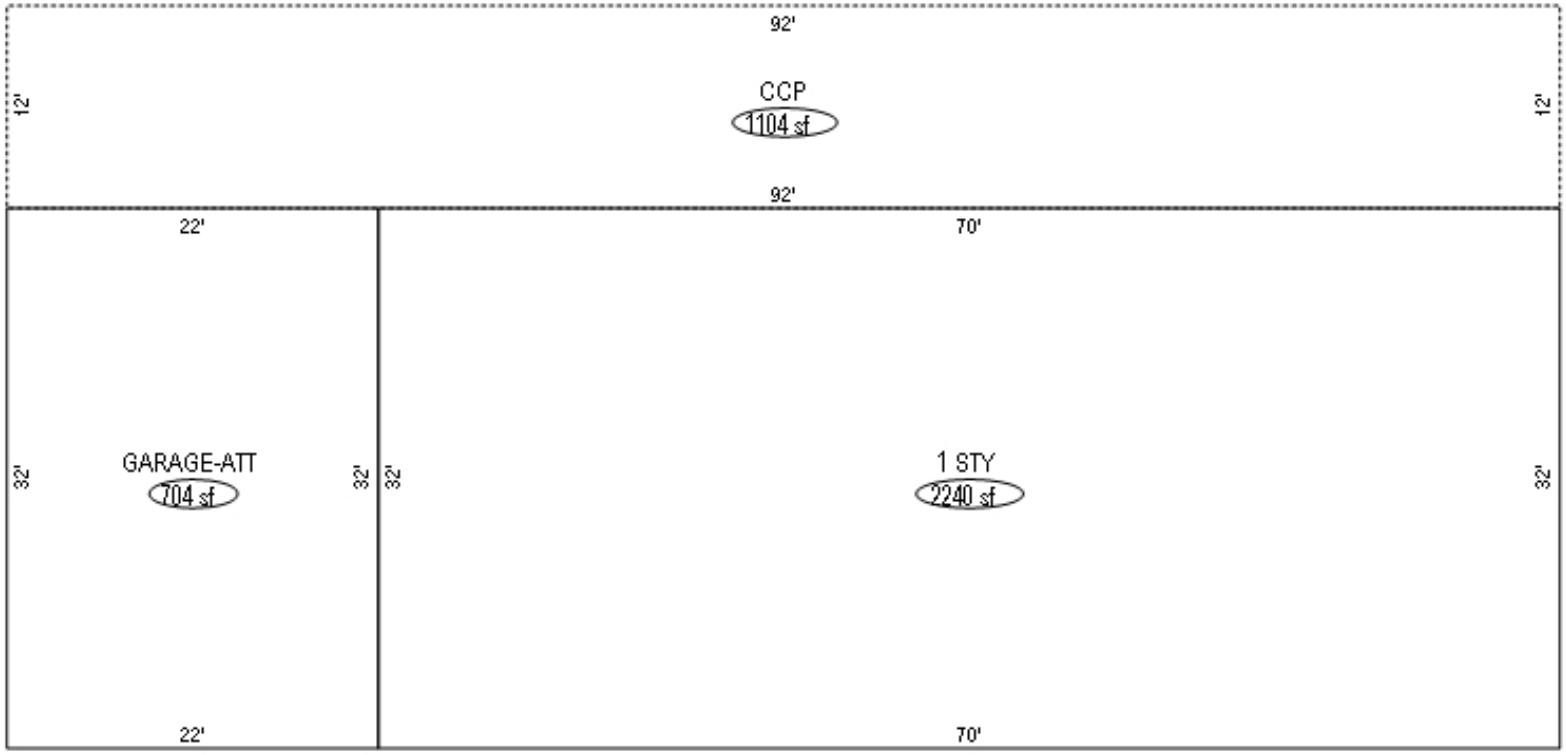

*** Information herein deemed reliable but not guaranteed***

Parcel Number: 2410-04-2401-04 Jurisdiction: GREENWOOD TWP County: WEXFORD Printed on 02/15/2024

Grantor	Grantee	Sale Price	Sale Date	Inst. Type	Terms of Sale	Liber & Page	Verified By	Prcnt. Trans.
ARLT, JIM D	ARLT JIM D & METCALF KELLY	0	06/02/2023	QC	21-NOT USED/OTHER	695/1466	DEED	0.0

Property Address

11659 N 29 1/2 RD

Owner's Name/Address

ARLT JIM D & METCALF KELLY
HULETT TOM
11659 N 29 1/2 RD
KINGSLEY MI 49649

Tax Description

THAT PART OF THE NORTHWEST ONE-QUARTER OF SECTION 4, TOWN 24 NORTH, RANGE 10 WEST, GREENWOOD TOWNSHIP, WEXFORD COUNTY, MICHIGAN, MORE FULLY DESCRIBED AS: COMMENCING AT THE WEST ONE-QUARTER CORNER OF SAID SECTION 4, THENCE SOUTH 89 24' 42" EAST, 2103.29 FEET ALONG THE EAST-WEST ONE~QUARTER LINE OF SAID SECTION 4, THENCE NORTH 02 19' 48" EAST, 330.00 FEET TO THE POINT BEGINNING, THENCE NORTH 02 19'48" EAST, 1267.77 FEET; THENCE SOUTH 83 24' 42" EAST, 1164.68 FEET TO THE NORTH-SOUTH

The Equalizer. Copyright (c) 1999 - 2009.
Licensed To: Township of Greenwood, County of Wexford, Michigan

Class: AGRICULTURAL-IMPRO Zoning:

School: KINGSLEY AREA SCHOOL

P.R.E. 100% 07/10/2023 Qual. Ag.

:

2024 Est TCV 210,127 TCV/TFA: 150.09

Building Permit(s)	Date	Number	Status

X Improved | Vacant

Public Improvements

- Dirt Road
- Gravel Road
- Paved Road
- Storm Sewer
- Sidewalk
- Water
- Sewer
- Electric
- Gas
- Curb
- Street Lights
- Standard Utilities
- Underground Utils.

Topography of Site

- Level
- Rolling
- Low
- High
- Landscaped
- Swamp
- Wooded
- Pond
- Waterfront
- Ravine
- Wetland
- Flood Plain

Who When What

Land Value Estimates for Land Table 1010.AG

Description	Frontage	Depth	* Factors * Front	Depth	Rate	%Adj.	Reason	Value
AG LAND	40 ACRES		33.88 Acres		2690	100		91,137
			33.88 Total Acres		Total Est. Land Value =			91,137

Land Improvement Cost Estimates

Description	Rate	Size	% Good	Cash Value
D/W/P: 3.5 Concrete	5.82	784	45	2,053
Wood Frame	29.11	56	45	733
Wood Frame	19.35	240	45	2,090
Total Estimated Land Improvements True Cash Value =				4,876

Year	Land Value	Building Value	Assessed Value	Board of Review	Tribunal/ Other	Taxable Value
2024	45,600	59,500	105,100			47,683C
2023	0	0	0			0
2022	0	0	0			0
2021	0	0	0			0

*** Information herein deemed reliable but not guaranteed***

Building Type

X	Single Family
	Mobile Home
	Town Home
	Duplex
	A-Frame
X	Wood Frame

Building Style: RANCH

Yr Built	Remodeled
1973	0

Condition: Fair

Room List

	Basement
	1st Floor
	2nd Floor
	Bedrooms

(1) Exterior

	Wood/Shingle
	Aluminum/Vinyl
	Brick
X	Vinyl
	Insulation

(2) Windows

X	Many		Large
	Avg.	X	Avg.
	Few		Small

X	Wood Sash
	Metal Sash
	Vinyl Sash
	Double Hung
X	Horiz. Slide
	Casement
	Double Glass
	Patio Doors
	Storms & Screens

(3) Roof

X	Gable		Gambrel
	Hip		Mansard
	Flat		Shed

X	Asphalt Shingle

Chimney: Metal

(3) Roof (cont.)

	Eavestrough
	Insulation
0	Front Overhang
0	Other Overhang

(4) Interior

	Drywall		Plaster
	Paneled		Wood T&G

Trim & Decoration

	Ex	X	Ord		Min

Size of Closets

	Lg	X	Ord		Small

Doors:		Solid	X	H.C.	

(5) Floors

Kitchen:
Other:
Other:

(6) Ceilings

(7) Excavation

Basement: 0 S.F.
Crawl: 0 S.F.
Slab: 1400 S.F.
Height to Joists: 0.0

(8) Basement

	Conc. Block
	Poured Conc.
	Stone
	Treated Wood
	Concrete Floor

(9) Basement Finish

	Recreation SF
	Living SF
	Walkout Doors (B)
	No Floor SF
	Walkout Doors (A)

(10) Floor Support

Joists:
Unsupported Len:
Cntr.Sup:

(11) Heating/Cooling

X	Gas		Oil		Elec.
	Wood		Coal		Steam

	Forced Air w/o Ducts
X	Forced Air w/ Ducts
	Forced Hot Water
	Electric Baseboard
	Elec. Ceil. Radiant
	Radiant (in-floor)
	Electric Wall Heat
	Space Heater
	Wall/Floor Furnace
	Forced Heat & Cool
	Heat Pump
	No Heating/Cooling

	Central Air
	Wood Furnace

(12) Electric

0	Amps Service

No./Qual. of Fixtures

	Ex.	X	Ord.		Min

No. of Elec. Outlets

	Many	X	Ave.		Few

(13) Plumbing

1	Average Fixture(s)
	3 Fixture Bath
	2 Fixture Bath
	Softener, Auto
	Softener, Manual
	Solar Water Heat
	No Plumbing
	Extra Toilet
	Extra Sink
	Separate Shower
	Ceramic Tile Floor
	Ceramic Tile Wains
	Ceramic Tub Alcove
	Vent Fan

(14) Water/Sewer

	Public Water
	Public Sewer
1	Water Well
1	1000 Gal Septic
	2000 Gal Septic

Lump Sum Items:

(15) Built-ins

	Appliance Allow.
	Cook Top
	Dishwasher
	Garbage Disposal
	Bath Heater
	Vent Fan
	Hot Tub
	Unvented Hood
	Vented Hood
	Intercom
	Jacuzzi Tub
	Jacuzzi repl.Tub
	Oven
	Microwave
	Standard Range
	Self Clean Range
	Sauna
	Trash Compactor
	Central Vacuum
	Security System

(15) Fireplaces

	Interior 1 Story
	Interior 2 Story
	2nd/Same Stack
	Two Sided
	Exterior 1 Story
	Exterior 2 Story
	Prefab 1 Story
	Prefab 2 Story
	Heat Circulator
	Raised Hearth
	Wood Stove
	Direct-Vented Gas

Class: CD
Effec. Age: 50
Floor Area: 1,400
Total Base New : 236,897 E.C.F.
Total Depr Cost: 120,628 X 0.946
Estimated T.C.V: 114,114

(16) Porches/Decks

Area	Type
48	WGEP (1 Story)

(17) Garage

Year Built:
Car Capacity:
Class: CD
Exterior: Pole
Brick Ven.: 0
Stone Ven.: 0
Common Wall: Detache
Foundation: 18 Inch
Finished ?:
Auto. Doors: 0
Mech. Doors: 0
Area: 896
% Good: 0
Storage Area: 0
No Conc. Floor: 0

Bsmnt Garage:

Carport Area:
Roof:

Cost Est. for Res. Bldg: 1 Single Family RANCH Cls CD Blt 1973
(11) Heating System: Forced Air w/ Ducts
Ground Area = 1400 SF Floor Area = 1400 SF.
Phy/Ab.Phy/Func/Econ/Comb. % Good=50/100/100/100/50
Building Areas

Stories	Exterior	Foundation	Size	Cost New	Depr. Cost	
1 Story	Siding	Slab	1,400			
			Total:	153,643	76,821	
Other Additions/Adjustments						
Water/Sewer						
1000 Gal Septic			1	4,582	2,291	
Water Well, 100 Feet			1	5,680	2,840	
Porches						
WGEP (1 Story)			48	5,495	2,747	
Garages						
Class: CD Exterior: Pole (Unfinished)						
Base Cost			896	20,716	10,358	
Class: CD Exterior: Pole (Unfinished)						
Base Cost			1200	26,100	13,050	
No Concrete Floor			1200	-7,380	-3,690	
Class: CD Exterior: Pole (Unfinished)						
Base Cost			1232	26,796	13,398	
No Concrete Floor			1232	-7,577	-3,789	
Local Cost Items						
WOOD LEAN TO DIRT			336	1,445	636	*4
SHED			280	2,184	961	*4
FREE STANDING ROOF			720	5,213	5,004	*9
			Totals:	236,897	120,628	

Notes:

ECF (AG) 0.946 => TCV: 114,114

*** Information herein deemed reliable but not guaranteed***

Parcel Number: 2410-04-2401-05 Jurisdiction: GREENWOOD TWP County: WEXFORD Printed on 02/15/2024

Grantor	Grantee	Sale Price	Sale Date	Inst. Type	Terms of Sale	Liber & Page	Verified By	Prcnt. Trans.
ARLT, JIM D ET AL	ARLT JIM D & METCALF KELLY	0	06/02/2023	QC	21-NOT USED/OTHER	695/1465	DEED	0.0

Property Address
2455 E 2 1/2 RD

Owner's Name/Address
ARLT JIM D & METCALF KELLY METCALF THERESA 2455 E 2 1/2 RD KINGSLEY MI 49649

Tax Description
THAT PART OF THE NORTHWEST ONE-QUARTER OF SECTION 4, TOWN 24 NORTH, RANGE 1 O WEST, GREENWOOD TOWNSHIP, WEXFORD COUNTY, MICHIGAN, MORE FULLY DESCRIBED AS: COMMENCING AT THE WEST ONE-QUARTER CORNER OF SAID SECTION 4, THENCE SOUTH 89 24' 42" EAST, 2103.29 FEET ALONG THE EAST-WEST ONE-QUARTER LINE OF SAID SECTION 4 TO THE POINT OF BEGINNING; THENCE NORTH 02 19' 48" EAST. 330.00 FEET; THENCE SOUTH 89 24' 42" EAST, 504.68 FEET TO THE NORTH-SOUTH ONE-QUARTER LINE OF SAID SECTION 4; THENCE SOUTH 02° 19'48" WEST, 330.00 FEET ALONG SAID NORTH-SOUTH ONE-QUARTER LINE TO THE EAST-WEST ONE-QUARTER LINE OF SAID SECTION 4; THENCE NORTH 89 24' 42'' WEST, 504.68 FEET ALONG SAID EAST-WEST ONE-QUARTER LINE TO THE POINT OF BEGINNING. CONTAINING 3.82 ACRES, MORE OR LESS. ***BALANCE OF DESCRIPTION ON FILE***

Comments/Influences
Split/Comb. on 07/10/2023 completed / / JBROWN SPLIT ; Parent Parcel(s): 2410-04-2401-02, 2410-04-2401-01; Child Parcel(s): 2410-04-2401-05; ----------

The Equalizer. Copyright (c) 1999 - 2009. Licensed To: Township of Greenwood, County of Wexford, Michigan

Class: RESIDENTIAL-IMPROV	Zoning:
School: KINGSLEY AREA SCHOOL	
P.R.E. 100% 07/10/2023	
:	
2024 Est TCV 131,655 TCV/TFA: 87.77	

Building Permit(s)	Date	Number	Status

X Improved | Vacant

Public Improvements
Dirt Road
Gravel Road
Paved Road
Storm Sewer
Sidewalk
Water
Sewer
Electric
Gas
Curb
Street Lights
Standard Utilities
Underground Utils.

Topography of Site
Level
Rolling
Low
High
Landscaped
Swamp
Wooded
Pond
Waterfront
Ravine
Wetland
Flood Plain

Who	When	What

Land Value Estimates for Land Table 4010.LAND VALUES

Description	Frontage	Depth	* Factors * Front	Depth	Rate	%Adj.	Reason	Value
ACREAGE			3.820	Acres	5,103	100		19,493
			3.82	Total Acres		Total Est. Land Value =		19,493

Year	Land Value	Building Value	Assessed Value	Board of Review	Tribunal/ Other	Taxable Value
2024	9,700	56,100	65,800			37,523C
2023	0	0	0			0
2022	0	0	0			0
2021	0	0	0			0

*** Information herein deemed reliable but not guaranteed***

Building Type

X	Single Family
	Mobile Home
	Town Home
	Duplex
	A-Frame
X	Wood Frame

Building Style: PLAIN

Yr Built	Remodeled
2017	0

Condition: Good

Room List

	Basement
	1st Floor
	2nd Floor
	Bedrooms

(1) Exterior

	Wood/Shingle
X	Aluminum/Vinyl
	Brick
X	Insulation

(2) Windows

	Many		Large
X	Avg.	X	Avg.
	Few		Small

	Wood Sash
	Metal Sash
X	Vinyl Sash
	Double Hung
	Horiz. Slide
	Casement
	Double Glass
	Patio Doors
X	Storms & Screens

(3) Roof

X	Gable		Gambrel
	Hip		Mansard
	Flat		Shed

X	Asphalt Shingle

Chimney:

(3) Roof (cont.)

	Eavestrough
X	Insulation
0	Front Overhang
0	Other Overhang

(4) Interior

X	Drywall		Plaster
	Paneled		Wood T&G

Trim & Decoration

	Ex	X	Ord		Min

Size of Closets

	Lg	X	Ord		Small

Doors:		Solid	X	H.C.	

(5) Floors

Kitchen:
Other: Linoleum
Other: Carpeted

(6) Ceilings

X	Drywall		

(7) Excavation

Basement: 0 S.F.
Crawl: 0 S.F.
Slab: 1500 S.F.
Height to Joists: 0.0

(8) Basement

	Conc. Block
	Poured Conc.
	Stone
	Treated Wood
	Concrete Floor

(9) Basement Finish

	Recreation SF
	Living SF
	Walkout Doors (B)
	No Floor SF
	Walkout Doors (A)

(10) Floor Support

Joists:
Unsupported Len:
Cntr.Sup:

(11) Heating/Cooling

X	Gas		Oil		Elec.
	Wood		Coal		Steam

	Forced Air w/o Ducts
X	Forced Air w/ Ducts
	Forced Hot Water
	Electric Baseboard
	Elec. Ceil. Radiant
	Radiant (in-floor)
	Electric Wall Heat
	Space Heater
	Wall/Floor Furnace
	Forced Heat & Cool
	Heat Pump
	No Heating/Cooling

	Central Air
	Wood Furnace

(12) Electric

150	Amps Service

No./Qual. of Fixtures

	Ex.	X	Ord.		Min

No. of Elec. Outlets

	Many	X	Ave.		Few

(13) Plumbing

	Average Fixture(s)
1	3 Fixture Bath
	2 Fixture Bath
	Softener, Auto
	Softener, Manual
	Solar Water Heat
	No Plumbing
	Extra Toilet
	Extra Sink
	Separate Shower
	Ceramic Tile Floor
	Ceramic Tile Wains
	Ceramic Tub Alcove
	Vent Fan

(14) Water/Sewer

	Public Water
	Public Sewer
1	Water Well
1	1000 Gal Septic
	2000 Gal Septic

Lump Sum Items:

(15) Built-ins

	Appliance Allow.
	Cook Top
	Dishwasher
	Garbage Disposal
	Bath Heater
	Vent Fan
	Hot Tub
	Unvented Hood
	Vented Hood
	Intercom
	Jacuzzi Tub
	Jacuzzi repl.Tub
	Oven
	Microwave
	Standard Range
	Self Clean Range
	Sauna
	Trash Compactor
	Central Vacuum
	Security System

(15) Fireplaces

	Interior 1 Story
	Interior 2 Story
	2nd/Same Stack
	Two Sided
	Exterior 1 Story
	Exterior 2 Story
	Prefab 1 Story
	Prefab 2 Story
	Heat Circulator
	Raised Hearth
	Wood Stove
	Direct-Vented Gas

Class: D
Effec. Age: 7
Floor Area: 1,500
Total Base New : 185,980 E.C.F.
Total Depr Cost: 86,478 X 1.297
Estimated T.C.V: 112,162

(16) Porches/Decks

Area	Type
600	CCP (1 Story)

(17) Garage

Year Built:
Car Capacity:
Class:
Exterior:
Brick Ven.:
Stone Ven.:
Common Wall:
Foundation:
Finished ?:
Auto. Doors:
Mech. Doors:
Area:
% Good:
Storage Area:
No Conc. Floor:

Bsmnt Garage:

Carport Area:
Roof:

Cost Est. for Res. Bldg: 1 Single Family PLAIN Cls D Blt 2017
(11) Heating System: Forced Air w/ Ducts
Ground Area = 1500 SF Floor Area = 1500 SF.
Phy/Ab.Phy/Func/Econ/Comb. % Good=93/50/100/100/46.5
Building Areas

Stories	Exterior	Foundation	Size	Cost New	Depr. Cost
1 Story	Siding	Slab	1,500		
			Total:	163,944	76,232
Other Additions/Adjustments					
Water/Sewer					
1000 Gal Septic			1	4,293	1,996
Water Well, 100 Feet			1	5,545	2,578
Porches					
CCP (1 Story)			600	12,198	5,672
			Totals:	185,980	86,478

Notes:

ECF (RESIDENTIAL) 1.297 => TCV: 112,162

*** Information herein deemed reliable but not guaranteed***

Parcel Number: 2410-04-3101 Jurisdiction: GREENWOOD TWP County: WEXFORD Printed on 02/15/2024

Grantor	Grantee	Sale Price	Sale Date	Inst. Type	Terms of Sale	Liber & Page	Verified By	Prcnt. Trans.
KOPKA, ROBERT A & JULIE A	PROUTY, PETER T TRUST	115,000	02/05/2019	WD	03-ARM'S LENGTH	684/791	DEED	100.0
SEBRING, RANDY A & ALICE M	KOPKA, ROBERT A & JULIE A	94,000	12/05/2011	WD	03-ARM'S LENGTH	644/113	DEED	100.0
CROSS, WARREN A.	SEBRING, RANDY & ALICE	60,000	03/21/2005	WD	03-ARM'S LENGTH	569:2305	DEED	0.0
ROBINSON, ROY E.	CROSS, WARREN A.	10,000	04/26/1988	WD	03-ARM'S LENGTH	310:801	DEED	0.0

Property Address

2094 E 2 1/2 RD

Owner's Name/Address

PROUTY, PETER T TRUST
2277 JORAE DR
TRAVERSE CITY MI 49696

Tax Description

NW 1/4 OF SW 1/4 40 A. GW. SEC. 4 T24N R10W -KINGSLEY-

Comments/Influences

The Equalizer. Copyright (c) 1999 - 2009. Licensed To: Township of Greenwood, County of Wexford, Michigan

Class: RESIDENTIAL-IMPROV Zoning:

School: KINGSLEY AREA SCHOOL

P.R.E. 0%

:

2024 Est TCV 242,107 TCV/TFA: 411.75

Building Permit(s)	Date	Number	Status
Pole Barn	06/01/2022	PB22-0128	ENTERED
OTHER	05/26/2020	PB20-0041	COMPLETE

X	Improved		Vacant

	Public Improvements
	Dirt Road
X	Gravel Road
	Paved Road
	Storm Sewer
	Sidewalk
	Water
	Sewer
X	Electric
	Gas
	Curb
	Street Lights
	Standard Utilities
	Underground Utils.

	Topography of Site
X	Level
X	Rolling
X	Low
	High
	Landscaped
X	Swamp
X	Wooded
	Pond
	Waterfront
	Ravine
	Wetland
	Flood Plain
X	OPEN

Who	When	What
GLA	10/31/2022	INSPECTION
GLA	06/11/2015	INSPECTION

Land Value Estimates for Land Table 4010.LAND VALUES

Description	Frontage	Depth	* Factors * Front	Depth	Rate	%Adj.	Reason	Value
HELSEL RIV LOW	1309.60	1309.13	1.0000	0.0000	315	100*		0
ACREAGE			38.350 Acres		2,722	100		104,389
ROW			0.990 Acres		0	100		0

* denotes lines that do not contribute to the total acreage calculation.

1310 Actual Front Feet, 39.34 Total Acres Total Est. Land Value = 104,389

Year	Land Value	Building Value	Assessed Value	Board of Review	Tribunal/ Other	Taxable Value
2024	52,200	68,900	121,100			89,435C
2023	46,300	56,100	102,400			85,177C
2022	36,900	34,700	71,600	71,600M		68,074C
2021	32,800	44,500	77,300	65,900M		65,900S

*** Information herein deemed reliable but not guaranteed***

Building Type

	Single Family
	Mobile Home
	Town Home
	Duplex
	A-Frame
X	Wood Frame

Building Style: PLAIN

Yr Built	Remodeled
2020	0

Condition: Good

Room List

	Basement
	1st Floor
	2nd Floor
	Bedrooms

(1) Exterior

	Wood/Shingle
X	Aluminum/Vinyl
	Brick
X	Insulation

(2) Windows

	Many		Large
X	Avg.	X	Avg.
	Few		Small

	Wood Sash
	Metal Sash
X	Vinyl Sash
	Double Hung
	Horiz. Slide
	Casement
	Double Glass
	Patio Doors
X	Storms & Screens

(3) Roof

X	Gable		Gambrel
	Hip		Mansard
	Flat		Shed

X	Asphalt Shingle

Chimney:

(3) Roof (cont.)

	Eavestrough
X	Insulation
0	Front Overhang
0	Other Overhang

(4) Interior

X	Drywall		Plaster
	Paneled		Wood T&G

Trim & Decoration

	Ex	X	Ord		Min

Size of Closets

	Lg	X	Ord		Small

Doors:		Solid	X	H.C.	

(5) Floors

Kitchen:
Other: Linoleum
Other: Carpeted

(6) Ceilings

X	Drywall
X	Vaulted

(7) Excavation

Basement: 0 S.F.
Crawl: 0 S.F.
Slab: 300 S.F.
Height to Joists: 0.0

(8) Basement

	Conc. Block
	Poured Conc.
	Stone
	Treated Wood
	Concrete Floor

(9) Basement Finish

	Recreation SF
	Living SF
	Walkout Doors (B)
	No Floor SF
	Walkout Doors (A)

(10) Floor Support

Joists:
Unsupported Len:
Cntr.Sup:

(11) Heating/Cooling

X	Gas		Oil		Elec.
	Wood		Coal		Steam

	Forced Air w/o Ducts
	Forced Air w/ Ducts
	Forced Hot Water
	Electric Baseboard
	Elec. Ceil. Radiant
	Radiant (in-floor)
	Electric Wall Heat
	Space Heater
	Wall/Floor Furnace
	Forced Heat & Cool
	Heat Pump
X	No Heating/Cooling

	Central Air
	Wood Furnace

(12) Electric

150	Amps Service

No./Qual. of Fixtures

	Ex.	X	Ord.		Min

No. of Elec. Outlets

	Many	X	Ave.		Few

(13) Plumbing

	Average Fixture(s)
1	3 Fixture Bath
	2 Fixture Bath
	Softener, Auto
	Softener, Manual
	Solar Water Heat
	No Plumbing
	Extra Toilet
	Extra Sink
	Separate Shower
	Ceramic Tile Floor
	Ceramic Tile Wains
	Ceramic Tub Alcove
	Vent Fan

(14) Water/Sewer

	Public Water
	Public Sewer
	Water Well
1	1000 Gal Septic
	2000 Gal Septic

Lump Sum Items:

(15) Built-ins

	Appliance Allow.
	Cook Top
	Dishwasher
	Garbage Disposal
	Bath Heater
	Vent Fan
	Hot Tub
	Unvented Hood
	Vented Hood
	Intercom
	Jacuzzi Tub
	Jacuzzi repl.Tub
	Oven
	Microwave
	Standard Range
	Self Clean Range
	Sauna
	Trash Compactor
	Central Vacuum
	Security System

(15) Fireplaces

	Interior 1 Story
	Interior 2 Story
	2nd/Same Stack
	Two Sided
	Exterior 1 Story
	Exterior 2 Story
	Prefab 1 Story
	Prefab 2 Story
	Heat Circulator
	Raised Hearth
	Wood Stove
	Direct-Vented Gas

Class: D
Effec. Age: 4
Floor Area: 288
Total Base New : 73,871 E.C.F.
Total Depr Cost: 69,911 X 1.297
Estimated T.C.V: 90,675

(16) Porches/Decks

Area	Type
144	WPP
216	WGEP (1 Story)

(17) Garage

Year Built:
Car Capacity:
Class: CD
Exterior: Pole
Brick Ven.: 0
Stone Ven.: 0
Common Wall: Detache
Foundation: 18 Inch
Finished ?:
Auto. Doors: 0
Mech. Doors: 0
Area: 1280
% Good: 0
Storage Area: 0
No Conc. Floor: 0

Bsmnt Garage:

Carport Area:
Roof:

Cost Est. for Res. Bldg: 1 Recreation Cabin PLAIN Cls D Blt 2020
(11) Heating System: No Heating/Cooling
Ground Area = 288 SF Floor Area = 288 SF.
Phy/Ab.Phy/Func/Econ/Comb. % Good=96/100/100/100/96
Building Areas

Description	Size	Cost New	Depr. Cost	
Other Additions/Adjustments				
Water/Sewer				
1000 Gal Septic	1	4,293	4,121	
Porches				
WPP	144	3,018	2,897	
WGEP (1 Story)	216	13,409	12,873	
Garages				
Class: CD Exterior: Pole (Unfinished)				
Base Cost	1280	27,840	26,726	
Local Cost Items				
POLE LEANTO DIRT	400	1,480	1,436	*9
WOOD LEAN TO DIRT	230	989	465	*4
SHED	140	1,092	513	*4
	Totals:	73,871	69,911	

Notes:
ECF (RESIDENTIAL) 1.297 => TCV: 90,675

*** Information herein deemed reliable but not guaranteed***

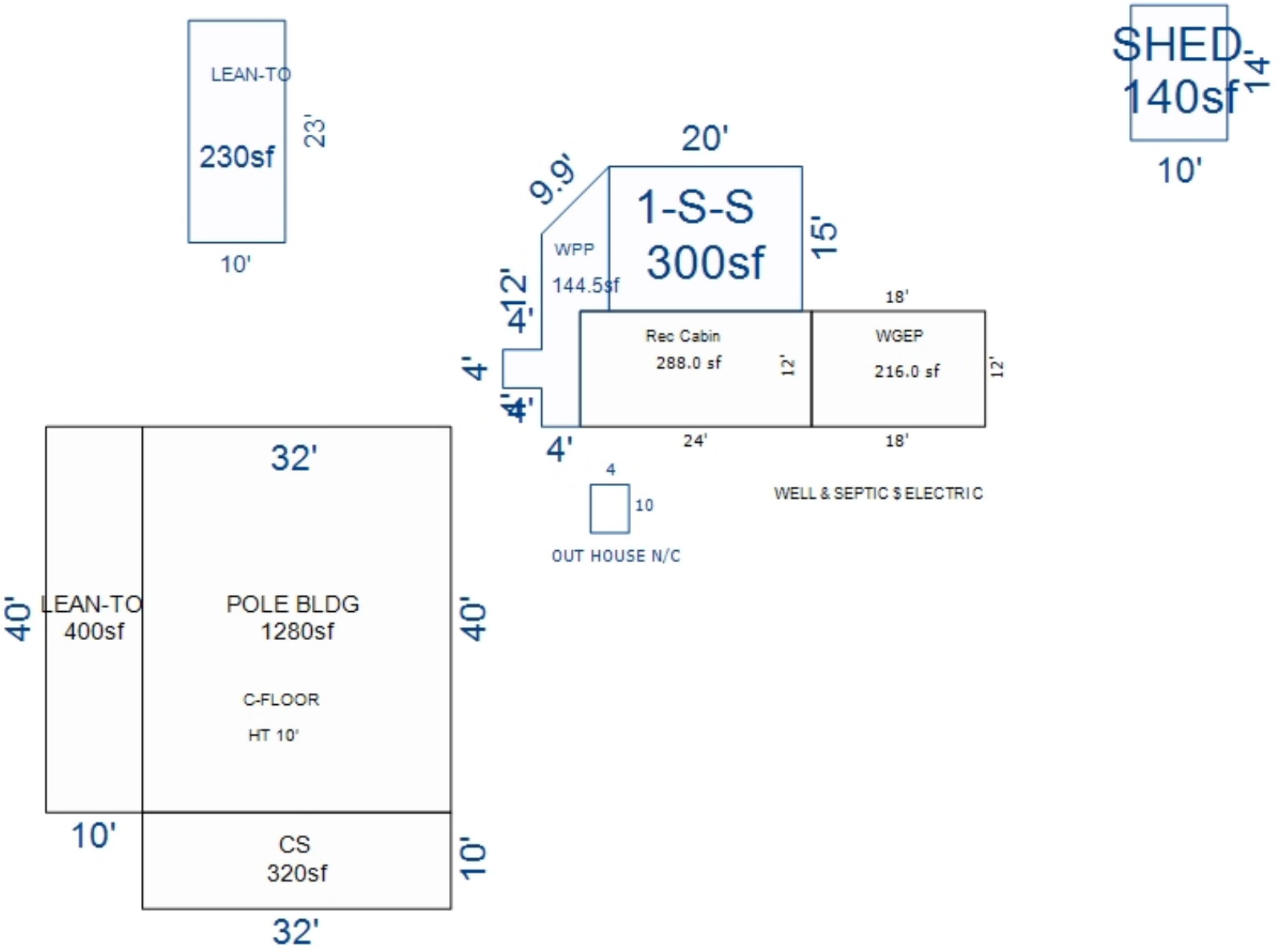

*** Information herein deemed reliable but not guaranteed***

Building Type

X	Single Family
	Mobile Home
	Town Home
	Duplex
	A-Frame
X	Wood Frame

Building Style: PLAIN

Yr Built	Remodeled
0	0

Condition: Good

Room List

	Basement
	1st Floor
	2nd Floor
	Bedrooms

(1) Exterior

	Wood/Shingle
X	Aluminum/Vinyl
	Brick
X	Insulation

(2) Windows

	Many		Large
X	Avg.	X	Avg.
	Few		Small

	Wood Sash
	Metal Sash
X	Vinyl Sash
	Double Hung
	Horiz. Slide
	Casement
	Double Glass
	Patio Doors
X	Storms & Screens

(3) Roof

X	Gable		Gambrel
	Hip		Mansard
	Flat		Shed

X	Asphalt Shingle

Chimney:

(3) Roof (cont.)

	Eavestrough
X	Insulation
0	Front Overhang
0	Other Overhang

(4) Interior

X	Drywall		Plaster
	Paneled		Wood T&G

Trim & Decoration

	Ex	X	Ord		Min

Size of Closets

	Lg	X	Ord		Small

Doors:		Solid	X	H.C.	

(5) Floors

Kitchen:
Other: Linoleum
Other: Carpeted

(6) Ceilings

X	Drywall		

(7) Excavation

Basement: 0 S.F.
Crawl: 0 S.F.
Slab: 300 S.F.
Height to Joists: 0.0

(8) Basement

	Conc. Block
	Poured Conc.
	Stone
	Treated Wood
	Concrete Floor

(9) Basement Finish

	Recreation SF
	Living SF
	Walkout Doors (B)
	No Floor SF
	Walkout Doors (A)

(10) Floor Support

Joists:
Unsupported Len:
Cntr.Sup:

(11) Heating/Cooling

X	Gas		Oil		Elec.
	Wood		Coal		Steam

	Forced Air w/o Ducts
	Forced Air w/ Ducts
	Forced Hot Water
	Electric Baseboard
	Elec. Ceil. Radiant
	Radiant (in-floor)
	Electric Wall Heat
	Space Heater
	Wall/Floor Furnace
	Forced Heat & Cool
	Heat Pump
X	No Heating/Cooling
	Central Air
	Wood Furnace

(12) Electric

150	Amps Service

No./Qual. of Fixtures

	Ex.	X	Ord.		Min

No. of Elec. Outlets

	Many	X	Ave.		Few

(13) Plumbing

1	Average Fixture(s)
	3 Fixture Bath
	2 Fixture Bath
	Softener, Auto
	Softener, Manual
	Solar Water Heat
	No Plumbing
	Extra Toilet
	Extra Sink
	Separate Shower
	Ceramic Tile Floor
	Ceramic Tile Wains
	Ceramic Tub Alcove
	Vent Fan

(14) Water/Sewer

	Public Water
	Public Sewer
	Water Well
	1000 Gal Septic
	2000 Gal Septic

Lump Sum Items:

(15) Built-ins

	Appliance Allow.
	Cook Top
	Dishwasher
	Garbage Disposal
	Bath Heater
	Vent Fan
	Hot Tub
	Unvented Hood
	Vented Hood
	Intercom
	Jacuzzi Tub
	Jacuzzi repl.Tub
	Oven
	Microwave
	Standard Range
	Self Clean Range
	Sauna
	Trash Compactor
	Central Vacuum
	Security System

(15) Fireplaces

	Interior 1 Story
	Interior 2 Story
	2nd/Same Stack
	Two Sided
	Exterior 1 Story
	Exterior 2 Story
	Prefab 1 Story
	Prefab 2 Story
	Heat Circulator
	Raised Hearth
	Wood Stove
	Direct-Vented Gas

Class: D
Effec. Age: 4
Floor Area: 300
Total Base New : 37,782 E.C.F.
Total Depr Cost: 36,271 X 1.297
Estimated T.C.V: 47,043

(16) Porches/Decks

Area	Type

(17) Garage

Year Built:
Car Capacity:
Class:
Exterior:
Brick Ven.:
Stone Ven.:
Common Wall:
Foundation:
Finished ?:
Auto. Doors:
Mech. Doors:
Area:
% Good:
Storage Area:
No Conc. Floor:

Bsmnt Garage:

Carport Area:
Roof:

Cost Est. for Res. Bldg: 2 Single Family PLAIN Cls D Blt 0
(11) Heating System: No Heating/Cooling
Ground Area = 300 SF Floor Area = 300 SF.
Phy/Ab.Phy/Func/Econ/Comb. % Good=96/100/100/100/96
Building Areas

Stories	Exterior	Foundation	Size	Cost New	Depr. Cost
1 Story	Siding	Slab	300		
			Total:	37,782	36,271

Other Additions/Adjustments

Totals:	37,782	36,271

Notes:

ECF (RESIDENTIAL) 1.297 => TCV: 47,043

*** Information herein deemed reliable but not guaranteed***

Parcel Number: 2410-04-3102 Jurisdiction: GREENWOOD TWP County: WEXFORD Printed on 02/15/2024

Grantor	Grantee	Sale Price	Sale Date	Inst. Type	Terms of Sale	Liber & Page	Verified By	Prcnt. Trans.

Property Address	Class: RESIDENTIAL-IMPROV	Zoning:	Building Permit(s)	Date	Number	Status
11493 N 29 1/2 RD	School: KINGSLEY AREA SCHOOL					
	P.R.E. 0%					
Owner's Name/Address	:					
ROBINSON, HAZEL L. 1418 ELIZABETH ST. MIDLAND MI 48640	2024 Est TCV 139,097 TCV/TFA: 193.19					

X Improved | Vacant

Land Value Estimates for Land Table 4010.LAND VALUES

Description	Frontage	Depth	* Factors * Front	Depth	Rate	%Adj.	Reason	Value
ACREAGE			20.110 Acres		3,187	100		64,089
ROW			1.210 Acres		0	100		0
			21.32 Total Acres		Total Est. Land Value =			64,089

Public Improvements

	Dirt Road
X	Gravel Road
X	Paved Road
	Storm Sewer
	Sidewalk
	Water
	Sewer
X	Electric
	Gas
	Curb
	Street Lights
	Standard Utilities
	Underground Utils.

Land Improvement Cost Estimates

Description	Rate	Size	% Good	Cash Value
Wood Frame	31.33	24	52	391
Wood Frame	23.57	96	52	1,177
Total Estimated Land Improvements True Cash Value =				1,568

Tax Description

PAR COM 2333.15 FT N OF S 1/4 POST: TH N 283 FT TO CENTER 1/4-POST; W 1320 FT; S 972 FT; E 660 FT; N 439 FT; E 227 FT; N 250 FT; E 433 FT TO POB. --21.32 A M/L-- GW. SEC. 4 T24N R10W -KINGSLEY-

Comments/Influences

Topography of Site

	Level
X	Rolling
X	Low
	High
	Landscaped
	Swamp
	Wooded
	Pond
	Waterfront
	Ravine
	Wetland
	Flood Plain
X	OPEN/PINES

Year	Land Value	Building Value	Assessed Value	Board of Review	Tribunal/ Other	Taxable Value
2024	32,000	37,500	69,500			29,969C
2023	26,100	30,900	57,000			28,542C
2022	22,100	26,300	48,400			27,183C
2021	20,100	26,600	46,700			26,315C

Who	When	What
GLA	10/31/2022	INSPECTION
GLA	06/11/2015	INSPECTION

The Equalizer. Copyright (c) 1999 - 2009. Licensed To: Township of Greenwood, County of Wexford, Michigan

*** Information herein deemed reliable but not guaranteed***

Building Type

X	Single Family
	Mobile Home
	Town Home
	Duplex
	A-Frame
X	Wood Frame

Building Style: PLAIN

Yr Built	Remodeled
0	0

Condition: Good

Room List

	Basement
	1st Floor
	2nd Floor
	Bedrooms

(1) Exterior

X	Wood/Shingle
	Aluminum/Vinyl
	Brick
X	Insulation

(2) Windows

X	Many		Large
	Avg.	X	Avg.
	Few		Small

	Wood Sash
	Metal Sash
X	Vinyl Sash
	Double Hung
	Horiz. Slide
	Casement
	Double Glass
	Patio Doors
X	Storms & Screens

(3) Roof

X	Gable		Gambrel
	Hip		Mansard
	Flat		Shed

X	Asphalt Shingle

Chimney:

(3) Roof (cont.)

	Eavestrough
X	Insulation
0	Front Overhang
0	Other Overhang

(4) Interior

X	Drywall		Plaster
	Paneled		Wood T&G

Trim & Decoration

	Ex	X	Ord		Min

Size of Closets

	Lg	X	Ord		Small

Doors:		Solid	X	H.C.	

(5) Floors

Kitchen:
Other: Linoleum
Other: Carpeted

(6) Ceilings

X	Drywall		

(7) Excavation

Basement: 0 S.F.
Crawl: 576 S.F.
Slab: 0 S.F.
Height to Joists: 0.0

(8) Basement

	Conc. Block
	Poured Conc.
	Stone
	Treated Wood
	Concrete Floor

(9) Basement Finish

	Recreation SF
	Living SF
	Walkout Doors (B)
	No Floor SF
	Walkout Doors (A)

(10) Floor Support

Joists:
Unsupported Len:
Cntr.Sup:

(11) Heating/Cooling

X	Gas		Oil		Elec.
	Wood		Coal		Steam

	Forced Air w/o Ducts
X	Forced Air w/ Ducts
	Forced Hot Water
	Electric Baseboard
	Elec. Ceil. Radiant
	Radiant (in-floor)
	Electric Wall Heat
	Space Heater
	Wall/Floor Furnace
	Forced Heat & Cool
	Heat Pump
	No Heating/Cooling

	Central Air
	Wood Furnace

(12) Electric

150	Amps Service

No./Qual. of Fixtures

	Ex.	X	Ord.		Min

No. of Elec. Outlets

	Many	X	Ave.		Few

(13) Plumbing

	Average Fixture(s)
1	3 Fixture Bath
	2 Fixture Bath
	Softener, Auto
	Softener, Manual
	Solar Water Heat
	No Plumbing
	Extra Toilet
	Extra Sink
	Separate Shower
	Ceramic Tile Floor
	Ceramic Tile Wains
	Ceramic Tub Alcove
	Vent Fan

(14) Water/Sewer

	Public Water
	Public Sewer
1	Water Well
1	1000 Gal Septic
	2000 Gal Septic

Lump Sum Items:

(15) Built-ins

	Appliance Allow.
	Cook Top
	Dishwasher
	Garbage Disposal
	Bath Heater
	Vent Fan
	Hot Tub
	Unvented Hood
	Vented Hood
	Intercom
	Jacuzzi Tub
	Jacuzzi repl.Tub
	Oven
	Microwave
	Standard Range
	Self Clean Range
	Sauna
	Trash Compactor
	Central Vacuum
	Security System

(15) Fireplaces

	Interior 1 Story
	Interior 2 Story
	2nd/Same Stack
	Two Sided
	Exterior 1 Story
1	Exterior 2 Story
	Prefab 1 Story
	Prefab 2 Story
	Heat Circulator
	Raised Hearth
	Wood Stove
	Direct-Vented Gas

Class: D
Effec. Age: 48
Floor Area: 720
Total Base New : 108,891 E.C.F.
Total Depr Cost: 56,623 X 1.297
Estimated T.C.V: 73,440

(16) Porches/Decks

Area	Type
32	WGEP (1 Story)
228	WCP (1 Story)
28	WCP (1 Story)

(17) Garage

Year Built:
Car Capacity:
Class:
Exterior:
Brick Ven.:
Stone Ven.:
Common Wall:
Foundation:
Finished ?:
Auto. Doors:
Mech. Doors:
Area:
% Good:
Storage Area:
No Conc. Floor:

Bsmnt Garage:

Carport Area:
Roof:

Cost Est. for Res. Bldg: 1 Single Family PLAIN Cls D Blt 0
(11) Heating System: Forced Air w/ Ducts
Ground Area = 576 SF Floor Area = 720 SF.
Phy/Ab.Phy/Func/Econ/Comb. % Good=52/100/100/100/52
Building Areas

Stories	Exterior	Foundation	Size	Cost New	Depr. Cost
1.25 Story	Siding	Crawl Space	576		
			Total:	79,727	41,458
Other Additions/Adjustments					
Water/Sewer					
1000 Gal Septic			1	4,293	2,232
Water Well, 100 Feet			1	5,545	2,883
Porches					
WGEP (1 Story)			32	4,182	2,175
WCP (1 Story)			228	7,027	3,654
WCP (1 Story)			28	1,862	968
Fireplaces					
Exterior 2 Story			1	6,255	3,253
			Totals:	108,891	56,623

Notes:
ECF (RESIDENTIAL) 1.297 => TCV: 73,440

*** Information herein deemed reliable but not guaranteed***

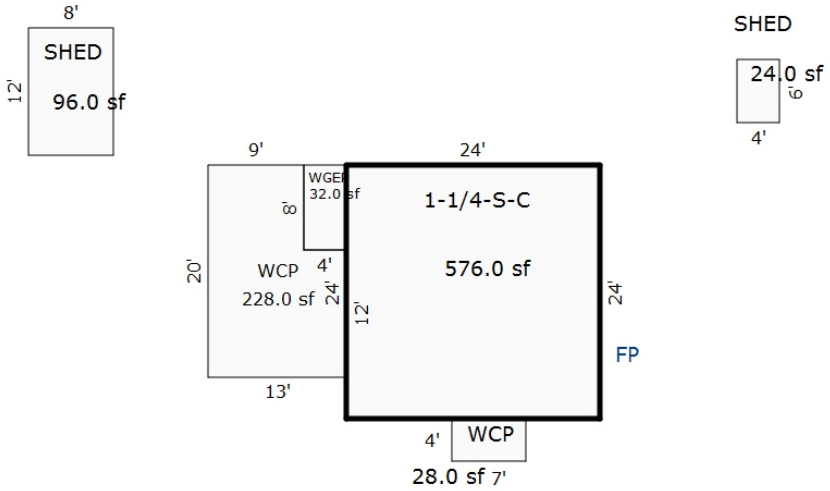

Sketch by Apex Sketch

*** Information herein deemed reliable but not guaranteed***

Parcel Number: 2410-04-3103 Jurisdiction: GREENWOOD TWP County: WEXFORD Printed on 02/15/2024

Grantor	Grantee	Sale Price	Sale Date	Inst. Type	Terms of Sale	Liber & Page	Verified By	Prcnt. Trans.
ROBINSON, MICHAEL & JAMES	ROBINSON, SUE TRUST LE	0	11/18/2016	WD	18-LIFE ESTATE	6782/795	DEED	0.0
ROBINSON, HOMER L	CERTIFICATE OF DEATH	0	08/27/2006	OTH	21-NOT USED/OTHER	649/605	DEED	0.0

Property Address

11379 N 29 1/2 RD

Owner's Name/Address

ROBINSON, MICHAEL & JAMES ROBINSON
SUE ROBINSON & MARY ULLRICH
1109 LYNN AVE
KALAMAZOO MI 49008

Tax Description

PAR COM 1448.65 FT N OF S 1/4 POST: N 884.5 FT; W 433 FT; S 250 FT; W 227 FT; S 439 FT; W 660 FT; S 324 FT; E 1167 FT; N 128.65 FT; E 153 FT TO POB. --17.52 A M/L-- GW. SEC. 4 T24N R10W -KINGSLEY-

Comments/Influences

Class: RESIDENTIAL-IMPROV Zoning:

School: KINGSLEY AREA SCHOOL

P.R.E. 0%

: 406-696-1756 CELL

2024 Est TCV 209,683 TCV/TFA: 134.41

Building Permit(s)	Date	Number	Status
	09/13/2016	PB16--0179	COMPLETE
RESIDENTIAL - REMODEL	08/01/2006	PE17597	

X	Improved		Vacant

	Public Improvements
	Dirt Road
X	Gravel Road
	Paved Road
	Storm Sewer
	Sidewalk
	Water
	Sewer
X	Electric
	Gas
	Curb
	Street Lights
	Standard Utilities
	Underground Utils.

	Topography of Site
X	Level
X	Rolling
	Low
	High
	Landscaped
	Swamp
	Wooded
	Pond
	Waterfront
	Ravine
	Wetland
	Flood Plain
X	OPEN

Who	When	What
GLA	05/13/2021	INSPECTION

Land Value Estimates for Land Table 4010.LAND VALUES

Description	Frontage	Depth	* Factors * Front	Depth	Rate	%Adj.	Reason	Value
ACREAGE			16.850 Acres		3,200	100		53,920
ROW			0.670 Acres		0	100		0
			17.52 Total Acres		Total Est. Land Value =			53,920

Land Improvement Cost Estimates

Description	Rate	Size	% Good	Cash Value
D/W/P: Asphalt Paving	2.71	900	68	1,659
D/W/P: 3.5 Concrete	5.82	60	68	237
Wood Frame	22.35	120	68	1,824
Wood Frame	22.35	120	68	1,824
Total Estimated Land Improvements True Cash Value =				5,544

Year	Land Value	Building Value	Assessed Value	Board of Review	Tribunal/ Other	Taxable Value
2024	27,000	77,800	104,800			21,001C
2023	21,900	64,300	86,200			20,001C
2022	19,000	54,700	73,700			19,049C
2021	18,700	40,500	59,200			18,441C

The Equalizer. Copyright (c) 1999 - 2009. Licensed To: Township of Greenwood, County of Wexford, Michigan

*** Information herein deemed reliable but not guaranteed***

Building Type

X	Single Family
	Mobile Home
	Town Home
	Duplex
	A-Frame
X	Wood Frame

Building Style: FARMHOUSE

Yr Built	Remodeled
0	0

Condition: Fair

Room List

	Basement
	1st Floor
	2nd Floor
	Bedrooms

(1) Exterior

X	Wood/Shingle
	Aluminum/Vinyl
	Brick
	Insulation

(2) Windows

X	Many Avg. Few	X	Large Avg. Small

Wood Sash
Metal Sash
Vinyl Sash
Double Hung
Horiz. Slide
Casement
Double Glass
Patio Doors
Storms & Screens

(3) Roof

X	Gable		Gambrel
	Hip		Mansard
	Flat		Shed
X	Asphalt Shingle		

Chimney:

(3) Roof (cont.)

	Eavestrough
	Insulation
0	Front Overhang
0	Other Overhang

(4) Interior

	Drywall		Plaster
	Paneled		Wood T&G

Trim & Decoration

	Ex		Ord		Min

Size of Closets

	Lg		Ord		Small

Doors: | | Solid | | H.C.

(5) Floors

Kitchen:
Other:
Other:

(6) Ceilings

(7) Excavation

Basement: 0 S.F.
Crawl: 1072 S.F.
Slab: 0 S.F.
Height to Joists: 0.0

(8) Basement

Conc. Block
Poured Conc.
Stone
Treated Wood
Concrete Floor

(9) Basement Finish

	Recreation SF
	Living SF
	Walkout Doors (B)
	No Floor SF
	Walkout Doors (A)

(10) Floor Support

Joists:
Unsupported Len:
Cntr.Sup:

(11) Heating/Cooling

X	Gas		Oil		Elec.
	Wood		Coal		Steam

	Forced Air w/o Ducts
X	Forced Air w/ Ducts
	Forced Hot Water
	Electric Baseboard
	Elec. Ceil. Radiant
	Radiant (in-floor)
	Electric Wall Heat
	Space Heater
	Wall/Floor Furnace
	Forced Heat & Cool
	Heat Pump
	No Heating/Cooling

	Central Air
	Wood Furnace

(12) Electric

0	Amps Service

No./Qual. of Fixtures

	Ex.		Ord.		Min

No. of Elec. Outlets

	Many		Ave.		Few

(13) Plumbing

1	Average Fixture(s)
	3 Fixture Bath
	2 Fixture Bath
	Softener, Auto
	Softener, Manual
	Solar Water Heat
	No Plumbing
	Extra Toilet
	Extra Sink
	Separate Shower
	Ceramic Tile Floor
	Ceramic Tile Wains
	Ceramic Tub Alcove
	Vent Fan

(14) Water/Sewer

	Public Water
	Public Sewer
1	Water Well
1	1000 Gal Septic
	2000 Gal Septic

Lump Sum Items:

(15) Built-ins

	Appliance Allow.
	Cook Top
	Dishwasher
	Garbage Disposal
	Bath Heater
	Vent Fan
	Hot Tub
	Unvented Hood
	Vented Hood
	Intercom
	Jacuzzi Tub
	Jacuzzi repl.Tub
	Oven
	Microwave
	Standard Range
	Self Clean Range
	Sauna
	Trash Compactor
	Central Vacuum
	Security System

(15) Fireplaces

	Interior 1 Story
	Interior 2 Story
	2nd/Same Stack
	Two Sided
	Exterior 1 Story
	Exterior 2 Story
	Prefab 1 Story
	Prefab 2 Story
	Heat Circulator
	Raised Hearth
	Wood Stove
	Direct-Vented Gas

Class: D
Effec. Age: 50
Floor Area: 1,560
Total Base New : 231,648 E.C.F.
Total Depr Cost: 115,820 X 1.297
Estimated T.C.V: 150,219

(16) Porches/Decks

Area	Type
132	CCP (1 Story)
176	WCP (1 Story)

(17) Garage

Year Built:
Car Capacity:
Class: CD
Exterior: Siding
Brick Ven.: 0
Stone Ven.: 0
Common Wall: Detache
Foundation: 18 Inch
Finished ?:
Auto. Doors: 0
Mech. Doors: 0
Area: 2052
% Good: 0
Storage Area: 0
No Conc. Floor: 0

Bsmnt Garage:

Carport Area:
Roof:

Cost Est. for Res. Bldg: 1 Single Family FARMHOUSE Cls D Blt 0
(11) Heating System: Forced Air w/ Ducts
Ground Area = 1072 SF Floor Area = 1560 SF.
Phy/Ab.Phy/Func/Econ/Comb. % Good=50/100/100/100/50
Building Areas

Stories	Exterior	Foundation	Size	Cost New	Depr. Cost
1.5 Story	Siding	Crawl Space	976		
1 Story	Siding	Crawl Space	96		
			Total:	153,218	76,607

Other Additions/Adjustments

Water/Sewer			
1000 Gal Septic	1	4,293	2,146
Water Well, 100 Feet	1	5,545	2,772
Porches			
CCP (1 Story)	132	3,060	1,530
WCP (1 Story)	176	6,003	3,001
Garages			
Class: CD Exterior: Siding Foundation: 18 Inch (Unfinished)			
Base Cost	2052	59,529	29,764
	Totals:	231,648	115,820

Notes:
ECF (RESIDENTIAL) 1.297 => TCV: 150,219

*** Information herein deemed reliable but not guaranteed***

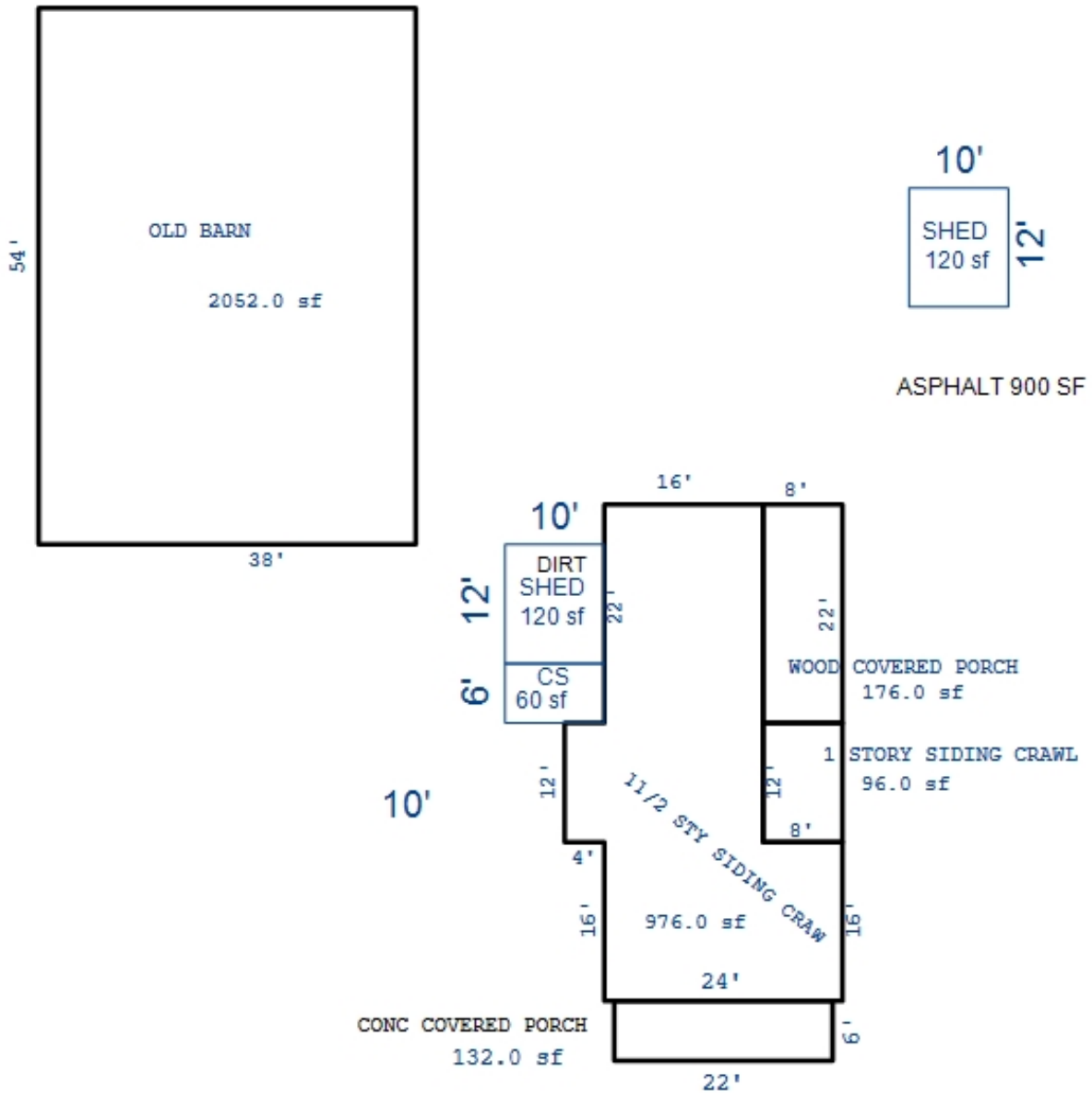

*** Information herein deemed reliable but not guaranteed***

Parcel Number: 2410-04-3104 Jurisdiction: GREENWOOD TWP County: WEXFORD Printed on 02/15/2024

Grantor	Grantee	Sale Price	Sale Date	Inst. Type	Terms of Sale	Liber & Page	Verified By	Prcnt. Trans.
MUTH, EDWARD A.	MUTH, EDWARD A & SHELLY M	0	02/02/2022	QC	18-LIFE ESTATE	692/312	DEED	0.0
ELLEFSON, VALITA & STANLEY	MUTH, EDWARD & SHELLEY	40,000	06/18/2004	WD	08-ESTATE	554:403	DEED	0.0
MUTH, VALITA V.	MUTH, EDWARD A.	40,000	04/30/1991	LC	03-ARM'S LENGTH	324:657	DEED	0.0

Property Address

11287 N 29 1/2 RD

Owner's Name/Address

MUTH, EDWARD A & SHELLY M
11201 N 29 1/2 RD
KINGSLEY MI 49649

Tax Description

PAR COM 1140.65 FT N OF S 1/4 POST: W 153 FT; N 308 FT; E 153 FT; S 308 FT TO POB. --1.08 A. M/L-- GW. SEC. 4 T24N R10W -KINGSLEY-

Comments/Influences

Class: RESIDENTIAL-IMPROV Zoning:

School: KINGSLEY AREA SCHOOL

P.R.E. 100% / /

:

2024 Est TCV 159,255 TCV/TFA: 177.74

Building Permit(s)	Date	Number	Status

X	Improved		Vacant

	Public Improvements
	Dirt Road
	Gravel Road
X	Paved Road
	Storm Sewer
	Sidewalk
	Water
	Sewer
X	Electric
	Gas
	Curb
	Street Lights
	Standard Utilities
	Underground Utils.

	Topography of Site
	Level
X	Rolling
	Low
X	High
	Landscaped
	Swamp
	Wooded
	Pond
	Waterfront
	Ravine
	Wetland
	Flood Plain
X	OPEN

Who	When	What
GLA	10/31/2022	INSPECTION
GLA	06/11/2015	INSPECTION

The Equalizer. Copyright (c) 1999 - 2009.
Licensed To: Township of Greenwood, County of Wexford, Michigan

Land Value Estimates for Land Table 4010.LAND VALUES

Description	Frontage	Depth	* Factors * Front	Depth	Rate	%Adj.	Reason	Value
ACREAGE			0.850 Acres		10,953	100		9,310
ROW			0.230 Acres		0	100		0
			1.08 Total Acres		Total Est. Land Value =			9,310

Land Improvement Cost Estimates

Description	Rate	Size	% Good	Cash Value
Fencing: Wd, Solid, 6 ft.	31.10	47	42	614
D/W/P: 4in Concrete	7.01	461	43	1,390
Wood Frame	23.69	309	42	3,074
Total Estimated Land Improvements True Cash Value =				5,078

Year	Land Value	Building Value	Assessed Value	Board of Review	Tribunal/ Other	Taxable Value
2024	4,700	74,900	79,600			29,852C
2023	2,600	61,800	64,400			28,431C
2022	2,100	52,700	54,800			27,078C
2021	2,600	53,300	55,900			26,213C

*** Information herein deemed reliable but not guaranteed***

Building Type

X	Single Family
	Mobile Home
	Town Home
	Duplex
	A-Frame
X	Wood Frame

Building Style: PLAIN

Yr Built	Remodeled
1964	1975

Condition: Good

Room List

	Basement
	1st Floor
	2nd Floor
	Bedrooms

(1) Exterior

X	Wood/Shingle
	Aluminum/Vinyl
	Brick
X	Insulation

(2) Windows

	Many		Large
X	Avg.	X	Avg.
	Few		Small

X	Wood Sash
	Metal Sash
	Vinyl Sash
	Double Hung
	Horiz. Slide
	Casement
	Double Glass
	Patio Doors
X	Storms & Screens

(3) Roof

X	Gable		Gambrel
	Hip		Mansard
	Flat		Shed

X	Asphalt Shingle

Chimney:

(3) Roof (cont.)

	Eavestrough
X	Insulation
0	Front Overhang
0	Other Overhang

(4) Interior

X	Drywall		Plaster
	Paneled		Wood T&G

Trim & Decoration

	Ex	X	Ord		Min

Size of Closets

	Lg	X	Ord		Small

Doors:		Solid	X	H.C.	

(5) Floors

Kitchen:
Other: Linoleum
Other: Carpeted

(6) Ceilings

X	Drywall

(7) Excavation

Basement: 896 S.F.
Crawl: 0 S.F.
Slab: 0 S.F.
Height to Joists: 0.0

(8) Basement

	Conc. Block
	Poured Conc.
	Stone
	Treated Wood
	Concrete Floor

(9) Basement Finish

752	Recreation	SF
	Living	SF
1	Walkout Doors (B)	
	No Floor	SF
	Walkout Doors (A)	

(10) Floor Support

Joists:
Unsupported Len:
Cntr.Sup:

(11) Heating/Cooling

X	Gas		Oil		Elec.
	Wood		Coal		Steam

	Forced Air w/o Ducts
X	Forced Air w/ Ducts
	Forced Hot Water
	Electric Baseboard
	Elec. Ceil. Radiant
	Radiant (in-floor)
	Electric Wall Heat
	Space Heater
	Wall/Floor Furnace
	Forced Heat & Cool
	Heat Pump
	No Heating/Cooling

	Central Air
	Wood Furnace

(12) Electric

150	Amps Service

No./Qual. of Fixtures

	Ex.	X	Ord.		Min

No. of Elec. Outlets

	Many	X	Ave.		Few

(13) Plumbing

	Average Fixture(s)
1	3 Fixture Bath
	2 Fixture Bath
	Softener, Auto
	Softener, Manual
	Solar Water Heat
	No Plumbing
	Extra Toilet
	Extra Sink
	Separate Shower
	Ceramic Tile Floor
	Ceramic Tile Wains
	Ceramic Tub Alcove
	Vent Fan

(14) Water/Sewer

	Public Water
	Public Sewer
1	Water Well
1	1000 Gal Septic
	2000 Gal Septic

Lump Sum Items:

(15) Built-ins

	Appliance Allow.
	Cook Top
	Dishwasher
	Garbage Disposal
	Bath Heater
	Vent Fan
	Hot Tub
	Unvented Hood
	Vented Hood
	Intercom
	Jacuzzi Tub
	Jacuzzi repl.Tub
	Oven
	Microwave
	Standard Range
	Self Clean Range
	Sauna
	Trash Compactor
	Central Vacuum
	Security System

(15) Fireplaces

	Interior 1 Story
	Interior 2 Story
	2nd/Same Stack
	Two Sided
	Exterior 1 Story
	Exterior 2 Story
	Prefab 1 Story
	Prefab 2 Story
	Heat Circulator
	Raised Hearth
	Wood Stove
	Direct-Vented Gas

Class: C
Effec. Age: 48
Floor Area: 896
Total Base New : 214,800 E.C.F.
Total Depr Cost: 111,694 X 1.297
Estimated T.C.V: 144,867

(16) Porches/Decks

Area	Type
56	WGEP (1 Story)
99	WGEP (1 Story)
156	WPP
63	Pine

(17) Garage

Year Built:
Car Capacity:
Class: C
Exterior: Pole
Brick Ven.: 0
Stone Ven.: 0
Common Wall: Detache
Foundation: 18 Inch
Finished ?:
Auto. Doors: 0
Mech. Doors: 0
Area: 1040
% Good: 0
Storage Area: 0
No Conc. Floor: 0

Bsmnt Garage:

Carport Area:
Roof:

Cost Est. for Res. Bldg: 1 Single Family PLAIN Cls C Blt 1964
(11) Heating System: Forced Air w/ Ducts
Ground Area = 896 SF Floor Area = 896 SF.
Phy/Ab.Phy/Func/Econ/Comb. % Good=52/100/100/100/52
Building Areas

Stories	Exterior	Foundation	Size	Cost New	Depr. Cost
1 Story	Siding	Basement	896		
			Total:	139,695	72,641
Other Additions/Adjustments					
Recreation Room			752	14,641	7,613
Basement, Outside Entrance, Below Grade			1	2,578	1,341
Water/Sewer					
1000 Gal Septic			1	4,899	2,547
Water Well, 100 Feet			1	5,849	3,041
Porches					
WGEP (1 Story)			56	6,586	3,425
WGEP (1 Story)			99	9,679	5,033
WPP			156	3,983	2,071
Deck					
Pine			63	1,618	841
Garages					
Class: C Exterior: Pole (Unfinished)					
Base Cost			1040	25,272	13,141
			Totals:	214,800	111,694

Notes:
ECF (RESIDENTIAL) 1.297 => TCV: 144,867

*** Information herein deemed reliable but not guaranteed***

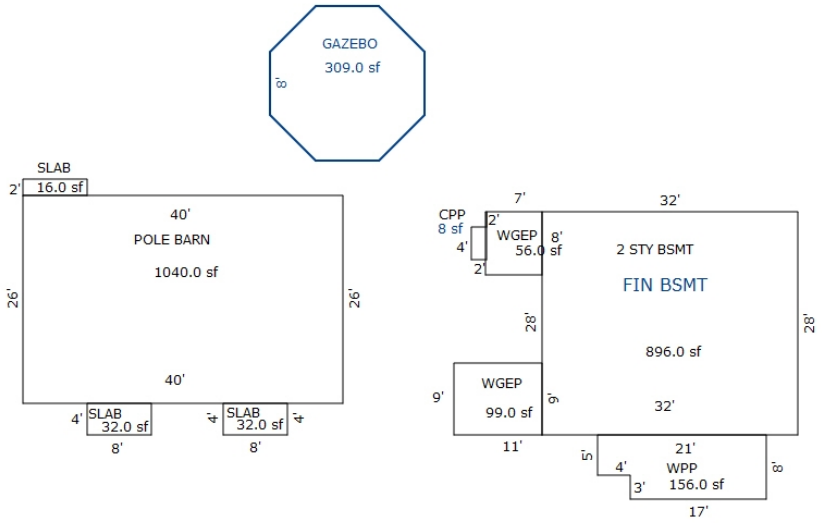

Sketch by Apex Sketch

*** Information herein deemed reliable but not guaranteed***

Parcel Number: 2410-04-3301-01 Jurisdiction: GREENWOOD TWP County: WEXFORD Printed on 02/15/2024

Grantor	Grantee	Sale Price	Sale Date	Inst. Type	Terms of Sale	Liber & Page	Verified By	Prcnt. Trans.

Property Address	Class: RESIDENTIAL-IMPROV	Zoning:	Building Permit(s)	Date	Number	Status
11031 N 29 1/2 RD	School: KINGSLEY AREA SCHOOL					
	P.R.E. 100% / /					
Owner's Name/Address	:					
VAN ALLSBURG JACALYN M 11031 N 29 1/2 RD KINGSLEY MI 49649	2024 Est TCV 611,326 TCV/TFA: 161.56					

X Improved | | Vacant

Public Improvements

- Dirt Road
- Gravel Road
- Paved Road
- Storm Sewer
- Sidewalk
- Water
- Sewer
- Electric
- Gas
- Curb
- Street Lights
- Standard Utilities
- Underground Utils.

Topography of Site

- Level
- Rolling
- Low
- High
- Landscaped
- Swamp
- Wooded
- Pond
- Waterfront
- Ravine
- Wetland
- Flood Plain

Who When What

GLA 10/31/2022 INSPECTION

Land Value Estimates for Land Table 4010.LAND VALUES

Description	Frontage	Depth	* Factors * Front	Depth	Rate	%Adj.	Reason	Value
ACREAGE			72.570 Acres		2,571	100		186,612
			72.57 Total Acres		Total Est. Land Value =			186,612

Tax Description

. SEC. 4 T24N R10W -KINGSLEY-
SPLIT 01/31/2023 FROM 2410-04-3301;
PT OF SW 1/4 DESC AS COM AT S 1/4 COR OF SD SEC; W 266.30 FT TO W LN OF SD SEC; N 1318.70 FT ; E 2464.05 FT; S 402.49 FT; W 507.39 FT; S 330.19 FT; E 660.39 FT; S 575.96 FT TO POB . --72.57 A M/L-- GW.
SEC. 4 T24N R10W -KINGSLEY-
SPLIT ON 01/31/2023 FROM 2410-04-3301;

Comments/Influences

Split/Comb. on 01/31/2023 completed 01/31/2023 LINDA ;

Year	Land Value	Building Value	Assessed Value	Board of Review	Tribunal/ Other	Taxable Value
2024	93,300	212,400	305,700			73,967C
2023	82,100	173,500	255,600	0J		0
2022	0	0	0			0
2021	0	0	0			0

The Equalizer. Copyright (c) 1999 - 2009. Licensed To: Township of Greenwood, County of Wexford, Michigan

*** Information herein deemed reliable but not guaranteed***

Building Type

X	Single Family
	Mobile Home
	Town Home
	Duplex
	A-Frame
X	Wood Frame

Building Style: TWO STORY

Yr Built	Remodeled
0	0

Condition: Good

Room List

	Basement
	1st Floor
	2nd Floor
	Bedrooms

(1) Exterior

	Wood/Shingle
X	Aluminum/Vinyl
	Brick
X	Insulation

(2) Windows

X	Many Avg. Few		Large Avg. Small

	Wood Sash
	Metal Sash
X	Vinyl Sash
	Double Hung
	Horiz. Slide
	Casement
	Double Glass
	Patio Doors
X	Storms & Screens

(3) Roof

X	Gable		Gambrel
	Hip		Mansard
	Flat		Shed

X	Asphalt Shingle

Chimney:

(3) Roof (cont.)

	Eavestrough
X	Insulation
0	Front Overhang
0	Other Overhang

(4) Interior

X	Drywall		Plaster
	Paneled		Wood T&G

Trim & Decoration

	Ex	X	Ord		Min

Size of Closets

	Lg	X	Ord		Small

Doors:		Solid	X	H.C.	

(5) Floors

Kitchen:
Other: Linoleum
Other: Carpeted

(6) Ceilings

X	Drywall		

(7) Excavation

Basement: 0 S.F.
Crawl: 256 S.F.
Slab: 1380 S.F.
Height to Joists: 0.0

(8) Basement

	Conc. Block
	Poured Conc.
	Stone
	Treated Wood
	Concrete Floor

(9) Basement Finish

1236	Recreation	SF
	Living	SF
1	Walkout Doors (B)	
	No Floor	SF
	Walkout Doors (A)	

(10) Floor Support

Joists:
Unsupported Len:
Cntr.Sup:

(11) Heating/Cooling

X	Gas		Oil		Elec.
	Wood		Coal		Steam

	Forced Air w/o Ducts
X	Forced Air w/ Ducts
	Forced Hot Water
	Electric Baseboard
	Elec. Ceil. Radiant
	Radiant (in-floor)
	Electric Wall Heat
	Space Heater
	Wall/Floor Furnace
	Forced Heat & Cool
	Heat Pump
	No Heating/Cooling

	Central Air
	Wood Furnace

(12) Electric

150	Amps Service

No./Qual. of Fixtures

	Ex.	X	Ord.		Min

No. of Elec. Outlets

	Many	X	Ave.		Few

(13) Plumbing

	Average Fixture(s)
2	3 Fixture Bath
1	2 Fixture Bath
	Softener, Auto
	Softener, Manual
	Solar Water Heat
	No Plumbing
	Extra Toilet
	Extra Sink
	Separate Shower
	Ceramic Tile Floor
	Ceramic Tile Wains
	Ceramic Tub Alcove
	Vent Fan

(14) Water/Sewer

	Public Water
	Public Sewer
1	Water Well
1	1000 Gal Septic
	2000 Gal Septic

Lump Sum Items:

(15) Built-ins

	Appliance Allow.
	Cook Top
	Dishwasher
	Garbage Disposal
	Bath Heater
	Vent Fan
	Hot Tub
	Unvented Hood
	Vented Hood
	Intercom
	Jacuzzi Tub
	Jacuzzi repl.Tub
	Oven
	Microwave
	Standard Range
	Self Clean Range
	Sauna
	Trash Compactor
	Central Vacuum
	Security System

(15) Fireplaces

	Interior 1 Story
	Interior 2 Story
	2nd/Same Stack
	Two Sided
	Exterior 1 Story
	Exterior 2 Story
	Prefab 1 Story
	Prefab 2 Story
	Heat Circulator
	Raised Hearth
	Wood Stove
	Direct-Vented Gas

Class: C
Effec. Age: 32
Floor Area: 3,784
Total Base New : 481,554 E.C.F.
Total Depr Cost: 327,459 X 1.297
Estimated T.C.V: 424,714

(16) Porches/Decks

Area	Type
340	WPP
300	WCP (1 Story)
30	CPP

(17) Garage

Year Built:
Car Capacity:
Class: C
Exterior: Siding
Brick Ven.: 0
Stone Ven.: 0
Common Wall: 1 Wall
Foundation: 42 Inch
Finished ?:
Auto. Doors: 0
Mech. Doors: 0
Area: 768
% Good: 0
Storage Area: 0
No Conc. Floor: 0

Bsmnt Garage:

Carport Area:
Roof:

Cost Est. for Res. Bldg: 1 Single Family TWO STORY Cls C Blt 0
(11) Heating System: Forced Air w/ Ducts
Ground Area = 1636 SF Floor Area = 3784 SF.
Phy/Ab.Phy/Func/Econ/Comb. % Good=68/100/100/100/68
Building Areas

Stories	Exterior	Foundation	Size	Cost New	Depr. Cost
2 Story	Siding	Slab	1,380		
1 Story	Siding	Crawl Space	256		
1 Story	Siding	Overhang	768		
			Total:	384,741	261,626

Other Additions/Adjustments			
Basement, Outside Entrance, Below Grade	1	2,578	1,753
Plumbing			
3 Fixture Bath	1	4,678	3,181
2 Fixture Bath	1	3,130	2,128
Water/Sewer			
1000 Gal Septic	1	4,899	3,331
Water Well, 100 Feet	1	5,849	3,977
Porches			
WPP	340	5,766	3,921
WCP (1 Story)	300	9,903	6,734
CPP	30	841	572
Garages			
Class: C Exterior: Siding Foundation: 42 Inch (Unfinished)			
Base Cost	768	30,520	20,754
Common Wall: 1 Wall	1	-2,705	-1,839
Class: D Exterior: Pole (Unfinished)			
Base Cost	1440	27,691	18,830
Local Cost Items			
POLE LEANTO DIRT	990	3,663	2,491

<<<<< Calculations too long. See Valuation printout for complete pricing. >>>>>

*** Information herein deemed reliable but not guaranteed***

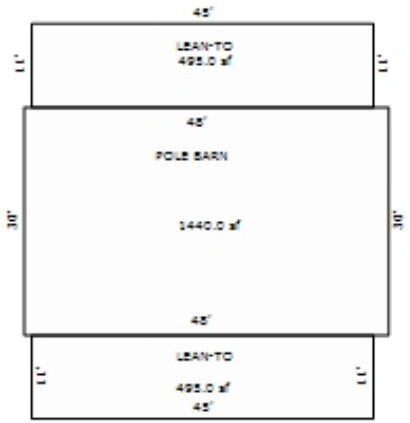

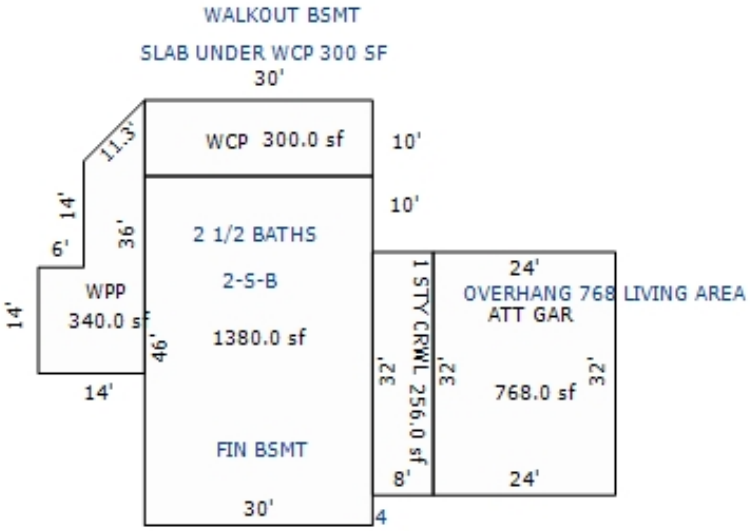

*** Information herein deemed reliable but not guaranteed***

Parcel Number: 2410-04-3301-02 Jurisdiction: GREENWOOD TWP County: WEXFORD Printed on 02/15/2024

Grantor	Grantee	Sale Price	Sale Date	Inst. Type	Terms of Sale	Liber & Page	Verified By	Prcnt. Trans.
VAN ALLSBURG, WARREN J	VANALLSBURG KEITH	0	04/14/2023	PTA	21-NOT USED/OTHER	PTA	PROPERTY TRANSFER	0.0

Property Address

11031 N 29 1/2 RD

Owner's Name/Address

VANALLSBURG KEITH
317 PINE ST
MANTON MI 49663

Tax Description

SW 1/4 OF SW 1/4 & SE 1/4 OF SW 1/4 EXC COM 906.15 FT N OF S 1/4 COR: W 153 FT; N 542.5 FT; E 153 FT; S 542.5 FT TO POB. --77.43 A M/L-- GW. SEC. 4 T24N R10W -KINGSLEY-
SPLIT/COMBINED ON 01/31/2023 FROM 2410-04-3301;
PT OF SW 1/4 DESC AS COM AT S 1/4 COR OF SD SEC; N 575.96 FT TO POB; W 660.39 FT ; N 330.19 FT E 660.30 FT S 330.19 FT TO POB 5 AC M/L -- GW. SEC. 4 T24N R10W -KINGSLEY-
SPLIT 01/31/2023 FROM 2410-04-3301;

Comments/Influences

Split/Comb. on 01/31/2023 completed 01/31/2023 LINDA ;
Parent Parcel(s): 2410-04-3301;
Child Parcel(s): 2410-04-3301-01, 2410-04-3301-02;

The Equalizer. Copyright (c) 1999 - 2009. Licensed To: Township of Greenwood, County of Wexford, Michigan

Class: RESIDENTIAL-IMPROV Zoning:
School: KINGSLEY AREA SCHOOL
P.R.E. 0%
:
2024 Est TCV 25,560

Building Permit(s)	Date	Number	Status

Improved | X | Vacant

Public Improvements

- Dirt Road
- Gravel Road
- Paved Road
- Storm Sewer
- Sidewalk
- Water
- Sewer
- Electric
- Gas
- Curb
- Street Lights
- Standard Utilities
- Underground Utils.

Topography of Site

- Level
- Rolling
- Low
- High
- Landscaped
- Swamp
- Wooded
- Pond
- Waterfront
- Ravine
- Wetland
- Flood Plain

Who When What

Land Value Estimates for Land Table 4010.LAND VALUES

Description	Frontage	Depth	* Factors * Front	Depth	Rate	%Adj.	Reason	Value
ACREAGE			5.000 Acres		5,112	100		25,560
			5.00 Total Acres			Total Est. Land Value =		25,560

Year	Land Value	Building Value	Assessed Value	Board of Review	Tribunal/ Other	Taxable Value
2024	12,800	0	12,800			1,459C
2023	10,800	0	10,800			1,390C
2022	0	0	0			0
2021	0	0	0			0

*** Information herein deemed reliable but not guaranteed***

Parcel Number: 2410-04-3402 Jurisdiction: GREENWOOD TWP County: WEXFORD Printed on 02/15/2024

Grantor	Grantee	Sale Price	Sale Date	Inst. Type	Terms of Sale	Liber & Page	Verified By	Prcnt. Trans.
BEAN, JEFFREY D		0	05/26/2022	WD	16-LC PAYOFF	693/773	DEED	0.0
STAFFORD, SCOTT A	BEAN, JEFFREY D	65,000	05/01/2015	LC	03-ARM'S LENGTH	675/2712	DEED	100.0
HOYT, RAYMOND & BERNETTA	SMITH, PENNY	59,250	02/21/2002	WD	08-ESTATE	386:477	DEED	0.0
HOYT, RAYMOND	SMITH, PENNY J.	59,250	10/13/1999	LC	03-ARM'S LENGTH	370:338	DEED	0.0

Property Address

11155 N 29 1/2 RD

Owner's Name/Address

BEAN, JEFFREY D
11155 N 29 1/2 RD
KINGSLEY MI 49649

Tax Description

PAR COM 906.15 FT N OF S 1/4 POST: W 153 FT; N 234.5 FT; E 153 FT; S 234.5 FT TO POB. --.81 A. M/L-- GW. SEC. 4 T24N R10W -KINGSLEY-

Comments/Influences

Class: RESIDENTIAL-IMPROV Zoning:

School: KINGSLEY AREA SCHOOL

P.R.E. 100% 03/20/2018

:

2024 Est TCV 164,464 TCV/TFA: 73.42

Building Permit(s)	Date	Number	Status
RESIDENTIAL - REMODEL	06/03/2002	PM5923	

X	Improved		Vacant

	Public Improvements
	Dirt Road
	Gravel Road
X	Paved Road
	Storm Sewer
	Sidewalk
	Water
	Sewer
X	Electric
	Gas
	Curb
	Street Lights
	Standard Utilities
	Underground Utils.

	Topography of Site
	Level
X	Rolling
	Low
	High
	Landscaped
	Swamp
	Wooded
	Pond
	Waterfront
	Ravine
	Wetland
	Flood Plain
X	OPEN

Who	When	What
GLA	10/31/2022	INSPECTION
GLA	06/11/2015	INSPECTION

Land Value Estimates for Land Table 4010.LAND VALUES

Description	Frontage	Depth	* Factors * Front	Depth	Rate	%Adj.	Reason	Value
ACREAGE			0.640 Acres		10,953	100		7,010
ROW			0.170 Acres		0	100		0
			0.81 Total Acres		Total Est. Land Value =			7,010

Land Improvement Cost Estimates

Description	Rate	Size	% Good	Cash Value
D/W/P: 4in Concrete	6.11	262	45	720
Wood Frame	23.02	100	40	921
Total Estimated Land Improvements True Cash Value =				1,641

Year	Land Value	Building Value	Assessed Value	Board of Review	Tribunal/ Other	Taxable Value
2024	3,500	78,700	82,200			48,534C
2023	1,900	64,700	66,600			46,223C
2022	1,600	54,900	56,500			44,022C
2021	1,900	55,800	57,700			42,616C

The Equalizer. Copyright (c) 1999 - 2009. Licensed To: Township of Greenwood, County of Wexford, Michigan

*** Information herein deemed reliable but not guaranteed***

Building Type

X	Single Family
	Mobile Home
	Town Home
	Duplex
	A-Frame
X	Wood Frame

Building Style: PLAIN

Yr Built	Remodeled
0	1975

Condition: Good

Room List

	Basement
	1st Floor
	2nd Floor
	Bedrooms

(1) Exterior

	Wood/Shingle
X	Aluminum/Vinyl
	Brick
X	Insulation

(2) Windows

X	Many Avg. Few	X	Large Avg. Small

	Wood Sash
	Metal Sash
X	Vinyl Sash
	Double Hung
	Horiz. Slide
	Casement
	Double Glass
	Patio Doors
X	Storms & Screens

(3) Roof

X	Gable		Gambrel
	Hip		Mansard
	Flat		Shed

X	Asphalt Shingle

Chimney:

(3) Roof (cont.)

	Eavestrough
X	Insulation
0	Front Overhang
0	Other Overhang

(4) Interior

X	Drywall Paneled		Plaster Wood T&G

Trim & Decoration

	Ex	X	Ord		Min

Size of Closets

	Lg	X	Ord		Small

Doors: | | Solid | X | H.C.

(5) Floors

Kitchen:
Other: Linoleum
Other: Carpeted

(6) Ceilings

X	Drywall

(7) Excavation

Basement: 816 S.F.
Crawl: 608 S.F.
Slab: 0 S.F.
Height to Joists: 0.0

(8) Basement

	Conc. Block
	Poured Conc.
	Stone
	Treated Wood
	Concrete Floor

(9) Basement Finish

	Recreation SF
	Living SF
	Walkout Doors (B)
	No Floor SF
	Walkout Doors (A)

(10) Floor Support

Joists:
Unsupported Len:
Cntr.Sup:

(11) Heating/Cooling

X	Gas		Oil		Elec.
	Wood		Coal		Steam

	Forced Air w/o Ducts
X	Forced Air w/ Ducts
	Forced Hot Water
	Electric Baseboard
	Elec. Ceil. Radiant
	Radiant (in-floor)
	Electric Wall Heat
	Space Heater
	Wall/Floor Furnace
	Forced Heat & Cool
	Heat Pump
	No Heating/Cooling

	Central Air
	Wood Furnace

(12) Electric

150	Amps Service

No./Qual. of Fixtures

	Ex.	X	Ord.		Min

No. of Elec. Outlets

	Many	X	Ave.		Few

(13) Plumbing

	Average Fixture(s)
1	3 Fixture Bath
	2 Fixture Bath
	Softener, Auto
	Softener, Manual
	Solar Water Heat
	No Plumbing
	Extra Toilet
	Extra Sink
	Separate Shower
	Ceramic Tile Floor
	Ceramic Tile Wains
	Ceramic Tub Alcove
	Vent Fan

(14) Water/Sewer

	Public Water
	Public Sewer
1	Water Well
1	1000 Gal Septic
	2000 Gal Septic

Lump Sum Items:

(15) Built-ins

	Appliance Allow.
	Cook Top
	Dishwasher
	Garbage Disposal
	Bath Heater
	Vent Fan
	Hot Tub
	Unvented Hood
	Vented Hood
	Intercom
	Jacuzzi Tub
	Jacuzzi repl.Tub
	Oven
	Microwave
	Standard Range
	Self Clean Range
	Sauna
	Trash Compactor
	Central Vacuum
	Security System

(15) Fireplaces

	Interior 1 Story
	Interior 2 Story
	2nd/Same Stack
	Two Sided
	Exterior 1 Story
	Exterior 2 Story
	Prefab 1 Story
	Prefab 2 Story
	Heat Circulator
	Raised Hearth
	Wood Stove
	Direct-Vented Gas

Class: D
Effec. Age: 48
Floor Area: 2,240
Total Base New : 231,025 E.C.F.
Total Depr Cost: 120,133 X 1.297
Estimated T.C.V: 155,813

(16) Porches/Decks

Area	Type
160	WPP
64	CCP (1 Story)
32	Treated Wood

(17) Garage

Year Built:
Car Capacity:
Class:
Exterior:
Brick Ven.:
Stone Ven.:
Common Wall:
Foundation:
Finished ?:
Auto. Doors:
Mech. Doors:
Area:
% Good:
Storage Area:
No Conc. Floor:

Bsmnt Garage:

Carport Area:
Roof:

Cost Est. for Res. Bldg: 1 Single Family PLAIN Cls D Blt 0
(11) Heating System: Forced Air w/ Ducts
Ground Area = 1424 SF Floor Area = 2240 SF.
Phy/Ab.Phy/Func/Econ/Comb. % Good=52/100/100/100/52

Building Areas

Stories	Exterior	Foundation	Size	Cost New	Depr. Cost
2 Story	Siding	Basement	816		
1 Story	Siding	Crawl Space	608		
			Total:	215,004	111,803

Other Additions/Adjustments

Water/Sewer			
1000 Gal Septic	1	4,293	2,232
Water Well, 100 Feet	1	5,545	2,883
Porches			
WPP	160	3,227	1,678
CCP (1 Story)	64	1,599	831
Deck			
Treated Wood	32	1,357	706
	Totals:	231,025	120,133

Notes:

ECF (RESIDENTIAL) 1.297 => TCV: 155,813

*** Information herein deemed reliable but not guaranteed***

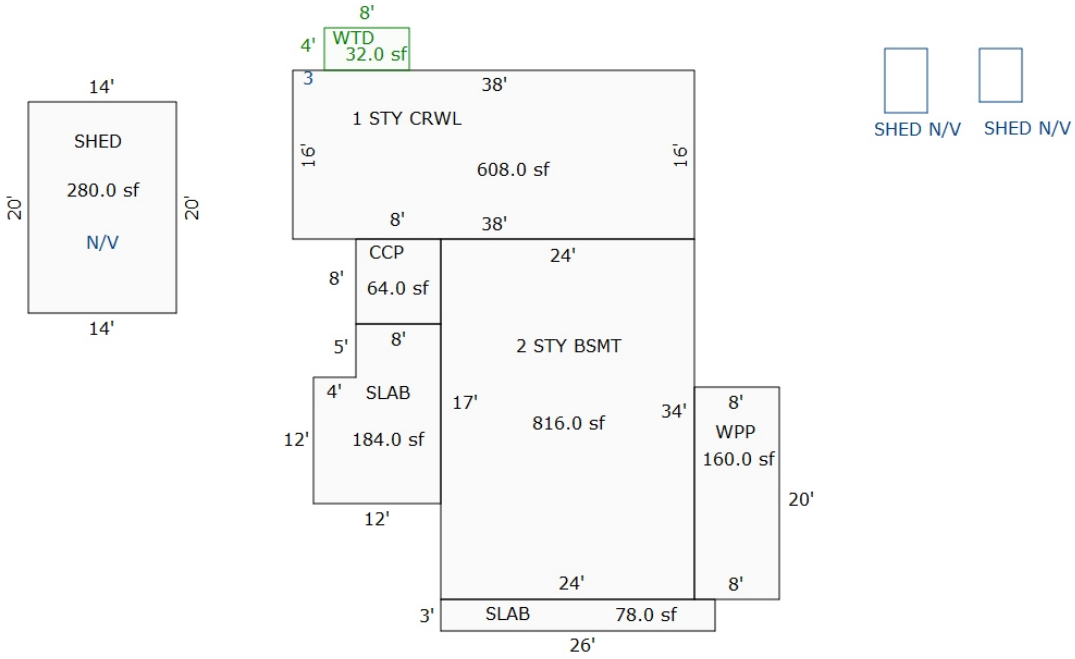

Sketch by Apex Sketch

*** Information herein deemed reliable but not guaranteed***

Parcel Number: 2410-04-4101 Jurisdiction: GREENWOOD TWP County: WEXFORD Printed on 02/15/2024

Grantor	Grantee	Sale Price	Sale Date	Inst. Type	Terms of Sale	Liber & Page	Verified By	Prcnt. Trans.
GEIGER, ANNA L TRUST*	DARLING, SUSAN M & RICHARI	0	07/30/2014	WD	09-FAMILY	670/172	DEED	0.0

Property Address
11495 N 31 RD

Owner's Name/Address
DARLING, SUSAN M & RICHARD J 11432 N 29 1/2 RD KINGSLEY MI 49649

Tax Description
N 1/2 OF SE 1/4 80 A. GW. SEC. 4 T24N R10W -KINGSLEY-

Comments/Influences

The Equalizer. Copyright (c) 1999 - 2009.
Licensed To: Township of Greenwood, County of Wexford, Michigan

Class: RESIDENTIAL-VACANT Zoning:
School: KINGSLEY AREA SCHOOL
P.R.E. 0%
:
2024 Est TCV 294,300 TCV/TFA: 540.99

Building Permit(s)	Date	Number	Status
OTHER	12/15/2022	PB22--0343	ENTERED

X Improved | Vacant

	Public Improvements
	Dirt Road
X	Gravel Road
X	Paved Road
	Storm Sewer
	Sidewalk
X	Water
X	Sewer
X	Electric
	Gas
	Curb
	Street Lights
	Standard Utilities
	Underground Utils.

	Topography of Site
X	Level
X	Rolling
X	Low
	High
	Landscaped
	Swamp
	Wooded
	Pond
	Waterfront
	Ravine
	Wetland
	Flood Plain
X	OPEN

Who	When	What
JB	10/23/2023	INSPECTION
GLA	10/31/2022	INSPECTION
GLA	06/11/2015	INSPECTION

Land Value Estimates for Land Table 4010.LAND VALUES

Description	Frontage	Depth	* Factors * Front	Depth	Rate	%Adj.	Reason	Value
	1320.00	0.00	1.0000	1.0000	0	100		0
ACREAGE			78.000 Acres		2,548	100		198,764
ROW			2.000 Acres		0	100		0
1320 Actual Front Feet, 80.00 Total Acres							Total Est. Land Value =	198,764

Year	Land Value	Building Value	Assessed Value	Board of Review	Tribunal/ Other	Taxable Value
2024	99,400	47,800	147,200			72,666C
2023	84,700	0	84,700			29,873C
2022	68,900	0	68,900			28,451C
2021	63,300	0	63,300			27,543C

*** Information herein deemed reliable but not guaranteed***

Building Type

X	Single Family
	Mobile Home
	Town Home
	Duplex
	A-Frame
X	Wood Frame

Building Style: PLAIN

Yr Built	Remodeled
2023	0

Condition: Good

Room List

	Basement
	1st Floor
	2nd Floor
	Bedrooms

(1) Exterior

X	Wood/Shingle
	Aluminum/Vinyl
	Brick
X	Insulation

(2) Windows

X	Many Avg. Few	X	Large Avg. Small

	Wood Sash
	Metal Sash
X	Vinyl Sash
	Double Hung
	Horiz. Slide
	Casement
	Double Glass
	Patio Doors
X	Storms & Screens

(3) Roof

X	Gable		Gambrel
	Hip		Mansard
	Flat		Shed

X	Asphalt Shingle

Chimney:

(3) Roof (cont.)

	Eavestrough
X	Insulation
0	Front Overhang
0	Other Overhang

(4) Interior

X	Drywall		Plaster
	Paneled		Wood T&G

Trim & Decoration

	Ex	X	Ord		Min

Size of Closets

	Lg	X	Ord		Small

Doors:		Solid	X	H.C.	

(5) Floors

Kitchen:
Other: Linoleum
Other: Carpeted

(6) Ceilings

X	Drywall

(7) Excavation

Basement: 0 S.F.
Crawl: 544 S.F.
Slab: 0 S.F.
Height to Joists: 0.0

(8) Basement

	Conc. Block
	Poured Conc.
	Stone
	Treated Wood
	Concrete Floor

(9) Basement Finish

	Recreation SF
	Living SF
	Walkout Doors (B)
	No Floor SF
	Walkout Doors (A)

(10) Floor Support

Joists:
Unsupported Len:
Cntr.Sup:

(11) Heating/Cooling

X	Gas		Oil		Elec.
	Wood		Coal		Steam

	Forced Air w/o Ducts
X	Forced Air w/ Ducts
	Forced Hot Water
	Electric Baseboard
	Elec. Ceil. Radiant
	Radiant (in-floor)
	Electric Wall Heat
	Space Heater
	Wall/Floor Furnace
	Forced Heat & Cool
	Heat Pump
	No Heating/Cooling

	Central Air
	Wood Furnace

(12) Electric

150	Amps Service

No./Qual. of Fixtures

	Ex.	X	Ord.		Min

No. of Elec. Outlets

	Many	X	Ave.		Few

(13) Plumbing

1	Average Fixture(s)
1	3 Fixture Bath
	2 Fixture Bath
	Softener, Auto
	Softener, Manual
	Solar Water Heat
	No Plumbing
	Extra Toilet
	Extra Sink
	Separate Shower
	Ceramic Tile Floor
	Ceramic Tile Wains
	Ceramic Tub Alcove
	Vent Fan

(14) Water/Sewer

	Public Water
	Public Sewer
	Water Well
1	1000 Gal Septic
	2000 Gal Septic

Lump Sum Items:

(15) Built-ins

1	Appliance Allow.
	Cook Top
	Dishwasher
	Garbage Disposal
	Bath Heater
	Vent Fan
	Hot Tub
	Unvented Hood
	Vented Hood
	Intercom
	Jacuzzi Tub
	Jacuzzi repl.Tub
	Oven
	Microwave
	Standard Range
	Self Clean Range
	Sauna
	Trash Compactor
	Central Vacuum
	Security System

(15) Fireplaces

	Interior 1 Story
	Interior 2 Story
	2nd/Same Stack
	Two Sided
	Exterior 1 Story
	Exterior 2 Story
	Prefab 1 Story
	Prefab 2 Story
	Heat Circulator
	Raised Hearth
	Wood Stove
	Direct-Vented Gas

Class: D -10
Effec. Age: 1
Floor Area: 544
Total Base New : 74,404 E.C.F.
Total Depr Cost: 73,659 X 1.297
Estimated T.C.V: 95,536

(16) Porches/Decks

Area	Type

(17) Garage

Year Built: 2023
Car Capacity:
Class: D
Exterior: Siding
Brick Ven.: 0
Stone Ven.: 0
Common Wall: Detache
Foundation: 42 Inch
Finished ?:
Auto. Doors: 1
Mech. Doors: 0
Area: 160
% Good: 0
Storage Area: 0
No Conc. Floor: 0

Bsmnt Garage:

Carport Area:
Roof:

Cost Est. for Res. Bldg: 1 Single Family PLAIN Cls D-10 Blt 2023
(11) Heating System: Forced Air w/ Ducts
Ground Area = 544 SF Floor Area = 544 SF.
Phy/Ab.Phy/Func/Econ/Comb. % Good=99/100/100/100/99
Building Areas

Stories	Exterior	Foundation	Size	Cost New	Depr. Cost
1 Story	Siding	Crawl Space	544		
			Total:	59,703	59,105
Other Additions/Adjustments					
Plumbing					
Average Fixture(s)			1	1,032	1,022
Water/Sewer					
1000 Gal Septic			1	4,293	4,250
Garages					
Class: D Exterior: Siding Foundation: 42 Inch (Unfinished)					
Door Opener			1	433	429
Base Cost			160	7,293	7,220
Built-Ins					
Appliance Allow.			1	1,650	1,633
			Totals:	74,404	73,659

Notes:
ECF (RESIDENTIAL) 1.297 => TCV: 95,536

*** Information herein deemed reliable but not guaranteed***

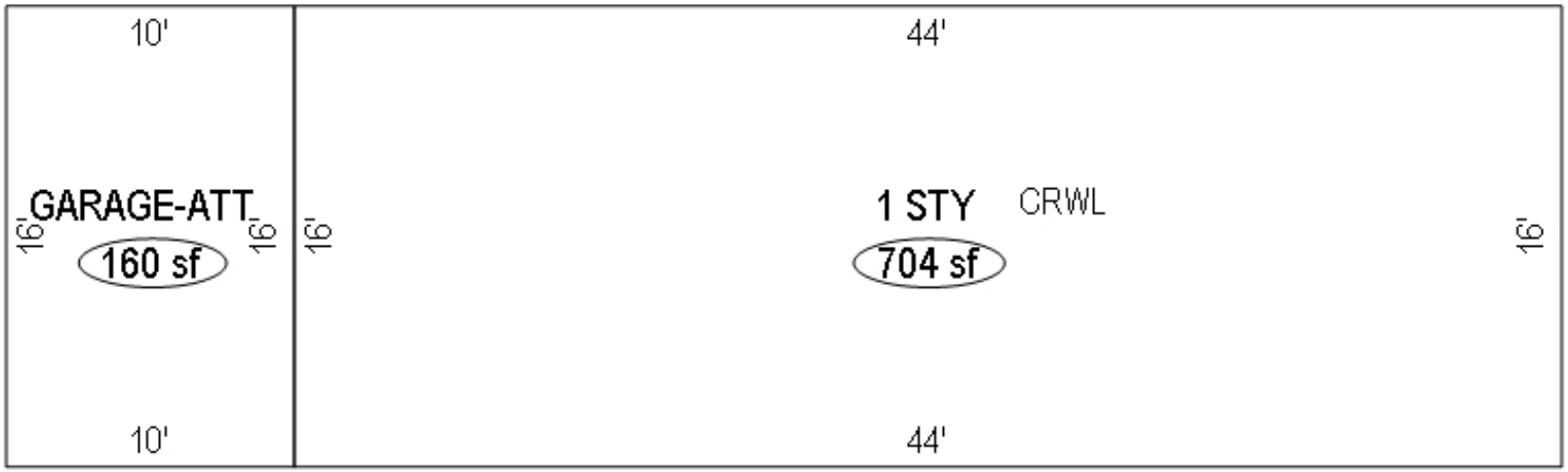

*** Information herein deemed reliable but not guaranteed***

Parcel Number: 2410-04-4301 Jurisdiction: GREENWOOD TWP County: WEXFORD Printed on 02/15/2024

Grantor	Grantee	Sale Price	Sale Date	Inst. Type	Terms of Sale	Liber & Page	Verified By	Prcnt. Trans.
MUTH, EDWARD A & SHELLY M	MUTH, TIMOTHY A	0	07/06/2022	QC	21-NOT USED/OTHER	693/1163	DEED	0.0
MUTH, EDWARD A.	MUTH, EDWARD A & SHELLY M	0	02/02/2022	QC	18-LIFE ESTATE	692/311	DEED	0.0

Property Address

Owner's Name/Address

MUTH, TIMOTHY A
3291 PRIMROSE LN
YPSILANTI MI 48197

Tax Description

PAR COM 99 FT N OF SE COR OF SE 1/4: W 2641.39 FT; N 610.5 FT; E 2641.39 FT; S 610.5 FT TO POB. --37 A. M/L-- GW. SEC. 4 T24N R10W -KINGSLEY-

Comments/Influences

The Equalizer. Copyright (c) 1999 - 2009. Licensed To: Township of Greenwood, County of Wexford, Michigan

Class: RESIDENTIAL-VACANT Zoning:

School: KINGSLEY AREA SCHOOL

P.R.E. 100% / / Qual. Ag.

:

2024 Est TCV 94,045

Building Permit(s)	Date	Number	Status

	Improved	X	Vacant

	Public Improvements
	Dirt Road
	Gravel Road
X	Paved Road
	Storm Sewer
	Sidewalk
	Water
	Sewer
X	Electric
	Gas
	Curb
	Street Lights
	Standard Utilities
	Underground Utils.

	Topography of Site
	Level
X	Rolling
	Low
X	High
	Landscaped
	Swamp
X	Wooded
	Pond
	Waterfront
	Ravine
	Wetland
	Flood Plain
X	OPEN

Who	When	What
GLA	10/31/2022	INSPECTION
GLA	09/28/2015	INSPECTION

Land Value Estimates for Land Table 4010.LAND VALUES

Description	Frontage	Depth	* Factors * Front	Depth	Rate	%Adj.	Reason	Value
ACREAGE			34.550 Acres		2,722	100		94,045
ROW			2.450 Acres		0	100		0
			37.00 Total Acres		Total Est. Land Value =			94,045

Year	Land Value	Building Value	Assessed Value	Board of Review	Tribunal/ Other	Taxable Value
2024	47,000	0	47,000			14,914C
2023	42,300	0	42,300			14,204C
2022	34,500	0	34,500			13,528C
2021	30,200	0	30,200			13,096C

*** Information herein deemed reliable but not guaranteed***

Parcel Number: 2410-04-4302 Jurisdiction: GREENWOOD TWP County: WEXFORD Printed on 02/15/2024

Grantor	Grantee	Sale Price	Sale Date	Inst. Type	Terms of Sale	Liber & Page	Verified By	Prcnt. Trans.
MUTH, DENNIS J ETAL	MUTH, DENNIS J TURST	1	10/20/2020	QC	14-INTO/OUT OF TRUST	688/1873	AGENT	0.0
MUTH, JAMES K.	MUTH, DENNIS J ETAL	1	10/06/2015	QC	21-NOT USED/OTHER	676/1032	DEED	0.0

Property Address

2183 N 29 1/2 RD

Owner's Name/Address

MUTH, DENNIS J TURST
P O BOX 414
HONOR MI 49640

Tax Description

PAR COM 709.5 FT N OF SE COR OF SE 1/4: W 2641.39 FT; N 610.5 FT; E 2641.39 FT; S 610.5 FT TO POB. 37 A. M/L GW. SEC. 4 T24N R10W -KINGSLEY-

Comments/Influences

The Equalizer. Copyright (c) 1999 - 2009. Licensed To: Township of Greenwood, County of Wexford, Michigan

Class: RESIDENTIAL-IMPROV Zoning:
School: KINGSLEY AREA SCHOOL
P.R.E. 100% 06/02/2022 Qual. Ag.
:
2024 Est TCV 99,462 TCV/TFA: 0.00

Building Permit(s)	Date	Number	Status

X Improved | Vacant

	Public Improvements
	Dirt Road
	Gravel Road
X	Paved Road
	Storm Sewer
	Sidewalk
	Water
	Sewer
X	Electric
	Gas
	Curb
	Street Lights
	Standard Utilities
	Underground Utils.

	Topography of Site
	Level
X	Rolling
	Low
	High
	Landscaped
	Swamp
X	Wooded
	Pond
	Waterfront
	Ravine
	Wetland
	Flood Plain
X	OPEN

Who	When	What
GLA	10/31/2022	INSPECTION
GLA	06/11/2015	INSPECTION

Land Value Estimates for Land Table 4010.LAND VALUES

Description	Frontage	Depth	* Factors * Front	Depth	Rate	%Adj.	Reason	Value
ACREAGE			36.540	Acres	2,722	100		99,462
ROW			0.460	Acres	0	100		0
			37.00	Total Acres			Total Est. Land Value =	99,462

Year	Land Value	Building Value	Assessed Value	Board of Review	Tribunal/ Other	Taxable Value
2024	49,700	0	49,700			14,914C
2023	44,400	0	44,400			14,204C
2022	35,800	0	35,800			13,528C
2021	31,600	0	31,600			13,096C

*** Information herein deemed reliable but not guaranteed***

Building Type

X	Single Family
	Mobile Home
	Town Home
	Duplex
	A-Frame
X	Wood Frame

Building Style: PLAIN

Yr Built	Remodeled
0	0

Condition: Good

Room List

	Basement
	1st Floor
	2nd Floor
	Bedrooms

(1) Exterior

X	Wood/Shingle
	Aluminum/Vinyl
	Brick
X	Insulation

(2) Windows

X	Many		Large
	Avg.	X	Avg.
	Few		Small

	Wood Sash
	Metal Sash
X	Vinyl Sash
	Double Hung
	Horiz. Slide
	Casement
	Double Glass
	Patio Doors
X	Storms & Screens

(3) Roof

X	Gable		Gambrel
	Hip		Mansard
	Flat		Shed

X	Asphalt Shingle

Chimney:

(3) Roof (cont.)

	Eavestrough
X	Insulation
0	Front Overhang
0	Other Overhang

(4) Interior

X	Drywall		Plaster
	Paneled		Wood T&G

Trim & Decoration

	Ex	X	Ord		Min

Size of Closets

	Lg	X	Ord		Small

Doors:		Solid	X	H.C.	

(5) Floors

Kitchen:
Other: Linoleum
Other: Carpeted

(6) Ceilings

X	Drywall		

(7) Excavation

Basement: 0 S.F.
Crawl: 0 S.F.
Slab: 0 S.F.
Height to Joists: 0.0

(8) Basement

	Conc. Block
	Poured Conc.
	Stone
	Treated Wood
	Concrete Floor

(9) Basement Finish

	Recreation SF
	Living SF
	Walkout Doors (B)
	No Floor SF
	Walkout Doors (A)

(10) Floor Support

Joists:
Unsupported Len:
Cntr.Sup:

(11) Heating/Cooling

X	Gas		Oil		Elec.
	Wood		Coal		Steam

	Forced Air w/o Ducts
X	Forced Air w/ Ducts
	Forced Hot Water
	Electric Baseboard
	Elec. Ceil. Radiant
	Radiant (in-floor)
	Electric Wall Heat
	Space Heater
	Wall/Floor Furnace
	Forced Heat & Cool
	Heat Pump
	No Heating/Cooling

	Central Air
	Wood Furnace

(12) Electric

150	Amps Service

No./Qual. of Fixtures

	Ex.	X	Ord.		Min

No. of Elec. Outlets

	Many	X	Ave.		Few

(13) Plumbing

1	Average Fixture(s)
	3 Fixture Bath
	2 Fixture Bath
	Softener, Auto
	Softener, Manual
	Solar Water Heat
	No Plumbing
	Extra Toilet
	Extra Sink
	Separate Shower
	Ceramic Tile Floor
	Ceramic Tile Wains
	Ceramic Tub Alcove
	Vent Fan

(14) Water/Sewer

	Public Water
	Public Sewer
	Water Well
	1000 Gal Septic
	2000 Gal Septic

Lump Sum Items:

(15) Built-ins

	Appliance Allow.
	Cook Top
	Dishwasher
	Garbage Disposal
	Bath Heater
	Vent Fan
	Hot Tub
	Unvented Hood
	Vented Hood
	Intercom
	Jacuzzi Tub
	Jacuzzi repl.Tub
	Oven
	Microwave
	Standard Range
	Self Clean Range
	Sauna
	Trash Compactor
	Central Vacuum
	Security System

(15) Fireplaces

	Interior 1 Story
	Interior 2 Story
	2nd/Same Stack
	Two Sided
	Exterior 1 Story
	Exterior 2 Story
	Prefab 1 Story
	Prefab 2 Story
	Heat Circulator
	Raised Hearth
	Wood Stove
	Direct-Vented Gas

Class: CD
Effec. Age: 20
Floor Area: 0
Total Base New : 0 E.C.F.
Total Depr Cost: 0 X 1.297
Estimated T.C.V: 0

(16) Porches/Decks

Area	Type

(17) Garage

Year Built:
Car Capacity:
Class:
Exterior:
Brick Ven.:
Stone Ven.:
Common Wall:
Foundation:
Finished ?:
Auto. Doors:
Mech. Doors:
Area:
% Good:
Storage Area:
No Conc. Floor:

Bsmnt Garage:

Carport Area:
Roof:

Cost Est. for Res. Bldg: 1 Single Family PLAIN Cls CD Blt 0
(11) Heating System: Forced Air w/ Ducts
Ground Area = 0 SF Floor Area = 0 SF.
Phy/Ab.Phy/Func/Econ/Comb. % Good=80/100/100/100/80
Building Areas

Stories	Exterior	Foundation	Size	Cost New	Depr. Cost

Other Additions/Adjustments

	Totals:	0 0

Notes:

ECF (RESIDENTIAL) 1.297 => TCV: 0

*** Information herein deemed reliable but not guaranteed***

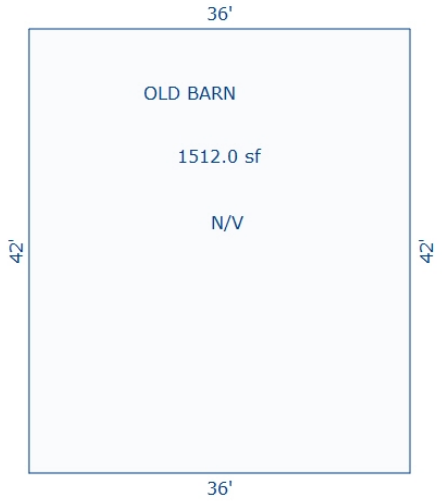

Sketch by Apex Sketch

*** Information herein deemed reliable but not guaranteed***

Parcel Number: 2410-04-4303 Jurisdiction: GREENWOOD TWP County: WEXFORD Printed on 02/15/2024

Grantor	Grantee	Sale Price	Sale Date	Inst. Type	Terms of Sale	Liber & Page	Verified By	Prcnt. Trans.
RONAN, MICHAEL P & PEGGY A	RONAN, MICHAEL P & PEGGY A	0	06/20/2017	WD	18-LIFE ESTATE	6802/062	DEED	0.0
PARKS, LINDA S	PARKS, LINDA S	0	12/08/2014	QC	09-FAMILY	673/918	DEED	0.0
PARKS, LINDA S	RONAN, MICHAEL P & PEGGY A	6,000	12/08/2014	QC	09-FAMILY	673/920	DEED	0.0
MUTH, EARL	RONAN, WM. P.	2,700	09/27/1987	WD	03-ARM'S LENGTH	308:340	DEED	0.0

Property Address

Owner's Name/Address

RONAN, MICHAEL P & PEGGY A LE
11155 RAMBLING WAY
STANWOOD MI 49346

Tax Description

S 99 FT OF SE 1/4, SUB TO EASEMT 6 A. M/L GW. SEC. 4 T24N R10W -KINGSLEY-

Comments/Influences

Class: RESIDENTIAL-VACANT Zoning:

School: KINGSLEY AREA SCHOOL

P.R.E. 0%

:

2024 Est TCV 30,289

Building Permit(s)	Date	Number	Status

	Improved	X	Vacant

	Public Improvements
	Dirt Road
	Gravel Road
X	Paved Road
	Storm Sewer
	Sidewalk
	Water
	Sewer
X	Electric
	Gas
	Curb
	Street Lights
	Standard Utilities
	Underground Utils.

	Topography of Site
	Level
X	Rolling
	Low
X	High
	Landscaped
	Swamp
X	Wooded
	Pond
	Waterfront
	Ravine
	Wetland
	Flood Plain
X	OPEN

Who	When	What
GLA	10/31/2022	INSPECTION
GLA	06/11/2015	INSPECTION

The Equalizer. Copyright (c) 1999 - 2009.
Licensed To: Township of Greenwood, County of Wexford, Michigan

Land Value Estimates for Land Table 4010.LAND VALUES

Description	Frontage	Depth	* Factors * Front	Depth	Rate	%Adj.	Reason	Value
ACREAGE			5.925 Acres		5,112	100		30,289
ROW			0.075 Acres		0	100		0
			6.00 Total Acres		Total Est. Land Value =			30,289

Year	Land Value	Building Value	Assessed Value	Board of Review	Tribunal/ Other	Taxable Value
2024	15,100	0	15,100			2,827C
2023	11,300	0	11,300			2,693C
2022	8,900	0	8,900			2,565C
2021	10,100	0	10,100			2,484C

*** Information herein deemed reliable but not guaranteed***

Parcel Number: 2410-05-1101 Jurisdiction: GREENWOOD TWP County: WEXFORD Printed on 02/15/2024

Grantor	Grantee	Sale Price	Sale Date	Inst. Type	Terms of Sale	Liber & Page	Verified By	Prcnt. Trans.

Property Address

Owner's Name/Address

RODES, JAMES P
& DORIS A
3809 RED SCHOOL RD
KINGSLEY MI 49649

Tax Description

FRL NE 1/4 OF FRL NE 1/4 48.77 A. GW. SEC. 5 T24N R10W-KINGSLEY-

Comments/Influences

Default Comments

Class: AGRICULTURAL-IMPRO Zoning:

School: KINGSLEY AREA SCHOOL

P.R.E. 100% / / Qual. Ag.

:

2024 Est TCV 154,079 TCV/TFA: 0.00

Building Permit(s)	Date	Number	Status
RESIDENTIAL - REMODEL	10/01/2003	PB11888	

X	Improved		Vacant

	Public Improvements
	Dirt Road
	Gravel Road
X	Paved Road
	Storm Sewer
	Sidewalk
	Water
	Sewer
	Electric
	Gas
	Curb
	Street Lights
	Standard Utilities
	Underground Utils.

	Topography of Site
	Level
X	Rolling
	Low
	High
	Landscaped
X	Swamp
X	Wooded
	Pond
	Waterfront
	Ravine
	Wetland
	Flood Plain
X	OPEN

Who	When	What
GLA	05/13/2021	INSPECTION
LM	10/21/2010	INSPECTED

Land Value Estimates for Land Table 1010.AG

Description	Frontage	Depth	* Factors * Front	Depth	Rate	%Adj.	Reason	Value
AG LAND	40 ACRES		47.79 Acres		2690	100		128,555
AG LAND	ROW		0.98 Acres		0	100		0
			48.77 Total Acres				Total Est. Land Value =	128,555

Land Improvement Cost Estimates

Description	Rate	Size	% Good	Cash Value
D/W/P: 3.5 Concrete	5.82	25	10	15
Total Estimated Land Improvements True Cash Value =				15

Year	Land Value	Building Value	Assessed Value	Board of Review	Tribunal/ Other	Taxable Value
2024	64,300	12,700	77,000			27,959C
2023	47,800	11,700	59,500			26,628C
2022	43,000	9,800	52,800			25,360C
2021	40,600	11,900	52,500			24,550C

The Equalizer. Copyright (c) 1999 - 2009. Licensed To: Township of Greenwood, County of Wexford, Michigan

*** Information herein deemed reliable but not guaranteed***

Building Type

X	Single Family
	Mobile Home
	Town Home
	Duplex
	A-Frame
X	Wood Frame

Building Style: GARAGE

Yr Built	Remodeled
0	0

Condition: Average

Room List

	Basement
	1st Floor
	2nd Floor
	Bedrooms

(1) Exterior

X	Wood/Shingle
	Aluminum/Vinyl
	Brick
X	Insulation

(2) Windows

X	Many		Large
	Avg.	X	Avg.
	Few		Small

	Wood Sash
	Metal Sash
X	Vinyl Sash
	Double Hung
	Horiz. Slide
	Casement
	Double Glass
	Patio Doors
X	Storms & Screens

(3) Roof

X	Gable		Gambrel
	Hip		Mansard
	Flat		Shed

X	Asphalt Shingle

Chimney:

(3) Roof (cont.)

	Eavestrough
X	Insulation
0	Front Overhang
0	Other Overhang

(4) Interior

X	Drywall		Plaster
	Paneled		Wood T&G

Trim & Decoration

	Ex	X	Ord		Min

Size of Closets

	Lg	X	Ord		Small

Doors:		Solid	X	H.C.	

(5) Floors

Kitchen:
Other: Linoleum
Other: Carpeted

(6) Ceilings

X	Drywall

(7) Excavation

Basement: 0 S.F.
Crawl: 0 S.F.
Slab: 0 S.F.
Height to Joists: 0.0

(8) Basement

	Conc. Block
	Poured Conc.
	Stone
	Treated Wood
	Concrete Floor

(9) Basement Finish

	Recreation SF
	Living SF
	Walkout Doors (B)
	No Floor SF
	Walkout Doors (A)

(10) Floor Support

Joists:
Unsupported Len:
Cntr.Sup:

(11) Heating/Cooling

X	Gas		Oil		Elec.
	Wood		Coal		Steam

	Forced Air w/o Ducts
	Forced Air w/ Ducts
	Forced Hot Water
	Electric Baseboard
	Elec. Ceil. Radiant
	Radiant (in-floor)
	Electric Wall Heat
X	Space Heater
	Wall/Floor Furnace
	Forced Heat & Cool
	Heat Pump
	No Heating/Cooling

	Central Air
	Wood Furnace

(12) Electric

150	Amps Service

No./Qual. of Fixtures

	Ex.	X	Ord.		Min

No. of Elec. Outlets

	Many	X	Ave.		Few

(13) Plumbing

1	Average Fixture(s)
	3 Fixture Bath
	2 Fixture Bath
	Softener, Auto
	Softener, Manual
	Solar Water Heat
	No Plumbing
	Extra Toilet
	Extra Sink
	Separate Shower
	Ceramic Tile Floor
	Ceramic Tile Wains
	Ceramic Tub Alcove
	Vent Fan

(14) Water/Sewer

	Public Water
	Public Sewer
	Water Well
	1000 Gal Septic
	2000 Gal Septic

Lump Sum Items:

(15) Built-ins

	Appliance Allow.
	Cook Top
	Dishwasher
	Garbage Disposal
	Bath Heater
	Vent Fan
	Hot Tub
	Unvented Hood
	Vented Hood
	Intercom
	Jacuzzi Tub
	Jacuzzi repl.Tub
	Oven
	Microwave
	Standard Range
	Self Clean Range
	Sauna
	Trash Compactor
	Central Vacuum
	Security System

(15) Fireplaces

	Interior 1 Story
	Interior 2 Story
	2nd/Same Stack
	Two Sided
	Exterior 1 Story
	Exterior 2 Story
	Prefab 1 Story
	Prefab 2 Story
	Heat Circulator
	Raised Hearth
	Wood Stove
	Direct-Vented Gas

Class: CD
Effec. Age: 34
Floor Area: 0
Total Base New : 40,856 E.C.F.
Total Depr Cost: 26,965 X 0.946
Estimated T.C.V: 25,509

(16) Porches/Decks

Area	Type
120	WPP
120	WPP
120	Treated Wood

(17) Garage

Year Built:
Car Capacity:
Class: CD
Exterior: Pole
Brick Ven.: 0
Stone Ven.: 0
Common Wall: Detache
Foundation: 18 Inch
Finished ?: Yes
Auto. Doors: 0
Mech. Doors: 0
Area: 1104
% Good: 0
Storage Area: 0
No Conc. Floor: 0

Bsmnt Garage:

Carport Area:
Roof:

Cost Est. for Res. Bldg: 1 Single Family GARAGE Cls CD Blt 0
(11) Heating System: Space Heater
Ground Area = 0 SF Floor Area = 0 SF.
Phy/Ab.Phy/Func/Econ/Comb. % Good=66/100/100/100/66
Building Areas

Stories / Exterior / Foundation	Size	Cost New	Depr. Cost
Other Additions/Adjustments			
Porches			
WPP	120	2,970	1,960
WPP	120	2,970	1,960
Deck			
Treated Wood	120	2,900	1,914
Garages			
Class: CD Exterior: Pole (Finished)			
Base Cost	1104	32,016	21,131
	Totals:	40,856	26,965

Notes:

ECF (AG) 0.946 => TCV: 25,509

*** Information herein deemed reliable but not guaranteed***

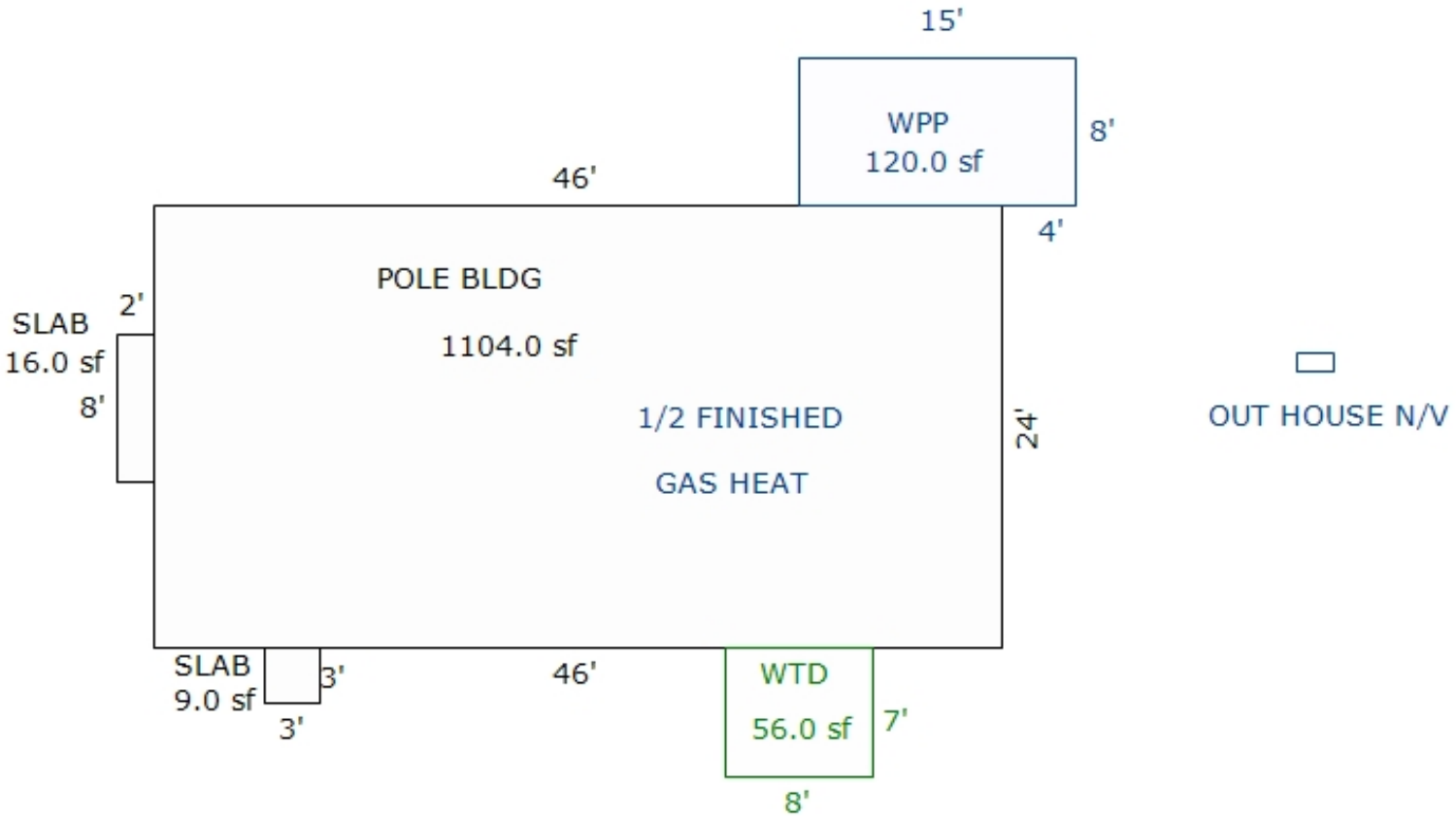

*** Information herein deemed reliable but not guaranteed***

Parcel Number: 2410-05-1201 Jurisdiction: GREENWOOD TWP County: WEXFORD Printed on 02/15/2024

Grantor	Grantee	Sale Price	Sale Date	Inst. Type	Terms of Sale	Liber & Page	Verified By	Prcnt. Trans.
ELDER, MARTHA M & THOMAS E	OLDS, TIMOTHY & RONDA	22,000	03/20/2013	WD	03-ARM'S LENGTH	656/2585	DEED	100.0
ELDER, MARTHA M	ELDER, MARTHA M ETAL	0	03/13/2007	QC	09-FAMILY	598:376	DEED	0.0
BABEL, RICHARD F.	ELDER, THOMAS W.	3,300	10/28/1989	WD	03-ARM'S LENGTH	318:172	DEED	0.0

Property Address

Owner's Name/Address

OLDS, TIMOTHY & RONDA
1101 E 2 RD
KINGSLEY MI 49649

Tax Description

THE E 484 FT OF FRL NW 1/4 OF FRL NE 1/4 --17.85 A.-- GW. SEC. 5 T24N R10W -KINGSLEY-

Comments/Influences

Class: RESIDENTIAL-VACANT Zoning:

School: KINGSLEY AREA SCHOOL

P.R.E. 0%

:

2024 Est TCV 55,968

Building Permit(s)	Date	Number	Status

	Improved	X	Vacant

	Public Improvements
	Dirt Road
	Gravel Road
X	Paved Road
	Storm Sewer
	Sidewalk
	Water
	Sewer
X	Electric
	Gas
	Curb
	Street Lights
	Standard Utilities
	Underground Utils.

	Topography of Site
	Level
X	Rolling
X	Low
	High
	Landscaped
X	Swamp
X	Wooded
	Pond
	Waterfront
	Ravine
	Wetland
	Flood Plain
X	OPEN

Who	When	What
GLA	10/31/2022	INSPECTION
GLA	06/11/2015	INSPECTION

Land Value Estimates for Land Table 4010.LAND VALUES

Description	Frontage	Depth	* Factors * Front	Depth	Rate	%Adj.	Reason	Value
ACREAGE			17.490 Acres		3,200	100		55,968
ROW			0.360 Acres		0	100		0
			17.85 Total Acres		Total Est. Land Value =			55,968

Year	Land Value	Building Value	Assessed Value	Board of Review	Tribunal/ Other	Taxable Value
2024	28,000	0	28,000			17,179C
2023	22,700	0	22,700			16,361C
2022	19,600	0	19,600			15,582C
2021	19,000	0	19,000			15,085C

The Equalizer. Copyright (c) 1999 - 2009.
Licensed To: Township of Greenwood, County of Wexford, Michigan

*** Information herein deemed reliable but not guaranteed***

Parcel Number: 2410-05-1202 Jurisdiction: GREENWOOD TWP County: WEXFORD Printed on 02/15/2024

Grantor	Grantee	Sale Price	Sale Date	Inst. Type	Terms of Sale	Liber & Page	Verified By	Prcnt. Trans.
SWIFT-GODZISZ, RONALD L &	SWIFT-GODZISZ, HOLLY A	0	04/22/2020	WD	09-FAMILY	687/1044	DEED	0.0
SWIFT-GODZISZ, RONALD L &	SWIFT-GODZISZ, RONALD L &	0	06/04/2019	WD	18-LIFE ESTATE	684 / 288	DEED	0.0
SWIFT-GODZISZ, RONALD L	SWIFT-GODZISZ, RONALD L &	0	08/28/2018	WD	21-NOT USED/OTHER	683 /1309	DEED	0.0
HOLLEN LLC	SWIFT-GODZISZ, RONALD L	0	01/30/2018	WD	21-NOT USED/OTHER	681/2662	DEED	0.0

Property Address

1522 E COUNTY LINE RD

Owner's Name/Address

SWIFT-GODZISZ, HOLLY A
1407 CADMUS DR
TROY MI 48085

Tax Description

BEG AT N 1/4 COR OF SEC; E 824.24 FT; S 1608.57 FT;W 950.76 FT; N 1604.76 FT; E 121.03 FT TO POB. 34.95 A M/L GW. SEC. 5 T24N R10W -KINGSLEY-

Comments/Influences

Default Comments

Class: RESIDENTIAL-IMPROV Zoning:

School: KINGSLEY AREA SCHOOL

P.R.E. 0%

:

2024 Est TCV 154,126 TCV/TFA: 214.06

Building Permit(s)	Date	Number	Status
RESIDENTIAL - REMODEL	10/31/2001	PB10668	
RESIDENTIAL - REMODEL	09/25/2001	PM5291	

X Improved | Vacant

Public Improvements

- Dirt Road
- X Gravel Road
- X Paved Road
- Storm Sewer
- Sidewalk
- Water
- Sewer
- X Electric
- Gas
- Curb
- Street Lights
- Standard Utilities
- Underground Utils.

Topography of Site

- Level
- X Rolling
- X Low
- High
- Landscaped
- Swamp
- X Wooded
- Pond
- Waterfront
- Ravine
- Wetland
- Flood Plain
- X OPEN

Who When What

GLA 10/31/2022 INSPECTION
GLA 06/11/2015 INSPECTED

Land Value Estimates for Land Table 4010.LAND VALUES

Description	Frontage	Depth	* Factors * Front	Depth	Rate	%Adj.	Reason	Value
ACREAGE			34.230 Acres		2,722	100		93,174
ROW			0.720 Acres		0	100		0
			34.95 Total Acres				Total Est. Land Value =	93,174

Land Improvement Cost Estimates

Description	Rate	Size	% Good	Cash Value
D/W/P: 4in Concrete	6.11	56	49	168
Wood Frame	23.02	100	10	230
Wood Frame	18.03	484	10	873
Total Estimated Land Improvements True Cash Value =				1,271

Year	Land Value	Building Value	Assessed Value	Board of Review	Tribunal/ Other	Taxable Value
2024	46,600	30,500	77,100			47,677C
2023	41,900	24,700	66,600			45,407C
2022	34,200	20,600	54,800			43,245C
2021	30,000	20,400	50,400			41,864C

The Equalizer. Copyright (c) 1999 - 2009. Licensed To: Township of Greenwood, County of Wexford, Michigan

*** Information herein deemed reliable but not guaranteed***

Building Type

X	Single Family
	Mobile Home
	Town Home
	Duplex
	A-Frame
X	Wood Frame

Building Style: PLAIN

Yr Built	Remodeled
0	0

Condition: Fair

Room List

	Basement
	1st Floor
	2nd Floor
	Bedrooms

(1) Exterior

	Wood/Shingle
	Aluminum/Vinyl
	Brick
X	Vinyl
	Insulation

(2) Windows

X	Many		Large
	Avg.	X	Avg.
	Few		Small

	Wood Sash
	Metal Sash
X	Vinyl Sash
X	Double Hung
	Horiz. Slide
	Casement
	Double Glass
	Patio Doors
X	Storms & Screens

(3) Roof

X	Gable		Gambrel
	Hip		Mansard
	Flat		Shed

X	Asphalt Shingle

Chimney: Metal

(3) Roof (cont.)

	Eavestrough
	Insulation
0	Front Overhang
0	Other Overhang

(4) Interior

	Drywall		Plaster
	Paneled		Wood T&G

Trim & Decoration

	Ex		Ord		Min

Size of Closets

	Lg		Ord		Small

Doors:		Solid		H.C.

(5) Floors

Kitchen:
Other:
Other:

(6) Ceilings

(7) Excavation

Basement: 0 S.F.
Crawl: 0 S.F.
Slab: 720 S.F.
Height to Joists: 0.0

(8) Basement

	Conc. Block
	Poured Conc.
	Stone
	Treated Wood
	Concrete Floor

(9) Basement Finish

	Recreation	SF
	Living	SF
	Walkout Doors (B)	
	No Floor	SF
	Walkout Doors (A)	

(10) Floor Support

Joists:
Unsupported Len:
Cntr.Sup:

(11) Heating/Cooling

X	Gas		Oil		Elec.
	Wood		Coal		Steam

	Forced Air w/o Ducts
X	Forced Air w/ Ducts
	Forced Hot Water
	Electric Baseboard
	Elec. Ceil. Radiant
	Radiant (in-floor)
	Electric Wall Heat
	Space Heater
	Wall/Floor Furnace
	Forced Heat & Cool
	Heat Pump
	No Heating/Cooling

	Central Air
	Wood Furnace

(12) Electric

0	Amps Service

No./Qual. of Fixtures

	Ex.		Ord.		Min

No. of Elec. Outlets

	Many		Ave.		Few

(13) Plumbing

1	Average Fixture(s)
	3 Fixture Bath
	2 Fixture Bath
	Softener, Auto
	Softener, Manual
	Solar Water Heat
	No Plumbing
	Extra Toilet
	Extra Sink
	Separate Shower
	Ceramic Tile Floor
	Ceramic Tile Wains
	Ceramic Tub Alcove
	Vent Fan

(14) Water/Sewer

	Public Water
	Public Sewer
1	Water Well
1	1000 Gal Septic
	2000 Gal Septic

Lump Sum Items:

(15) Built-ins

	Appliance Allow.
	Cook Top
	Dishwasher
	Garbage Disposal
	Bath Heater
	Vent Fan
	Hot Tub
	Unvented Hood
	Vented Hood
	Intercom
	Jacuzzi Tub
	Jacuzzi repl.Tub
	Oven
	Microwave
	Standard Range
	Self Clean Range
	Sauna
	Trash Compactor
	Central Vacuum
	Security System

(15) Fireplaces

	Interior 1 Story
	Interior 2 Story
	2nd/Same Stack
	Two Sided
	Exterior 1 Story
	Exterior 2 Story
	Prefab 1 Story
	Prefab 2 Story
	Heat Circulator
	Raised Hearth
	Wood Stove
	Direct-Vented Gas

Class: D
Effec. Age: 68
Floor Area: 720
Total Base New : 102,261 E.C.F.
Total Depr Cost: 46,015 X 1.297
Estimated T.C.V: 59,681

(16) Porches/Decks

Area	Type
100	CGEP (1 Story)
288	Treated Wood

(17) Garage

Year Built:
Car Capacity:
Class:
Exterior:
Brick Ven.:
Stone Ven.:
Common Wall:
Foundation:
Finished ?:
Auto. Doors:
Mech. Doors:
Area:
% Good:
Storage Area:
No Conc. Floor:

Bsmnt Garage:

Carport Area:
Roof:

Cost Est. for Res. Bldg: 1 Single Family PLAIN Cls D Blt 0
(11) Heating System: Forced Air w/ Ducts
Ground Area = 720 SF Floor Area = 720 SF.
Phy/Ab.Phy/Func/Econ/Comb. % Good=45/100/100/100/45
Building Areas

Stories	Exterior	Foundation	Size	Cost New	Depr. Cost
1 Story	Siding	Slab	720		
			Total:	81,289	36,578
Other Additions/Adjustments					
Water/Sewer					
1000 Gal Septic			1	4,293	1,932
Water Well, 100 Feet			1	5,545	2,495
Porches					
CGEP (1 Story)			100	6,071	2,732
Deck					
Treated Wood			288	5,063	2,278
			Totals:	102,261	46,015

Notes:

ECF (RESIDENTIAL) 1.297 => TCV: 59,681

*** Information herein deemed reliable but not guaranteed***

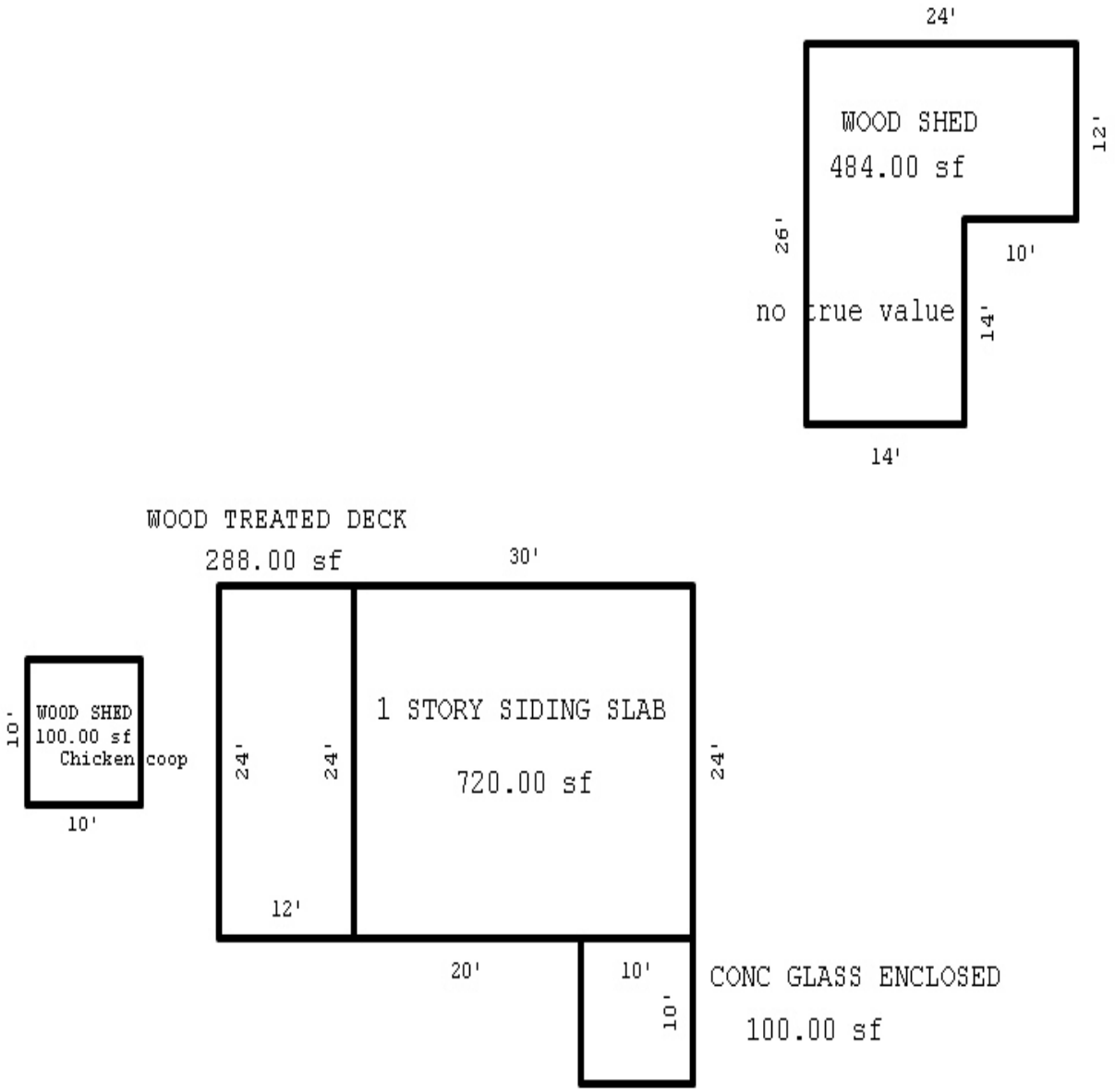

Sketch by Apex Medina™

*** Information herein deemed reliable but not guaranteed***

Parcel Number: 2410-05-1301-03 Jurisdiction: GREENWOOD TWP County: WEXFORD Printed on 02/15/2024

Grantor	Grantee	Sale Price	Sale Date	Inst. Type	Terms of Sale	Liber & Page	Verified By	Prcnt. Trans.
ARLT, CAROLYN A & DONALD R	ARLT, CAROLYN A & DONALD F	0	03/27/2018	WD	18-LIFE ESTATE	682 /626	DEED	0.0
ALDRICH, KENNETH & JOANNA	BOGART, JACOB & JOANN & C	20,000	09/22/2011	WD	16-LC PAYOFF	643/577	DEED	0.0
ARLT, DONALD & CAROLYN	ALDRICH, KENNETH L & JOANN	0	06/23/2008	WD	03-ARM'S LENGTH	612/1800	DEED	0.0
ARLT, DONALD R. & CAROLYN	BOGART, JACOB & JOANN	20,000	03/28/2008	LC	31-SPLIT IMPROVED	609/2279	DEED	100.0

Property Address

1757 E 2 1/2 RD

Owner's Name/Address

ARLT, CAROLYN A & DONALD R LE
1757 E 2 1/2 RD
KINGSLEY MI 49649

Tax Description

SE 1/4 OF SW 1/4 OF FRL NE 1/4 EXC W 410 FT OF S 250 FT-7.65 A M/L-- GW. SEC. 5 T24N R10W -KINGSLEY- SPLIT ON 05/27/08 FROM 2410-05-1301-02

Comments/Influences

SPLIT/COMB. ON 11/07/2007 COMPLETED 3/06/09 DEB OWNER REQUEST ;
PARENT PARCEL(S): 2410-05-1301;
CHILD PARCEL(S): 2410-05-1301-03, 2410-05-1301-04;

The Equalizer. Copyright (c) 1999 - 2009. Licensed To: Township of Greenwood, County of Wexford, Michigan

Class: RESIDENTIAL-IMPROV Zoning:
School: KINGSLEY AREA SCHOOL
P.R.E. 100% 04/05/2012
:
2024 Est TCV 501,189 TCV/TFA: 288.04

Building Permit(s)	Date	Number	Status
RESIDENTIAL - NEW	11/09/2007	PB13761	
RESIDENTIAL - NEW	11/09/2007	PE18124	
RESIDENTIAL - NEW	11/09/2007	PM9910	
RESIDENTIAL - NEW	11/09/2007	PP4588	

X	Improved		Vacant

	Public Improvements
	Dirt Road
	Gravel Road
X	Paved Road
	Storm Sewer
	Sidewalk
	Water
	Sewer
	Electric
	Gas
	Curb
	Street Lights
	Standard Utilities
	Underground Utils.

	Topography of Site
	Level
X	Rolling
	Low
	High
	Landscaped
	Swamp
X	Wooded
	Pond
	Waterfront
	Ravine
	Wetland
	Flood Plain
X	OPEN

Who	When	What
GLA	06/11/2015	INSPECTION

Land Value Estimates for Land Table 4010.LAND VALUES

Description	Frontage	Depth	* Factors * Front	Depth	Rate	%Adj.	Reason	Value
ACREAGE			7.470 Acres		5,012	100		37,439
ROW			0.180 Acres		0	100		0
			7.65 Total Acres				Total Est. Land Value =	37,439

Land Improvement Cost Estimates

Description	Rate	Size	% Good	Cash Value
D/W/P: 4in Concrete	6.11	1344	60	4,927
D/W/P: 4in Concrete	6.11	13484	60	49,432
D/W/P: 4in Concrete	6.11	440	60	1,613
D/W/P: 4in Concrete	6.11	219	60	803
Total Estimated Land Improvements True Cash Value =				56,775

Year	Land Value	Building Value	Assessed Value	Board of Review	Tribunal/ Other	Taxable Value
2024	18,700	231,900	250,600			149,533C
2023	12,100	192,500	204,600			142,413C
2022	10,700	164,200	174,900			135,632C
2021	11,900	164,100	176,000			131,300C

*** Information herein deemed reliable but not guaranteed***

Building Type

X	Single Family
	Mobile Home
	Town Home
	Duplex
	A-Frame
X	Wood Frame

Building Style: PLAIN

Yr Built	Remodeled
2008	0

Condition: Good

Room List

	Basement
	1st Floor
	2nd Floor
	Bedrooms

(1) Exterior

	Wood/Shingle
X	Aluminum/Vinyl
	Brick
X	Insulation

(2) Windows

X	Many Avg. Few	X	Large Avg. Small

	Wood Sash
	Metal Sash
X	Vinyl Sash
	Double Hung
	Horiz. Slide
	Casement
	Double Glass
	Patio Doors
X	Storms & Screens

(3) Roof

X	Gable		Gambrel
	Hip		Mansard
	Flat		Shed

X	Asphalt Shingle

Chimney:

(3) Roof (cont.)

	Eavestrough
X	Insulation
0	Front Overhang
0	Other Overhang

(4) Interior

X	Drywall		Plaster
	Paneled		Wood T&G

Trim & Decoration

	Ex	X	Ord		Min

Size of Closets

	Lg	X	Ord		Small

Doors:		Solid	X	H.C.	

(5) Floors

Kitchen:
Other: Linoleum
Other: Carpeted

(6) Ceilings

X	Drywall

(7) Excavation

Basement: 1740 S.F.
Crawl: 0 S.F.
Slab: 0 S.F.
Height to Joists: 0.0

(8) Basement

	Conc. Block
	Poured Conc.
	Stone
	Treated Wood
	Concrete Floor

(9) Basement Finish

	Recreation	SF
1620	Living	SF
1	Walkout Doors (B)	
	No Floor	SF
	Walkout Doors (A)	

(10) Floor Support

Joists:
Unsupported Len:
Cntr.Sup:

(11) Heating/Cooling

X	Gas		Oil		Elec.
	Wood		Coal		Steam

	Forced Air w/o Ducts
X	Forced Air w/ Ducts
	Forced Hot Water
	Electric Baseboard
	Elec. Ceil. Radiant
	Radiant (in-floor)
	Electric Wall Heat
	Space Heater
	Wall/Floor Furnace
	Forced Heat & Cool
	Heat Pump
	No Heating/Cooling

	Central Air
	Wood Furnace

(12) Electric

150	Amps Service

No./Qual. of Fixtures

	Ex.	X	Ord.		Min

No. of Elec. Outlets

	Many	X	Ave.		Few

(13) Plumbing

	Average Fixture(s)
3	3 Fixture Bath
	2 Fixture Bath
	Softener, Auto
	Softener, Manual
	Solar Water Heat
	No Plumbing
	Extra Toilet
	Extra Sink
	Separate Shower
	Ceramic Tile Floor
	Ceramic Tile Wains
	Ceramic Tub Alcove
	Vent Fan

(14) Water/Sewer

	Public Water
	Public Sewer
1	Water Well
1	1000 Gal Septic
	2000 Gal Septic

Lump Sum Items:

(15) Built-ins

	Appliance Allow.
	Cook Top
	Dishwasher
	Garbage Disposal
	Bath Heater
	Vent Fan
	Hot Tub
	Unvented Hood
	Vented Hood
	Intercom
	Jacuzzi Tub
	Jacuzzi repl.Tub
	Oven
	Microwave
	Standard Range
	Self Clean Range
	Sauna
	Trash Compactor
	Central Vacuum
	Security System

(15) Fireplaces

	Interior 1 Story
	Interior 2 Story
	2nd/Same Stack
	Two Sided
	Exterior 1 Story
	Exterior 2 Story
	Prefab 1 Story
	Prefab 2 Story
	Heat Circulator
	Raised Hearth
	Wood Stove
	Direct-Vented Gas

Class: CD
Effec. Age: 16
Floor Area: 1,740
Total Base New : 373,550 E.C.F.
Total Depr Cost: 313,782 X 1.297
Estimated T.C.V: 406,975

(16) Porches/Decks

Area	Type

(17) Garage

Year Built:
Car Capacity:
Class: C
Exterior: Siding
Brick Ven.: 0
Stone Ven.: 0
Common Wall: 1 Wall
Foundation: 42 Inch
Finished ?:
Auto. Doors: 0
Mech. Doors: 0
Area: 840
% Good: 0
Storage Area: 400
No Conc. Floor: 0

Bsmnt Garage:

Carport Area:
Roof:

Cost Est. for Res. Bldg: 1 Single Family PLAIN Cls CD Blt 2008
(11) Heating System: Forced Air w/ Ducts
Ground Area = 1740 SF Floor Area = 1740 SF.
Phy/Ab.Phy/Func/Econ/Comb. % Good=84/100/100/100/84
Building Areas

Stories	Exterior	Foundation	Size	Cost New	Depr. Cost
1 Story	Siding	Basement	1,740		
			Total:	216,448	181,816
Other Additions/Adjustments					
Basement Living Area			1620	54,545	45,818
Basement, Outside Entrance, Below Grade			1	2,176	1,828
Plumbing					
3 Fixture Bath			2	7,775	6,531
Water/Sewer					
1000 Gal Septic			1	4,582	3,849
Water Well, 100 Feet			1	5,680	4,771
Garages					
Class: C Exterior: Siding Foundation: 42 Inch (Unfinished)					
Base Cost			840	32,533	27,328
Storage Over Garage			400	5,536	4,650
Common Wall: 1 Wall			1	-2,705	-2,272
Class: CD Exterior: Pole (Unfinished)					
Base Cost			2160	46,980	39,463
			Totals:	373,550	313,782

Notes:

ECF (RESIDENTIAL) 1.297 => TCV: 406,975

*** Information herein deemed reliable but not guaranteed***

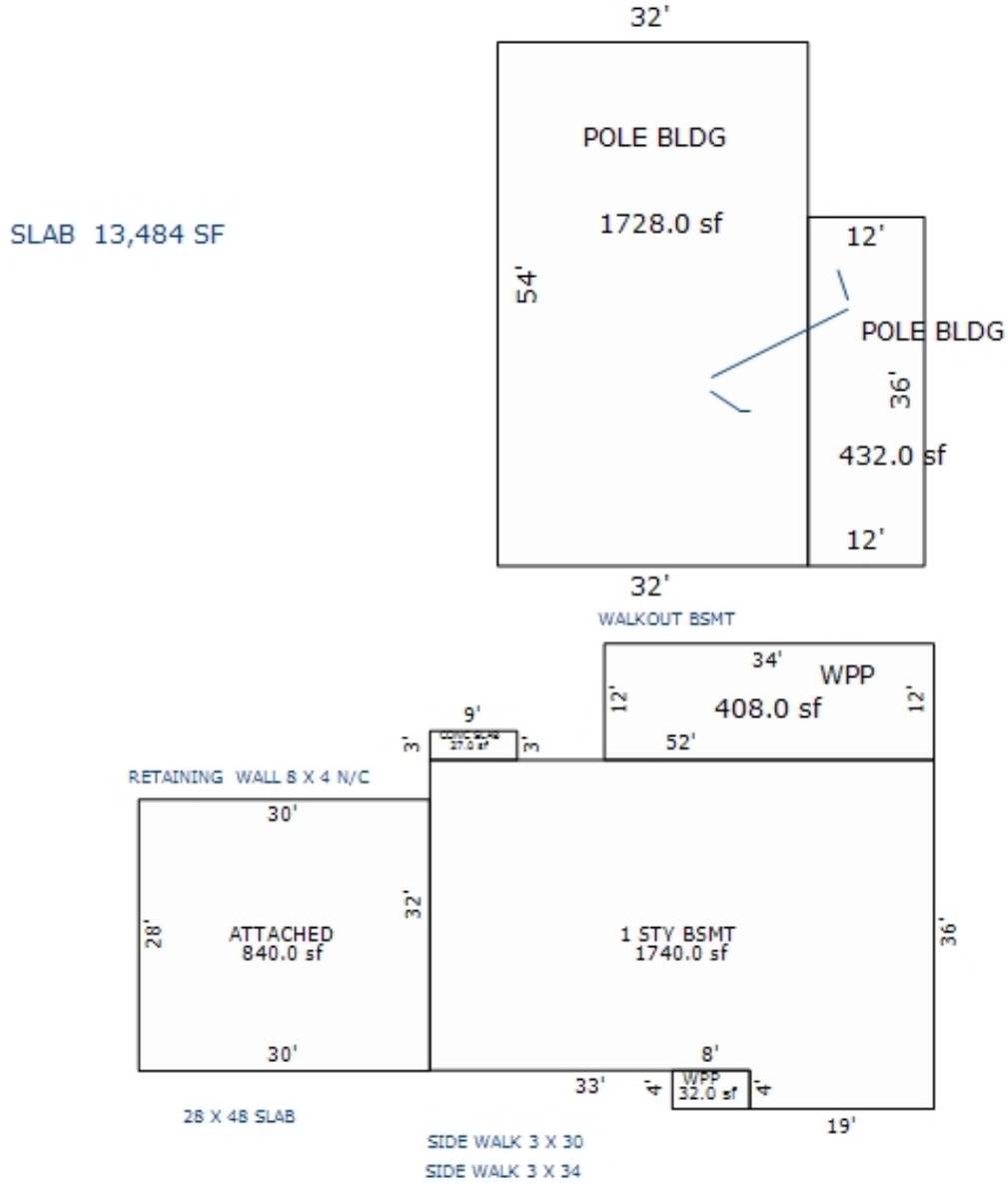

*** Information herein deemed reliable but not guaranteed***

Parcel Number: 2410-05-1301-05 Jurisdiction: GREENWOOD TWP County: WEXFORD Printed on 02/15/2024

Grantor	Grantee	Sale Price	Sale Date	Inst. Type	Terms of Sale	Liber & Page	Verified By	Prcnt. Trans.
ARLT, DONALD	FIRST NATIONAL ACCEPTANCE	0	12/21/2017	QC	21-NOT USED/OTHER	681 /2069/2070	DEED	0.0
ARLT, DONALD & MICHELE	SEITZ, ALLEN & JENNIFER	100,000	12/11/2015	MLC	03-ARM'S LENGTH	676/1867	DEED	100.0

Property Address

1749 E 2 1/2 RD

Owner's Name/Address

SEITZ, ALLEN & JENNIFER
1749 E 2 1/2 RD
KINGSLEY MI 49649

Tax Description

S 250 FT OF W 410 FT EXC W 60 FT THEREOF OF SE 1/4 OF SW/ 1/4 OR NE 1/4 E 2 A M/L-- GW. SEC. 5 T24N R10W -KINGSLEY- SPLIT ON 11/07/2007 FROM 2410-05-1301;

Comments/Influences

Default Comments

Class: RESIDENTIAL-IMPROV Zoning:

School: KINGSLEY AREA SCHOOL

P.R.E. 100% 01/28/2016

:

2024 Est TCV 232,042 TCV/TFA: 87.23

Building Permit(s)	Date	Number	Status

X	Improved		Vacant

Public Improvements

- Dirt Road
- Gravel Road
- Paved Road
- Storm Sewer
- Sidewalk
- Water
- Sewer
- Electric
- Gas
- Curb
- Street Lights
- Standard Utilities
- Underground Utils.

Topography of Site

- Level
- Rolling
- Low
- High
- Landscaped
- Swamp
- Wooded
- Pond
- Waterfront
- Ravine
- Wetland
- Flood Plain

Who	When	What
GLA	05/13/2021	INSPECTION

Land Value Estimates for Land Table 4010.LAND VALUES

Description	Frontage	Depth	* Factors * Front	Depth	Rate	%Adj.	Reason	Value
ACREAGE			1.500 Acres		10,953	100		16,430
ROW			0.500 Acres		0	100		0
			2.00 Total Acres		Total Est. Land Value =			16,430

Land Improvement Cost Estimates

Description	Rate	Size	% Good	Cash Value
D/W/P: 3.5 Concrete	6.21	628	68	2,652
Wood Frame	31.41	64	68	1,367
Total Estimated Land Improvements True Cash Value =				4,019

Year	Land Value	Building Value	Assessed Value	Board of Review	Tribunal/ Other	Taxable Value
2024	8,200	107,800	116,000			76,466C
2023	4,500	89,000	93,500			72,825C
2022	3,800	75,800	79,600			69,358C
2021	4,500	79,300	83,800			67,143C

The Equalizer. Copyright (c) 1999 - 2009. Licensed To: Township of Greenwood, County of Wexford, Michigan

*** Information herein deemed reliable but not guaranteed***

Building Type

X	Single Family
	Mobile Home
	Town Home
	Duplex
	A-Frame
X	Wood Frame

Building Style: FARMHOUSE

Yr Built	Remodeled
1900	0

Condition: Average

Room List

	Basement
	1st Floor
	2nd Floor
	Bedrooms

(1) Exterior

	Wood/Shingle
	Aluminum/Vinyl
	Brick
X	Vinyl
	Insulation

(2) Windows

X	Many		Large
	Avg.	X	Avg.
	Few		Small

X	Wood Sash
	Metal Sash
X	Vinyl Sash
X	Double Hung
	Horiz. Slide
X	Casement
	Double Glass
	Patio Doors
X	Storms & Screens

(3) Roof

X	Gable		Gambrel
	Hip		Mansard
	Flat		Shed

X	Asphalt Shingle

Chimney: Block

(3) Roof (cont.)

	Eavestrough
	Insulation
12	Front Overhang
12	Other Overhang

(4) Interior

	Drywall		Plaster
	Paneled		Wood T&G

Trim & Decoration

	Ex	X	Ord		Min

Size of Closets

	Lg	X	Ord		Small

Doors:		Solid	X	H.C.	

(5) Floors

Kitchen:
Other:
Other:

(6) Ceilings

(7) Excavation

Basement: 0 S.F.
Crawl: 1860 S.F.
Slab: 0 S.F.
Height to Joists: 0.0

(8) Basement

	Conc. Block
	Poured Conc.
	Stone
	Treated Wood
	Concrete Floor

(9) Basement Finish

	Recreation SF
	Living SF
	Walkout Doors (B)
	No Floor SF
	Walkout Doors (A)

(10) Floor Support

Joists:
Unsupported Len:
Cntr.Sup:

(11) Heating/Cooling

X	Gas		Oil		Elec.
	Wood		Coal		Steam

	Forced Air w/o Ducts
X	Forced Air w/ Ducts
	Forced Hot Water
	Electric Baseboard
	Elec. Ceil. Radiant
	Radiant (in-floor)
	Electric Wall Heat
	Space Heater
	Wall/Floor Furnace
	Forced Heat & Cool
	Heat Pump
	No Heating/Cooling

	Central Air
	Wood Furnace

(12) Electric

0	Amps Service

No./Qual. of Fixtures

	Ex.	X	Ord.		Min

No. of Elec. Outlets

	Many	X	Ave.		Few

(13) Plumbing

2	Average Fixture(s)
	3 Fixture Bath
	2 Fixture Bath
	Softener, Auto
	Softener, Manual
	Solar Water Heat
	No Plumbing
	Extra Toilet
	Extra Sink
	Separate Shower
	Ceramic Tile Floor
	Ceramic Tile Wains
	Ceramic Tub Alcove
	Vent Fan

(14) Water/Sewer

	Public Water
	Public Sewer
1	Water Well
1	1000 Gal Septic
	2000 Gal Septic

Lump Sum Items:
1,500

(15) Built-ins

	Appliance Allow.
	Cook Top
	Dishwasher
	Garbage Disposal
	Bath Heater
	Vent Fan
	Hot Tub
	Unvented Hood
	Vented Hood
	Intercom
	Jacuzzi Tub
	Jacuzzi repl.Tub
	Oven
	Microwave
	Standard Range
	Self Clean Range
	Sauna
	Trash Compactor
	Central Vacuum
	Security System

(15) Fireplaces

	Interior 1 Story
	Interior 2 Story
	2nd/Same Stack
	Two Sided
	Exterior 1 Story
	Exterior 2 Story
	Prefab 1 Story
	Prefab 2 Story
	Heat Circulator
	Raised Hearth
	Wood Stove
	Direct-Vented Gas

Class: CD
Effec. Age: 54
Floor Area: 2,660
Total Base New : 368,045 E.C.F.
Total Depr Cost: 163,140 X 1.297
Estimated T.C.V: 211,593

(16) Porches/Decks

Area	Type
280	WGEP (1 Story)
320	WPP

(17) Garage

Year Built:
Car Capacity:
Class: CD
Exterior: Siding
Brick Ven.: 0
Stone Ven.: 0
Common Wall: 1/2 Wal
Foundation: 42 Inch
Finished ?:
Auto. Doors: 0
Mech. Doors: 0
Area: 1200
% Good: 0
Storage Area: 0
No Conc. Floor: 0

Bsmnt Garage:

Carport Area:
Roof:

Cost Est. for Res. Bldg: 1 Single Family FARMHOUSE Cls CD Blt 1900
(11) Heating System: Forced Air w/ Ducts
Ground Area = 1860 SF Floor Area = 2660 SF.
Phy/Ab.Phy/Func/Econ/Comb. % Good=46/100/100/100/46
Building Areas

Stories	Exterior	Foundation	Size	Cost New	Depr. Cost	
1 Story	Siding	Crawl Space	1,060			
2 Story	Siding	Crawl Space	800			
			Total:	265,963	122,343	
Other Additions/Adjustments						
Plumbing						
3 Fixture Bath			1	3,887	1,788	
Water/Sewer						
1000 Gal Septic			1	4,582	2,108	
Water Well, 100 Feet			1	5,680	2,613	
Porches						
WGEP (1 Story)			280	17,416	8,011	
WPP			320	4,794	2,205	
Garages						
Class: CD Exterior: Siding Foundation: 42 Inch (Unfinished)						
Common Wall: 1/2 Wall			1	-1,261	-580	
Base Cost			1200	38,700	17,802	
Class: D Exterior: Block Foundation: 18 Inch (Unfinished)						
Base Cost			900	26,784	6,160	*2
Lump Sum Items						
THREE OUTBUILDINGS				1,500	690	
			Totals:	368,045	163,140	

Notes:
ECF (RESIDENTIAL) 1.297 => TCV: 211,593

*** Information herein deemed reliable but not guaranteed***

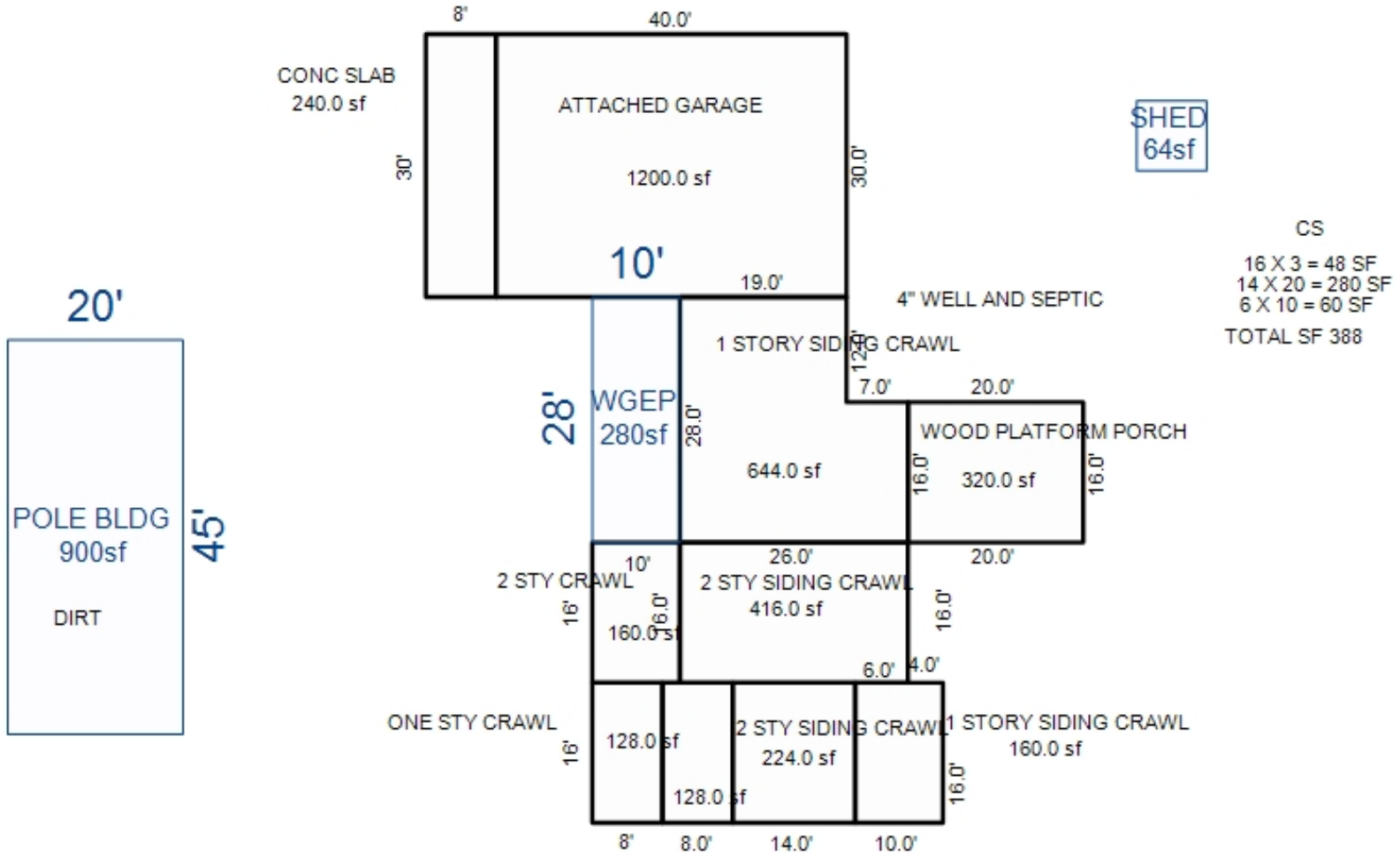

*** Information herein deemed reliable but not guaranteed***

Parcel Number: 2410-05-1301-06 Jurisdiction: GREENWOOD TWP County: WEXFORD Printed on 02/15/2024

Grantor	Grantee	Sale Price	Sale Date	Inst. Type	Terms of Sale	Liber & Page	Verified By	Prcnt. Trans.
MEINER, SCOTT	ABBRING, BRIAN J	265,000	09/08/2020	WD	03-ARM'S LENGTH	688/614	AGENT	100.0
ARLT, DON & MICHELE	MEINER, SCOTT	0	12/17/2019	WD	16-LC PAYOFF	688/613	AGENT	0.0
ARLT, DONALD & MICHELE	MEINER, SCOTT	285,000	06/05/2019	MLC	03-ARM'S LENGTH	685/482	DEED	100.0

Property Address

1770 E 2 1/2 RD

Owner's Name/Address

ABBRING, BRIAN J
1770 E 2 1/2 RD
KINGSLEY MI 49649

Tax Description

PARCEL A : PART OF S1/2 OF NE 1/4 DESC AS BEG AT E 1/4 COR OF SD SEC; W 219.95 FT; N 500 FT; W 440 FT; N 162.20FT; W 1315.49 FT; S 662.30 FT; W 659.95 FT ; N 1324.56 FT; E 2626.56 FT; S 1324.74 FT TO POB 54.95 AC M/L -- GW. SEC. 5 T24N R10W
-KINGSLEY-
SPLIT ON 11/07/2007 FROM 2410-05-1301;SPLIT ON 12-28-2015 TO 2410-05-1301; 1-4-2016 COMBINED WITH 2410-05-1301-02 & 2410-05-1301-04 SPLIT/COMBINED ON 01/28/2020 FROM 2410-05-1301-01;

The Equalizer. Copyright (c) 1999 - 2009. Licensed To: Township of Greenwood, County of Wexford, Michigan

Class: RESIDENTIAL-IMPROV Zoning:
School: KINGSLEY AREA SCHOOL
P.R.E. 100% 09/23/2020
:
2024 Est TCV 591,784 TCV/TFA: 156.39

Building Permit(s)	Date	Number	Status
Res. Add/Alter/Repair	09/10/2020	PB20-0002	COMPLETE

X Improved | Vacant

Public Improvements

Dirt Road
Gravel Road
Paved Road
Storm Sewer
Sidewalk
Water
Sewer
Electric
Gas
Curb
Street Lights
Standard Utilities
Underground Utils.

Topography of Site

Level
Rolling
Low
High
Landscaped
Swamp
Wooded
Pond
Waterfront
Ravine
Wetland
Flood Plain

Who	When	What
GLA	10/31/2022	INSPECTION

Land Value Estimates for Land Table 4010.LAND VALUES

Description	Frontage	Depth	* Factors * Front	Depth	Rate	%Adj.	Reason	Value
ACREAGE			54.784 Acres		2,680	100		146,807
			0.165 Acres		0	100		0
			54.95 Total Acres		Total Est. Land Value =			146,807

Year	Land Value	Building Value	Assessed Value	Board of Review	Tribunal/ Other	Taxable Value
2024	73,400	222,500	295,900			219,728C
2023	73,700	181,300	255,000			209,265C
2022	46,600	152,700	199,300			199,300S
2021	45,600	100,300	145,900			145,900S

*** Information herein deemed reliable but not guaranteed***

Building Type

X	Single Family
	Mobile Home
	Town Home
	Duplex
	A-Frame
X	Wood Frame

Building Style: PLAIN

Yr Built	Remodeled
0	0

Condition: Good

Room List

	Basement
	1st Floor
	2nd Floor
	Bedrooms

(1) Exterior

	Wood/Shingle
X	Aluminum/Vinyl
	Brick
X	Insulation

(2) Windows

	Many		Large
X	Avg.	X	Avg.
	Few		Small

	Wood Sash
	Metal Sash
X	Vinyl Sash
	Double Hung
	Horiz. Slide
	Casement
	Double Glass
	Patio Doors
X	Storms & Screens

(3) Roof

X	Gable		Gambrel
	Hip		Mansard
	Flat		Shed

X	Asphalt Shingle

Chimney:

(3) Roof (cont.)

	Eavestrough
X	Insulation
0	Front Overhang
0	Other Overhang

(4) Interior

X	Drywall		Plaster
	Paneled		Wood T&G

Trim & Decoration

	Ex	X	Ord		Min

Size of Closets

	Lg	X	Ord		Small

Doors:		Solid	X	H.C.	

(5) Floors

Kitchen:
Other: Linoleum
Other: Carpeted

(6) Ceilings

X	Drywall		

(7) Excavation

Basement: 0 S.F.
Crawl: 0 S.F.
Slab: 1892 S.F.
Height to Joists: 0.0

(8) Basement

	Conc. Block
	Poured Conc.
	Stone
	Treated Wood
	Concrete Floor

(9) Basement Finish

	Recreation SF
	Living SF
	Walkout Doors (B)
	No Floor SF
1	Walkout Doors (A)

(10) Floor Support

Joists:
Unsupported Len:
Cntr.Sup:

(11) Heating/Cooling

X	Gas		Oil		Elec.
	Wood		Coal		Steam

	Forced Air w/o Ducts
X	Forced Air w/ Ducts
	Forced Hot Water
	Electric Baseboard
	Elec. Ceil. Radiant
	Radiant (in-floor)
	Electric Wall Heat
	Space Heater
	Wall/Floor Furnace
	Forced Heat & Cool
	Heat Pump
	No Heating/Cooling

	Central Air
	Wood Furnace

(12) Electric

150	Amps Service

No./Qual. of Fixtures

	Ex.	X	Ord.		Min

No. of Elec. Outlets

	Many	X	Ave.		Few

(13) Plumbing

	Average Fixture(s)
1	3 Fixture Bath
	2 Fixture Bath
	Softener, Auto
	Softener, Manual
	Solar Water Heat
	No Plumbing
	Extra Toilet
	Extra Sink
	Separate Shower
	Ceramic Tile Floor
	Ceramic Tile Wains
	Ceramic Tub Alcove
	Vent Fan

(14) Water/Sewer

	Public Water
	Public Sewer
1	Water Well
1	1000 Gal Septic
	2000 Gal Septic

Lump Sum Items:

(15) Built-ins

	Appliance Allow.
	Cook Top
	Dishwasher
	Garbage Disposal
	Bath Heater
	Vent Fan
	Hot Tub
	Unvented Hood
	Vented Hood
	Intercom
	Jacuzzi Tub
	Jacuzzi repl.Tub
	Oven
	Microwave
	Standard Range
	Self Clean Range
	Sauna
	Trash Compactor
	Central Vacuum
	Security System

(15) Fireplaces

	Interior 1 Story
	Interior 2 Story
	2nd/Same Stack
	Two Sided
	Exterior 1 Story
	Exterior 2 Story
	Prefab 1 Story
	Prefab 2 Story
	Heat Circulator
	Raised Hearth
	Wood Stove
	Direct-Vented Gas

Class: D
Effec. Age: 8
Floor Area: 3,784
Total Base New : 372,915 E.C.F.
Total Depr Cost: 343,082 X 1.297
Estimated T.C.V: 444,977

(16) Porches/Decks

Area	Type
704	WPP

(17) Garage

Year Built:
Car Capacity:
Class: D
Exterior: Siding
Brick Ven.: 0
Stone Ven.: 0
Common Wall: 2 Wall
Foundation: 42 Inch
Finished ?:
Auto. Doors: 0
Mech. Doors: 0
Area: 1804
% Good: 0
Storage Area: 0
No Conc. Floor: 0

Bsmnt Garage:

Carport Area:
Roof:

Cost Est. for Res. Bldg: 1 Single Family PLAIN Cls D Blt 0
(11) Heating System: Forced Air w/ Ducts
Ground Area = 1892 SF Floor Area = 3784 SF.
Phy/Ab.Phy/Func/Econ/Comb. % Good=92/100/100/100/92
Building Areas

Stories	Exterior	Foundation	Size	Cost New	Depr. Cost
2 Story	Siding	Slab	1,892		
			Total:	300,413	276,380
Other Additions/Adjustments					
Basement, Outside Entrance, Above Grade			1	1,475	1,357
Water/Sewer					
1000 Gal Septic			1	4,293	3,950
Water Well, 100 Feet			1	5,545	5,101
Garages					
Class: D Exterior: Siding Foundation: 42 Inch (Unfinished)					
Common Wall: 2 Wall			1	-4,652	-4,280
Base Cost			1804	51,847	47,699
Porches					
WPP			704	8,666	7,973
Local Cost Items					
POLE LEANTO DIRT			1440	5,328	4,902
			Totals:	372,915	343,082

Notes:
ECF (RESIDENTIAL) 1.297 => TCV: 444,977

*** Information herein deemed reliable but not guaranteed***

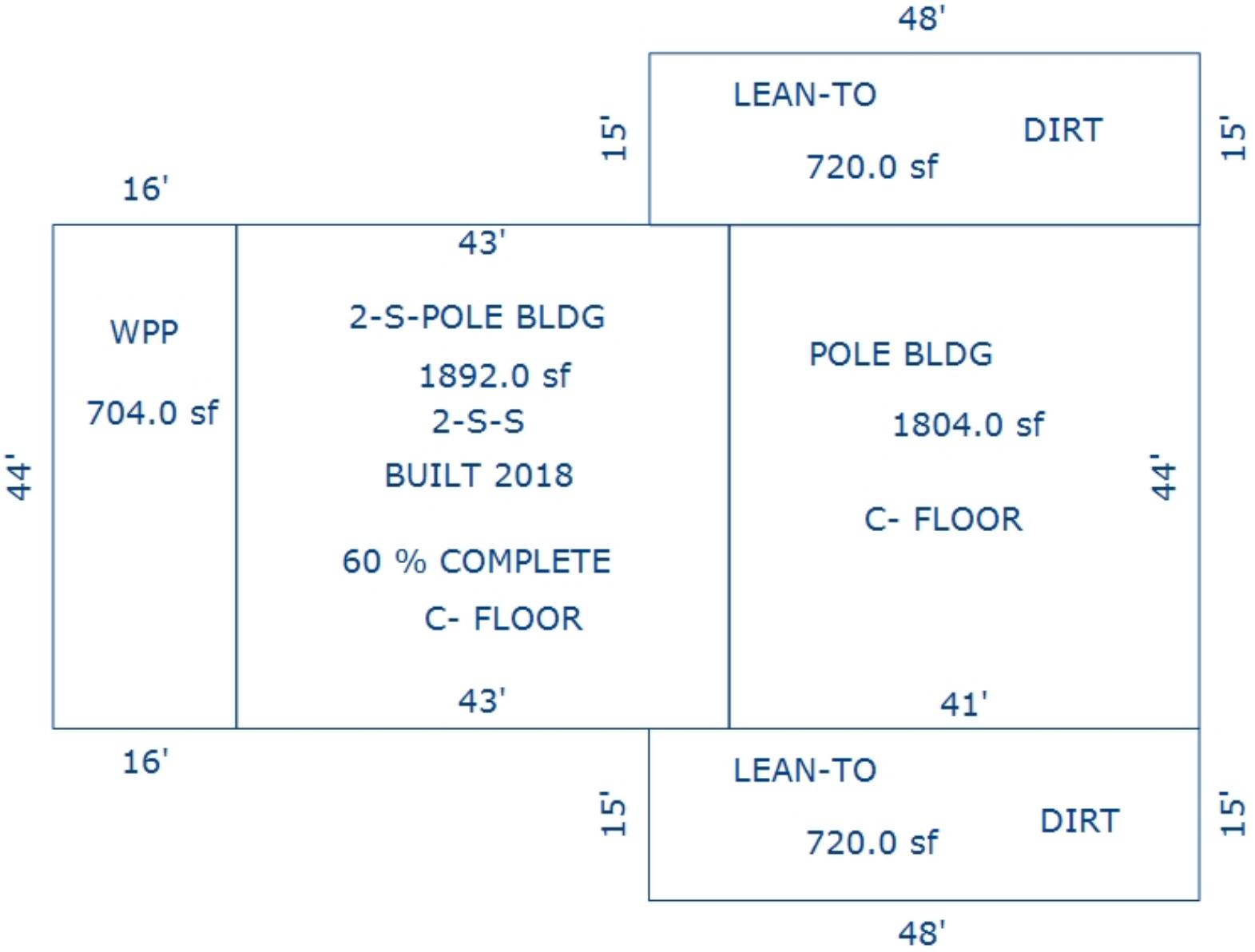

*** Information herein deemed reliable but not guaranteed***

Parcel Number: 2410-05-1301-07 Jurisdiction: GREENWOOD TWP County: WEXFORD Printed on 02/15/2024

Grantor	Grantee	Sale Price	Sale Date	Inst. Type	Terms of Sale	Liber & Page	Verified By	Prcnt. Trans.
ARLT, DONALD & MICHELE	ARLT, JORDAN & LESLIE	10,000	12/02/2020	WD	09-FAMILY	688/2528	AGENT	0.0

Property Address

1931 E 2 1/2 RD

Owner's Name/Address

ARLT, JORDAN & LESLIE
3033 BOWERMAN RD
KINGSLEY MI 49649

Tax Description

PARCEL B; PART OF S 1/2 OF NE DESC AS COM AT E 1/4 COR OF SD SEC; W 219.95 FT TO POB: W 220 FT ; N 500 FT; E 220 FT; S500 FT TO POB 2.52 AC M/L- GW. SEC. 5 T24N R10W -KINGSLEY-
SPLIT ON 11/07/2007 FROM 2410-05-1301;SPLIT ON 12-28-2015 TO 2410-05-1301; 1-4-2016 COMBINED WITH 2410-05-1301-02 & 2410-05-1301-04 SPLIT/COMBINED ON 01/28/2020 FROM 2410-05-1301-01;

Comments/Influences

Split/Comb. on 01/28/2020 completed 01/28/2020 LINDA ;
Parent Parcel(s): 2410-05-1301-01;
Child Parcel(s): 2410-05-1301-06, 2410-05-1301-07, 2410-05-1301-08;

The Equalizer. Copyright (c) 1999 - 2009. Licensed To: Township of Greenwood, County of Wexford, Michigan

Class: RESIDENTIAL-VACANT Zoning:
School: KINGSLEY AREA SCHOOL
P.R.E. 100% 12/12/2022
:
2024 Est TCV 367,086 TCV/TFA: 204.85

Building Permit(s)	Date	Number	Status
Res. New Construction	03/29/2021	PB21-0035	ENTERED

X Improved | Vacant

Public Improvements

- Dirt Road
- Gravel Road
- Paved Road
- Storm Sewer
- Sidewalk
- Water
- Sewer
- Electric
- Gas
- Curb
- Street Lights
- Standard Utilities
- Underground Utils.

Topography of Site

- Level
- Rolling
- Low
- High
- Landscaped
- Swamp
- Wooded
- Pond
- Waterfront
- Ravine
- Wetland
- Flood Plain

Who	When	What
DB	10/23/2023	INSPECTION
GLA	11/01/2021	INSPECTION

Land Value Estimates for Land Table 4010.LAND VALUES

Description	Frontage	Depth	* Factors * Front	Depth	Rate	%Adj.	Reason	Value
ACREAGE			2.353 Acres		5,546	100		13,050
			0.166 Acres		0	100		0
			2.52 Total Acres		Total Est. Land Value =			13,050

Land Improvement Cost Estimates

Description	Rate	Size	% Good	Cash Value
D/W/P: 3.5 Concrete	6.21	110	96	656
D/W/P: 3.5 Concrete	6.21	716	96	4,268
D/W/P: 3.5 Concrete	6.21	88	96	524
Wood Frame	33.90	48	0	0
Total Estimated Land Improvements True Cash Value =				5,448

Year	Land Value	Building Value	Assessed Value	Board of Review	Tribunal/ Other	Taxable Value
2024	6,500	177,000	183,500			154,170C
2023	6,500	70,300	76,800			67,305C
2022	5,300	58,800	64,100		64,100A	64,100S
2021	5,100	0	5,100			5,070C

*** Information herein deemed reliable but not guaranteed***

Building Type

X	Single Family
	Mobile Home
	Town Home
	Duplex
	A-Frame
X	Wood Frame

Building Style: PLAIN

Yr Built	Remodeled
0	0

Condition: Good

Room List

	Basement
	1st Floor
	2nd Floor
	Bedrooms

(1) Exterior

	Wood/Shingle
X	Aluminum/Vinyl
	Brick
X	Insulation

(2) Windows

	Many		Large
X	Avg.	X	Avg.
	Few		Small

	Wood Sash
	Metal Sash
X	Vinyl Sash
	Double Hung
	Horiz. Slide
	Casement
	Double Glass
	Patio Doors
X	Storms & Screens

(3) Roof

X	Gable		Gambrel
	Hip		Mansard
	Flat		Shed

X	Asphalt Shingle

Chimney:

(3) Roof (cont.)

	Eavestrough
X	Insulation
0	Front Overhang
0	Other Overhang

(4) Interior

X	Drywall		Plaster
	Paneled		Wood T&G

Trim & Decoration

	Ex	X	Ord		Min

Size of Closets

	Lg	X	Ord		Small

Doors:		Solid	X	H.C.	

(5) Floors

Kitchen:
Other: Linoleum
Other: Carpeted

(6) Ceilings

X	Drywall

(7) Excavation

Basement: 0 S.F.
Crawl: 1792 S.F.
Slab: 0 S.F.
Height to Joists: 0.0

(8) Basement

	Conc. Block
	Poured Conc.
	Stone
	Treated Wood
	Concrete Floor

(9) Basement Finish

	Recreation SF
	Living SF
	Walkout Doors (B)
	No Floor SF
	Walkout Doors (A)

(10) Floor Support

Joists:
Unsupported Len:
Cntr.Sup:

(11) Heating/Cooling

X	Gas		Oil		Elec.
	Wood		Coal		Steam

	Forced Air w/o Ducts
X	Forced Air w/ Ducts
	Forced Hot Water
	Electric Baseboard
	Elec. Ceil. Radiant
	Radiant (in-floor)
	Electric Wall Heat
	Space Heater
	Wall/Floor Furnace
	Forced Heat & Cool
	Heat Pump
	No Heating/Cooling

X	Central Air
	Wood Furnace

(12) Electric

150	Amps Service

No./Qual. of Fixtures

	Ex.	X	Ord.		Min

No. of Elec. Outlets

	Many	X	Ave.		Few

(13) Plumbing

	Average Fixture(s)
1	3 Fixture Bath
	2 Fixture Bath
	Softener, Auto
	Softener, Manual
	Solar Water Heat
	No Plumbing
	Extra Toilet
	Extra Sink
	Separate Shower
	Ceramic Tile Floor
	Ceramic Tile Wains
	Ceramic Tub Alcove
	Vent Fan

(14) Water/Sewer

	Public Water
	Public Sewer
1	Water Well
1	1000 Gal Septic
	2000 Gal Septic

Lump Sum Items:

(15) Built-ins

	Appliance Allow.
	Cook Top
	Dishwasher
	Garbage Disposal
	Bath Heater
	Vent Fan
	Hot Tub
	Unvented Hood
	Vented Hood
	Intercom
	Jacuzzi Tub
	Jacuzzi repl.Tub
	Oven
	Microwave
	Standard Range
	Self Clean Range
	Sauna
	Trash Compactor
	Central Vacuum
	Security System

(15) Fireplaces

	Interior 1 Story
	Interior 2 Story
	2nd/Same Stack
	Two Sided
	Exterior 1 Story
	Exterior 2 Story
	Prefab 1 Story
	Prefab 2 Story
	Heat Circulator
	Raised Hearth
	Wood Stove
	Direct-Vented Gas

Class: CD
Effec. Age: 3
Floor Area: 1,792
Total Base New : 277,075 E.C.F.
Total Depr Cost: 268,765 X 1.297
Estimated T.C.V: 348,588

(16) Porches/Decks

Area	Type
40	CCP (1 Story)
200	WPP

(17) Garage

Year Built:
Car Capacity:
Class: CD
Exterior: Siding
Brick Ven.: 0
Stone Ven.: 0
Common Wall: 1/2 Wal
Foundation: 42 Inch
Finished ?:
Auto. Doors: 0
Mech. Doors: 0
Area: 840
% Good: 0
Storage Area: 0
No Conc. Floor: 0

Bsmnt Garage:

Carport Area:
Roof:

Cost Est. for Res. Bldg: 1 Single Family PLAIN Cls CD Blt 0
(11) Heating System: Forced Air w/ Ducts , Air Conditioning
Ground Area = 1792 SF Floor Area = 1792 SF.
Phy/Ab.Phy/Func/Econ/Comb. % Good=97/100/100/100/97
Building Areas

Stories	Exterior	Foundation	Size	Cost New	Depr. Cost
1 Story	Siding	Crawl Space	1,792		
			Total:	210,473	204,159
Other Additions/Adjustments					
Water/Sewer					
1000 Gal Septic			1	4,582	4,445
Water Well, 100 Feet			1	5,680	5,510
Porches					
CCP (1 Story)			40	1,169	1,134
WPP			200	4,082	3,960
Garages					
Class: CD Exterior: Siding Foundation: 42 Inch (Unfinished)					
Base Cost			840	29,274	28,396
Common Wall: 1/2 Wall			1	-1,261	-1,223
Class: D Exterior: Pole (Unfinished)					
Base Cost			1200	23,076	22,384
			Totals:	277,075	268,765

Notes:

ECF (RESIDENTIAL) 1.297 => TCV: 348,588

*** Information herein deemed reliable but not guaranteed***

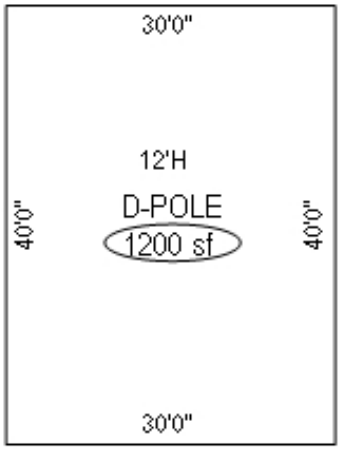

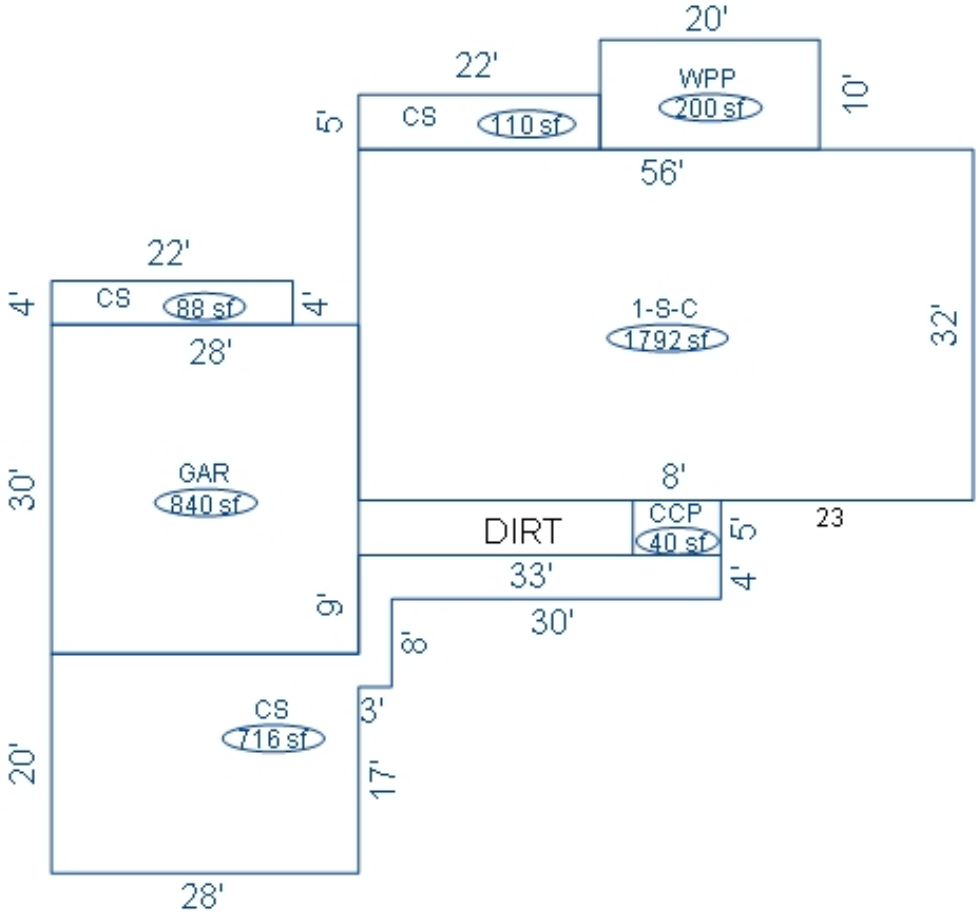

*** Information herein deemed reliable but not guaranteed***

Parcel Number: 2410-05-1301-08 Jurisdiction: GREENWOOD TWP County: WEXFORD Printed on 02/15/2024

Grantor	Grantee	Sale Price	Sale Date	Inst. Type	Terms of Sale	Liber & Page	Verified By	Prcnt. Trans.
ARLT, JORDAN & LESLIE		8,500	07/25/2022	QC	16-LC PAYOFF	693/1625	DEED	0.0
ARLT, DONALD & MICHELE	ARLT, JORDAN & LESLIE	8,500	09/26/2019	LC	09-FAMILY	685 /2787	DEED	0.0

Property Address

E 2 1/2 RD

Owner's Name/Address

ARLT, JORDAN & LESLIE
3033 BOWERMAN RD
KINGSLEY MI 49649

Tax Description

PARCEL C: PART OF S 1/2 OF NE 1/4 DESC AS COM AT E 1/4 COR OF SD SEC; W439.95FT TO POB: W 220 FT; N 500 FT; E 220 FT; S 500 FT TO POB. 2.52 AC M/L
-- GW. SEC. 5 T24N R10W -KINGSLEY- SPLIT ON 11/07/2007 FROM 2410-05-1301;SPLIT ON 12-28-2015 TO 2410-05-1301; 1-4-2016 COMBINED WITH 2410-05-1301-02 & 2410-05-1301-04
SPLIT/COMBINED ON 01/28/2020 FROM 2410-05-1301-01;

Comments/Influences

Split/Comb. on 01/28/2020 completed 01/28/2020 LINDA ;
Parent Parcel(s): 2410-05-1301-01;
Child Parcel(s): 2410-05-1301-06, 2410-05-1301-07, 2410-05-1301-08;

The Equalizer. Copyright (c) 1999 - 2009. Licensed To: Township of Greenwood, County of Wexford, Michigan

Class: RESIDENTIAL-VACANT Zoning:
School: KINGSLEY AREA SCHOOL
P.R.E. 100% 02/07/2023
:
2024 Est TCV 13,050

Building Permit(s)	Date	Number	Status

	Improved	X	Vacant

Public Improvements

- Dirt Road
- Gravel Road
- Paved Road
- Storm Sewer
- Sidewalk
- Water
- Sewer
- Electric
- Gas
- Curb
- Street Lights
- Standard Utilities
- Underground Utils.

Topography of Site

- Level
- Rolling
- Low
- High
- Landscaped
- Swamp
- Wooded
- Pond
- Waterfront
- Ravine
- Wetland
- Flood Plain

Who	When	What
GLA	10/31/2022	INSPECTION

Land Value Estimates for Land Table 4010.LAND VALUES

Description	Frontage	Depth	* Factors * Front	Depth	Rate	%Adj.	Reason	Value
ACREAGE			2.353 Acres		5,546	100		13,050
			0.166 Acres		0	100		0
			2.52 Total Acres		Total Est. Land Value =			13,050

Year	Land Value	Building Value	Assessed Value	Board of Review	Tribunal/ Other	Taxable Value
2024	6,500	0	6,500			5,772C
2023	6,500	0	6,500			5,498C
2022	5,300	0	5,300			5,237C
2021	5,100	0	5,100			5,070C

*** Information herein deemed reliable but not guaranteed***

Parcel Number: 2410-05-1401 Jurisdiction: GREENWOOD TWP County: WEXFORD Printed on 02/15/2024

Grantor	Grantee	Sale Price	Sale Date	Inst. Type	Terms of Sale	Liber & Page	Verified By	Prcnt. Trans.
ARLT, DONALD & CAROLYN	BOGART, JAKOB & JO ANN	43,000	11/12/2003	WD	03-ARM'S LENGTH	525:645	DEED	0.0

Property Address
1801 E 2 1/2 RD

Owner's Name/Address
BOGART, JAKOB
& JO ANN
1801 E 2 1/2 RD
KINGSLEY MI 49649

Tax Description
SW 1/4 OF SE 1/4 OF NE 1/4 --10 A M/L-- GW SEC 5 T24N R10W -KINGSLEY- [[ASSESSED W/ 05-1301 '03

Comments/Influences

Class: RESIDENTIAL-IMPROV Zoning:
School: KINGSLEY AREA SCHOOL
P.R.E. 100% / /
:
2024 Est TCV 354,724 TCV/TFA: 187.59

Building Permit(s)	Date	Number	Status
RESIDENTIAL - REMODEL	11/05/2004	PM8090	
RESIDENTIAL - REMODEL	09/27/2004	PP3633	
RESIDENTIAL - NEW	09/20/2004	PB12453	
RESIDENTIAL - REMODEL	09/14/2004	PE16441	

X Improved | Vacant

	Public Improvements
	Dirt Road
X	Gravel Road
	Paved Road
	Storm Sewer
	Sidewalk
	Water
	Sewer
X	Electric
	Gas
	Curb
	Street Lights
	Standard Utilities
	Underground Utils.

	Topography of Site
	Level
X	Rolling
	Low
	High
	Landscaped
	Swamp
	Wooded
	Pond
	Waterfront
	Ravine
	Wetland
	Flood Plain
X	OPEN

Who	When	What
GLA	10/31/2022	INSPECTION
GLA	09/30/2015	INSPECTION

Land Value Estimates for Land Table 4010.LAND VALUES

Description	Frontage	Depth	* Factors * Front	Depth	Rate	%Adj.	Reason	Value
ACREAGE			9.500 Acres		4,694	100		44,589
ROW			0.500 Acres		0	100		0
			10.00 Total Acres		Total Est. Land Value =			44,589

Land Improvement Cost Estimates

Description	Rate	Size	% Good	Cash Value
Wood Frame	28.20	120	43	1,455
Wood Frame	25.17	192	43	2,078
Total Estimated Land Improvements True Cash Value =				3,533

Year	Land Value	Building Value	Assessed Value	Board of Review	Tribunal/ Other	Taxable Value
2024	22,300	155,100	177,400			92,770C
2023	12,800	126,800	139,600			88,353C
2022	11,800	107,100	118,900			84,146C
2021	12,000	108,400	120,400			81,458C

The Equalizer. Copyright (c) 1999 - 2009. Licensed To: Township of Greenwood, County of Wexford, Michigan

*** Information herein deemed reliable but not guaranteed***

Building Type

X	Single Family
	Mobile Home
	Town Home
	Duplex
	A-Frame
X	Wood Frame

Building Style: FARMHOUSE

Yr Built	Remodeled
2004	0

Condition: Good

Room List

	Basement
	1st Floor
	2nd Floor
	Bedrooms

(1) Exterior

	Wood/Shingle
X	Aluminum/Vinyl
	Brick
X	Insulation

(2) Windows

X	Many Avg. Few		Large Avg. Small

	Wood Sash
	Metal Sash
X	Vinyl Sash
	Double Hung
	Horiz. Slide
	Casement
	Double Glass
	Patio Doors
X	Storms & Screens

(3) Roof

X	Gable		Gambrel
	Hip		Mansard
	Flat		Shed

X	Asphalt Shingle

Chimney:

(3) Roof (cont.)

	Eavestrough
X	Insulation
0	Front Overhang
0	Other Overhang

(4) Interior

X	Drywall		Plaster
	Paneled		Wood T&G

Trim & Decoration

	Ex	X	Ord		Min

Size of Closets

	Lg	X	Ord		Small

Doors:		Solid	X	H.C.	

(5) Floors

Kitchen:
Other: Linoleum
Other: Carpeted

(6) Ceilings

X	Drywall

(7) Excavation

Basement: 1696 S.F.
Crawl: 0 S.F.
Slab: 0 S.F.
Height to Joists: 0.0

(8) Basement

	Conc. Block
	Poured Conc.
	Stone
	Treated Wood
	Concrete Floor

(9) Basement Finish

	Recreation	SF
	Living	SF
1	Walkout Doors	(B)
	No Floor	SF
	Walkout Doors	(A)

(10) Floor Support

Joists:
Unsupported Len:
Cntr.Sup:

(11) Heating/Cooling

X	Gas		Oil		Elec.
	Wood		Coal		Steam

	Forced Air w/o Ducts
X	Forced Air w/ Ducts
	Forced Hot Water
	Electric Baseboard
	Elec. Ceil. Radiant
	Radiant (in-floor)
	Electric Wall Heat
	Space Heater
	Wall/Floor Furnace
	Forced Heat & Cool
	Heat Pump
	No Heating/Cooling
	Central Air
	Wood Furnace

(12) Electric

150	Amps Service

No./Qual. of Fixtures

	Ex.	X	Ord.		Min

No. of Elec. Outlets

	Many	X	Ave.		Few

(13) Plumbing

2	Average Fixture(s)
	3 Fixture Bath
	2 Fixture Bath
	Softener, Auto
	Softener, Manual
	Solar Water Heat
	No Plumbing
	Extra Toilet
	Extra Sink
	Separate Shower
	Ceramic Tile Floor
	Ceramic Tile Wains
	Ceramic Tub Alcove
	Vent Fan

(14) Water/Sewer

	Public Water
	Public Sewer
1	Water Well
1	1000 Gal Septic
	2000 Gal Septic

Lump Sum Items:

(15) Built-ins

	Appliance Allow.
	Cook Top
	Dishwasher
	Garbage Disposal
	Bath Heater
	Vent Fan
	Hot Tub
	Unvented Hood
	Vented Hood
	Intercom
	Jacuzzi Tub
	Jacuzzi repl.Tub
	Oven
	Microwave
	Standard Range
	Self Clean Range
	Sauna
	Trash Compactor
	Central Vacuum
	Security System

(15) Fireplaces

	Interior 1 Story
	Interior 2 Story
	2nd/Same Stack
	Two Sided
	Exterior 1 Story
	Exterior 2 Story
	Prefab 1 Story
	Prefab 2 Story
	Heat Circulator
	Raised Hearth
	Wood Stove
	Direct-Vented Gas

Class: CD
Effec. Age: 20
Floor Area: 1,891
Total Base New : 295,489 E.C.F.
Total Depr Cost: 236,393 X 1.297
Estimated T.C.V: 306,602

(16) Porches/Decks

Area	Type
208	WGEP (1 Story)
48	CCP (1 Story)
112	Brzwy, FW

(17) Garage

Year Built:
Car Capacity:
Class: CD
Exterior: Siding
Brick Ven.: 0
Stone Ven.: 0
Common Wall: 1/2 Wal
Foundation: 42 Inch
Finished ?:
Auto. Doors: 0
Mech. Doors: 0
Area: 840
% Good: 0
Storage Area: 0
No Conc. Floor: 0

Bsmnt Garage:

Carport Area:
Roof:

Cost Est. for Res. Bldg: 1 Single Family FARMHOUSE Cls CD Blt 2004
(11) Heating System: Forced Air w/ Ducts
Ground Area = 1696 SF Floor Area = 1891 SF.
Phy/Ab.Phy/Func/Econ/Comb. % Good=80/100/100/100/80
Building Areas

Stories	Exterior	Foundation	Size	Cost New	Depr. Cost
1.25 Story	Siding	Basement	780		
1 Story	Siding	Basement	916		
			Total:	223,778	179,024
Other Additions/Adjustments					
Basement, Outside Entrance, Below Grade			1	2,176	1,741
Plumbing					
3 Fixture Bath			1	3,887	3,110
Water/Sewer					
1000 Gal Septic			1	4,582	3,666
Water Well, 100 Feet			1	5,680	4,544
Porches					
WGEP (1 Story)			208	14,265	11,412
CCP (1 Story)			48	1,345	1,076
Garages					
Class: CD Exterior: Siding Foundation: 42 Inch (Unfinished)					
Base Cost			840	29,274	23,419
Common Wall: 1/2 Wall			1	-1,261	-1,009
Breezeways					
Frame Wall			112	6,763	5,410
Local Cost Items					
OUTSIDE FURNACE			1	5,000	4,000
			Totals:	295,489	236,393

Notes:
ECF (RESIDENTIAL) 1.297 => TCV: 306,602

*** Information herein deemed reliable but not guaranteed***

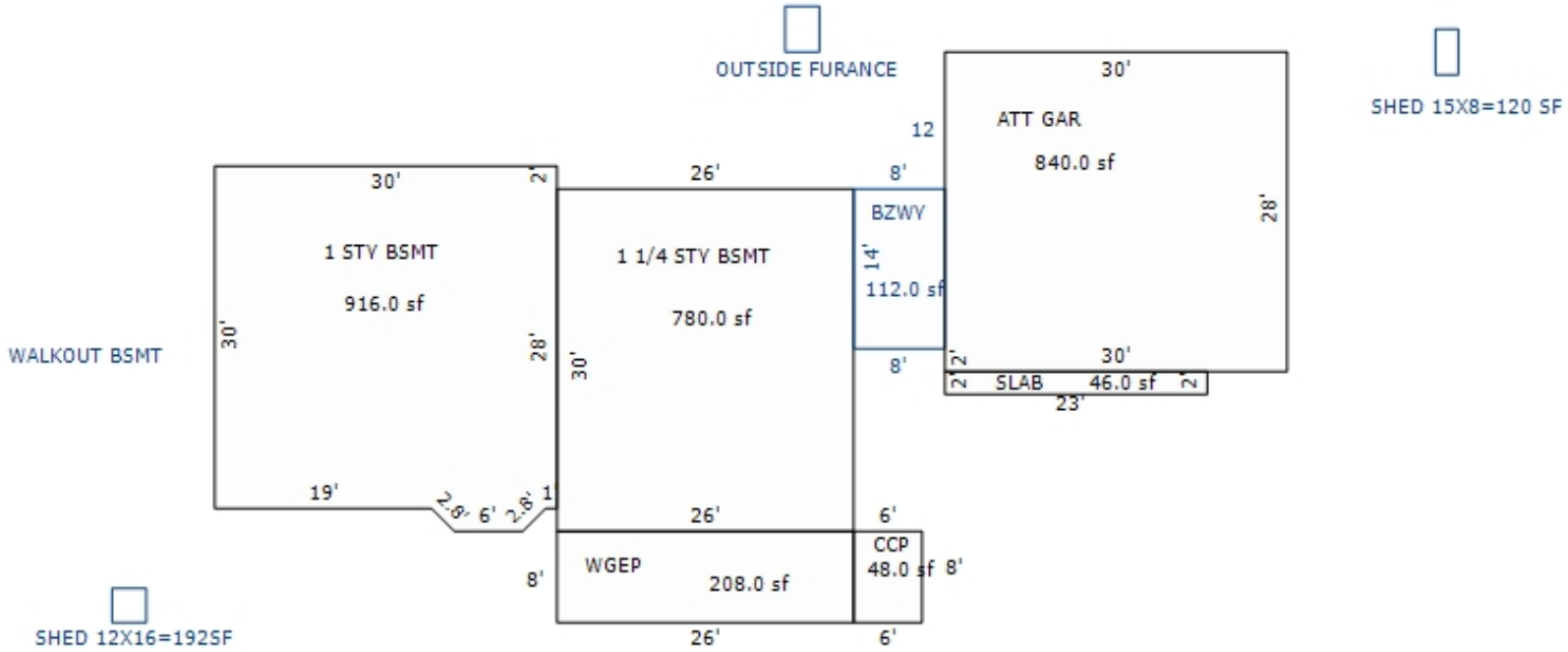

*** Information herein deemed reliable but not guaranteed***

Parcel Number: 2410-05-2101 Jurisdiction: GREENWOOD TWP County: WEXFORD Printed on 02/15/2024

Grantor	Grantee	Sale Price	Sale Date	Inst. Type	Terms of Sale	Liber & Page	Verified By	Prcnt. Trans.
HULETT, TOM B & MELISSA A	HULETT TOM B	0	12/27/2013	QC	06-COURT JUDGEMENT	665;410-413	DEED	0.0

Property Address

1424 E COUNTY LINE RD

Owner's Name/Address

HULETT, TOM BRYON
1424 E COUNTY LINE RD
KINGSLEY MI 49649

Tax Description

COM AT NW COR OF SEC; E 1963.4 FT TO POB: E 534.35 FT; S 1604.76 FT; E 121 FT; S 1324.48 FT; W 668.44 FT; N 2926.41 FT TO POB. --40.01 A M/L-- GW SEC 5 T24N R10W -KINGSLEY- [[ASSESSED W/ 05-1202 '01

Comments/Influences

Class: RESIDENTIAL-IMPROV Zoning:

School: KINGSLEY AREA SCHOOL

P.R.E. 100% / /

:

2024 Est TCV 222,479 TCV/TFA: 170.87

Building Permit(s)	Date	Number	Status
RESIDENTIAL - REMODEL	10/02/2001	PB10609	

X	Improved		Vacant

	Public Improvements
	Dirt Road
	Gravel Road
X	Paved Road
	Storm Sewer
	Sidewalk
	Water
	Sewer
X	Electric
	Gas
	Curb
	Street Lights
	Standard Utilities
	Underground Utils.

	Topography of Site
	Level
X	Rolling
	Low
	High
	Landscaped
	Swamp
	Wooded
	Pond
	Waterfront
	Ravine
	Wetland
	Flood Plain
X	OPEN

Who	When	What
GLA	10/31/2022	INSPECTION
GLA	09/09/2015	INSPECTION

Land Value Estimates for Land Table 4010.LAND VALUES

Description	Frontage	Depth	* Factors * Front	Depth	Rate	%Adj.	Reason	Value
ACREAGE			39.605 Acres		2,722	100		107,805
ROW			0.405 Acres		0	100		0
			40.01 Total Acres		Total Est. Land Value =			107,805

Year	Land Value	Building Value	Assessed Value	Board of Review	Tribunal/ Other	Taxable Value
2024	53,900	57,300	111,200			25,759C
2023	47,600	46,100	93,700			24,533C
2022	37,700	38,500	76,200			23,365C
2021	33,700	38,400	72,100			22,619C

The Equalizer. Copyright (c) 1999 - 2009. Licensed To: Township of Greenwood, County of Wexford, Michigan

*** Information herein deemed reliable but not guaranteed***

Building Type

X	Single Family
	Mobile Home
	Town Home
	Duplex
	A-Frame
X	Wood Frame

Building Style: FARMHOUSE

Yr Built	Remodeled
0	0

Condition: Good

Room List

	Basement
	1st Floor
	2nd Floor
	Bedrooms

(1) Exterior

	Wood/Shingle
X	Aluminum/Vinyl
	Brick
X	Insulation

(2) Windows

X	Many Avg. Few	X	Large Avg. Small

	Wood Sash
	Metal Sash
X	Vinyl Sash
	Double Hung
	Horiz. Slide
	Casement
	Double Glass
	Patio Doors
X	Storms & Screens

(3) Roof

X	Gable		Gambrel
	Hip		Mansard
	Flat		Shed

X	Asphalt Shingle

Chimney:

(3) Roof (cont.)

	Eavestrough
X	Insulation
0	Front Overhang
0	Other Overhang

(4) Interior

X	Drywall Paneled		Plaster Wood T&G

Trim & Decoration

	Ex	X	Ord		Min

Size of Closets

	Lg	X	Ord		Small

Doors: | | Solid | X | H.C.

(5) Floors

Kitchen:
Other: Linoleum
Other: Carpeted

(6) Ceilings

X	Drywall

(7) Excavation

Basement: 0 S.F.
Crawl: 834 S.F.
Slab: 0 S.F.
Height to Joists: 0.0

(8) Basement

	Conc. Block
	Poured Conc.
	Stone
	Treated Wood
	Concrete Floor

(9) Basement Finish

	Recreation SF
	Living SF
	Walkout Doors (B)
	No Floor SF
	Walkout Doors (A)

(10) Floor Support

Joists:
Unsupported Len:
Cntr.Sup:

(11) Heating/Cooling

X	Gas		Oil		Elec.
	Wood		Coal		Steam

	Forced Air w/o Ducts
X	Forced Air w/ Ducts
	Forced Hot Water
	Electric Baseboard
	Elec. Ceil. Radiant
	Radiant (in-floor)
	Electric Wall Heat
	Space Heater
	Wall/Floor Furnace
	Forced Heat & Cool
	Heat Pump
	No Heating/Cooling

	Central Air
	Wood Furnace

(12) Electric

150	Amps Service

No./Qual. of Fixtures

	Ex.	X	Ord.		Min

No. of Elec. Outlets

	Many	X	Ave.		Few

(13) Plumbing

1	Average Fixture(s)
	3 Fixture Bath
	2 Fixture Bath
	Softener, Auto
	Softener, Manual
	Solar Water Heat
	No Plumbing
	Extra Toilet
	Extra Sink
	Separate Shower
	Ceramic Tile Floor
	Ceramic Tile Wains
	Ceramic Tub Alcove
	Vent Fan

(14) Water/Sewer

	Public Water
	Public Sewer
1	Water Well
1	1000 Gal Septic
	2000 Gal Septic

Lump Sum Items:

(15) Built-ins

	Appliance Allow.
	Cook Top
	Dishwasher
	Garbage Disposal
	Bath Heater
	Vent Fan
	Hot Tub
	Unvented Hood
	Vented Hood
	Intercom
	Jacuzzi Tub
	Jacuzzi repl.Tub
	Oven
	Microwave
	Standard Range
	Self Clean Range
	Sauna
	Trash Compactor
	Central Vacuum
	Security System

(15) Fireplaces

	Interior 1 Story
	Interior 2 Story
	2nd/Same Stack
	Two Sided
	Exterior 1 Story
	Exterior 2 Story
	Prefab 1 Story
	Prefab 2 Story
	Heat Circulator
	Raised Hearth
	Wood Stove
	Direct-Vented Gas

Class: CD
Effec. Age: 60
Floor Area: 1,302
Total Base New : 196,484 E.C.F.
Total Depr Cost: 88,415 X 1.297
Estimated T.C.V: 114,674

(16) Porches/Decks

Area	Type
208	WGEP (1 Story)
168	WPP
224	WPP

(17) Garage

Year Built:
Car Capacity:
Class: CD
Exterior: Pole
Brick Ven.: 0
Stone Ven.: 0
Common Wall: Detache
Foundation: 18 Inch
Finished ?:
Auto. Doors: 0
Mech. Doors: 0
Area: 1200
% Good: 0
Storage Area: 0
No Conc. Floor: 0

Bsmnt Garage:

Carport Area:
Roof:

Cost Est. for Res. Bldg: 1 Single Family FARMHOUSE Cls CD Blt 0
(11) Heating System: Forced Air w/ Ducts
Ground Area = 834 SF Floor Area = 1302 SF.
Phy/Ab.Phy/Func/Econ/Comb. % Good=45/100/100/100/45
Building Areas

Stories	Exterior	Foundation	Size	Cost New	Depr. Cost
1.75 Story	Siding	Crawl Space	624		
1 Story	Siding	Crawl Space	210		
			Total:	137,855	62,033
Other Additions/Adjustments					
Water/Sewer					
1000 Gal Septic			1	4,582	2,062
Water Well, 100 Feet			1	5,680	2,556
Porches					
WGEP (1 Story)			208	14,265	6,419
WPP			168	3,721	1,674
WPP			224	4,281	1,926
Garages					
Class: CD Exterior: Pole (Unfinished)					
Base Cost			1200	26,100	11,745
			Totals:	196,484	88,415

Notes:
ECF (RESIDENTIAL) 1.297 => TCV: 114,674

*** Information herein deemed reliable but not guaranteed***

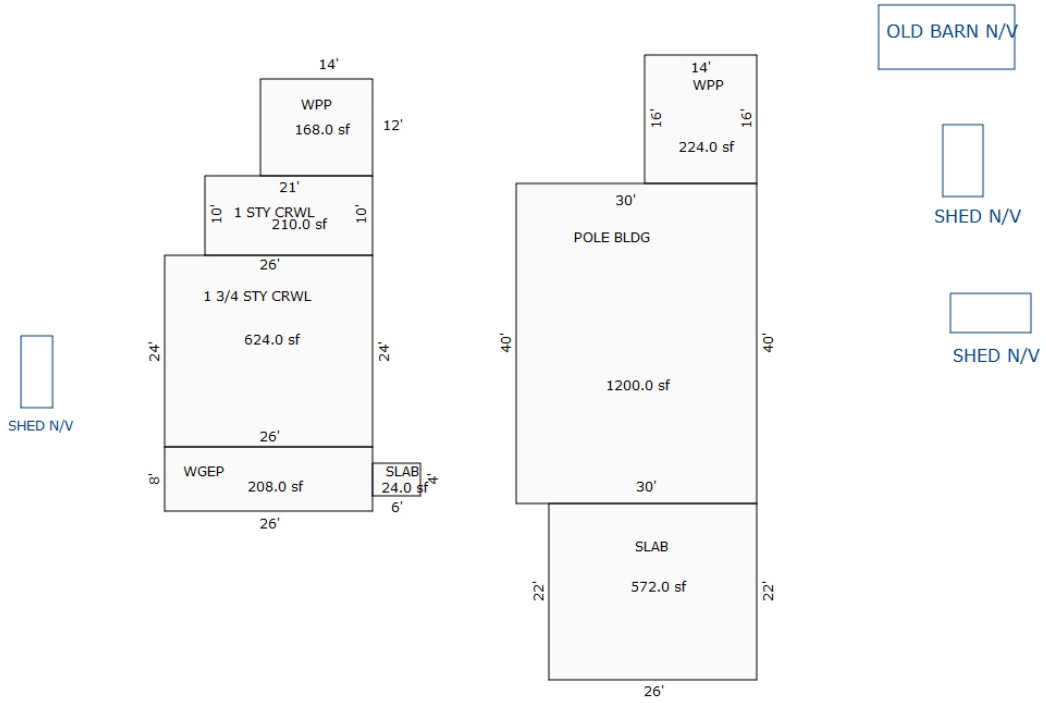

Sketch by Apex Sketch

*** Information herein deemed reliable but not guaranteed***

Parcel Number: 2410-05-2102-01 Jurisdiction: GREENWOOD TWP County: WEXFORD Printed on 02/15/2024

Grantor	Grantee	Sale Price	Sale Date	Inst. Type	Terms of Sale	Liber & Page	Verified By	Prcnt. Trans.

Property Address

Owner's Name/Address
JACKSON, MARK A. TRUST 4020 WAERVIEW DR GRAWN MI 49637

Tax Description
COM AT NW COR: E 676 FT; S 800 FT; E 300 FT; N 800 FT; E 987.425 FT; S TO 1/4-LINE; S 500 FT; E 200 FT; S 400 FT; W 824.27 FT; S TO SEC LINE; W TO SW COR; N TO BEG EXC COM AT SE COR OF SAID PAR: W 300 FT; N 300 FT; E 300 FT; S TO BEG. --218.37 A M/L-- GW SEC. 5 T24N R10W -KINGSLEY- SPLIT ON 02/10/2009 FROM 2410-05-2102;

Comments/Influences
SPLIT/COMB. ON 02/10/2009 COMPLETED 3/06/2009 DEB OWNER REQUEST ; PARENT PARCEL(S): 2410-05-2102; CHILD PARCEL(S): 2410-05-2102-01, 2410-05-2102-02; ----------

The Equalizer. Copyright (c) 1999 - 2009.
Licensed To: Township of Greenwood, County of Wexford, Michigan

Class: RESIDENTIAL-VACANT Zoning:

School: KINGSLEY AREA SCHOOL

P.R.E. 100% 12/09/2008 Qual. Fr. PA 42

:

2024 Est TCV 538,433

Building Permit(s)	Date	Number	Status

	Improved	X	Vacant

	Public Improvements
	Dirt Road
	Gravel Road
X	Paved Road
	Storm Sewer
	Sidewalk
	Water
	Sewer
X	Electric
	Gas
	Curb
	Street Lights
	Standard Utilities
	Underground Utils.

	Topography of Site
	Level
X	Rolling
X	Low
	High
	Landscaped
	Swamp
X	Wooded
X	Pond
	Waterfront
	Ravine
	Wetland
	Flood Plain
X	OPEN

Who	When	What
GLA	10/31/2022	INSPECTION
GLA	06/09/2015	INSPECTED

Land Value Estimates for Land Table 4010.LAND VALUES

Description	Frontage	Depth	* Factors * Front	Depth	Rate	%Adj.	Reason	Value
ACREAGE			217.110 Acres		2,480	100		538,433
ROW			1.260 Acres		0	100		0
			218.37 Total Acres		Total Est. Land Value =			538,433

Year	Land Value	Building Value	Assessed Value	Board of Review	Tribunal/ Other	Taxable Value
2024	269,200	0	269,200			145,363C
2023	206,300	0	206,300			138,441C
2022	184,500	0	184,500			131,849C
2021	162,800	0	162,800			127,637C

*** Information herein deemed reliable but not guaranteed***

Parcel Number: 2410-05-2102-02 Jurisdiction: GREENWOOD TWP County: WEXFORD Printed on 02/15/2024

Grantor	Grantee	Sale Price	Sale Date	Inst. Type	Terms of Sale	Liber & Page	Verified By	Prcnt. Trans.

Property Address	Class: RESIDENTIAL-IMPROV	Zoning:	Building Permit(s)	Date	Number	Status
	School: KINGSLEY AREA SCHOOL					
Owner's Name/Address	P.R.E. 0%					
	:					
JACKSON, MARK A. TRUST 4020 WATERVIEW DR GRAWN MI 49637	2024 Est TCV 526,101 TCV/TFA: 182.17					

Tax Description

COM AT SE COR OF SW 1/4 OF SW 1/4; W 300 FT; N 300 FT; E 300 FT; S TO POB.-2.07 A M/L-- GW SEC. 5 T24N R10W -KINGSLEY-
SPLIT ON 02/10/2009 FROM 2410-05-2102;

Comments/Influences

SPLIT/COMB. ON 02/10/2009 COMPLETED 3 /06/2009 DEB OWNER REQUEST ;
PARENT PARCEL(S): 2410-05-2102;
CHILD PARCEL(S): 2410-05-2102-01, 2410-05-2102-02;

	Improved	Vacant
	X	

	Public Improvements
	Dirt Road
	Gravel Road
X	Paved Road
	Storm Sewer
	Sidewalk
	Water
	Sewer
	Electric
	Gas
	Curb
	Street Lights
	Standard Utilities
	Underground Utils.

	Topography of Site
	Level
X	Rolling
	Low
	High
	Landscaped
	Swamp
X	Wooded
	Pond
	Waterfront
	Ravine
	Wetland
	Flood Plain
X	OPEN

Who	When	What
GLA	10/31/2022	INSPECTION
GLA	06/09/2015	INSPECTION

Land Value Estimates for Land Table 4010.LAND VALUES

Description	Frontage	Depth	* Factors * Front	Depth	Rate	%Adj.	Reason	Value
ACREAGE			2.070 Acres		5,546	100		11,480
			2.07 Total Acres		Total Est. Land Value =			11,480

Land Improvement Cost Estimates

Description	Rate	Size	% Good	Cash Value
D/W/P: Asphalt Paving	2.71	53780	48	69,957
D/W/P: 4in Concrete	6.11	230	48	674
D/W/P: 4in Concrete	6.11	190	48	557
D/W/P: 4in Concrete	6.11	40	48	117
Total Estimated Land Improvements True Cash Value =				71,305

Year	Land Value	Building Value	Assessed Value	Board of Review	Tribunal/ Other	Taxable Value
2024	5,700	257,400	263,100			58,082C
2023	5,700	214,700	220,400			55,317C
2022	4,700	183,700	188,400			52,683C
2021	4,900	183,800	188,700			51,000C

The Equalizer. Copyright (c) 1999 - 2009.
Licensed To: Township of Greenwood, County of Wexford, Michigan

*** Information herein deemed reliable but not guaranteed***

Building Type

X	Single Family
	Mobile Home
	Town Home
	Duplex
	A-Frame
X	Wood Frame

Building Style: PLAIN

Yr Built	Remodeled
1995	0

Condition: Average

Room List

	Basement
	1st Floor
	2nd Floor
	Bedrooms

(1) Exterior

X	Wood/Shingle
	Aluminum/Vinyl
	Brick
	Insulation

(2) Windows

X	Many		Large
	Avg.	X	Avg.
	Few		Small

	Wood Sash
	Metal Sash
	Vinyl Sash
	Double Hung
	Horiz. Slide
	Casement
	Double Glass
	Patio Doors
	Storms & Screens

(3) Roof

X	Gable		Gambrel
	Hip		Mansard
	Flat		Shed
X	Asphalt Shingle		

Chimney: Brick

(3) Roof (cont.)

	Eavestrough
	Insulation
0	Front Overhang
0	Other Overhang

(4) Interior

	Drywall		Plaster
	Paneled		Wood T&G

Trim & Decoration

	Ex	X	Ord		Min

Size of Closets

	Lg	X	Ord		Small

Doors:		Solid	X	H.C.	

(5) Floors

Kitchen:
Other:
Other:

(6) Ceilings

(7) Excavation

Basement: 2310 S.F.
Crawl: 0 S.F.
Slab: 0 S.F.
Height to Joists: 0.0

(8) Basement

	Conc. Block
	Poured Conc.
	Stone
	Treated Wood
	Concrete Floor

(9) Basement Finish

	Recreation SF
	Living SF
	Walkout Doors (B)
	No Floor SF
	Walkout Doors (A)

(10) Floor Support

Joists:
Unsupported Len:
Cntr.Sup:

(11) Heating/Cooling

X	Gas		Oil		Elec.
	Wood		Coal		Steam

	Forced Air w/o Ducts
X	Forced Air w/ Ducts
	Forced Hot Water
	Electric Baseboard
	Elec. Ceil. Radiant
	Radiant (in-floor)
	Electric Wall Heat
	Space Heater
	Wall/Floor Furnace
	Forced Heat & Cool
	Heat Pump
	No Heating/Cooling
	Central Air
	Wood Furnace

(12) Electric

0	Amps Service

No./Qual. of Fixtures

	Ex.	X	Ord.		Min

No. of Elec. Outlets

	Many	X	Ave.		Few

(13) Plumbing

2	Average Fixture(s)
	3 Fixture Bath
	2 Fixture Bath
	Softener, Auto
	Softener, Manual
	Solar Water Heat
	No Plumbing
	Extra Toilet
	Extra Sink
	Separate Shower
	Ceramic Tile Floor
	Ceramic Tile Wains
	Ceramic Tub Alcove
	Vent Fan

(14) Water/Sewer

	Public Water
	Public Sewer
1	Water Well
1	1000 Gal Septic
	2000 Gal Septic

Lump Sum Items:

(15) Built-ins

	Appliance Allow.
	Cook Top
	Dishwasher
	Garbage Disposal
	Bath Heater
	Vent Fan
	Hot Tub
	Unvented Hood
	Vented Hood
	Intercom
	Jacuzzi Tub
	Jacuzzi repl.Tub
	Oven
	Microwave
	Standard Range
	Self Clean Range
	Sauna
	Trash Compactor
	Central Vacuum
	Security System

(15) Fireplaces

	Interior 1 Story
	Interior 2 Story
	2nd/Same Stack
	Two Sided
	Exterior 1 Story
	Exterior 2 Story
	Prefab 1 Story
	Prefab 2 Story
	Heat Circulator
	Raised Hearth
	Wood Stove
1	Direct-Vented Gas

Class: C
Effec. Age: 28
Floor Area: 2,888
Total Base New : 474,727 E.C.F.
Total Depr Cost: 341,801 X 1.297
Estimated T.C.V: 443,316

(16) Porches/Decks

Area	Type
360	WGEP (1 Story)
31	WPP
224	WGEP (1 Story)
75	WCP (1 Story)

(17) Garage

Year Built:
Car Capacity:
Class: C
Exterior: Siding
Brick Ven.: 0
Stone Ven.: 0
Common Wall: 1 Wall
Foundation: 42 Inch
Finished ?:
Auto. Doors: 0
Mech. Doors: 0
Area: 624
% Good: 0
Storage Area: 0
No Conc. Floor: 0

Bsmnt Garage:

Carport Area:
Roof:

Cost Est. for Res. Bldg: 1 Single Family PLAIN Cls C Blt 1995
(11) Heating System: Forced Air w/ Ducts
Ground Area = 2310 SF Floor Area = 2888 SF.
Phy/Ab.Phy/Func/Econ/Comb. % Good=72/100/100/100/72
Building Areas

Stories	Exterior	Foundation	Size	Cost New	Depr. Cost
1.25 Story	Siding	Basement	2,310		
			Total:	353,810	254,742
Other Additions/Adjustments					
Plumbing					
3 Fixture Bath			1	4,678	3,368
Water/Sewer					
1000 Gal Septic			1	4,899	3,527
Water Well, 100 Feet			1	5,849	4,211
Porches					
WGEP (1 Story)			360	23,864	17,182
WPP			31	1,604	1,155
WGEP (1 Story)			224	16,511	11,888
WCP (1 Story)			75	4,114	2,962
Garages					
Class: C Exterior: Siding Foundation: 42 Inch (Unfinished)					
Base Cost			624	26,401	19,009
Common Wall: 1 Wall			1	-2,705	-1,948
Class: C Exterior: Siding Foundation: 18 Inch (Unfinished)					
Base Cost			960	32,659	23,514
Fireplaces					
Direct-Vented Gas			1	3,043	2,191
			Totals:	474,727	341,801

Notes:
ECF (RESIDENTIAL) 1.297 => TCV: 443,316

*** Information herein deemed reliable but not guaranteed***

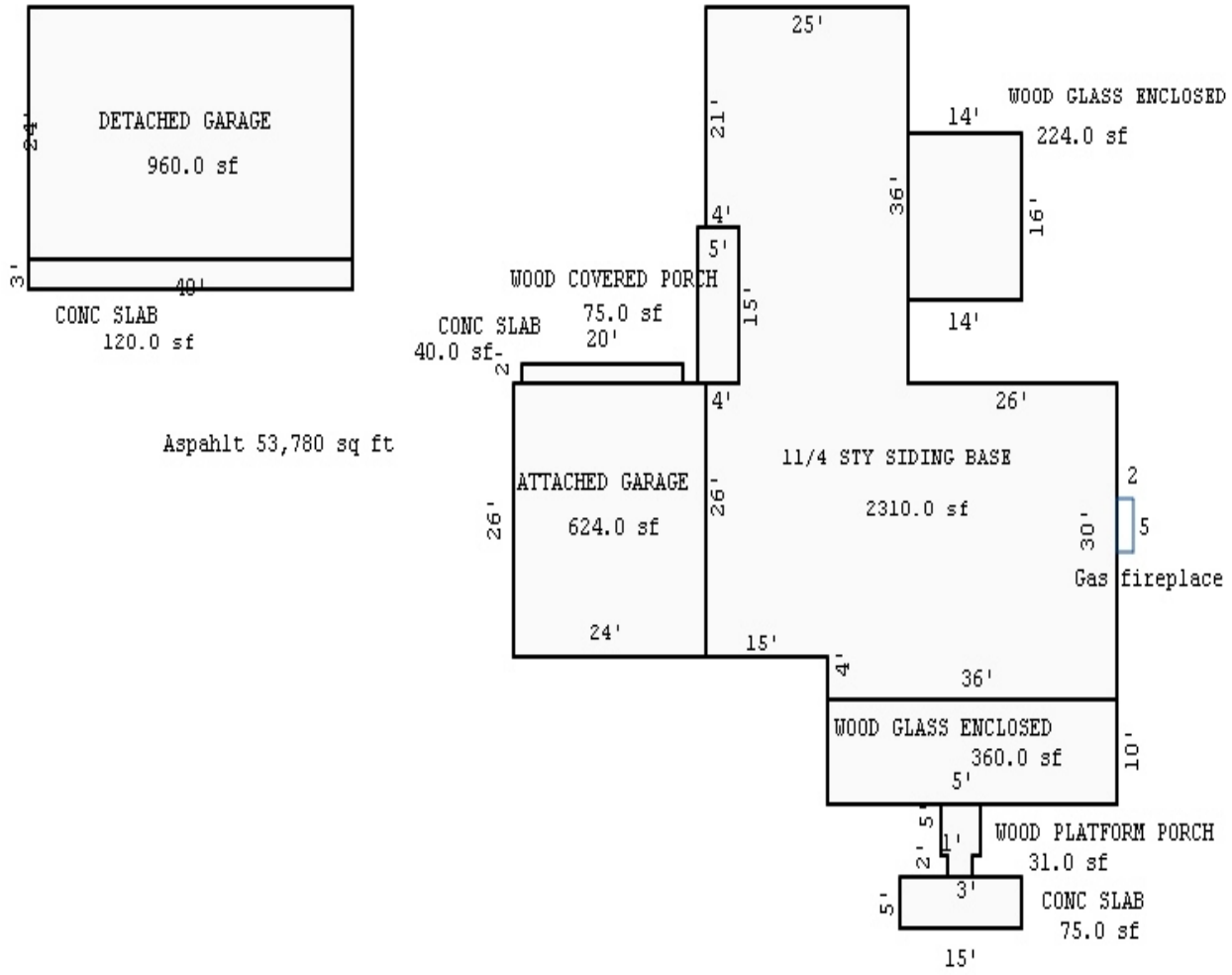

Sketch by Apex Medina™

*** Information herein deemed reliable but not guaranteed***

Parcel Number: 2410-05-2202 Jurisdiction: GREENWOOD TWP County: WEXFORD Printed on 02/15/2024

Grantor	Grantee	Sale Price	Sale Date	Inst. Type	Terms of Sale	Liber & Page	Verified By	Prcnt. Trans.
HERBERT FAMILY TRUST	CROFOOT, RONALD P JR & KRI	183,500	08/21/2008	WD	03-ARM'S LENGTH	614/121	DEED	100.0
BERRY, FRANK R.	BOONSTRA, TODD E.	69,900	10/14/1993	WD	03-ARM'S LENGTH	336:507	DEED	0.0
SCHWARTZLANDER, FRED	BERRY, FRANK R.	50,000	10/13/1986	WD	03-ARM'S LENGTH	303:667	DEED	0.0

Property Address

1142 E COUNTY LINE RD

Owner's Name/Address

CROFOOT, RONALD P JR & KRISTINE S
2284 W U AVE
SCHOOLCRAFT MI 49087-8730

Tax Description

PAR COM 676 FT E OF NW COR OF SEC: E 300 FT; S 800 FT; W 300 FT; N 800 FT; TO POB. --5.5 A M/L-- GW. SEC. 5 T24N R10W -KINGSLEY-

Comments/Influences

The Equalizer. Copyright (c) 1999 - 2009. Licensed To: Township of Greenwood, County of Wexford, Michigan

Class: RESIDENTIAL-IMPROV Zoning:

School: KINGSLEY AREA SCHOOL

P.R.E. 0%

:

2024 Est TCV 225,632 TCV/TFA: 137.75

	Building Permit(s)	Date	Number	Status
	RESIDENTIAL - REMODEL	02/12/2001	PM4848	
	RESIDENTIAL - NEW	03/26/1998	PP833	

X Improved | Vacant

	Public Improvements
	Dirt Road
	Gravel Road
X	Paved Road
	Storm Sewer
	Sidewalk
	Water
	Sewer
X	Electric
	Gas
	Curb
	Street Lights
	Standard Utilities
	Underground Utils.

	Topography of Site
	Level
X	Rolling
	Low
	High
	Landscaped
	Swamp
	Wooded
	Pond
	Waterfront
	Ravine
	Wetland
	Flood Plain
X	OPEN

Who	When	What
GLA	05/13/2021	INSPECTION
LM	09/21/2009	DATA ENTER
LM	08/26/2009	INSPECTED

Land Value Estimates for Land Table 4010.LAND VALUES

Description	Frontage	Depth	* Factors * Front	Depth	Rate	%Adj.	Reason	Value
ACREAGE			5.280 Acres		5,112	100		26,991
ROW			0.220 Acres		0	100		0
			5.50 Total Acres		Total Est. Land Value =			26,991

Land Improvement Cost Estimates

Description	Rate	Size	% Good	Cash Value
D/W/P: 3.5 Concrete	5.82	238	58	803
Wood Frame/Conc.	37.15	40	36	535
Total Estimated Land Improvements True Cash Value =				1,338

Year	Land Value	Building Value	Assessed Value	Board of Review	Tribunal/ Other	Taxable Value
2024	13,500	99,300	112,800			57,977C
2023	10,900	81,400	92,300			55,217C
2022	7,900	68,900	76,800			52,588C
2021	9,000	70,100	79,100			50,909C

*** Information herein deemed reliable but not guaranteed***

Building Type

X	Single Family
	Mobile Home
	Town Home
	Duplex
	A-Frame
X	Wood Frame

Building Style: FARMHOUSE

Yr Built	Remodeled
0	0

Condition: Average

Room List

	Basement
4	1st Floor
4	2nd Floor
5	Bedrooms

(1) Exterior

	Wood/Shingle
	Aluminum/Vinyl
	Brick
X	Vinyl
	Insulation

(2) Windows

X	Many		Large
	Avg.	X	Avg.
	Few		Small

	Wood Sash
	Metal Sash
X	Vinyl Sash
X	Double Hung
	Horiz. Slide
X	Casement
	Double Glass
	Patio Doors
X	Storms & Screens

(3) Roof

X	Gable		Gambrel
	Hip		Mansard
	Flat		Shed

X	Asphalt Shingle

Chimney: Block

(3) Roof (cont.)

	Eavestrough
	Insulation
2	Front Overhang
2	Other Overhang

(4) Interior

	Drywall		Plaster
	Paneled		Wood T&G

Trim & Decoration

	Ex	X	Ord		Min

Size of Closets

	Lg	X	Ord		Small

Doors:		Solid	X	H.C.	

(5) Floors

Kitchen:
Other:
Other:

(6) Ceilings

(7) Excavation

Basement: 840 S.F.
Crawl: 168 S.F.
Slab: 0 S.F.
Height to Joists: 0.0

(8) Basement

	Conc. Block
	Poured Conc.
	Stone
	Treated Wood
	Concrete Floor

(9) Basement Finish

	Recreation	SF
	Living	SF
	Walkout Doors (B)	
	No Floor	SF
	Walkout Doors (A)	

(10) Floor Support

Joists:
Unsupported Len:
Cntr.Sup:

(11) Heating/Cooling

X	Gas		Oil		Elec.
	Wood		Coal		Steam

	Forced Air w/o Ducts
	Forced Air w/ Ducts
	Forced Hot Water
	Electric Baseboard
	Elec. Ceil. Radiant
	Radiant (in-floor)
	Electric Wall Heat
	Space Heater
	Wall/Floor Furnace
X	Forced Heat & Cool
	Heat Pump
	No Heating/Cooling

X	Central Air
	Wood Furnace

(12) Electric

0	Amps Service

No./Qual. of Fixtures

	Ex.	X	Ord.		Min

No. of Elec. Outlets

	Many	X	Ave.		Few

(13) Plumbing

	Average Fixture(s)
1	3 Fixture Bath
	2 Fixture Bath
	Softener, Auto
	Softener, Manual
	Solar Water Heat
	No Plumbing
	Extra Toilet
	Extra Sink
	Separate Shower
	Ceramic Tile Floor
	Ceramic Tile Wains
	Ceramic Tub Alcove
	Vent Fan

(14) Water/Sewer

	Public Water
	Public Sewer
1	Water Well
1	1000 Gal Septic
	2000 Gal Septic

Lump Sum Items:

(15) Built-ins

	Appliance Allow.
	Cook Top
	Dishwasher
	Garbage Disposal
	Bath Heater
	Vent Fan
	Hot Tub
	Unvented Hood
	Vented Hood
	Intercom
	Jacuzzi Tub
	Jacuzzi repl.Tub
	Oven
	Microwave
	Standard Range
	Self Clean Range
	Sauna
	Trash Compactor
	Central Vacuum
	Security System

(15) Fireplaces

	Interior 1 Story
	Interior 2 Story
	2nd/Same Stack
	Two Sided
	Exterior 1 Story
	Exterior 2 Story
	Prefab 1 Story
	Prefab 2 Story
	Heat Circulator
	Raised Hearth
	Wood Stove
	Direct-Vented Gas

Class: CD
Effec. Age: 39
Floor Area: 1,638
Total Base New : 247,231 E.C.F.
Total Depr Cost: 150,811 X 1.297
Estimated T.C.V: 195,602

(16) Porches/Decks

Area	Type
240	CCP (1 Story)
144	Brzwy, FW

(17) Garage

Year Built:
Car Capacity:
Class: CD
Exterior: Siding
Brick Ven.: 0
Stone Ven.: 0
Common Wall: 1/2 Wal
Foundation: 42 Inch
Finished ?:
Auto. Doors: 0
Mech. Doors: 0
Area: 720
% Good: 0
Storage Area: 0
No Conc. Floor: 0

Bsmnt Garage:

Carport Area:
Roof:

Cost Est. for Res. Bldg: 1 Single Family FARMHOUSE Cls CD Blt 0
(11) Heating System: Forced Heat & Cool, Air Conditioning
Ground Area = 1008 SF Floor Area = 1638 SF.
Phy/Ab.Phy/Func/Econ/Comb. % Good=61/100/100/100/61
Building Areas

Stories	Exterior	Foundation	Size	Cost New	Depr. Cost
1.75 Story	Siding	Basement	840		
1 Story	Siding	Crawl Space	168		
			Total:	199,466	121,674

Other Additions/Adjustments

Water/Sewer			
1000 Gal Septic	1	4,582	2,795
Water Well, 100 Feet	1	5,680	3,465
Porches			
CCP (1 Story)	240	5,635	3,437
Garages			
Class: CD Exterior: Siding Foundation: 42 Inch (Unfinished)			
Base Cost	720	26,244	16,009
Common Wall: 1/2 Wall	1	-1,261	-769
Breezeways			
Frame Wall	144	6,885	4,200
	Totals:	247,231	150,811

Notes:
ECF (RESIDENTIAL) 1.297 => TCV: 195,602

*** Information herein deemed reliable but not guaranteed***

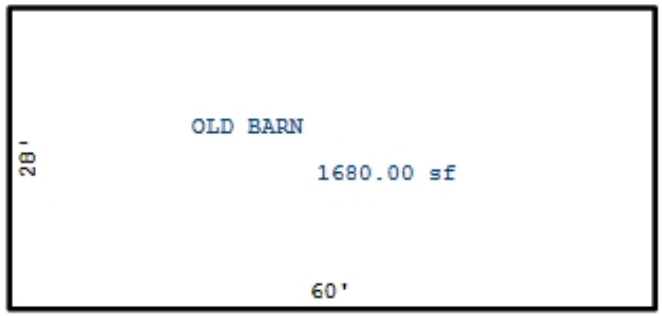

FENCE FOR ANIMALS
1309 LF
SOME OF THESE ARE TWO RAILINGS AND THREE RAILINGS

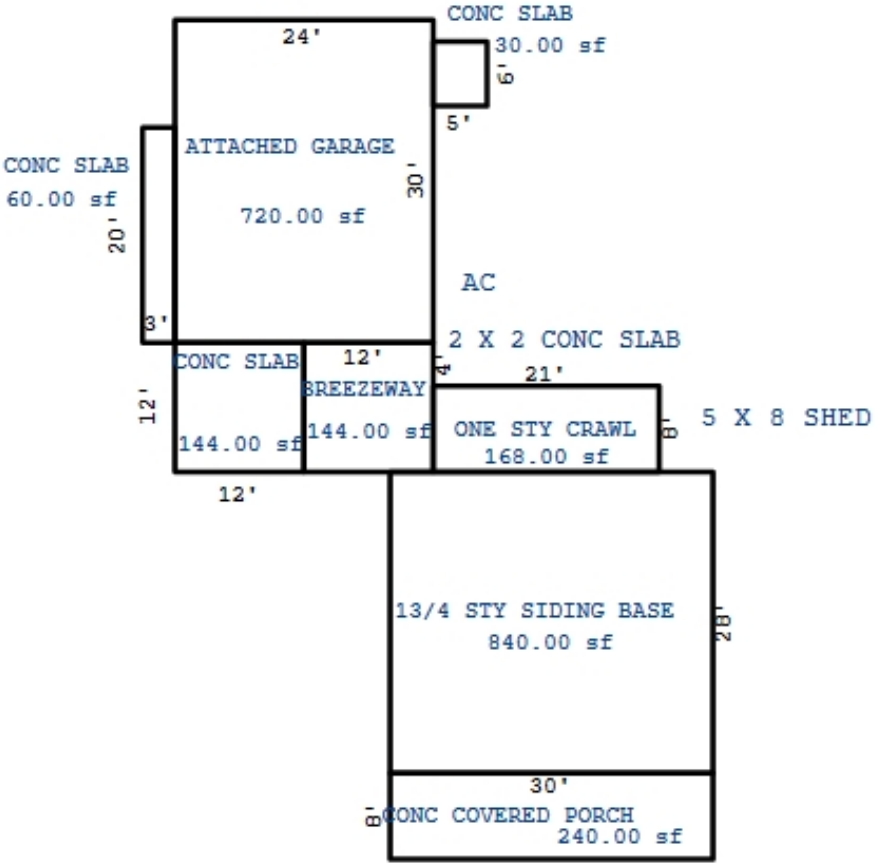

*** Information herein deemed reliable but not guaranteed***

Building Type	Barn - General Purpose				
Year Built					
Class/Construction	D,Frame				
Quality/Exterior	Low Cost				
# of Walls, Perimeter	4 Wall, 176				
Height	12				
Heating System	No Heating/Cooling				
Length/Width/Area	60 x 28 = 1680				
Cost New	$ 44,957				
Phy./Func./Econ. %Good	20/20/100 4.0				
Depreciated Cost	$ 1,798				
+ Unit-In-Place Items	$ 0				
Description, Size X Rate X %Good = Cost Itemized ->\ Unit-In-Place ->\ Items ->\					
E.C.F.	X 0.946				
% Good	20				
Est. True Cash Value	$ 1,701				
Comments:					
Total Estimated True Cash Value of Agricultural Improvements / This Card: 1701 / All Cards: 1701					

*** Information herein deemed reliable but not guaranteed***

Parcel Number: 2410-05-3101-01 Jurisdiction: GREENWOOD TWP County: WEXFORD Printed on 02/15/2024

Grantor	Grantee	Sale Price	Sale Date	Inst. Type	Terms of Sale	Liber & Page	Verified By	Prcnt. Trans.

Property Address

Class: AGRICULTURAL-VACAN Zoning:

School: KINGSLEY AREA SCHOOL

P.R.E. 35% / / Qual. Ag.

:

2024 Est TCV 363,688

Building Permit(s)	Date	Number	Status

Owner's Name/Address

ARLT, JIM D & TOM HULETT
11659 N 29 1/2 RD
KINGSLEY MI 49649

[ ] Improved [X] Vacant

Land Value Estimates for Land Table 1010.AG

Description	Frontage	Depth	* Factors * Front	Depth	Rate	%Adj.	Reason	Value
AG LAND	80 ACRES		135.20 Acres		2690	100		363,688
			135.20 Total Acres		Total Est. Land Value =			363,688

Public Improvements

- [ ] Dirt Road
- [ ] Gravel Road
- [ ] Paved Road
- [ ] Storm Sewer
- [ ] Sidewalk
- [ ] Water
- [ ] Sewer
- [ ] Electric
- [ ] Gas
- [ ] Curb
- [ ] Street Lights
- [ ] Standard Utilities
- [ ] Underground Utils.

Topography of Site

- [ ] Level
- [ ] Rolling
- [ ] Low
- [ ] High
- [ ] Landscaped
- [ ] Swamp
- [ ] Wooded
- [ ] Pond
- [ ] Waterfront
- [ ] Ravine
- [ ] Wetland
- [ ] Flood Plain

Tax Description

PAR A: PT OF S 1/2 OF SEC DESC AS COM AT W 1/4 COR OF DS SEC; E 1963.48 FT TO POB; E668.50 FT TO C 1/4 COR; E 311.35 FT TO NW'LY ROW OF E 2 1/2 RD; E 348.68 FT; S 32.90 FT; S 628.81 FT; E 658.49 FT; S 1983.56 FT W 633.74 FT W 68.67 FT; W 618.61 FT; W 1320.43 FT; N 1748.50 FT E 846.12 FT; N 400 FT; W 200 FT; N 500 FT TO POB. 135.20 FT TO POB. --135.09 A M/L-- GW. SEC. 5 T24N R10W -KINGSLEY- SPLIT ON 01/06/2022 FROM 2410-05-3101;

Comments/Influences

Split/Comb. on 01/06/2022 completed 01/06/2022 LINDA ;
Parent Parcel(s): 2410-05-3101;
Child Parcel(s): 2410-05-3101-01, 2410-05-3101-02;

Who When What

GLA 10/31/2022 INSPECTION

Year	Land Value	Building Value	Assessed Value	Board of Review	Tribunal/ Other	Taxable Value
2024	181,800	0	181,800			60,515C
2023	135,200	0	135,200			57,634C
2022	121,700	0	121,700			54,890C
2021	0	0	0			0

The Equalizer. Copyright (c) 1999 - 2009. Licensed To: Township of Greenwood, County of Wexford, Michigan

*** Information herein deemed reliable but not guaranteed***

Parcel Number: 2410-05-3101-02 Jurisdiction: GREENWOOD TWP County: WEXFORD Printed on 02/15/2024

Grantor	Grantee	Sale Price	Sale Date	Inst. Type	Terms of Sale	Liber & Page	Verified By	Prcnt. Trans.
ARLT, JIM D & TOM HULETT	METCALF, CHEYEME M & ETAL	0	03/18/2021	WD	21-NOT USED/OTHER	689/1474	DEED	0.0

Property Address

N 29 1/2 RD

Owner's Name/Address

METCALF, CHEYEME M & ETAL
1700 E 2 1/2 RD
KINGSLEY MI 49649

Class: RESIDENTIAL-IMPROV Zoning:

School: KINGSLEY AREA SCHOOL

P.R.E. 100% 02/08/2023

:

2024 Est TCV 227,413 TCV/TFA: 111.48

Building Permit(s)	Date	Number	Status
Res. New Construction	04/29/2021	PB21-0069	COMPLETE

X Improved | Vacant

Public Improvements

- Dirt Road
- Gravel Road
- Paved Road
- Storm Sewer
- Sidewalk
- Water
- Sewer
- Electric
- Gas
- Curb
- Street Lights
- Standard Utilities
- Underground Utils.

Topography of Site

- Level
- Rolling
- Low
- High
- Landscaped
- Swamp
- Wooded
- Pond
- Waterfront
- Ravine
- Wetland
- Flood Plain

Tax Description

PAR B: PT OF S 1/2 OF SEC DESC AS COM AT 1 1/4 COR OF SD SEC; E 1963.48 FT; E 668.50 FT TO C 1/4 OF SEC; E 660.03 FT TO POB; E 658.49 FT ;; S 33.02 FT TO S ROW OF E 2 1/2 RD; S 628.49 FT ; W 658.49 FT; N 628.61 FT; N 32.90 FT TO POB 10 AC M/L-- GW. SEC. 5 T24N R10W -KINGSLEY- SPLIT ON 01/06/2022 FROM 2410-05-3101;

Comments/Influences

Split/Comb. on 01/06/2022 completed 01/06/2022 LINDA ;
Parent Parcel(s): 2410-05-3101;
Child Parcel(s): 2410-05-3101-01, 2410-05-3101-02;

Who When What

GLA 10/31/2022 INSPECTION

Land Value Estimates for Land Table 4010.LAND VALUES

Description	Frontage	Depth	* Factors * Front	Depth	Rate	%Adj.	Reason	Value
ACREAGE			10.000 Acres		4,635	100		46,350
			10.00 Total Acres		Total Est. Land Value =			46,350

Year	Land Value	Building Value	Assessed Value	Board of Review	Tribunal/ Other	Taxable Value
2024	23,200	90,500	113,700			88,971C
2023	13,000	82,400	95,400			84,735C
2022	12,000	68,700	80,700			80,700S
2021	0	0	0			0

The Equalizer. Copyright (c) 1999 - 2009. Licensed To: Township of Greenwood, County of Wexford, Michigan

*** Information herein deemed reliable but not guaranteed***

Building Type

X	Single Family
	Mobile Home
	Town Home
	Duplex
	A-Frame
X	Wood Frame

Building Style: PLAIN

Yr Built	Remodeled
0	0

Condition: Good

Room List

	Basement
	1st Floor
	2nd Floor
	Bedrooms

(1) Exterior

	Wood/Shingle
X	Aluminum/Vinyl
	Brick
X	Insulation

(2) Windows

	Many		Large
X	Avg.	X	Avg.
	Few		Small

	Wood Sash
	Metal Sash
X	Vinyl Sash
	Double Hung
	Horiz. Slide
	Casement
	Double Glass
	Patio Doors
X	Storms & Screens

(3) Roof

X	Gable		Gambrel
	Hip		Mansard
	Flat		Shed

X	Asphalt Shingle

Chimney:

(3) Roof (cont.)

	Eavestrough
X	Insulation
0	Front Overhang
0	Other Overhang

(4) Interior

X	Drywall		Plaster
	Paneled		Wood T&G

Trim & Decoration

	Ex	X	Ord		Min

Size of Closets

	Lg	X	Ord		Small

Doors:		Solid	X	H.C.	

(5) Floors

Kitchen:
Other: Linoleum
Other: Carpeted

(6) Ceilings

X	Drywall		

(7) Excavation

Basement: 0 S.F.
Crawl: 0 S.F.
Slab: 2040 S.F.
Height to Joists: 0.0

(8) Basement

	Conc. Block
	Poured Conc.
	Stone
	Treated Wood
	Concrete Floor

(9) Basement Finish

	Recreation SF
	Living SF
	Walkout Doors (B)
	No Floor SF
	Walkout Doors (A)

(10) Floor Support

Joists:
Unsupported Len:
Cntr.Sup:

(11) Heating/Cooling

X	Gas		Oil		Elec.
	Wood		Coal		Steam

	Forced Air w/o Ducts
X	Forced Air w/ Ducts
	Forced Hot Water
	Electric Baseboard
	Elec. Ceil. Radiant
	Radiant (in-floor)
	Electric Wall Heat
	Space Heater
	Wall/Floor Furnace
	Forced Heat & Cool
	Heat Pump
	No Heating/Cooling

	Central Air
	Wood Furnace

(12) Electric

150	Amps Service

No./Qual. of Fixtures

	Ex.	X	Ord.		Min

No. of Elec. Outlets

	Many	X	Ave.		Few

(13) Plumbing

1	Average Fixture(s)
	3 Fixture Bath
	2 Fixture Bath
	Softener, Auto
	Softener, Manual
	Solar Water Heat
	No Plumbing
	Extra Toilet
	Extra Sink
	Separate Shower
	Ceramic Tile Floor
	Ceramic Tile Wains
	Ceramic Tub Alcove
	Vent Fan

(14) Water/Sewer

	Public Water
	Public Sewer
1	Water Well
1	1000 Gal Septic
	2000 Gal Septic

Lump Sum Items:

(15) Built-ins

	Appliance Allow.
	Cook Top
	Dishwasher
	Garbage Disposal
	Bath Heater
	Vent Fan
	Hot Tub
	Unvented Hood
	Vented Hood
	Intercom
	Jacuzzi Tub
	Jacuzzi repl.Tub
	Oven
	Microwave
	Standard Range
	Self Clean Range
	Sauna
	Trash Compactor
	Central Vacuum
	Security System

(15) Fireplaces

	Interior 1 Story
	Interior 2 Story
	2nd/Same Stack
	Two Sided
	Exterior 1 Story
	Exterior 2 Story
	Prefab 1 Story
	Prefab 2 Story
	Heat Circulator
	Raised Hearth
	Wood Stove
	Direct-Vented Gas

Class: D
Effec. Age: 4
Floor Area: 2,040
Total Base New : 199,374 E.C.F.
Total Depr Cost: 191,399 X 0.946
Estimated T.C.V: 181,063

(16) Porches/Decks

Area	Type

(17) Garage

Year Built:
Car Capacity:
Class:
Exterior:
Brick Ven.:
Stone Ven.:
Common Wall:
Foundation:
Finished ?:
Auto. Doors:
Mech. Doors:
Area:
% Good:
Storage Area:
No Conc. Floor:

Bsmnt Garage:

Carport Area:
Roof:

Cost Est. for Res. Bldg: 1 Single Family PLAIN Cls D Blt 0
(11) Heating System: Forced Air w/ Ducts
Ground Area = 2040 SF Floor Area = 2040 SF.
Phy/Ab.Phy/Func/Econ/Comb. % Good=96/100/100/100/96

Building Areas

Stories	Exterior	Foundation	Size	Cost New	Depr. Cost
1 Story	Siding	Slab	2,040		
			Total:	189,536	181,955

Other Additions/Adjustments

Water/Sewer			
1000 Gal Septic	1	4,293	4,121
Water Well, 100 Feet	1	5,545	5,323
	Totals:	199,374	191,399

Notes:

ECF (AG) 0.946 => TCV: 181,063

*** Information herein deemed reliable but not guaranteed***

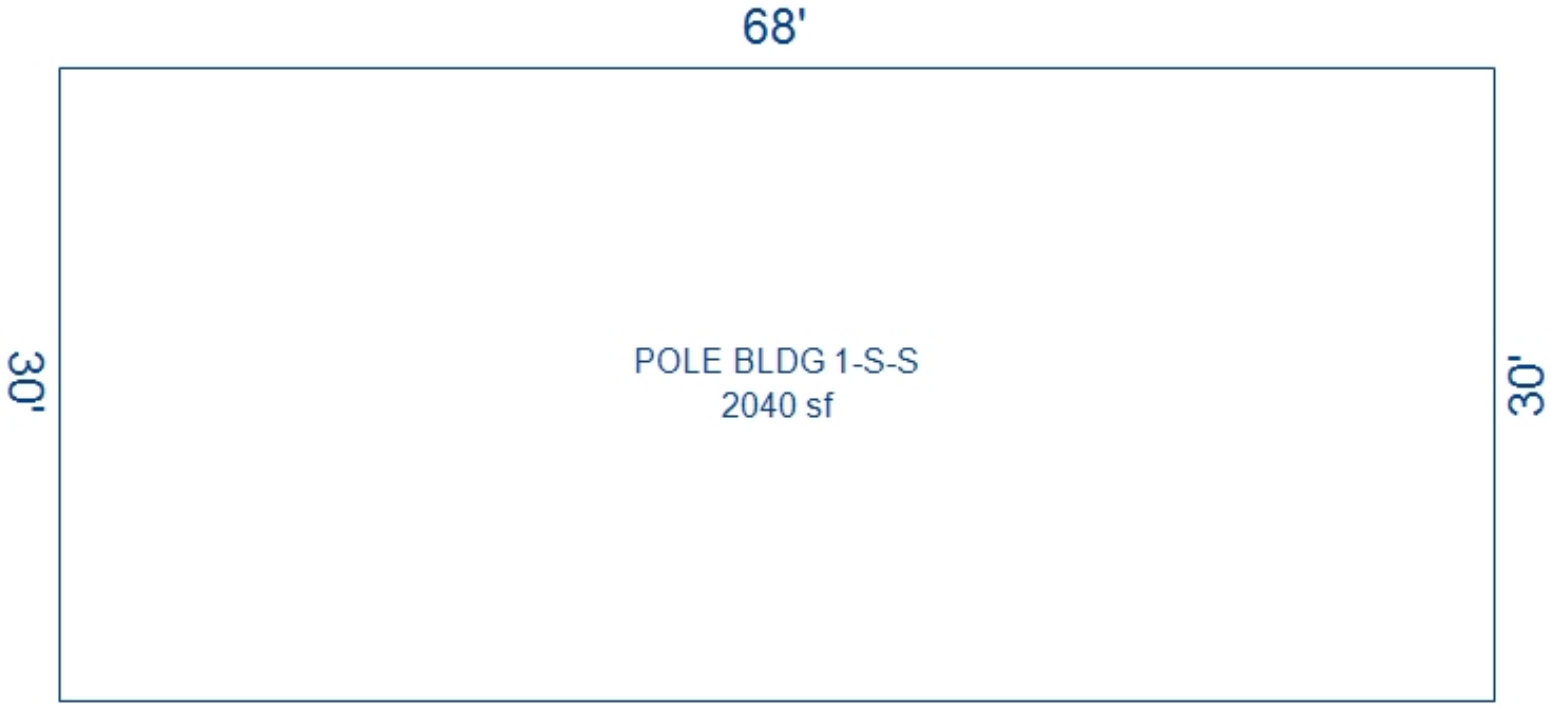

*** Information herein deemed reliable but not guaranteed***

Parcel Number: 2410-05-4101 Jurisdiction: GREENWOOD TWP County: WEXFORD Printed on 02/15/2024

Grantor	Grantee	Sale Price	Sale Date	Inst. Type	Terms of Sale	Liber & Page	Verified By	Prcnt. Trans.
BLACK MOUNTAIN CONSTRUCTIO	MEINER, SCOTT & KELLIE S	310,000	08/18/2010	WD	11-FROM LENDING INSTITUTI	632/1216	DEED	100.0
ARLT, DONALD R & MICHELE	BLACK MOUNTAIN CONSTRUCTIC	336,588	05/16/2008	SD	21-NOT USED/OTHER	611/2270	DEED	0.0
ARLT, DONALD R. & CAROLYN	ARLT, DONALD R & MICHELE	209,000	10/24/2007	WD	09-FAMILY	605/2962	DEED	100.0

Property Address

1770 E 2 1/2 RD

Owner's Name/Address

MEINER, SCOTT & KELLIE S
1770 E 2 1/2 RD
KINGSLEY MI 49649

Tax Description

E 1/2 OF SE 1/4 --80 A M/L-- GW. SEC. 5 T24N R10W -KINGSLEY- SPLIT ON 11/07/2007 FROM 2410-05-1301;

Comments/Influences

Split/Comb. on 11/07/2007 completed / / DEB OWNER REQUEST ;
Parent Parcel(s): 2410-05-1301;
Child Parcel(s): 2410-05-1301-01, 2410-05-1301-02, 2410-05-4101;

The Equalizer. Copyright (c) 1999 - 2009.
Licensed To: Township of Greenwood, County of Wexford, Michigan

Class: RESIDENTIAL-IMPROV Zoning:
School: KINGSLEY AREA SCHOOL
P.R.E. 100% 08/18/2010
:
2024 Est TCV 1,009,008 TCV/TFA: 256.88

Building Permit(s)	Date	Number	Status
Res. New Construction	12/16/2010	PM10-11279	
Res. Add/Alter/Repair	11/08/2010	PP10-5034	
Permit renewal (50% of ori	09/14/2010	PB10-0206	
Res. Single Family	08/15/2008	PE08-18323	

X Improved | Vacant

Public Improvements

- Dirt Road
- X Gravel Road
- X Paved Road
- Storm Sewer
- Sidewalk
- Water
- Sewer
- X Electric
- Gas
- Curb
- Street Lights
- Standard Utilities
- Underground Utils.

Topography of Site

- Level
- X Rolling
- Low
- High
- Landscaped
- Swamp
- X Wooded
- Pond
- Waterfront
- Ravine
- Wetland
- Flood Plain
- X OPEN

Who	When	What
GLA	05/13/2021	INSPECTION
LM	10/20/2010	INSPECTED
GLA	05/05/2016	INSPECTION

Land Value Estimates for Land Table 4010.LAND VALUES

Description	Frontage	Depth	* Factors * Front	Depth	Rate	%Adj.	Reason	Value
ACREAGE			79.000 Acres		2,544	100		201,002
ROW			1.000 Acres		0	100		0
			80.00 Total Acres		Total Est. Land Value =			201,002

Land Improvement Cost Estimates

Description	Rate	Size	% Good	Cash Value
D/W/P: 4in Concrete	7.01	5512	58	22,411
Total Estimated Land Improvements True Cash Value =				22,411

Year	Land Value	Building Value	Assessed Value	Board of Review	Tribunal/ Other	Taxable Value
2024	100,500	404,000	504,500			258,017C
2023	85,100	332,500	417,600			245,731C
2022	67,200	280,700	347,900			234,030C
2021	61,400	230,500	291,900			207,484C

*** Information herein deemed reliable but not guaranteed***

Building Type

X	Single Family
	Mobile Home
	Town Home
	Duplex
	A-Frame
X	Wood Frame

Building Style: TWO STORY

Yr Built	Remodeled
2007	0

Condition: Good

Room List

4	Basement
3	1st Floor
3	2nd Floor
4	Bedrooms

(1) Exterior

	Wood/Shingle
	Aluminum/Vinyl
	Brick
X	Vinyl
	Insulation

(2) Windows

X	Many Avg. Few	X	Large Avg. Small

	Wood Sash
	Metal Sash
X	Vinyl Sash
X	Double Hung
	Horiz. Slide
X	Casement
	Double Glass
X	Patio Doors
X	Storms & Screens

(3) Roof

X	Gable		Gambrel
	Hip		Mansard
	Flat		Shed

X	Asphalt Shingle

Chimney:

(3) Roof (cont.)

	Eavestrough
	Insulation
0	Front Overhang
0	Other Overhang

(4) Interior

X	Drywall		Plaster
	Paneled		Wood T&G

Trim & Decoration

	Ex	X	Ord		Min

Size of Closets

	Lg	X	Ord		Small

Doors:		Solid	X	H.C.	

(5) Floors

Kitchen: Hardwood
Other: Hardwood
Other:

(6) Ceilings

X	Drywall
X	Cathedral

(7) Excavation

Basement: 2172 S.F.
Crawl: 0 S.F.
Slab: 0 S.F.
Height to Joists: 0.0

(8) Basement

	Conc. Block
	Poured Conc.
	Stone
	Treated Wood
	Concrete Floor

(9) Basement Finish

	Recreation	SF
2052	Living	SF
1	Walkout Doors (B)	
	No Floor	SF
	Walkout Doors (A)	

(10) Floor Support

Joists:
Unsupported Len:
Cntr.Sup:

(11) Heating/Cooling

X	Gas		Oil		Elec.
	Wood		Coal		Steam

	Forced Air w/o Ducts
	Forced Air w/ Ducts
	Forced Hot Water
	Electric Baseboard
	Elec. Ceil. Radiant
	Radiant (in-floor)
	Electric Wall Heat
	Space Heater
	Wall/Floor Furnace
X	Forced Heat & Cool
	Heat Pump
	No Heating/Cooling

	Central Air
	Wood Furnace

(12) Electric

0	Amps Service

No./Qual. of Fixtures

X	Ex.		Ord.		Min

No. of Elec. Outlets

X	Many		Ave.		Few

(13) Plumbing

4	Average Fixture(s)
	3 Fixture Bath
	2 Fixture Bath
	Softener, Auto
	Softener, Manual
	Solar Water Heat
	No Plumbing
	Extra Toilet
	Extra Sink
	Separate Shower
	Ceramic Tile Floor
	Ceramic Tile Wains
	Ceramic Tub Alcove
	Vent Fan

(14) Water/Sewer

	Public Water
	Public Sewer
1	Water Well
1	1000 Gal Septic
	2000 Gal Septic

Lump Sum Items:

(15) Built-ins

	Appliance Allow.
	Cook Top
	Dishwasher
	Garbage Disposal
	Bath Heater
	Vent Fan
	Hot Tub
	Unvented Hood
	Vented Hood
	Intercom
	Jacuzzi Tub
	Jacuzzi repl.Tub
	Oven
	Microwave
	Standard Range
	Self Clean Range
	Sauna
	Trash Compactor
	Central Vacuum
	Security System

(15) Fireplaces

	Interior 1 Story
	Interior 2 Story
	2nd/Same Stack
	Two Sided
	Exterior 1 Story
	Exterior 2 Story
	Prefab 1 Story
	Prefab 2 Story
	Heat Circulator
	Raised Hearth
	Wood Stove
	Direct-Vented Gas

Class: C
Effec. Age: 15
Floor Area: 3,928
Total Base New : 675,897 E.C.F.
Total Depr Cost: 574,510 X 1.297
Estimated T.C.V: 745,139

(16) Porches/Decks

Area	Type
288	Treated Wood
1248	Treated Wood
48	Treated Wood

(17) Garage

Year Built:
Car Capacity:
Class: C
Exterior: Siding
Brick Ven.: 0
Stone Ven.: 0
Common Wall: 1 Wall
Foundation: 42 Inch
Finished ?: Yes
Auto. Doors: 0
Mech. Doors: 0
Area: 1636
% Good: 0
Storage Area: 0
No Conc. Floor: 0

Bsmnt Garage:

Carport Area:
Roof:

Cost Est. for Res. Bldg: 1 Single Family TWO STORY Cls C Blt 2007
(11) Heating System: Forced Heat & Cool
Ground Area = 2172 SF Floor Area = 3928 SF.
Phy/Ab.Phy/Func/Econ/Comb. % Good=85/100/100/100/85
Building Areas

Stories	Exterior	Foundation	Size	Cost New	Depr. Cost
2 Story	Siding	Basement	1,756		
1 Story	Siding	Basement	416		
		Total:		443,206	376,723
Other Additions/Adjustments					
Basement Living Area			2052	74,098	62,983
Basement, Outside Entrance, Below Grade			1	2,578	2,191
Plumbing					
3 Fixture Bath			3	14,035	11,930
Water/Sewer					
1000 Gal Septic			1	4,899	4,164
Water Well, 100 Feet			1	5,849	4,972
Deck					
Treated Wood w/Roof (Deck Portion)			288	5,299	4,504
Treated Wood w/Roof (Roof portion)			288	4,524	3,845
Treated Wood			48	1,742	1,481
Treated Wood			1248	16,324	13,875
Garages					
Class: C Exterior: Siding Foundation: 42 Inch (Finished)					
Common Wall: 1 Wall			1	-2,705	-2,299
Base Cost			1636	71,248	60,561
Class: CD Exterior: Pole (Unfinished)					
Base Cost			1600	34,800	29,580
		Totals:		675,897	574,510

Notes:

ECF (RESIDENTIAL) 1.297 => TCV: 745,139

*** Information herein deemed reliable but not guaranteed***

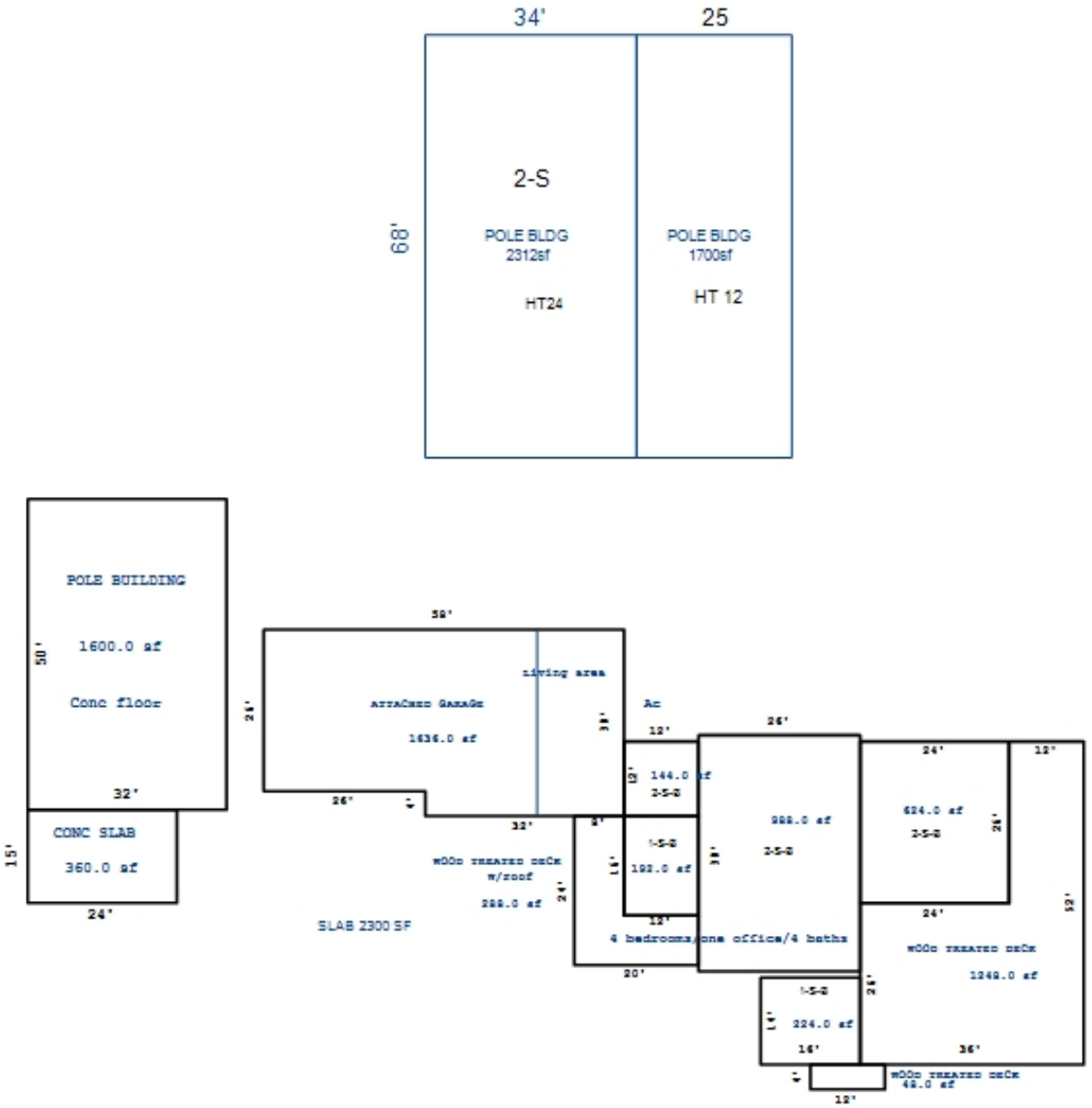

*** Information herein deemed reliable but not guaranteed***

Building Type	Farm Utility Buildings	Farm Utility Buildings			
Year Built					
Class/Construction	D,Pole	D,Pole			
Quality/Exterior	Average	Average			
# of Walls, Perimeter	4 Wall, 136	4 Wall, 118			
Height	20	12			
Heating System	No Heating/Cooling	No Heating/Cooling			
Length/Width/Area	68 x 34 = 2312	68 x 25 = 1700			
Cost New	$ 38,957	$ 25,840			
Phy./Func./Econ. %Good	66/100/100 66.0	66/100/100 66.0			
Depreciated Cost	$ 25,712	$ 17,054			
+ Unit-In-Place Items	$ 0	$ 0			
Description, Size X Rate X %Good = Cost Itemized ->\ Unit-In-Place ->\ Items ->\					
E.C.F.	X 0.946	X 0.946			
% Good	66	66			
Est. True Cash Value	$ 24,323	$ 16,133			
Comments:					
Total Estimated True Cash Value of Agricultural Improvements / This Card: 40456 / All Cards: 40456					

*** Information herein deemed reliable but not guaranteed***

Parcel Number: 2410-06-1101 Jurisdiction: GREENWOOD TWP County: WEXFORD Printed on 02/15/2024

Grantor	Grantee	Sale Price	Sale Date	Inst. Type	Terms of Sale	Liber & Page	Verified By	Prcnt. Trans.

Property Address	Class: RESIDENTIAL-IMPROV	Zoning:	Building Permit(s)	Date	Number	Status
944 E COUNTY LINE RD	School: KINGSLEY AREA SCHOOL		RESIDENTIAL - NEW	01/22/2003	PM6538	
	P.R.E. 100% / /		RESIDENTIAL - NEW	09/08/1993	PE7569	
Owner's Name/Address	:					
HULETT, ROBERT & ANNETTE 944 E COUNTY LINE RD KINGSLEY MI 49649	2024 Est TCV 194,040 TCV/TFA: 168.44					

X Improved | Vacant

Tax Description

E 1/8 OF FRL NE 1/4 22 A. M/L GW. SEC. 6 T24N R10W -KINGSLEY-

Comments/Influences

	Public Improvements
	Dirt Road
	Gravel Road
X	Paved Road
	Storm Sewer
	Sidewalk
	Water
	Sewer
X	Electric
	Gas
	Curb
	Street Lights
	Standard Utilities
	Underground Utils.

	Topography of Site
X	Level
X	Rolling
	Low
	High
	Landscaped
	Swamp
X	Wooded
	Pond
	Waterfront
	Ravine
	Wetland
	Flood Plain
X	OPEN/PINES

Who	When	What
GLA	05/13/2021	INSPECTION
GLA	05/01/2014	INSPECTION
GLA	05/05/2016	INSPECTION

Land Value Estimates for Land Table 4010.LAND VALUES

Description	Frontage	Depth	* Factors * Front	Depth	Rate	%Adj.	Reason	Value
ACREAGE			21.740 Acres		3,009	100		65,409
ROW			0.260 Acres		0	100		0
			22.00 Total Acres				Total Est. Land Value =	65,409

Land Improvement Cost Estimates

Description	Rate	Size	% Good	Cash Value
D/W/P: 3.5 Concrete	6.21	152	48	453
Total Estimated Land Improvements True Cash Value =				453

Year	Land Value	Building Value	Assessed Value	Board of Review	Tribunal/ Other	Taxable Value
2024	32,700	64,300	97,000			10,151C
2023	27,800	52,400	80,200			9,668C
2022	23,900	44,300	68,200			9,208C
2021	21,700	38,000	59,700			8,914C

The Equalizer. Copyright (c) 1999 - 2009.
Licensed To: Township of Greenwood, County of Wexford, Michigan

*** Information herein deemed reliable but not guaranteed***

Building Type

X	Single Family
	Mobile Home
	Town Home
	Duplex
	A-Frame
X	Wood Frame

Building Style: PLAIN

Yr Built	Remodeled
0	0

Condition: Good

Room List

	Basement
	1st Floor
	2nd Floor
	Bedrooms

(1) Exterior

	Wood/Shingle
X	Aluminum/Vinyl
	Brick
X	Insulation

(2) Windows

X	Many Avg. Few	X	Large Avg. Small

	Wood Sash
	Metal Sash
X	Vinyl Sash
	Double Hung
	Horiz. Slide
	Casement
	Double Glass
	Patio Doors
X	Storms & Screens

(3) Roof

X	Gable Hip Flat		Gambrel Mansard Shed
X	Asphalt Shingle		

Chimney:

(3) Roof (cont.)

	Eavestrough
X	Insulation
0	Front Overhang
0	Other Overhang

(4) Interior

X	Drywall Paneled		Plaster Wood T&G

Trim & Decoration

	Ex	X	Ord		Min

Size of Closets

	Lg	X	Ord		Small

Doors:		Solid	X	H.C.	

(5) Floors

Kitchen:
Other: Linoleum
Other: Carpeted

(6) Ceilings

X	Drywall

(7) Excavation

Basement: 1152 S.F.
Crawl: 0 S.F.
Slab: 0 S.F.
Height to Joists: 0.0

(8) Basement

	Conc. Block
	Poured Conc.
	Stone
	Treated Wood
	Concrete Floor

(9) Basement Finish

	Recreation SF
	Living SF
	Walkout Doors (B)
	No Floor SF
	Walkout Doors (A)

(10) Floor Support

Joists:
Unsupported Len:
Cntr.Sup:

(11) Heating/Cooling

X	Gas Wood		Oil Coal		Elec. Steam	

	Forced Air w/o Ducts
X	Forced Air w/ Ducts
	Forced Hot Water
	Electric Baseboard
	Elec. Ceil. Radiant
	Radiant (in-floor)
	Electric Wall Heat
	Space Heater
	Wall/Floor Furnace
	Forced Heat & Cool
	Heat Pump
	No Heating/Cooling
	Central Air
	Wood Furnace

(12) Electric

150	Amps Service

No./Qual. of Fixtures

	Ex.	X	Ord.		Min

No. of Elec. Outlets

	Many	X	Ave.		Few

(13) Plumbing

1	Average Fixture(s)
	3 Fixture Bath
	2 Fixture Bath
	Softener, Auto
	Softener, Manual
	Solar Water Heat
	No Plumbing
	Extra Toilet
	Extra Sink
	Separate Shower
	Ceramic Tile Floor
	Ceramic Tile Wains
	Ceramic Tub Alcove
	Vent Fan

(14) Water/Sewer

	Public Water
	Public Sewer
1	Water Well
1	1000 Gal Septic
	2000 Gal Septic

Lump Sum Items:

(15) Built-ins

	Appliance Allow.
	Cook Top
	Dishwasher
	Garbage Disposal
	Bath Heater
	Vent Fan
	Hot Tub
	Unvented Hood
	Vented Hood
	Intercom
	Jacuzzi Tub
	Jacuzzi repl.Tub
	Oven
	Microwave
	Standard Range
	Self Clean Range
	Sauna
	Trash Compactor
	Central Vacuum
	Security System

(15) Fireplaces

	Interior 1 Story
	Interior 2 Story
	2nd/Same Stack
	Two Sided
	Exterior 1 Story
	Exterior 2 Story
	Prefab 1 Story
	Prefab 2 Story
	Heat Circulator
	Raised Hearth
	Wood Stove
	Direct-Vented Gas

Class: CD
Effec. Age: 60
Floor Area: 1,152
Total Base New : 208,518 E.C.F.
Total Depr Cost: 98,827 X 1.297
Estimated T.C.V: 128,178

(16) Porches/Decks

Area	Type
616	WPP

(17) Garage

Year Built:
Car Capacity:
Class: D
Exterior: Pole
Brick Ven.: 0
Stone Ven.: 0
Common Wall: Detache
Foundation: 18 Inch
Finished ?:
Auto. Doors: 0
Mech. Doors: 0
Area: 1600
% Good: 0
Storage Area: 0
No Conc. Floor: 1600

Bsmnt Garage:

Carport Area:
Roof:

Cost Est. for Res. Bldg: 1 Single Family PLAIN Cls CD Blt 0
(11) Heating System: Forced Air w/ Ducts
Ground Area = 1152 SF Floor Area = 1152 SF.
Phy/Ab.Phy/Func/Econ/Comb. % Good=45/100/100/100/45
Building Areas

Stories	Exterior	Foundation	Size	Cost New	Depr. Cost	
1 Story	Siding	Basement	1,152			
			Total:	153,062	68,877	
Other Additions/Adjustments						
Water/Sewer						
1000 Gal Septic			1	4,582	2,062	
Water Well, 100 Feet			1	5,680	2,556	
Porches						
WPP			616	9,135	4,111	
Garages						
Class: D Exterior: Pole (Unfinished)						
Base Cost			1600	30,768	13,846	
No Concrete Floor			1600	-8,976	-4,039	
Local Cost Items						
FREE STANDING ROOF			1280	9,267	7,414	*8
OUTSIDE FURNACE			1	5,000	4,000	*8
			Totals:	208,518	98,827	

Notes:
ECF (RESIDENTIAL) 1.297 => TCV: 128,178

*** Information herein deemed reliable but not guaranteed***

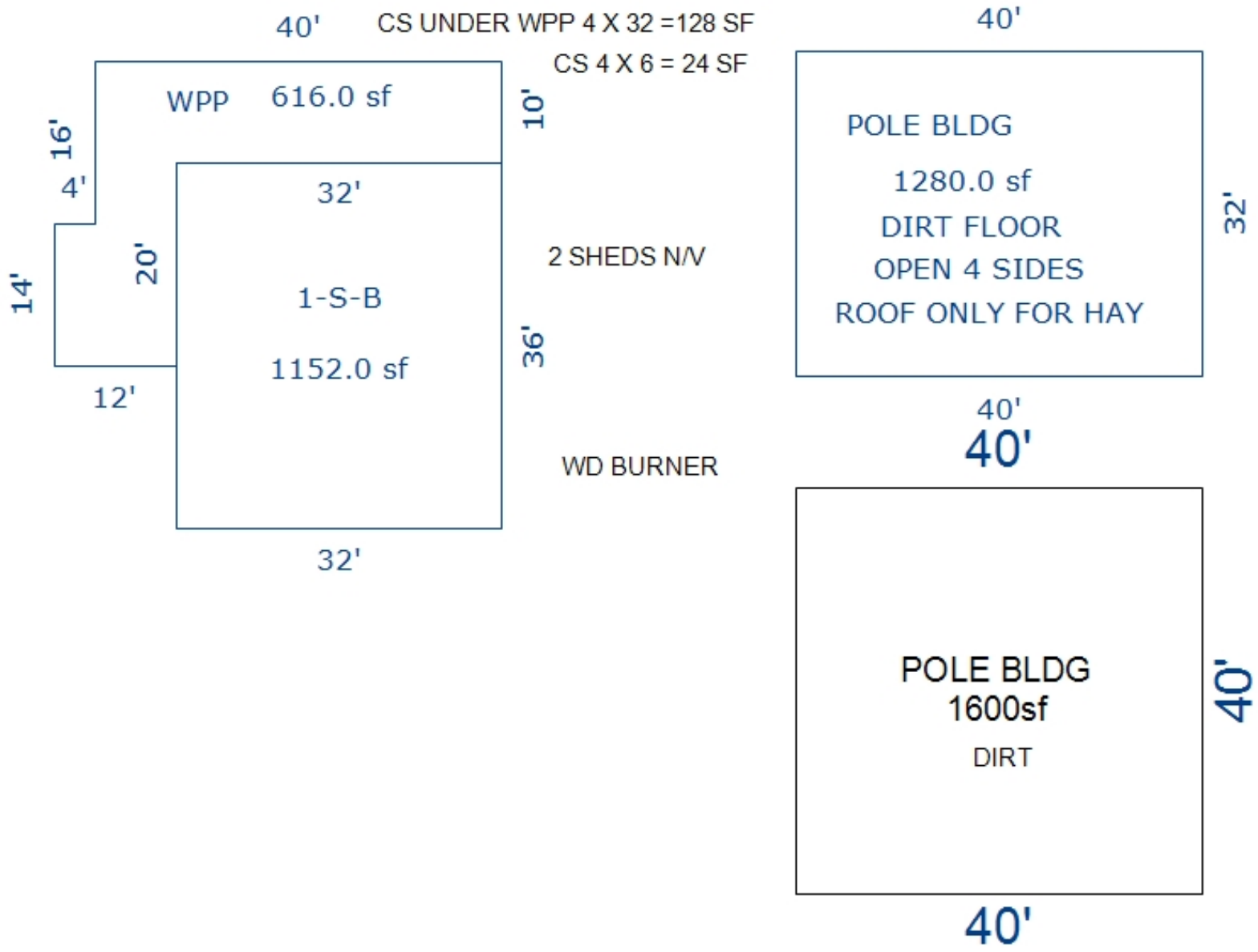

*** Information herein deemed reliable but not guaranteed***

Parcel Number: 2410-06-1102 Jurisdiction: GREENWOOD TWP County: WEXFORD Printed on 02/15/2024

Grantor	Grantee	Sale Price	Sale Date	Inst. Type	Terms of Sale	Liber & Page	Verified By	Prcnt. Trans.
HULETT, HARLEY & MARY C	HULETT, HARLEY & MARY C &	0	12/21/2010	QC	09-FAMILY	635/2818	DEED	0.0
HULETT, LUCILLE ESTATE	HULETT, HARLEY & MARY C	0	10/05/1993	WD	08-ESTATE	366/408	DEED	0.0

Property Address
880 E COUNTY LINE RD

Owner's Name/Address
HULETT, HARLEY & MARY C
& ROBERT HULETT
880 E COUNTY LINE RD
KINGSLEY MI 49649

Tax Description
W 1/2 OF E 1/2 OF E 1/2 OF FRL NE 1/4 22 A. M/L GW. SEC. 6 T24N R10W- KINGSLEY-

Comments/Influences

Class: RESIDENTIAL-IMPROV Zoning:
School: KINGSLEY AREA SCHOOL
P.R.E. 100% / /
:
2024 Est TCV 152,810 TCV/TFA: 142.55

Building Permit(s)	Date	Number	Status

X Improved | Vacant

	Public Improvements
	Dirt Road
	Gravel Road
X	Paved Road
	Storm Sewer
	Sidewalk
	Water
	Sewer
X	Electric
	Gas
	Curb
	Street Lights
	Standard Utilities
	Underground Utils.

	Topography of Site
X	Level
X	Rolling
	Low
	High
	Landscaped
	Swamp
X	Wooded
	Pond
	Waterfront
	Ravine
	Wetland
	Flood Plain
X	OPEN/PINES

Who	When	What
GLA	10/31/2022	INSPECTION
GLA	03/22/2014	INSPECTION
GLA	05/05/2016	INSPECTION

Land Value Estimates for Land Table 4010.LAND VALUES

Description	Frontage	Depth	* Factors * Front	Depth	Rate	%Adj.	Reason	Value
ACREAGE			21.740	Acres	3,009	100		65,409
ROW			0.260	Acres	0	100		0
			22.00	Total Acres	Total Est. Land Value =			65,409

Year	Land Value	Building Value	Assessed Value	Board of Review	Tribunal/ Other	Taxable Value
2024	32,700	43,700	76,400			25,058C
2023	27,800	35,900	63,700			23,865C
2022	23,900	0	23,900			13,718C
2021	21,700	0	21,700			13,280C

The Equalizer. Copyright (c) 1999 - 2009.
Licensed To: Township of Greenwood, County of Wexford, Michigan

*** Information herein deemed reliable but not guaranteed***

Building Type

X	Single Family
	Mobile Home
	Town Home
	Duplex
	A-Frame
X	Wood Frame

Building Style: PLAIN

Yr Built	Remodeled
0	0

Condition: Good

Room List

	Basement
	1st Floor
	2nd Floor
	Bedrooms

(1) Exterior

	Wood/Shingle
X	Aluminum/Vinyl
	Brick
X	Insulation

(2) Windows

	Many		Large
X	Avg.	X	Avg.
	Few		Small

	Wood Sash
	Metal Sash
X	Vinyl Sash
	Double Hung
	Horiz. Slide
	Casement
	Double Glass
	Patio Doors
X	Storms & Screens

(3) Roof

X	Gable		Gambrel
	Hip		Mansard
	Flat		Shed

X	Asphalt Shingle

Chimney:

(3) Roof (cont.)

	Eavestrough
X	Insulation
0	Front Overhang
0	Other Overhang

(4) Interior

X	Drywall		Plaster
	Paneled		Wood T&G

Trim & Decoration

	Ex	X	Ord		Min

Size of Closets

	Lg	X	Ord		Small

Doors:		Solid	X	H.C.	

(5) Floors

Kitchen:
Other: Linoleum
Other: Carpeted

(6) Ceilings

X	Drywall

(7) Excavation

Basement: 0 S.F.
Crawl: 1072 S.F.
Slab: 0 S.F.
Height to Joists: 0.0

(8) Basement

	Conc. Block
	Poured Conc.
	Stone
	Treated Wood
	Concrete Floor

(9) Basement Finish

	Recreation SF
	Living SF
	Walkout Doors (B)
	No Floor SF
	Walkout Doors (A)

(10) Floor Support

Joists:
Unsupported Len:
Cntr.Sup:

(11) Heating/Cooling

X	Gas		Oil		Elec.
	Wood		Coal		Steam

	Forced Air w/o Ducts
X	Forced Air w/ Ducts
	Forced Hot Water
	Electric Baseboard
	Elec. Ceil. Radiant
	Radiant (in-floor)
	Electric Wall Heat
	Space Heater
	Wall/Floor Furnace
	Forced Heat & Cool
	Heat Pump
	No Heating/Cooling

	Central Air
	Wood Furnace

(12) Electric

150	Amps Service

No./Qual. of Fixtures

	Ex.	X	Ord.		Min

No. of Elec. Outlets

	Many	X	Ave.		Few

(13) Plumbing

	Average Fixture(s)
1	3 Fixture Bath
	2 Fixture Bath
	Softener, Auto
	Softener, Manual
	Solar Water Heat
	No Plumbing
	Extra Toilet
	Extra Sink
	Separate Shower
	Ceramic Tile Floor
	Ceramic Tile Wains
	Ceramic Tub Alcove
	Vent Fan

(14) Water/Sewer

	Public Water
	Public Sewer
1	Water Well
1	1000 Gal Septic
	2000 Gal Septic

Lump Sum Items:

(15) Built-ins

	Appliance Allow.
	Cook Top
	Dishwasher
	Garbage Disposal
	Bath Heater
	Vent Fan
	Hot Tub
	Unvented Hood
	Vented Hood
	Intercom
	Jacuzzi Tub
	Jacuzzi repl.Tub
	Oven
	Microwave
	Standard Range
	Self Clean Range
	Sauna
	Trash Compactor
	Central Vacuum
	Security System

(15) Fireplaces

	Interior 1 Story
	Interior 2 Story
	2nd/Same Stack
	Two Sided
	Exterior 1 Story
	Exterior 2 Story
	Prefab 1 Story
	Prefab 2 Story
	Heat Circulator
	Raised Hearth
	Wood Stove
	Direct-Vented Gas

Class: D
Effec. Age: 51
Floor Area: 1,072
Total Base New : 137,522 E.C.F.
Total Depr Cost: 67,387 X 1.297
Estimated T.C.V: 87,401

(16) Porches/Decks

Area	Type
128	WGEP (1 Story)
64	WPP

(17) Garage

Year Built:
Car Capacity:
Class:
Exterior:
Brick Ven.:
Stone Ven.:
Common Wall:
Foundation:
Finished ?:
Auto. Doors:
Mech. Doors:
Area:
% Good:
Storage Area:
No Conc. Floor:

Bsmnt Garage:

Carport Area:
Roof:

Cost Est. for Res. Bldg: 1 Single Family PLAIN Cls D Blt 0
(11) Heating System: Forced Air w/ Ducts
Ground Area = 1072 SF Floor Area = 1072 SF.
Phy/Ab.Phy/Func/Econ/Comb. % Good=49/100/100/100/49
Building Areas

Stories	Exterior	Foundation	Size	Cost New	Depr. Cost
1 Story	Siding	Crawl Space	1,072		
			Total:	116,118	56,898
Other Additions/Adjustments					
Water/Sewer					
1000 Gal Septic			1	4,293	2,104
Water Well, 100 Feet			1	5,545	2,717
Porches					
WGEP (1 Story)			128	9,620	4,714
WPP			64	1,946	954
			Totals:	137,522	67,387

Notes:

ECF (RESIDENTIAL) 1.297 => TCV: 87,401

*** Information herein deemed reliable but not guaranteed***

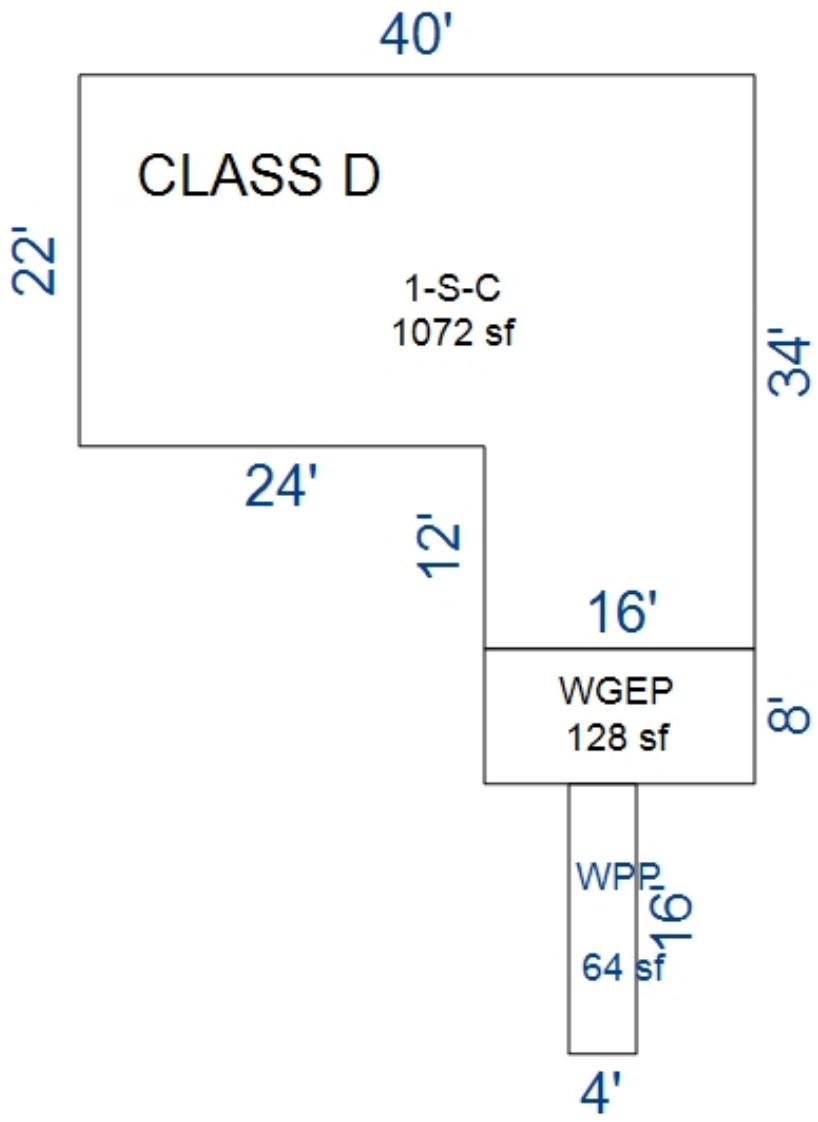

*** Information herein deemed reliable but not guaranteed***

Parcel Number: 2410-06-1103 Jurisdiction: GREENWOOD TWP County: WEXFORD Printed on 02/15/2024

Grantor	Grantee	Sale Price	Sale Date	Inst. Type	Terms of Sale	Liber & Page	Verified By	Prcnt. Trans.
WELLS FARGO BANK NA	SHAFFER, REBECCA	110,000	05/12/2009	WD	11-FROM LENDING INSTITUTI	623/1061	DEED	100.0
DEROSHA, RALPH & LYNN	WELLS FARGO BANK NA	204,901	02/22/2008	SD	10-FORECLOSURE	608/2572	DEED	0.0

Property Address

830 E COUNTY LINE RD

Owner's Name/Address

SHAFFER, REBECCA
830 E COUNTY LINE RD
KINGSLEY MI 49649

Tax Description

E 1/2 OF W 1/2 OF E 1/2 OF FRL NE 1/4 22 A. M/L GW. SEC. 6 T24N R10W -KINGSLEY-

Comments/Influences

Class: RESIDENTIAL-IMPROV Zoning:

School: KINGSLEY AREA SCHOOL

P.R.E. 100% / /

:

2024 Est TCV 285,119 TCV/TFA: 180.91

Building Permit(s)	Date	Number	Status
RESIDENTIAL - REMODEL	11/02/2001	PB10670	

X	Improved		Vacant

	Public Improvements
	Dirt Road
	Gravel Road
X	Paved Road
	Storm Sewer
	Sidewalk
	Water
	Sewer
X	Electric
	Gas
	Curb
	Street Lights
	Standard Utilities
	Underground Utils.

	Topography of Site
X	Level
X	Rolling
	Low
	High
	Landscaped
	Swamp
X	Wooded
	Pond
	Waterfront
	Ravine
	Wetland
	Flood Plain
X	OPEN/PINES

Who	When	What
GLA	05/05/2016	INSPECTION

Land Value Estimates for Land Table 4010.LAND VALUES

Description	Frontage	Depth	* Factors * Front	Depth	Rate	%Adj.	Reason	Value
ACREAGE			21.740 Acres		3,009	100		65,409
ROW			0.260 Acres		0	100		0
			22.00 Total Acres		Total Est. Land Value =			65,409

Land Improvement Cost Estimates

Description	Rate	Size	% Good	Cash Value
D/W/P: 4in Concrete	7.01	300	45	946
D/W/P: 4in Concrete	7.01	96	45	303
Wood Frame	26.52	160	43	1,824
Total Estimated Land Improvements True Cash Value =				3,073

Year	Land Value	Building Value	Assessed Value	Board of Review	Tribunal/ Other	Taxable Value
2024	32,700	109,900	142,600			86,857C
2023	27,800	90,000	117,800			82,721C
2022	23,900	76,100	100,000			78,782C
2021	21,700	77,000	98,700			76,266C

The Equalizer. Copyright (c) 1999 - 2009.
Licensed To: Township of Greenwood, County of Wexford, Michigan

*** Information herein deemed reliable but not guaranteed***

Building Type

X	Single Family
	Mobile Home
	Town Home
	Duplex
	A-Frame
X	Wood Frame

Building Style: PLAIN

Yr Built	Remodeled
1990	0

Condition: Good

Room List

	Basement
	1st Floor
	2nd Floor
	Bedrooms

(1) Exterior

	Wood/Shingle
X	Aluminum/Vinyl
	Brick
X	Insulation

(2) Windows

X	Many Avg. Few	X	Large Avg. Small

	Wood Sash
	Metal Sash
X	Vinyl Sash
	Double Hung
	Horiz. Slide
	Casement
	Double Glass
	Patio Doors
X	Storms & Screens

(3) Roof

X	Gable		Gambrel
	Hip		Mansard
	Flat		Shed

X	Asphalt Shingle

Chimney:

(3) Roof (cont.)

	Eavestrough
X	Insulation
0	Front Overhang
0	Other Overhang

(4) Interior

X	Drywall Paneled		Plaster Wood T&G

Trim & Decoration

	Ex	X	Ord		Min

Size of Closets

	Lg	X	Ord		Small

Doors: | | Solid | X | H.C.

(5) Floors

Kitchen:
Other: Linoleum
Other: Carpeted

(6) Ceilings

X	Drywall

(7) Excavation

Basement: 792 S.F.
Crawl: 784 S.F.
Slab: 0 S.F.
Height to Joists: 0.0

(8) Basement

	Conc. Block
	Poured Conc.
	Stone
	Treated Wood
	Concrete Floor

(9) Basement Finish

	Recreation SF
	Living SF
	Walkout Doors (B)
	No Floor SF
	Walkout Doors (A)

(10) Floor Support

Joists:
Unsupported Len:
Cntr.Sup:

(11) Heating/Cooling

X	Gas		Oil		Elec.
	Wood		Coal		Steam

	Forced Air w/o Ducts
X	Forced Air w/ Ducts
	Forced Hot Water
	Electric Baseboard
	Elec. Ceil. Radiant
	Radiant (in-floor)
	Electric Wall Heat
	Space Heater
	Wall/Floor Furnace
	Forced Heat & Cool
	Heat Pump
	No Heating/Cooling

	Central Air
	Wood Furnace

(12) Electric

150	Amps Service

No./Qual. of Fixtures

	Ex.	X	Ord.		Min

No. of Elec. Outlets

	Many	X	Ave.		Few

(13) Plumbing

1	Average Fixture(s)
	3 Fixture Bath
	2 Fixture Bath
	Softener, Auto
	Softener, Manual
	Solar Water Heat
	No Plumbing
	Extra Toilet
	Extra Sink
	Separate Shower
	Ceramic Tile Floor
	Ceramic Tile Wains
	Ceramic Tub Alcove
	Vent Fan

(14) Water/Sewer

	Public Water
	Public Sewer
1	Water Well
1	1000 Gal Septic
	2000 Gal Septic

Lump Sum Items:

(15) Built-ins

	Appliance Allow.
	Cook Top
	Dishwasher
	Garbage Disposal
	Bath Heater
	Vent Fan
	Hot Tub
	Unvented Hood
	Vented Hood
	Intercom
	Jacuzzi Tub
	Jacuzzi repl.Tub
	Oven
	Microwave
	Standard Range
	Self Clean Range
	Sauna
	Trash Compactor
	Central Vacuum
	Security System

(15) Fireplaces

	Interior 1 Story
	Interior 2 Story
	2nd/Same Stack
	Two Sided
	Exterior 1 Story
	Exterior 2 Story
	Prefab 1 Story
	Prefab 2 Story
	Heat Circulator
	Raised Hearth
	Wood Stove
	Direct-Vented Gas

Class: CD
Effec. Age: 33
Floor Area: 1,576
Total Base New : 249,298 E.C.F.
Total Depr Cost: 167,029 X 1.297
Estimated T.C.V: 216,637

(16) Porches/Decks

Area	Type
144	WGEP (1 Story)
84	WCP (1 Story)
196	WSEP (1 Story)

(17) Garage

Year Built:
Car Capacity:
Class: CD
Exterior: Pole
Brick Ven.: 0
Stone Ven.: 0
Common Wall: Detache
Foundation: 18 Inch
Finished ?:
Auto. Doors: 0
Mech. Doors: 0
Area: 1104
% Good: 0
Storage Area: 0
No Conc. Floor: 0

Bsmnt Garage:

Carport Area:
Roof:

Cost Est. for Res. Bldg: 1 Single Family PLAIN Cls CD Blt 1990
(11) Heating System: Forced Air w/ Ducts
Ground Area = 1576 SF Floor Area = 1576 SF.
Phy/Ab.Phy/Func/Econ/Comb. % Good=67/100/100/100/67

Building Areas

Stories	Exterior	Foundation	Size	Cost New	Depr. Cost
1 Story	Siding	Basement	792		
1 Story	Siding	Crawl Space	784		
			Total:	190,833	127,858

Other Additions/Adjustments

Water/Sewer			
1000 Gal Septic	1	4,582	3,070
Water Well, 100 Feet	1	5,680	3,806
Porches			
WGEP (1 Story)	144	11,220	7,517
WCP (1 Story)	84	3,963	2,655
WSEP (1 Story)	196	9,008	6,035
Garages			
Class: CD Exterior: Pole (Unfinished)			
Base Cost	1104	24,012	16,088
	Totals:	249,298	167,029

Notes:

ECF (RESIDENTIAL) 1.297 => TCV: 216,637

*** Information herein deemed reliable but not guaranteed***

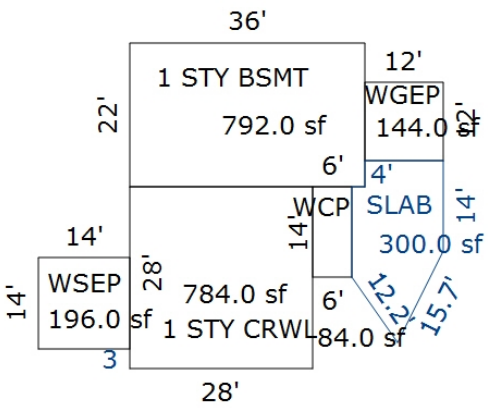

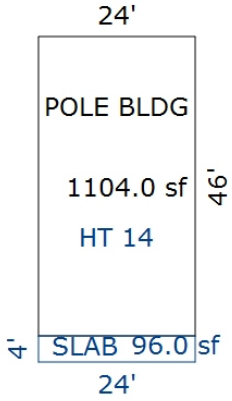

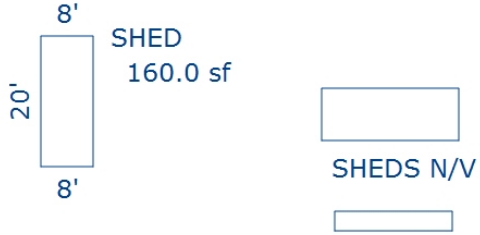

Sketch by Apex Sketch

*** Information herein deemed reliable but not guaranteed***

Parcel Number: 2410-06-1104 Jurisdiction: GREENWOOD TWP County: WEXFORD Printed on 02/15/2024

Grantor	Grantee	Sale Price	Sale Date	Inst. Type	Terms of Sale	Liber & Page	Verified By	Prcnt. Trans.

Property Address	Class: RESIDENTIAL-IMPROV	Zoning:	Building Permit(s)	Date	Number	Status
740 E COUNTY LINE RD	School: KINGSLEY AREA SCHOOL		RESIDENTIAL - REMODEL	02/11/2000	PM3974	
	P.R.E. 100% / /		RESIDENTIAL - REMODEL	10/13/1999	PM3593	
Owner's Name/Address	:					
HULETT, RANDEL L & PATSY R 740 E COUNTY LINE RD KINGSLEY MI 49649	2024 Est TCV 197,793 TCV/TFA: 206.03					

X Improved | Vacant

Land Value Estimates for Land Table 4010.LAND VALUES

Description	Frontage	Depth	* Factors * Front	Depth	Rate	%Adj.	Reason	Value
ACREAGE			21.740 Acres		3,009	100		65,409
ROW			0.260 Acres		0	100		0
			22.00 Total Acres		Total Est. Land Value =			65,409

Land Improvement Cost Estimates

Description	Rate	Size	% Good	Cash Value
Wood Frame	19.68	200	43	1,692
Total Estimated Land Improvements True Cash Value =				1,692

Public Improvements

- [ ] Dirt Road
- [ ] Gravel Road
- [X] Paved Road
- [ ] Storm Sewer
- [ ] Sidewalk
- [ ] Water
- [ ] Sewer
- [X] Electric
- [ ] Gas
- [ ] Curb
- [ ] Street Lights
- [ ] Standard Utilities
- [ ] Underground Utils.

Topography of Site

- [X] Level
- [X] Rolling
- [ ] Low
- [ ] High
- [ ] Landscaped
- [ ] Swamp
- [X] Wooded
- [ ] Pond
- [ ] Waterfront
- [ ] Ravine
- [ ] Wetland
- [ ] Flood Plain
- [X] OPEN/PINES

Tax Description

W 1/2 OF W 1/2 OF E 1/2 OF FRL NE 1/4 22 A. M/L GW. SEC. 6 T24N R10W -KINGSLEY-

Comments/Influences

The Equalizer. Copyright (c) 1999 - 2009. Licensed To: Township of Greenwood, County of Wexford, Michigan

Who	When	What
GLA	05/05/2016	INSPECTION

Year	Land Value	Building Value	Assessed Value	Board of Review	Tribunal/ Other	Taxable Value
2024	32,700	66,200	98,900			33,243C
2023	27,800	54,200	82,000			31,660C
2022	23,900	45,800	69,700			30,153C
2021	21,700	46,400	68,100			29,190C

*** Information herein deemed reliable but not guaranteed***

Building Type

X	Single Family
	Mobile Home
	Town Home
	Duplex
	A-Frame
X	Wood Frame

Building Style: PLAIN

Yr Built	Remodeled
0	1990

Condition: Good

Room List

	Basement
	1st Floor
	2nd Floor
	Bedrooms

(1) Exterior

	Wood/Shingle
X	Aluminum/Vinyl
	Brick
X	Insulation

(2) Windows

	Many		Large
X	Avg.	X	Avg.
	Few		Small

	Wood Sash
	Metal Sash
X	Vinyl Sash
	Double Hung
	Horiz. Slide
	Casement
	Double Glass
	Patio Doors
X	Storms & Screens

(3) Roof

X	Gable		Gambrel
	Hip		Mansard
	Flat		Shed

X	Asphalt Shingle

Chimney:

(3) Roof (cont.)

	Eavestrough
X	Insulation
0	Front Overhang
0	Other Overhang

(4) Interior

X	Drywall		Plaster
	Paneled		Wood T&G

Trim & Decoration

	Ex	X	Ord		Min

Size of Closets

	Lg	X	Ord		Small

Doors:		Solid	X	H.C.	

(5) Floors

Kitchen:
Other: Linoleum
Other: Carpeted

(6) Ceilings

X	Drywall		

(7) Excavation

Basement: 960 S.F.
Crawl: 0 S.F.
Slab: 0 S.F.
Height to Joists: 0.0

(8) Basement

	Conc. Block
	Poured Conc.
	Stone
	Treated Wood
	Concrete Floor

(9) Basement Finish

	Recreation SF
	Living SF
	Walkout Doors (B)
	No Floor SF
	Walkout Doors (A)

(10) Floor Support

Joists:
Unsupported Len:
Cntr.Sup:

(11) Heating/Cooling

X	Gas		Oil		Elec.
	Wood		Coal		Steam

	Forced Air w/o Ducts
X	Forced Air w/ Ducts
	Forced Hot Water
	Electric Baseboard
	Elec. Ceil. Radiant
	Radiant (in-floor)
	Electric Wall Heat
	Space Heater
	Wall/Floor Furnace
	Forced Heat & Cool
	Heat Pump
	No Heating/Cooling

	Central Air
	Wood Furnace

(12) Electric

150	Amps Service

No./Qual. of Fixtures

	Ex.	X	Ord.		Min

No. of Elec. Outlets

	Many	X	Ave.		Few

(13) Plumbing

	Average Fixture(s)
1	3 Fixture Bath
	2 Fixture Bath
	Softener, Auto
	Softener, Manual
	Solar Water Heat
	No Plumbing
	Extra Toilet
	Extra Sink
	Separate Shower
	Ceramic Tile Floor
	Ceramic Tile Wains
	Ceramic Tub Alcove
	Vent Fan

(14) Water/Sewer

	Public Water
	Public Sewer
1	Water Well
1	1000 Gal Septic
	2000 Gal Septic

Lump Sum Items:

(15) Built-ins

	Appliance Allow.
	Cook Top
	Dishwasher
	Garbage Disposal
	Bath Heater
	Vent Fan
	Hot Tub
	Unvented Hood
	Vented Hood
	Intercom
	Jacuzzi Tub
	Jacuzzi repl.Tub
	Oven
	Microwave
	Standard Range
	Self Clean Range
	Sauna
	Trash Compactor
	Central Vacuum
	Security System

(15) Fireplaces

	Interior 1 Story
	Interior 2 Story
	2nd/Same Stack
	Two Sided
	Exterior 1 Story
	Exterior 2 Story
	Prefab 1 Story
	Prefab 2 Story
	Heat Circulator
	Raised Hearth
	Wood Stove
	Direct-Vented Gas

Class: D
Effec. Age: 33
Floor Area: 960
Total Base New : 150,396 E.C.F.
Total Depr Cost: 100,765 X 1.297
Estimated T.C.V: 130,692

(16) Porches/Decks

Area	Type
376	WCP (1 Story)

(17) Garage

Year Built:
Car Capacity:
Class: D
Exterior: Pole
Brick Ven.: 0
Stone Ven.: 0
Common Wall: Detache
Foundation: 18 Inch
Finished ?:
Auto. Doors: 0
Mech. Doors: 0
Area: 672
% Good: 0
Storage Area: 0
No Conc. Floor: 672

Bsmnt Garage:

Carport Area:
Roof:

Cost Est. for Res. Bldg: 1 Single Family PLAIN Cls D Blt 0
(11) Heating System: Forced Air w/ Ducts
Ground Area = 960 SF Floor Area = 960 SF.
Phy/Ab.Phy/Func/Econ/Comb. % Good=67/100/100/100/67
Building Areas

Stories	Exterior	Foundation	Size	Cost New	Depr. Cost
1 Story	Siding	Basement	960		
			Total:	119,920	80,346
Other Additions/Adjustments					
Water/Sewer					
1000 Gal Septic			1	4,293	2,876
Water Well, 100 Feet			1	5,545	3,715
Porches					
WCP (1 Story)			376	9,859	6,606
Garages					
Class: D Exterior: Pole (Unfinished)					
Base Cost			672	14,549	9,748
No Concrete Floor			672	-3,770	-2,526
			Totals:	150,396	100,765

Notes:
ECF (RESIDENTIAL) 1.297 => TCV: 130,692

*** Information herein deemed reliable but not guaranteed***

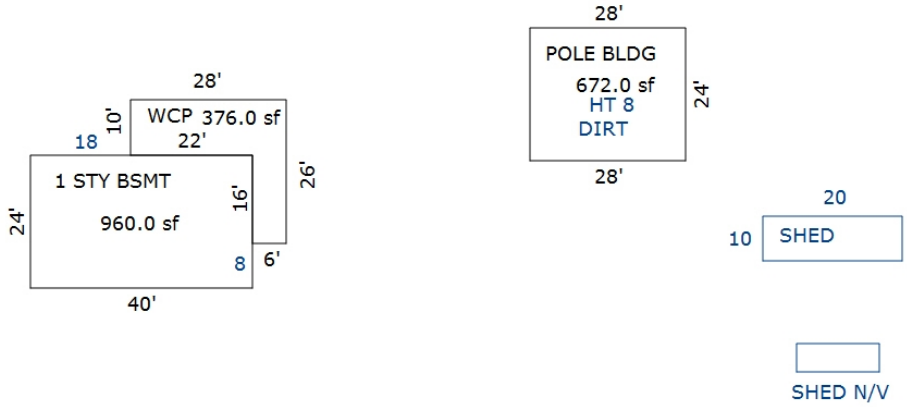

Sketch by Apex Sketch

*** Information herein deemed reliable but not guaranteed***

Parcel Number: 2410-06-1201 Jurisdiction: GREENWOOD TWP County: WEXFORD Printed on 02/15/2024

Grantor	Grantee	Sale Price	Sale Date	Inst. Type	Terms of Sale	Liber & Page	Verified By	Prcnt. Trans.
HULETT, DENNIS	HULETT, MICHELLE	1	06/27/2017	QC	09-FAMILY	6801/690	DEED	0.0
HULETT, LUCILLE 06%	HULETT, DENNIS	4,500	02/03/1987	LC	03-ARM'S LENGTH	305:446	DEED	0.0

Property Address

526 E COUNTY LINE RD

Owner's Name/Address

HULETT, MICHELLE
538 COUNTY LINE RD
KINGSLEY MI 49649

Tax Description

W 1/8 OF FRL NE 1/4 EXC PAR COMAT N 1/4 COR OF SEC; E 327.99 FT; S 475 FT TO POB: S 450 FT; W 100 FT; N 450 FT; E 100 FT TO POB. --20.97 A M/L-- GW. SEC. 6 T24N R10W -KINGSLEY-

Comments/Influences

Class: RESIDENTIAL-IMPROV Zoning:

School: KINGSLEY AREA SCHOOL

P.R.E. 52% 03/20/2019

:

2024 Est TCV 121,416 TCV/TFA: 133.13

Building Permit(s)	Date	Number	Status

X	Improved		Vacant

	Public Improvements
	Dirt Road
	Gravel Road
X	Paved Road
	Storm Sewer
	Sidewalk
	Water
	Sewer
X	Electric
	Gas
	Curb
	Street Lights
	Standard Utilities
	Underground Utils.

	Topography of Site
	Level
X	Rolling
	Low
	High
	Landscaped
	Swamp
X	Wooded
	Pond
	Waterfront
	Ravine
	Wetland
	Flood Plain
X	OPEN/PINES

Who	When	What
GLA	05/05/2016	INSPECTION

Land Value Estimates for Land Table 4010.LAND VALUES

Description	Frontage	Depth	* Factors * Front	Depth	Rate	%Adj.	Reason	Value
ACREAGE			21.890	Acres	2,994	100		65,531
ROW			0.260	Acres	0	100		0
			22.15	Total Acres	Total Est. Land Value =			65,531

Year	Land Value	Building Value	Assessed Value	Board of Review	Tribunal/ Other	Taxable Value
2024	32,800	27,900	60,700			41,734C
2023	28,000	22,500	50,500			39,747C
2022	24,100	18,700	42,800			37,855C
2021	21,900	18,700	40,600			36,646C

The Equalizer. Copyright (c) 1999 - 2009.
Licensed To: Township of Greenwood, County of Wexford, Michigan

*** Information herein deemed reliable but not guaranteed***

Building Type

X	Single Family
	Mobile Home
	Town Home
	Duplex
	A-Frame
X	Wood Frame

Building Style: PLAIN

Yr Built	Remodeled
0	1975

Condition: Good

Room List

	Basement
	1st Floor
	2nd Floor
	Bedrooms

(1) Exterior

	Wood/Shingle
X	Aluminum/Vinyl
	Brick
X	Insulation

(2) Windows

	Many		Large
X	Avg.	X	Avg.
	Few		Small

	Wood Sash
	Metal Sash
X	Vinyl Sash
	Double Hung
	Horiz. Slide
	Casement
	Double Glass
	Patio Doors
X	Storms & Screens

(3) Roof

X	Gable		Gambrel
	Hip		Mansard
	Flat		Shed

X	Asphalt Shingle

Chimney:

(3) Roof (cont.)

	Eavestrough
X	Insulation
0	Front Overhang
0	Other Overhang

(4) Interior

X	Drywall		Plaster
	Paneled		Wood T&G

Trim & Decoration

	Ex	X	Ord		Min

Size of Closets

	Lg	X	Ord		Small

Doors:		Solid	X	H.C.	

(5) Floors

Kitchen:
Other: Linoleum
Other: Carpeted

(6) Ceilings

X	Drywall		

(7) Excavation

Basement: 912 S.F.
Crawl: 0 S.F.
Slab: 0 S.F.
Height to Joists: 0.0

(8) Basement

	Conc. Block
	Poured Conc.
	Stone
	Treated Wood
	Concrete Floor

(9) Basement Finish

	Recreation SF
	Living SF
	Walkout Doors (B)
	No Floor SF
	Walkout Doors (A)

(10) Floor Support

Joists:
Unsupported Len:
Cntr.Sup:

(11) Heating/Cooling

X	Gas		Oil		Elec.
	Wood		Coal		Steam

	Forced Air w/o Ducts
X	Forced Air w/ Ducts
	Forced Hot Water
	Electric Baseboard
	Elec. Ceil. Radiant
	Radiant (in-floor)
	Electric Wall Heat
	Space Heater
	Wall/Floor Furnace
	Forced Heat & Cool
	Heat Pump
	No Heating/Cooling

	Central Air
	Wood Furnace

(12) Electric

150	Amps Service

No./Qual. of Fixtures

	Ex.	X	Ord.		Min

No. of Elec. Outlets

	Many	X	Ave.		Few

(13) Plumbing

1	Average Fixture(s)
	3 Fixture Bath
	2 Fixture Bath
	Softener, Auto
	Softener, Manual
	Solar Water Heat
	No Plumbing
	Extra Toilet
	Extra Sink
	Separate Shower
	Ceramic Tile Floor
	Ceramic Tile Wains
	Ceramic Tub Alcove
	Vent Fan

(14) Water/Sewer

	Public Water
	Public Sewer
1	Water Well
1	1000 Gal Septic
	2000 Gal Septic

Lump Sum Items:

(15) Built-ins

	Appliance Allow.
	Cook Top
	Dishwasher
	Garbage Disposal
	Bath Heater
	Vent Fan
	Hot Tub
	Unvented Hood
	Vented Hood
	Intercom
	Jacuzzi Tub
	Jacuzzi repl.Tub
	Oven
	Microwave
	Standard Range
	Self Clean Range
	Sauna
	Trash Compactor
	Central Vacuum
	Security System

(15) Fireplaces

	Interior 1 Story
	Interior 2 Story
	2nd/Same Stack
	Two Sided
	Exterior 1 Story
	Exterior 2 Story
	Prefab 1 Story
	Prefab 2 Story
	Heat Circulator
	Raised Hearth
	Wood Stove
	Direct-Vented Gas

Class: D
Effec. Age: 60
Floor Area: 912
Total Base New : 127,667 E.C.F.
Total Depr Cost: 43,088 X 1.297
Estimated T.C.V: 55,885

(16) Porches/Decks

Area	Type

(17) Garage

Year Built:
Car Capacity:
Class:
Exterior:
Brick Ven.:
Stone Ven.:
Common Wall:
Foundation:
Finished ?:
Auto. Doors:
Mech. Doors:
Area:
% Good:
Storage Area:
No Conc. Floor:

Bsmnt Garage:

Carport Area:
Roof:

Cost Est. for Res. Bldg: 1 Single Family PLAIN Cls D Blt 0
(11) Heating System: Forced Air w/ Ducts
Ground Area = 912 SF Floor Area = 912 SF.
Phy/Ab.Phy/Func/Econ/Comb. % Good=45/75/100/100/33.75
Building Areas

Stories	Exterior	Foundation	Size	Cost New	Depr. Cost
1 Story	Siding	Basement	912		
			Total:	115,192	38,878

Other Additions/Adjustments

Water/Sewer			
1000 Gal Septic	1	4,293	1,449
Water Well, 150 Feet	1	8,182	2,761
	Totals:	127,667	43,088

Notes:

ECF (RESIDENTIAL) 1.297 => TCV: 55,885

*** Information herein deemed reliable but not guaranteed***

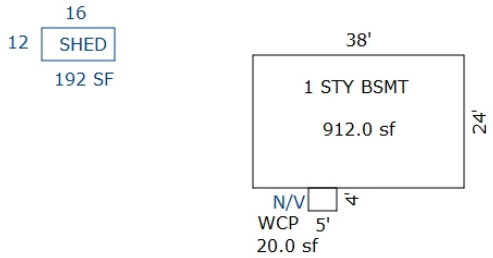

Sketch by Apex Sketch

*** Information herein deemed reliable but not guaranteed***

Parcel Number: 2410-06-1202 Jurisdiction: GREENWOOD TWP County: WEXFORD Printed on 02/15/2024

Grantor	Grantee	Sale Price	Sale Date	Inst. Type	Terms of Sale	Liber & Page	Verified By	Prcnt. Trans.
STRICKLAND, ANITA	TORRES, NATASHA & STRICKLA	0	05/20/2015	QC	09-FAMILY	675/814	DEED	0.0
RAYMER, CLIVE SURV OF DAWN	STRICKLAND, ANITA	0	10/15/2013	QC	09-FAMILY	663/1536	DEED	100.0
INGERSOL, DAWN AKA RAYMER	RAYMER, DAWN & CLIVE ETAL	0	11/15/2010	QC	21-NOT USED/OTHER	634/2707	DEED	0.0
HULETT, LUCILLE	INGERSOL ET AL, DAWN	4,500	02/03/1987	LC	03-ARM'S LENGTH	308:975	DEED	0.0

Property Address

568 E COUNTY LINE RD

Owner's Name/Address

TORRES, NATASHA & STRICKLAND, ANITA
568 E COUNTY LINE RD
KINGSLEY MI 49649

Tax Description

PAR B-1; COM AT N 1/4 COR OF SEC; E 327.99 FT TO POB: E 327.99 FT; S 503.96 FT; W 328.11 FT; N 492.72 FT TO POB. 3.75 A M/L-- SUB TO EASMT GW. SEC. 6 T24N R10W -KINGSLEY-

Comments/Influences

Class: RESIDENTIAL-IMPROV Zoning:

School: KINGSLEY AREA SCHOOL

P.R.E. 100% 03/07/2022

:

2024 Est TCV 165,087 TCV/TFA: 191.07

Building Permit(s)	Date	Number	Status
Garage, Detached	09/27/2021	PB21-00001	COMPLETE

X Improved | Vacant

	Public Improvements
	Dirt Road
	Gravel Road
X	Paved Road
	Storm Sewer
	Sidewalk
	Water
	Sewer
X	Electric
	Gas
	Curb
	Street Lights
	Standard Utilities
	Underground Utils.

	Topography of Site
X	Level
X	Rolling
	Low
	High
	Landscaped
	Swamp
X	Wooded
	Pond
	Waterfront
	Ravine
	Wetland
	Flood Plain
X	OPEN/PINES

Who	When	What
GLA	05/05/2016	INSPECTION

Land Value Estimates for Land Table 4010.LAND VALUES

Description	Frontage	Depth	* Factors * Front	Depth	Rate	%Adj.	Reason	Value
ACREAGE			3.490 Acres		5,256	100		18,344
ROW			0.260 Acres		0	100		0
			3.75 Total Acres		Total Est. Land Value =			18,344

Land Improvement Cost Estimates

Description	Rate	Size	% Good	Cash Value
Wood Frame	25.17	192	43	2,078
Total Estimated Land Improvements True Cash Value =				2,078

Year	Land Value	Building Value	Assessed Value	Board of Review	Tribunal/ Other	Taxable Value
2024	9,200	73,300	82,500			53,779C
2023	8,200	60,100	68,300			51,219C
2022	6,700	50,900	57,600	57,600M		48,780C
2021	7,300	39,200	46,500			34,541C

The Equalizer. Copyright (c) 1999 - 2009. Licensed To: Township of Greenwood, County of Wexford, Michigan

*** Information herein deemed reliable but not guaranteed***

Building Type

X	Single Family
	Mobile Home
	Town Home
	Duplex
	A-Frame
X	Wood Frame

Building Style: PLAIN

Yr Built	Remodeled
0	0

Condition: Good

Room List

	Basement
	1st Floor
	2nd Floor
	Bedrooms

(1) Exterior

	Wood/Shingle
X	Aluminum/Vinyl
	Brick
X	Insulation

(2) Windows

	Many		Large
X	Avg.	X	Avg.
	Few		Small

	Wood Sash
	Metal Sash
X	Vinyl Sash
	Double Hung
	Horiz. Slide
	Casement
	Double Glass
	Patio Doors
X	Storms & Screens

(3) Roof

X	Gable		Gambrel
	Hip		Mansard
	Flat		Shed

X	Asphalt Shingle

Chimney:

(3) Roof (cont.)

	Eavestrough
X	Insulation
0	Front Overhang
0	Other Overhang

(4) Interior

X	Drywall		Plaster
	Paneled		Wood T&G

Trim & Decoration

	Ex	X	Ord		Min

Size of Closets

	Lg	X	Ord		Small

Doors:		Solid	X	H.C.	

(5) Floors

Kitchen:
Other: Linoleum
Other: Carpeted

(6) Ceilings

X	Drywall

(7) Excavation

Basement: 0 S.F.
Crawl: 864 S.F.
Slab: 0 S.F.
Height to Joists: 0.0

(8) Basement

	Conc. Block
	Poured Conc.
	Stone
	Treated Wood
	Concrete Floor

(9) Basement Finish

	Recreation SF
	Living SF
	Walkout Doors (B)
	No Floor SF
	Walkout Doors (A)

(10) Floor Support

Joists:
Unsupported Len:
Cntr.Sup:

(11) Heating/Cooling

X	Gas		Oil		Elec.
	Wood		Coal		Steam

	Forced Air w/o Ducts
X	Forced Air w/ Ducts
	Forced Hot Water
	Electric Baseboard
	Elec. Ceil. Radiant
	Radiant (in-floor)
	Electric Wall Heat
	Space Heater
	Wall/Floor Furnace
	Forced Heat & Cool
	Heat Pump
	No Heating/Cooling

	Central Air
	Wood Furnace

(12) Electric

150	Amps Service

No./Qual. of Fixtures

	Ex.	X	Ord.		Min

No. of Elec. Outlets

	Many	X	Ave.		Few

(13) Plumbing

	Average Fixture(s)
1	3 Fixture Bath
	2 Fixture Bath
	Softener, Auto
	Softener, Manual
	Solar Water Heat
	No Plumbing
	Extra Toilet
	Extra Sink
	Separate Shower
	Ceramic Tile Floor
	Ceramic Tile Wains
	Ceramic Tub Alcove
	Vent Fan

(14) Water/Sewer

	Public Water
	Public Sewer
1	Water Well
1	1000 Gal Septic
	2000 Gal Septic

Lump Sum Items:

(15) Built-ins

	Appliance Allow.
	Cook Top
	Dishwasher
	Garbage Disposal
	Bath Heater
	Vent Fan
	Hot Tub
	Unvented Hood
	Vented Hood
	Intercom
	Jacuzzi Tub
	Jacuzzi repl.Tub
	Oven
	Microwave
	Standard Range
	Self Clean Range
	Sauna
	Trash Compactor
	Central Vacuum
	Security System

(15) Fireplaces

	Interior 1 Story
	Interior 2 Story
	2nd/Same Stack
	Two Sided
	Exterior 1 Story
	Exterior 2 Story
	Prefab 1 Story
	Prefab 2 Story
	Heat Circulator
	Raised Hearth
	Wood Stove
	Direct-Vented Gas

Class: CD
Effec. Age: 30
Floor Area: 864
Total Base New : 148,923 E.C.F.
Total Depr Cost: 111,538 X 1.297
Estimated T.C.V: 144,665

(16) Porches/Decks

Area	Type
360	Treated Wood

(17) Garage

Year Built: 2021
Car Capacity:
Class: CD
Exterior: Pole
Brick Ven.: 0
Stone Ven.: 0
Common Wall: Detache
Foundation: 18 Inch
Finished ?:
Auto. Doors: 0
Mech. Doors: 0
Area: 1200
% Good: 96
Storage Area: 0
No Conc. Floor: 0

Bsmnt Garage:

Carport Area:
Roof:

Cost Est. for Res. Bldg: 1 Single Family PLAIN Cls CD Blt 0
(11) Heating System: Forced Air w/ Ducts
Ground Area = 864 SF Floor Area = 864 SF.
Phy/Ab.Phy/Func/Econ/Comb. % Good=70/100/100/100/70
Building Areas

Stories	Exterior	Foundation	Size	Cost New	Depr. Cost	
1 Story	Siding	Crawl Space	864			
			Total:	104,615	73,229	
Other Additions/Adjustments						
Water/Sewer						
1000 Gal Septic			1	4,582	3,207	
Water Well, 100 Feet			1	5,680	3,976	
Deck						
Treated Wood			360	5,994	4,196	
Garages						
Class: CD Exterior: Pole (Unfinished)						
Base Cost			1200	26,100	25,056	*9
Local Cost Items						
WOOD LEAN TO			320	1,952	1,874	*9
			Totals:	148,923	111,538	

Notes:
ECF (RESIDENTIAL) 1.297 => TCV: 144,665

*** Information herein deemed reliable but not guaranteed***

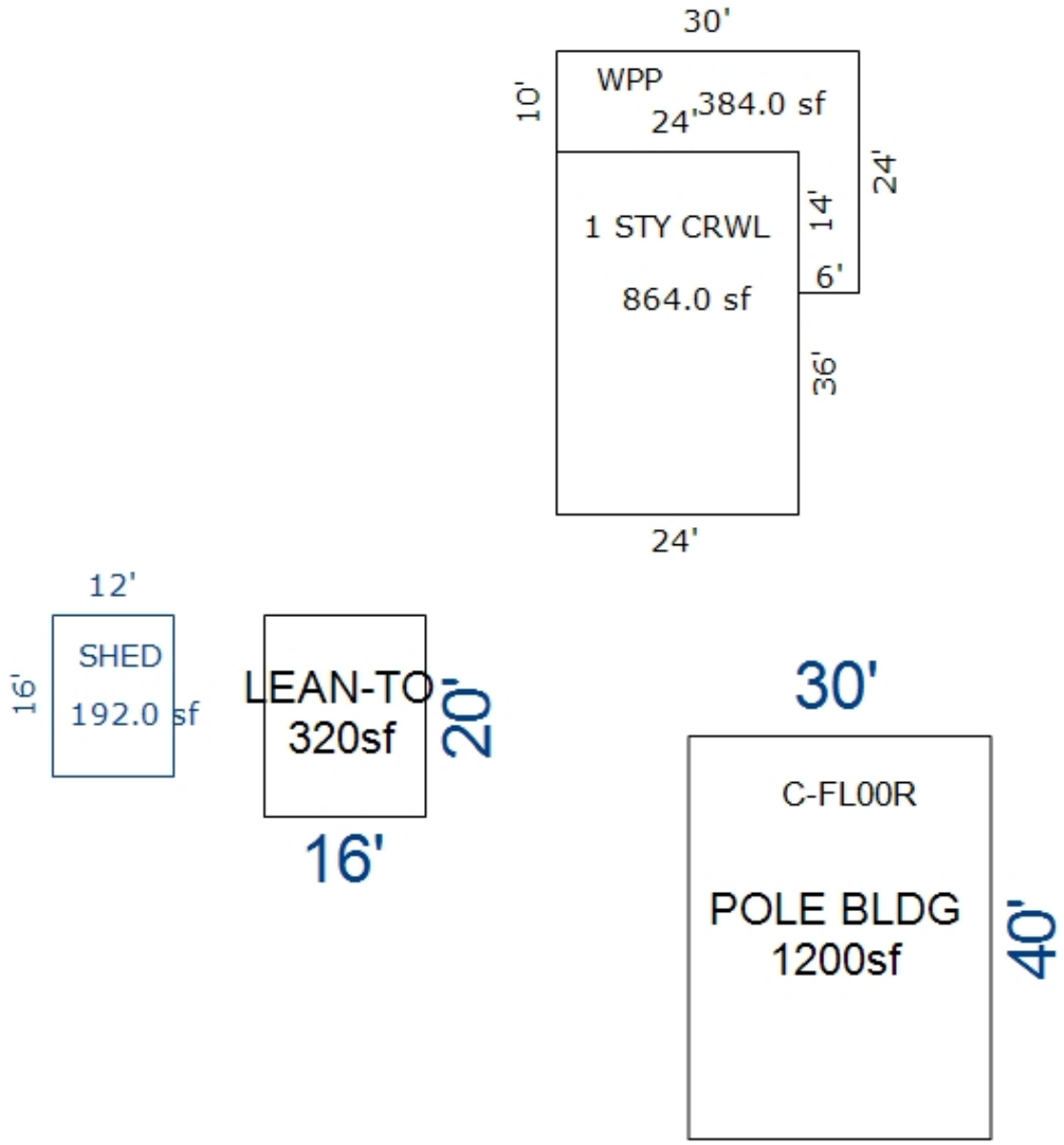

*** Information herein deemed reliable but not guaranteed***

Parcel Number: 2410-06-1203 Jurisdiction: GREENWOOD TWP County: WEXFORD Printed on 02/15/2024

Grantor	Grantee	Sale Price	Sale Date	Inst. Type	Terms of Sale	Liber & Page	Verified By	Prcnt. Trans.
HULETT, LUCILLE	INGERSOL, DAWN	4,500	02/03/1987	LC	03-ARM'S LENGTH	310:269	DEED	0.0

Property Address

674 E COUNTY LINE RD

Owner's Name/Address

INGERSOLL, GARY L II
& MICHELLE M
674 E COUNTY LINE RD
KINGSLEY MI 49649

Tax Description

W 1/2 OF E 1/2 OF W 1/2 OF FRL NE 1/4 -22 A M/L GW. SEC. 6 T24N R10W -KINGSLEY- [[ASSESSED W/ 06-1205 '01 HARDSHIP AV 102 400 TV 82669 '05

Comments/Influences

The Equalizer. Copyright (c) 1999 - 2009. Licensed To: Township of Greenwood, County of Wexford, Michigan

Class: RESIDENTIAL-IMPROV Zoning:

School: KINGSLEY AREA SCHOOL

P.R.E. 100% / /

:

2024 Est TCV 351,942 TCV/TFA: 232.77

Building Permit(s)	Date	Number	Status
RESIDENTIAL - REMODEL	02/19/2002	PB10753	
MOBILE HOME	04/22/1997	PE10328	

X	Improved		Vacant

	Public Improvements
	Dirt Road
	Gravel Road
X	Paved Road
	Storm Sewer
	Sidewalk
	Water
	Sewer
X	Electric
	Gas
	Curb
	Street Lights
	Standard Utilities
	Underground Utils.

	Topography of Site
X	Level
X	Rolling
	Low
	High
	Landscaped
	Swamp
X	Wooded
	Pond
	Waterfront
	Ravine
	Wetland
	Flood Plain
X	OPEN/PINES

Who	When	What
GLA	08/16/2016	INSPECTION

Land Value Estimates for Land Table 4010.LAND VALUES

Description	Frontage	Depth	* Factors * Front	Depth	Rate	%Adj.	Reason	Value
ACREAGE			21.740 Acres		3,009	100		65,409
ROW			0.260 Acres		0	100		0
			22.00 Total Acres				Total Est. Land Value =	65,409

Land Improvement Cost Estimates

Description	Rate	Size	% Good	Cash Value
D/W/P: 3.5 Concrete	6.63	780	54	2,792
Total Estimated Land Improvements True Cash Value =				2,792

Year	Land Value	Building Value	Assessed Value	Board of Review	Tribunal/ Other	Taxable Value
2024	32,700	143,300	176,000			99,345C
2023	27,800	117,000	144,800			94,615C
2022	23,900	98,700	122,600			90,110C
2021	21,700	99,700	121,400			87,232C

*** Information herein deemed reliable but not guaranteed***

Building Type

X	Single Family
	Mobile Home
	Town Home
	Duplex
	A-Frame
X	Wood Frame

Building Style: PLAIN

Yr Built	Remodeled
2002	0

Condition: Good

Room List

	Basement
	1st Floor
	2nd Floor
	Bedrooms

(1) Exterior

	Wood/Shingle
X	Aluminum/Vinyl
	Brick
X	Insulation

(2) Windows

X	Many Avg. Few	X	Large Avg. Small

	Wood Sash
	Metal Sash
X	Vinyl Sash
	Double Hung
	Horiz. Slide
	Casement
	Double Glass
	Patio Doors
X	Storms & Screens

(3) Roof

X	Gable		Gambrel
	Hip		Mansard
	Flat		Shed

X	Asphalt Shingle

Chimney:

(3) Roof (cont.)

	Eavestrough
X	Insulation
0	Front Overhang
0	Other Overhang

(4) Interior

X	Drywall Paneled		Plaster Wood T&G

Trim & Decoration

	Ex	X	Ord		Min

Size of Closets

	Lg	X	Ord		Small

Doors:		Solid	X	H.C.	

(5) Floors

Kitchen:
Other: Linoleum
Other: Carpeted

(6) Ceilings

X	Drywall

(7) Excavation

Basement: 1512 S.F.
Crawl: 0 S.F.
Slab: 0 S.F.
Height to Joists: 0.0

(8) Basement

	Conc. Block
	Poured Conc.
	Stone
	Treated Wood
	Concrete Floor

(9) Basement Finish

	Recreation SF
	Living SF
1	Walkout Doors (B)
	No Floor SF
	Walkout Doors (A)

(10) Floor Support

Joists:
Unsupported Len:
Cntr.Sup:

(11) Heating/Cooling

X	Gas Wood		Oil Coal		Elec. Steam

	Forced Air w/o Ducts
X	Forced Air w/ Ducts
	Forced Hot Water
	Electric Baseboard
	Elec. Ceil. Radiant
	Radiant (in-floor)
	Electric Wall Heat
	Space Heater
	Wall/Floor Furnace
	Forced Heat & Cool
	Heat Pump
	No Heating/Cooling

X	Central Air
	Wood Furnace

(12) Electric

150	Amps Service

No./Qual. of Fixtures

	Ex.	X	Ord.		Min

No. of Elec. Outlets

	Many	X	Ave.		Few

(13) Plumbing

2	Average Fixture(s)
	3 Fixture Bath
	2 Fixture Bath
	Softener, Auto
	Softener, Manual
	Solar Water Heat
	No Plumbing
	Extra Toilet
	Extra Sink
	Separate Shower
	Ceramic Tile Floor
	Ceramic Tile Wains
	Ceramic Tub Alcove
	Vent Fan

(14) Water/Sewer

	Public Water
	Public Sewer
1	Water Well
1	1000 Gal Septic
	2000 Gal Septic

Lump Sum Items:

(15) Built-ins

	Appliance Allow.
	Cook Top
	Dishwasher
	Garbage Disposal
	Bath Heater
	Vent Fan
	Hot Tub
	Unvented Hood
	Vented Hood
	Intercom
	Jacuzzi Tub
	Jacuzzi repl.Tub
	Oven
	Microwave
	Standard Range
	Self Clean Range
	Sauna
	Trash Compactor
	Central Vacuum
	Security System

(15) Fireplaces

	Interior 1 Story
	Interior 2 Story
	2nd/Same Stack
	Two Sided
	Exterior 1 Story
	Exterior 2 Story
	Prefab 1 Story
	Prefab 2 Story
	Heat Circulator
	Raised Hearth
	Wood Stove
	Direct-Vented Gas

Class: C
Effec. Age: 22
Floor Area: 1,512
Total Base New : 280,471 E.C.F.
Total Depr Cost: 218,767 X 1.297
Estimated T.C.V: 283,741

(16) Porches/Decks

Area	Type
420	WCP (1 Story)
56	WPP

(17) Garage

Year Built:
Car Capacity:
Class: C
Exterior: Siding
Brick Ven.: 0
Stone Ven.: 0
Common Wall: 2 Wall
Foundation: 42 Inch
Finished ?:
Auto. Doors: 0
Mech. Doors: 0
Area: 420
% Good: 0
Storage Area: 0
No Conc. Floor: 0

Bsmnt Garage:

Carport Area:
Roof:

Cost Est. for Res. Bldg: 1 Single Family PLAIN Cls C Blt 2002
(11) Heating System: Forced Air w/ Ducts , Air Conditioning
Ground Area = 1512 SF Floor Area = 1512 SF.
Phy/Ab.Phy/Func/Econ/Comb. % Good=78/100/100/100/78
Building Areas

Stories	Exterior	Foundation	Size	Cost New	Depr. Cost
1 Story	Siding	Basement	1,512		
			Total:	231,610	180,655
Other Additions/Adjustments					
Basement, Outside Entrance, Below Grade			1	2,578	2,011
Plumbing					
3 Fixture Bath			1	4,678	3,649
Water/Sewer					
1000 Gal Septic			1	4,899	3,821
Water Well, 100 Feet			1	5,849	4,562
Porches					
WCP (1 Story)			420	13,826	10,784
WPP			56	2,238	1,746
Garages					
Class: C Exterior: Siding Foundation: 42 Inch (Unfinished)					
Base Cost			420	20,202	15,758
Common Wall: 2 Wall			1	-5,409	-4,219
			Totals:	280,471	218,767

Notes:
ECF (RESIDENTIAL) 1.297 => TCV: 283,741

*** Information herein deemed reliable but not guaranteed***

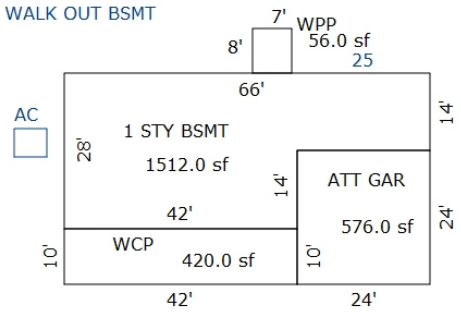

SLAB 26 X 30 = 780 SF

Sketch by Apex Sketch

*** Information herein deemed reliable but not guaranteed***

Parcel Number: 2410-06-1204 Jurisdiction: GREENWOOD TWP County: WEXFORD Printed on 02/15/2024

Grantor	Grantee	Sale Price	Sale Date	Inst. Type	Terms of Sale	Liber & Page	Verified By	Prcnt. Trans.
HULETT, LEON L & IRENE	HULETT, LEON L & IRENE LE	100	10/22/2022	WD	18-LIFE ESTATE	694/446	DEED	0.0
HULETT, LEON L	HULETT, LEON L & IRENE	100	10/20/2022	QC	21-NOT USED/OTHER	694/445	DEED	0.0
HULETT, HARLEY	HULETT, LEON L	1	10/06/1993	WD	21-NOT USED/OTHER	379:710	DEED	0.0

Property Address

678 E COUNTY LINE RD

Owner's Name/Address

HULETT, LEON L & IRENE LE
11300 BLACKMAN RD
KINGSLEY MI 49649

Tax Description

E 1/2 OF E 1/2 OF W 1/2 OF FRL NE 1/4 22 A. M/L GW. SEC. 6 T24N R10W -KINGSLEY-

Comments/Influences

Class: RESIDENTIAL-VACANT Zoning:

School: KINGSLEY AREA SCHOOL

P.R.E. 0%

:

2024 Est TCV 65,409

Building Permit(s)	Date	Number	Status

	Improved	X	Vacant

	Public Improvements
	Dirt Road
	Gravel Road
X	Paved Road
	Storm Sewer
	Sidewalk
	Water
	Sewer
X	Electric
	Gas
	Curb
	Street Lights
	Standard Utilities
	Underground Utils.

	Topography of Site
X	Level
X	Rolling
	Low
	High
	Landscaped
	Swamp
X	Wooded
	Pond
	Waterfront
	Ravine
	Wetland
	Flood Plain
X	OPEN/PINES

Who	When	What
GLA	05/05/2016	INSPECTION

Land Value Estimates for Land Table 4010.LAND VALUES

Description	Frontage	Depth	* Factors * Front	Depth	Rate	%Adj.	Reason	Value
ACREAGE			21.740 Acres		3,009	100		65,409
ROW			0.260 Acres		0	100		0
			22.00 Total Acres		Total Est. Land Value =			65,409

Year	Land Value	Building Value	Assessed Value	Board of Review	Tribunal/ Other	Taxable Value
2024	32,700	0	32,700			8,910C
2023	27,800	0	27,800			8,486C
2022	23,900	0	23,900			8,082C
2021	21,700	0	21,700			7,824C

The Equalizer. Copyright (c) 1999 - 2009. Licensed To: Township of Greenwood, County of Wexford, Michigan

*** Information herein deemed reliable but not guaranteed***

Parcel Number: 2410-06-1206 Jurisdiction: GREENWOOD TWP County: WEXFORD Printed on 02/15/2024

Grantor	Grantee	Sale Price	Sale Date	Inst. Type	Terms of Sale	Liber & Page	Verified By	Prcnt. Trans.
SCHAEFER, ADAM & TIFFANY N	HULETT, MICHELLE	88,000	08/11/2014	WD	03-ARM'S LENGTH	670/278	DEED	100.0
HULETT MICHELLE	SCHAEFER, ADAM	0	08/11/2014	OTH	21-NOT USED/OTHER	670;279	DEED	0.0
LASALLE BANK NATIONAL ASSO	SCHAEFER, ADAM	66,288	12/03/2009	WD	11-FROM LENDING INSTITUTI	626/2072	DEED	100.0
MORTGAGE ELECTRONIC REGIST	LASALLE BANK NATIONAL ASS	0	10/20/2009	QC	21-NOT USED/OTHER	626/2071	DEED	0.0

Property Address

538 E COUNTY LINE RD

Owner's Name/Address

HULETT, MICHELLE
538 E COUNTY LINE RD
KINGSLEY MI 49649

Tax Description

COM AT N 1/4 COR OF SEC; E 327.99 FT; S 475 FT TO POB: S 450 FT; W 100 FT; N 450 FT; E 100 FT TO POB. --1.03 A M/L-- GW SEC 6 T24N R10W -KINGSLEY- [[ASSESED W/ 06-1201 '99

Comments/Influences

Default Comments

The Equalizer. Copyright (c) 1999 - 2009. Licensed To: Township of Greenwood, County of Wexford, Michigan

Class: RESIDENTIAL-IMPROV Zoning:

School: KINGSLEY AREA SCHOOL

P.R.E. 100% 08/11/2014

:

2024 Est TCV 223,763 TCV/TFA: 143.44

Building Permit(s)	Date	Number	Status

X	Improved		Vacant

	Public Improvements
X	Dirt Road
	Gravel Road
X	Paved Road
	Storm Sewer
	Sidewalk
	Water
	Sewer
X	Electric
	Gas
	Curb
	Street Lights
	Standard Utilities
	Underground Utils.

	Topography of Site
X	Level
	Rolling
	Low
	High
	Landscaped
	Swamp
	Wooded
	Pond
	Waterfront
	Ravine
	Wetland
	Flood Plain
X	OPEN

Who	When	What
GLA	05/13/2021	INSPECTION
LM	10/20/2010	INSPECTED
GLA	05/05/2016	INSPECTION

Land Value Estimates for Land Table 4010.LAND VALUES

Description	Frontage	Depth	* Factors * Front	Depth	Rate	%Adj.	Reason	Value
HELSEL RIV LOW	450.00	100.00	1.0000	0.0000	315	100*		0
ACREAGE			1.033	Acres	10,953	100		11,314

* denotes lines that do not contribute to the total acreage calculation.

450 Actual Front Feet, 1.03 Total Acres Total Est. Land Value = 11,314

Year	Land Value	Building Value	Assessed Value	Board of Review	Tribunal/ Other	Taxable Value
2024	5,700	106,200	111,900			66,982C
2023	3,100	86,600	89,700			63,793C
2022	2,600	73,000	75,600			60,756C
2021	3,100	73,800	76,900			58,816C

*** Information herein deemed reliable but not guaranteed***

Building Type

X	Single Family
	Mobile Home
	Town Home
	Duplex
	A-Frame
X	Wood Frame

Building Style: RANCH

Yr Built	Remodeled
2001	0

Condition: Average

Room List

	Basement
	1st Floor
	2nd Floor
	Bedrooms

(1) Exterior

	Wood/Shingle
	Aluminum/Vinyl
	Brick
X	Vinyl
	Insulation

(2) Windows

X	Many Avg. Few	X	Large Avg. Small

	Wood Sash
	Metal Sash
X	Vinyl Sash
X	Double Hung
	Horiz. Slide
	Casement
	Double Glass
	Patio Doors
X	Storms & Screens

(3) Roof

X	Gable		Gambrel
	Hip		Mansard
	Flat		Shed

X	Asphalt Shingle

Chimney: Metal

(3) Roof (cont.)

	Eavestrough
	Insulation
0	Front Overhang
0	Other Overhang

(4) Interior

	Drywall		Plaster
	Paneled		Wood T&G

Trim & Decoration

	Ex		Ord		Min

Size of Closets

	Lg		Ord		Small

Doors:		Solid		H.C.	

(5) Floors

Kitchen:
Other:
Other:

(6) Ceilings

(7) Excavation

Basement: 1560 S.F.
Crawl: 0 S.F.
Slab: 0 S.F.
Height to Joists: 0.0

(8) Basement

	Conc. Block
	Poured Conc.
	Stone
	Treated Wood
	Concrete Floor

(9) Basement Finish

	Recreation	SF
	Living	SF
1	Walkout Doors (B)	
	No Floor	SF
	Walkout Doors (A)	

(10) Floor Support

Joists:
Unsupported Len:
Cntr.Sup:

(11) Heating/Cooling

X	Gas		Oil		Elec.
	Wood		Coal		Steam

	Forced Air w/o Ducts
X	Forced Air w/ Ducts
	Forced Hot Water
	Electric Baseboard
	Elec. Ceil. Radiant
	Radiant (in-floor)
	Electric Wall Heat
	Space Heater
	Wall/Floor Furnace
	Forced Heat & Cool
	Heat Pump
	No Heating/Cooling

	Central Air
	Wood Furnace

(12) Electric

0	Amps Service

No./Qual. of Fixtures

	Ex.		Ord.		Min

No. of Elec. Outlets

	Many		Ave.		Few

(13) Plumbing

	Average Fixture(s)
1	3 Fixture Bath
	2 Fixture Bath
	Softener, Auto
	Softener, Manual
	Solar Water Heat
	No Plumbing
	Extra Toilet
	Extra Sink
	Separate Shower
	Ceramic Tile Floor
	Ceramic Tile Wains
	Ceramic Tub Alcove
	Vent Fan

(14) Water/Sewer

	Public Water
	Public Sewer
1	Water Well
1	1000 Gal Septic
	2000 Gal Septic

Lump Sum Items:

(15) Built-ins

	Appliance Allow.
	Cook Top
	Dishwasher
	Garbage Disposal
	Bath Heater
	Vent Fan
	Hot Tub
	Unvented Hood
	Vented Hood
	Intercom
	Jacuzzi Tub
	Jacuzzi repl.Tub
	Oven
	Microwave
	Standard Range
	Self Clean Range
	Sauna
	Trash Compactor
	Central Vacuum
	Security System

(15) Fireplaces

	Interior 1 Story
	Interior 2 Story
	2nd/Same Stack
	Two Sided
	Exterior 1 Story
	Exterior 2 Story
	Prefab 1 Story
	Prefab 2 Story
	Heat Circulator
	Raised Hearth
	Wood Stove
1	Direct-Vented Gas

Class: CD
Effec. Age: 23
Floor Area: 1,560
Total Base New : 212,728 E.C.F.
Total Depr Cost: 163,800 X 1.297
Estimated T.C.V: 212,449

(16) Porches/Decks

Area	Type
18	Treated Wood

(17) Garage

Year Built:
Car Capacity:
Class:
Exterior:
Brick Ven.:
Stone Ven.:
Common Wall:
Foundation:
Finished ?:
Auto. Doors:
Mech. Doors:
Area:
% Good:
Storage Area:
No Conc. Floor:

Bsmnt Garage:

Carport Area:
Roof:

Cost Est. for Res. Bldg: 1 Single Family RANCH Cls CD Blt 2001
(11) Heating System: Forced Air w/ Ducts
Ground Area = 1560 SF Floor Area = 1560 SF.
Phy/Ab.Phy/Func/Econ/Comb. % Good=77/100/100/100/77

Building Areas

Stories	Exterior	Foundation	Size	Cost New	Depr. Cost
1 Story	Siding	Basement	1,560		
			Total:	197,315	151,932
Other Additions/Adjustments					
Basement, Outside Entrance, Below Grade			1	2,176	1,676
Water/Sewer					
1000 Gal Septic			1	4,582	3,528
Water Well, 100 Feet			1	5,680	4,374
Fireplaces					
Direct-Vented Gas			1	2,164	1,666
Deck					
Treated Wood			18	811	624
			Totals:	212,728	163,800

Notes:

ECF (RESIDENTIAL) 1.297 => TCV: 212,449

*** Information herein deemed reliable but not guaranteed***

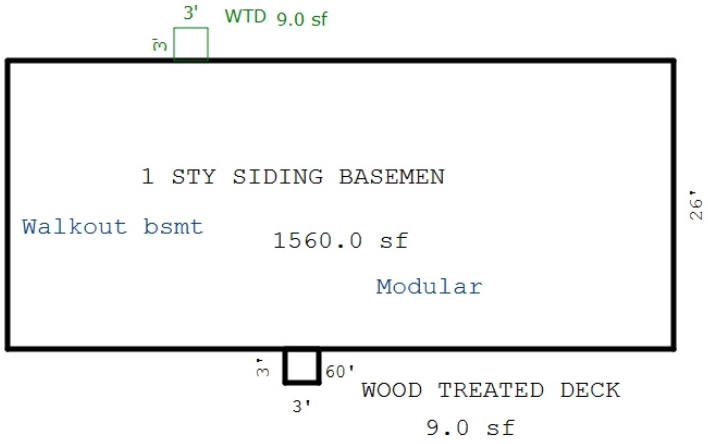

Sketch by Apex Sketch

*** Information herein deemed reliable but not guaranteed***

Parcel Number: 2410-06-1207 Jurisdiction: GREENWOOD TWP County: WEXFORD Printed on 02/15/2024

Grantor	Grantee	Sale Price	Sale Date	Inst. Type	Terms of Sale	Liber & Page	Verified By	Prcnt. Trans.
RAYMER, CLIVE RAYMER SURV	INGERSOLL, GARY	0	10/15/2013	QC	09-FAMILY	663/1539	DEED	100.0
INGERSOL, DAWN AKA RAYMER	RAYMER, DAWN & CLIVE ETAL	0	11/15/2010	QC	21-NOT USED/OTHER	634/2705	DEED	0.0

Property Address

Owner's Name/Address

INGERSOLL, GARY
674 E COUNTY LINE RD
KINGSLEY MI 49649

Tax Description

COM AT N 1/4 COR OF SEC; E 327.99 FT; S 492.72 FT TO POB: S 2443.79 FT; E 329.65 FT; N 2429.37 FT; W 328.11 FT TO POB. 18.39 A M/L-- TOG W/EASMT GW SEC 6 T24N R10W -KINGSLEY- [[ASSESSED W/ 06-1202 '03

Comments/Influences

The Equalizer. Copyright (c) 1999 - 2009. Licensed To: Township of Greenwood, County of Wexford, Michigan

Class: RESIDENTIAL-VACANT Zoning:

School: KINGSLEY AREA SCHOOL

P.R.E. 100% / /

:

2024 Est TCV 58,848

Building Permit(s)	Date	Number	Status

	Improved	X	Vacant

	Public Improvements
X	Dirt Road
	Gravel Road
	Paved Road
	Storm Sewer
	Sidewalk
	Water
	Sewer
X	Electric
	Gas
	Curb
	Street Lights
	Standard Utilities
	Underground Utils.

	Topography of Site
	Level
	Rolling
	Low
	High
	Landscaped
	Swamp
X	Wooded
	Pond
	Waterfront
	Ravine
	Wetland
	Flood Plain
X	PINES

Who	When	What
GLA	10/31/2022	INSPECTION
LM	10/28/2011	APPR INSPE
GLA	05/05/2016	INSPECTION

Land Value Estimates for Land Table 4010.LAND VALUES

Description	Frontage	Depth	* Factors * Front	Depth	Rate	%Adj.	Reason	Value
ACREAGE			18.390 Acres		3,200	100		58,848
			18.39 Total Acres		Total Est. Land Value =			58,848

Year	Land Value	Building Value	Assessed Value	Board of Review	Tribunal/ Other	Taxable Value
2024	29,400	0	29,400			17,799C
2023	23,900	0	23,900			16,952C
2022	20,500	0	20,500			16,145C
2021	19,400	0	19,400			15,630C

*** Information herein deemed reliable but not guaranteed***

Parcel Number: 2410-06-2101 Jurisdiction: GREENWOOD TWP County: WEXFORD Printed on 02/15/2024

Grantor	Grantee	Sale Price	Sale Date	Inst. Type	Terms of Sale	Liber & Page	Verified By	Prcnt. Trans.

Property Address

Owner's Name/Address

STATE OF MICHIGAN
P O BOX 30735
GRANTS ADMINISTRATION
LANSING MI 48909-8235

Tax Description

FRL NW 1/4 & E 1/2 OF FRL SW 1/4 225.04 A. GW. SEC. 6 T24N R10W -KINGSLEY-

Comments/Influences

The Equalizer. Copyright (c) 1999 - 2009. Licensed To: Township of Greenwood, County of Wexford, Michigan

Class: AGRICULTURAL-VACAN Zoning:

School: KINGSLEY AREA SCHOOL

P.R.E. 0%

:

2024 Est TCV 0

Building Permit(s)	Date	Number	Status

	Improved	X	Vacant

	Public Improvements
	Dirt Road
	Gravel Road
X	Paved Road
	Storm Sewer
	Sidewalk
	Water
	Sewer
X	Electric
	Gas
	Curb
	Street Lights
	Standard Utilities
	Underground Utils.

	Topography of Site
X	Level
X	Rolling
	Low
	High
	Landscaped
	Swamp
X	Wooded
	Pond
	Waterfront
	Ravine
	Wetland
	Flood Plain
X	OPEN/PINES

Who	When	What
GLA	05/05/2016	INSPECTION

Land Value Estimates for Land Table 4010.LAND VALUES

Description	Frontage	Depth	* Factors * Front	Depth	Rate	%Adj.	Reason	Value
ACREAGE			222.380 Acres		2,480	100		551,502
			2.660 Acres		0	100		0
			225.04 Total Acres		Total Est. Land Value =			551,502

Year	Land Value	Building Value	Assessed Value	Board of Review	Tribunal/ Other	Taxable Value
2024	EXEMPT	EXEMPT	EXEMPT			EXEMPT
2023	EXEMPT	EXEMPT	EXEMPT			EXEMPT
2022	0	0	0			0
2021	0	0	0			0

*** Information herein deemed reliable but not guaranteed***

Parcel Number: 2410-06-3201 Jurisdiction: GREENWOOD TWP County: WEXFORD Printed on 02/15/2024

Grantor	Grantee	Sale Price	Sale Date	Inst. Type	Terms of Sale	Liber & Page	Verified By	Prcnt. Trans.
CLEAR SHOT INVESTMENTS INC	DEMETER, CAROLINE M & CHRI	0	09/12/2014	WD	16-LC PAYOFF	670/2712	DEED	0.0
ALDRICH, KENNETH & JOANNA	CLEAR SHOT INVESTMENTS INC	0	09/14/2012	WD	21-NOT USED/OTHER	651/2144	DEED	0.0
ARLT, DONALD R & CAROLYN A	ALDRICH, KENNETH L & JOANN	0	06/23/2008	WD	21-NOT USED/OTHER	612/1800	DEED	0.0
ARLT, DONALD & CAROLYN	DEMETER, CAROLINE M	0	03/28/2008	LC	21-NOT USED/OTHER	609/2282	DEED	100.0

Property Address

Owner's Name/Address

DEMETER, CAROLINE M & CHRISTOPHER
45 E 4 RD
KINGSLEY MI 49649

Tax Description

S 557.5 FT OF N 2082.5 FT OF FRL W 1/2 OF FRL SW 1/4 EXC E 396 FT THEREOF. TOG W/ EASEMT --5 A M/L-- GW. SEC. 6 T24N R10W -KINGSLEY-

Comments/Influences

Class: RESIDENTIAL-VACANT Zoning:

School: KINGSLEY AREA SCHOOL

P.R.E. 100% 04/28/2011

:

2024 Est TCV 25,560

Building Permit(s)	Date	Number	Status

	Improved	X	Vacant

	Public Improvements
X	Dirt Road
	Gravel Road
	Paved Road
	Storm Sewer
	Sidewalk
	Water
	Sewer
X	Electric
	Gas
	Curb
	Street Lights
	Standard Utilities
	Underground Utils.

	Topography of Site
X	Level
X	Rolling
	Low
	High
	Landscaped
	Swamp
X	Wooded
	Pond
	Waterfront
	Ravine
	Wetland
	Flood Plain
X	OPEN

Who	When	What
GLA	05/08/2016	INSPECTION

Land Value Estimates for Land Table 4010.LAND VALUES

Description	Frontage	Depth	* Factors * Front	Depth	Rate	%Adj.	Reason	Value
ACREAGE			5.000 Acres		5,112	100		25,560
			5.00 Total Acres			Total Est. Land Value =		25,560

Year	Land Value	Building Value	Assessed Value	Board of Review	Tribunal/ Other	Taxable Value
2024	12,800	0	12,800			6,133C
2023	10,800	0	10,800			5,841C
2022	7,500	0	7,500			5,563C
2021	8,500	0	8,500			5,386C

The Equalizer. Copyright (c) 1999 - 2009. Licensed To: Township of Greenwood, County of Wexford, Michigan

*** Information herein deemed reliable but not guaranteed***

Parcel Number: 2410-06-3202 Jurisdiction: GREENWOOD TWP County: WEXFORD Printed on 02/15/2024

Grantor	Grantee	Sale Price	Sale Date	Inst. Type	Terms of Sale	Liber & Page	Verified By	Prcnt. Trans.

Property Address
11480 N 25 RD

Owner's Name/Address
HUDSON, JAMES L. & SANDRA K. 11480 N 25 RD KINGSLEY MI 49649

Tax Description
PAR COM AT INT OF N LINE OF SW 1/4 & C/L OF N 25-MILE RD IN W 1/2 OF SW 1/4 E 175 FT; S 175 FT; W 265 FT TO CL OF RD; NE'LY TO POB. --.88 A M/L-- GW SEC. 6 T24N R10W -KINGSLEY-

Comments/Influences

The Equalizer. Copyright (c) 1999 - 2009. Licensed To: Township of Greenwood, County of Wexford, Michigan

Class: RESIDENTIAL-IMPROV Zoning:

School: KINGSLEY AREA SCHOOL

P.R.E. 100% / /

:

2024 Est TCV 150,417 TCV/TFA: 80.35

Building Permit(s)	Date	Number	Status

X	Improved		Vacant

	Public Improvements
	Dirt Road
	Gravel Road
X	Paved Road
	Storm Sewer
	Sidewalk
	Water
	Sewer
X	Electric
	Gas
	Curb
	Street Lights
	Standard Utilities
	Underground Utils.

	Topography of Site
X	Level
X	Rolling
	Low
	High
	Landscaped
	Swamp
X	Wooded
	Pond
	Waterfront
	Ravine
	Wetland
	Flood Plain
X	OPEN/PINES

Who	When	What
GLA	05/13/2021	INSPECTION
LM	10/28/2011	APPR INSPE
GLA	05/08/2016	INSPECTION

Land Value Estimates for Land Table 4010.LAND VALUES

Description	Frontage	Depth	* Factors * Front	Depth	Rate	%Adj.	Reason	Value
HELSEL RIV LOW	175.00	265.00	1.0000	0.0000	315	100*		0
ACREAGE			0.730 Acres		10,953	100		7,996
ROW			0.150 Acres		0	100		0

* denotes lines that do not contribute to the total acreage calculation.

175 Actual Front Feet, 0.88 Total Acres Total Est. Land Value = 7,996

Land Improvement Cost Estimates

Description	Rate	Size	% Good	Cash Value
D/W/P: 3.5 Concrete	5.82	96	68	380

Total Estimated Land Improvements True Cash Value = 380

Year	Land Value	Building Value	Assessed Value	Board of Review	Tribunal/ Other	Taxable Value
2024	4,000	71,200	75,200			34,866C
2023	2,200	58,400	60,600			33,206C
2022	1,800	49,500	51,300			31,625C
2021	2,200	50,200	52,400			30,615C

*** Information herein deemed reliable but not guaranteed***

Building Type

X	Single Family
	Mobile Home
	Town Home
	Duplex
	A-Frame
X	Wood Frame

Building Style: RANCH

Yr Built	Remodeled
1978	0

Condition: Fair

Room List

	Basement
7	1st Floor
	2nd Floor
6	Bedrooms

(1) Exterior

	Wood/Shingle
	Aluminum/Vinyl
	Brick
X	Hardboard
	Insulation

(2) Windows

X	Many		Large
	Avg.	X	Avg.
	Few		Small

X	Wood Sash
	Metal Sash
	Vinyl Sash
X	Double Hung
	Horiz. Slide
	Casement
	Double Glass
	Patio Doors
X	Storms & Screens

(3) Roof

X	Gable		Gambrel
	Hip		Mansard
	Flat		Shed

X	Asphalt Shingle

Chimney: Block

(3) Roof (cont.)

	Eavestrough
	Insulation
0	Front Overhang
0	Other Overhang

(4) Interior

X	Drywall		Plaster
	Paneled		Wood T&G

Trim & Decoration

	Ex	X	Ord		Min

Size of Closets

	Lg	X	Ord		Small

Doors:		Solid	X	H.C.	

(5) Floors

Kitchen: Linoleum
Other: Carpeted
Other:

(6) Ceilings

(7) Excavation

Basement: 0 S.F.
Crawl: 0 S.F.
Slab: 0 S.F.
Height to Joists: 0.0

(8) Basement

	Conc. Block
	Poured Conc.
	Stone
	Treated Wood
	Concrete Floor

(9) Basement Finish

	Recreation SF
	Living SF
	Walkout Doors (B)
	No Floor SF
	Walkout Doors (A)

(10) Floor Support

Joists:
Unsupported Len:
Cntr.Sup:

(11) Heating/Cooling

X	Gas		Oil		Elec.
	Wood		Coal		Steam

	Forced Air w/o Ducts
X	Forced Air w/ Ducts
	Forced Hot Water
	Electric Baseboard
	Elec. Ceil. Radiant
	Radiant (in-floor)
	Electric Wall Heat
	Space Heater
	Wall/Floor Furnace
	Forced Heat & Cool
	Heat Pump
	No Heating/Cooling
	Central Air
	Wood Furnace

(12) Electric

0	Amps Service

No./Qual. of Fixtures

	Ex.		Ord.		Min

No. of Elec. Outlets

	Many		Ave.		Few

(13) Plumbing

	Average Fixture(s)
1	3 Fixture Bath
	2 Fixture Bath
	Softener, Auto
	Softener, Manual
	Solar Water Heat
	No Plumbing
	Extra Toilet
	Extra Sink
	Separate Shower
	Ceramic Tile Floor
	Ceramic Tile Wains
	Ceramic Tub Alcove
	Vent Fan

(14) Water/Sewer

	Public Water
	Public Sewer
1	Water Well
1	1000 Gal Septic
	2000 Gal Septic

Lump Sum Items:

(15) Built-ins

	Appliance Allow.
	Cook Top
	Dishwasher
	Garbage Disposal
	Bath Heater
	Vent Fan
	Hot Tub
	Unvented Hood
	Vented Hood
	Intercom
	Jacuzzi Tub
	Jacuzzi repl.Tub
	Oven
	Microwave
	Standard Range
	Self Clean Range
	Sauna
	Trash Compactor
	Central Vacuum
	Security System

(15) Fireplaces

	Interior 1 Story
	Interior 2 Story
	2nd/Same Stack
	Two Sided
	Exterior 1 Story
	Exterior 2 Story
	Prefab 1 Story
	Prefab 2 Story
	Heat Circulator
	Raised Hearth
	Wood Stove
	Direct-Vented Gas

Class: CD
Effec. Age: 46
Floor Area: 1,872
Total Base New : 202,808 E.C.F.
Total Depr Cost: 109,515 X 1.297
Estimated T.C.V: 142,041

(16) Porches/Decks

Area	Type
96	Treated Wood

(17) Garage

Year Built:
Car Capacity:
Class: CD
Exterior: Siding
Brick Ven.: 0
Stone Ven.: 0
Common Wall: 1 Wall
Foundation: 42 Inch
Finished ?:
Auto. Doors: 0
Mech. Doors: 0
Area: 440
% Good: 0
Storage Area: 0
No Conc. Floor: 0

Bsmnt Garage:

Carport Area:
Roof:

Cost Est. for Res. Bldg: 1 Single Family RANCH Cls CD Blt 1978
(11) Heating System: Forced Air w/ Ducts
Ground Area = 1040 SF Floor Area = 1872 SF.
Phy/Ab.Phy/Func/Econ/Comb. % Good=54/100/100/100/54
Building Areas

Stories	Exterior	Foundation	Size	Cost New	Depr. Cost
Bi-Level	Siding	Bi-Lev. 80%	1,040		
			Total:	173,963	93,940
Other Additions/Adjustments					
Water/Sewer					
1000 Gal Septic			1	4,582	2,474
Water Well, 100 Feet			1	5,680	3,067
Deck					
Treated Wood			96	2,460	1,328
Garages					
Class: CD Exterior: Siding Foundation: 42 Inch (Unfinished)					
Base Cost			440	18,652	10,072
Common Wall: 1 Wall			1	-2,529	-1,366
			Totals:	202,808	109,515

Notes:
ECF (RESIDENTIAL) 1.297 => TCV: 142,041

*** Information herein deemed reliable but not guaranteed***

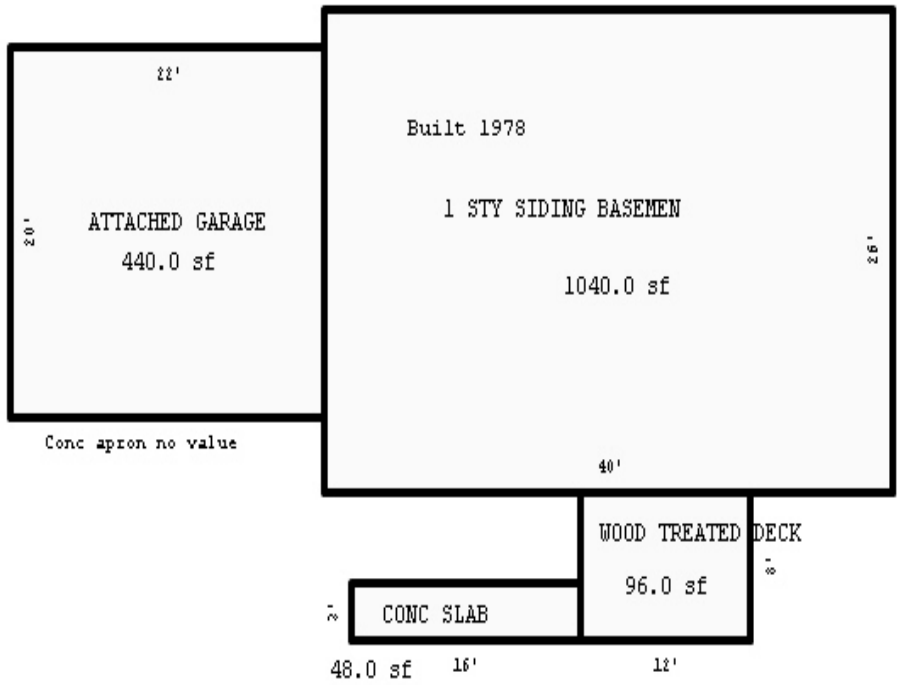

Sketch by Apex Medina™

*** Information herein deemed reliable but not guaranteed***

Parcel Number: 2410-06-3203 Jurisdiction: GREENWOOD TWP County: WEXFORD Printed on 02/15/2024

Grantor	Grantee	Sale Price	Sale Date	Inst. Type	Terms of Sale	Liber & Page	Verified By	Prcnt. Trans.
SHEETS, GRANT W.	SHEETS, GRANT W & LORETTA	0	06/24/2019	WD	18-LIFE ESTATE	685 /798	DEED	0.0

Property Address

11481 N 25 RD

Owner's Name/Address

SHEETS, GRANT W & LORETTA LE
11481 N 25 RD
KINGSLEY MI 49649

Tax Description

THAT PART OF W 1/2 OF SW 1/4 LYING NW'LY OF COL. RD. (E. SECOND ROAD) --3.01 A M/L-- GW. SEC. 6 T24N R10W -KINGSLEY-

Comments/Influences

The Equalizer. Copyright (c) 1999 - 2009. Licensed To: Township of Greenwood, County of Wexford, Michigan

Class: RESIDENTIAL-IMPROV Zoning:

School: KINGSLEY AREA SCHOOL

P.R.E. 100% / /

:

2024 Est TCV 184,510 TCV/TFA: 144.15

Building Permit(s)	Date	Number	Status

X Improved | Vacant

Public Improvements

- Dirt Road
- Gravel Road
- X Paved Road
- Storm Sewer
- Sidewalk
- Water
- Sewer
- X Electric
- Gas
- Curb
- Street Lights
- Standard Utilities
- Underground Utils.

Topography of Site

- X Level
- X Rolling
- Low
- High
- Landscaped
- Swamp
- X Wooded
- Pond
- Waterfront
- Ravine
- Wetland
- Flood Plain
- X OPEN/PINES

Who	When	What
GLA	05/05/2016	INSPECTION

Land Value Estimates for Land Table 4010.LAND VALUES

Description	Frontage	Depth	* Factors * Front	Depth	Rate	%Adj.	Reason	Value
ACREAGE			2.390 Acres		5,546	100		13,255
ROW			0.620 Acres		0	100		0
			3.01 Total Acres		Total Est. Land Value =			13,255

Land Improvement Cost Estimates

Description	Rate	Size	% Good	Cash Value
D/W/P: 4in Concrete	7.01	410	45	1,293
Wood Frame	23.91	288	52	3,581
Wood Frame	25.17	192	52	2,513
Total Estimated Land Improvements True Cash Value =				7,387

Year	Land Value	Building Value	Assessed Value	Board of Review	Tribunal/ Other	Taxable Value
2024	6,600	85,700	92,300			40,840C
2023	6,600	70,700	77,300			38,896C
2022	5,400	60,200	65,600			37,044C
2021	5,200	61,000	66,200			35,861C

*** Information herein deemed reliable but not guaranteed***

Building Type

X	Single Family
	Mobile Home
	Town Home
	Duplex
	A-Frame
X	Wood Frame

Building Style: PLAIN

Yr Built	Remodeled
0	0

Condition: Good

Room List

	Basement
	1st Floor
	2nd Floor
	Bedrooms

(1) Exterior

X	Wood/Shingle
	Aluminum/Vinyl
	Brick
X	Insulation

(2) Windows

	Many		Large
X	Avg.	X	Avg.
	Few		Small

X	Wood Sash
	Metal Sash
	Vinyl Sash
	Double Hung
	Horiz. Slide
	Casement
	Double Glass
	Patio Doors
X	Storms & Screens

(3) Roof

X	Gable		Gambrel
	Hip		Mansard
	Flat		Shed

X	Asphalt Shingle

Chimney:

(3) Roof (cont.)

	Eavestrough
X	Insulation
0	Front Overhang
0	Other Overhang

(4) Interior

X	Drywall		Plaster
	Paneled		Wood T&G

Trim & Decoration

	Ex	X	Ord		Min

Size of Closets

	Lg	X	Ord		Small

Doors:		Solid	X	H.C.	

(5) Floors

Kitchen:
Other: Linoleum
Other: Carpeted

(6) Ceilings

X	Drywall

(7) Excavation

Basement: 1280 S.F.
Crawl: 0 S.F.
Slab: 0 S.F.
Height to Joists: 0.0

(8) Basement

	Conc. Block
	Poured Conc.
	Stone
	Treated Wood
	Concrete Floor

(9) Basement Finish

	Recreation SF
	Living SF
	Walkout Doors (B)
	No Floor SF
	Walkout Doors (A)

(10) Floor Support

Joists:
Unsupported Len:
Cntr.Sup:

(11) Heating/Cooling

X	Gas		Oil		Elec.
	Wood		Coal		Steam

	Forced Air w/o Ducts
X	Forced Air w/ Ducts
	Forced Hot Water
	Electric Baseboard
	Elec. Ceil. Radiant
	Radiant (in-floor)
	Electric Wall Heat
	Space Heater
	Wall/Floor Furnace
	Forced Heat & Cool
	Heat Pump
	No Heating/Cooling

	Central Air
	Wood Furnace

(12) Electric

150	Amps Service

No./Qual. of Fixtures

	Ex.	X	Ord.		Min

No. of Elec. Outlets

	Many	X	Ave.		Few

(13) Plumbing

	Average Fixture(s)
1	3 Fixture Bath
	2 Fixture Bath
	Softener, Auto
	Softener, Manual
	Solar Water Heat
	No Plumbing
	Extra Toilet
	Extra Sink
	Separate Shower
	Ceramic Tile Floor
	Ceramic Tile Wains
	Ceramic Tub Alcove
	Vent Fan

(14) Water/Sewer

	Public Water
	Public Sewer
1	Water Well
1	1000 Gal Septic
	2000 Gal Septic

Lump Sum Items:

(15) Built-ins

	Appliance Allow.
	Cook Top
	Dishwasher
	Garbage Disposal
	Bath Heater
	Vent Fan
	Hot Tub
	Unvented Hood
	Vented Hood
	Intercom
	Jacuzzi Tub
	Jacuzzi repl.Tub
	Oven
	Microwave
	Standard Range
	Self Clean Range
	Sauna
	Trash Compactor
	Central Vacuum
	Security System

(15) Fireplaces

	Interior 1 Story
	Interior 2 Story
	2nd/Same Stack
	Two Sided
	Exterior 1 Story
	Exterior 2 Story
	Prefab 1 Story
	Prefab 2 Story
	Heat Circulator
	Raised Hearth
	Wood Stove
	Direct-Vented Gas

Class: CD
Effec. Age: 48
Floor Area: 1,280
Total Base New : 242,969 E.C.F.
Total Depr Cost: 126,344 X 1.297
Estimated T.C.V: 163,868

(16) Porches/Decks

Area	Type
80	WGEP (1 Story)

(17) Garage

Year Built:
Car Capacity:
Class: CD
Exterior: Siding
Brick Ven.: 0
Stone Ven.: 0
Common Wall: 1 Wall
Foundation: 42 Inch
Finished ?:
Auto. Doors: 0
Mech. Doors: 0
Area: 832
% Good: 0
Storage Area: 0
No Conc. Floor: 0

Bsmnt Garage:

Carport Area:
Roof:

Cost Est. for Res. Bldg: 1 Single Family PLAIN Cls CD Blt 0
(11) Heating System: Forced Air w/ Ducts
Ground Area = 1280 SF Floor Area = 1280 SF.
Phy/Ab.Phy/Func/Econ/Comb. % Good=52/100/100/100/52
Building Areas

Stories	Exterior	Foundation	Size	Cost New	Depr. Cost
1 Story	Siding	Basement	1,280		
			Total:	167,204	86,946
Other Additions/Adjustments					
Water/Sewer					
1000 Gal Septic			1	4,582	2,383
Water Well, 100 Feet			1	5,680	2,954
Porches					
WGEP (1 Story)			80	7,650	3,978
Garages					
Class: CD Exterior: Siding Foundation: 42 Inch (Unfinished)					
Base Cost			832	29,062	15,112
Common Wall: 1 Wall			1	-2,529	-1,315
Class: CD Exterior: Pole (Unfinished)					
Base Cost			1440	31,320	16,286
			Totals:	242,969	126,344

Notes:
ECF (RESIDENTIAL) 1.297 => TCV: 163,868

*** Information herein deemed reliable but not guaranteed***

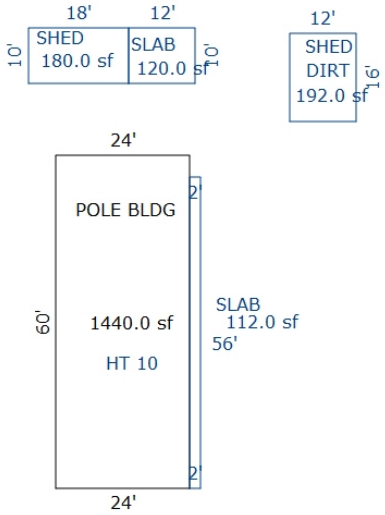

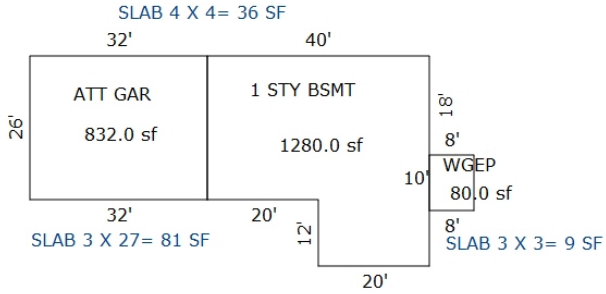

Sketch by Apex Sketch

*** Information herein deemed reliable but not guaranteed***

Parcel Number: 2410-06-3204 Jurisdiction: GREENWOOD TWP County: WEXFORD Printed on 02/15/2024

Grantor	Grantee	Sale Price	Sale Date	Inst. Type	Terms of Sale	Liber & Page	Verified By	Prcnt. Trans.

Property Address
11340 N 25 RD

Owner's Name/Address
TRAYLOR, JOSEPH JR. & ANN 11340 N 25 RD KINGSLEY MI 49649

Tax Description
S 350 FT OF N 700 FT OF W 1/2 OF SW 1/4 LYING E OF CO. RD. --5.63 A M/L-- GW. SEC. 6 T24N R10W -KINGSLEY-

Comments/Influences

The Equalizer. Copyright (c) 1999 - 2009. Licensed To: Township of Greenwood, County of Wexford, Michigan

Class: RESIDENTIAL-IMPROV Zoning:

School: KINGSLEY AREA SCHOOL

P.R.E. 100% / /

:

2024 Est TCV 196,202 TCV/TFA: 145.12

Building Permit(s)	Date	Number	Status

X	Improved		Vacant

	Public Improvements
	Dirt Road
	Gravel Road
X	Paved Road
	Storm Sewer
	Sidewalk
	Water
	Sewer
X	Electric
	Gas
	Curb
	Street Lights
	Standard Utilities
	Underground Utils.

	Topography of Site
X	Level
X	Rolling
	Low
	High
	Landscaped
	Swamp
X	Wooded
	Pond
	Waterfront
	Ravine
	Wetland
	Flood Plain
X	OPEN/PINES

Who	When	What
GLA	05/08/2016	INSPECTION

Land Value Estimates for Land Table 4010.LAND VALUES

Description	Frontage	Depth	* Factors * Front	Depth	Rate	%Adj.	Reason	Value
ACREAGE			5.330 Acres		5,112	100		27,247
ROW			0.300 Acres		0	100		0
			5.63 Total Acres		Total Est. Land Value =			27,247

Land Improvement Cost Estimates

Description	Rate	Size	% Good	Cash Value
D/W/P: 4in Concrete	7.01	1160	45	3,659
Wood Frame	29.04	100	52	1,510
Total Estimated Land Improvements True Cash Value =				5,169

Year	Land Value	Building Value	Assessed Value	Board of Review	Tribunal/ Other	Taxable Value
2024	13,600	84,500	98,100			60,279C
2023	10,900	69,700	80,600			57,409C
2022	8,000	59,300	67,300			54,676C
2021	9,100	60,100	69,200			52,930C

*** Information herein deemed reliable but not guaranteed***

Building Type

X	Single Family
	Mobile Home
	Town Home
	Duplex
	A-Frame
X	Wood Frame

Building Style: PLAIN

Yr Built	Remodeled
1975	0

Condition: Good

Room List

	Basement
	1st Floor
	2nd Floor
	Bedrooms

(1) Exterior

	Wood/Shingle
X	Aluminum/Vinyl
	Brick
X	Insulation

(2) Windows

	Many		Large
X	Avg.	X	Avg.
	Few		Small

	Wood Sash
	Metal Sash
X	Vinyl Sash
	Double Hung
	Horiz. Slide
	Casement
	Double Glass
	Patio Doors
X	Storms & Screens

(3) Roof

X	Gable		Gambrel
	Hip		Mansard
	Flat		Shed

X	Asphalt Shingle

Chimney:

(3) Roof (cont.)

	Eavestrough
X	Insulation
0	Front Overhang
0	Other Overhang

(4) Interior

X	Drywall		Plaster
	Paneled		Wood T&G

Trim & Decoration

	Ex	X	Ord		Min

Size of Closets

	Lg	X	Ord		Small

Doors:		Solid	X	H.C.	

(5) Floors

Kitchen:
Other: Linoleum
Other: Carpeted

(6) Ceilings

X	Drywall		

(7) Excavation

Basement: 676 S.F.
Crawl: 0 S.F.
Slab: 676 S.F.
Height to Joists: 0.0

(8) Basement

	Conc. Block
	Poured Conc.
	Stone
	Treated Wood
	Concrete Floor

(9) Basement Finish

	Recreation SF
	Living SF
	Walkout Doors (B)
	No Floor SF
	Walkout Doors (A)

(10) Floor Support

Joists:
Unsupported Len:
Cntr.Sup:

(11) Heating/Cooling

X	Gas		Oil		Elec.
	Wood		Coal		Steam

	Forced Air w/o Ducts
X	Forced Air w/ Ducts
	Forced Hot Water
	Electric Baseboard
	Elec. Ceil. Radiant
	Radiant (in-floor)
	Electric Wall Heat
	Space Heater
	Wall/Floor Furnace
	Forced Heat & Cool
	Heat Pump
	No Heating/Cooling

	Central Air
	Wood Furnace

(12) Electric

150	Amps Service

No./Qual. of Fixtures

	Ex.	X	Ord.		Min

No. of Elec. Outlets

	Many	X	Ave.		Few

(13) Plumbing

1	Average Fixture(s)
	3 Fixture Bath
	2 Fixture Bath
	Softener, Auto
	Softener, Manual
	Solar Water Heat
	No Plumbing
	Extra Toilet
	Extra Sink
	Separate Shower
	Ceramic Tile Floor
	Ceramic Tile Wains
	Ceramic Tub Alcove
	Vent Fan

(14) Water/Sewer

	Public Water
	Public Sewer
1	Water Well
1	1000 Gal Septic
	2000 Gal Septic

Lump Sum Items:

(15) Built-ins

	Appliance Allow.
	Cook Top
	Dishwasher
	Garbage Disposal
	Bath Heater
	Vent Fan
	Hot Tub
	Unvented Hood
	Vented Hood
	Intercom
	Jacuzzi Tub
	Jacuzzi repl.Tub
	Oven
	Microwave
	Standard Range
	Self Clean Range
	Sauna
	Trash Compactor
	Central Vacuum
	Security System

(15) Fireplaces

	Interior 1 Story
	Interior 2 Story
	2nd/Same Stack
	Two Sided
	Exterior 1 Story
	Exterior 2 Story
	Prefab 1 Story
	Prefab 2 Story
	Heat Circulator
	Raised Hearth
	Wood Stove
	Direct-Vented Gas

Class: CD
Effec. Age: 48
Floor Area: 1,352
Total Base New : 242,845 E.C.F.
Total Depr Cost: 126,281 X 1.297
Estimated T.C.V: 163,786

(16) Porches/Decks

Area	Type
350	CCP (1 Story)
192	WSEP (1 Story)
297	WPP

(17) Garage

Year Built:
Car Capacity:
Class: CD
Exterior: Siding
Brick Ven.: 0
Stone Ven.: 0
Common Wall: 1 Wall
Foundation: 42 Inch
Finished ?:
Auto. Doors: 0
Mech. Doors: 0
Area: 528
% Good: 0
Storage Area: 0
No Conc. Floor: 0

Bsmnt Garage:

Carport Area:
Roof:

Cost Est. for Res. Bldg: 1 Single Family PLAIN Cls CD Blt 1975
(11) Heating System: Forced Air w/ Ducts
Ground Area = 1352 SF Floor Area = 1352 SF.
Phy/Ab.Phy/Func/Econ/Comb. % Good=52/100/100/100/52

Building Areas

Stories	Exterior	Foundation	Size	Cost New	Depr. Cost
1 Story	Siding	Basement	676		
1 Story	Siding	Slab	676		
			Total:	165,283	85,948
Other Additions/Adjustments					
Water/Sewer					
1000 Gal Septic			1	4,582	2,383
Water Well, 100 Feet			1	5,680	2,954
Porches					
CCP (1 Story)			350	7,851	4,083
WSEP (1 Story)			192	8,872	4,613
WPP			297	4,500	2,340
Garages					
Class: CD Exterior: Siding Foundation: 42 Inch (Unfinished)					
Base Cost			528	21,120	10,982
Common Wall: 1 Wall			1	-2,529	-1,315
Class: CD Exterior: Pole (Unfinished)					
Base Cost			1200	26,100	13,572
Local Cost Items					
POLE LEAN TO			264	1,386	721
			Totals:	242,845	126,281

Notes:

ECF (RESIDENTIAL) 1.297 => TCV: 163,786

*** Information herein deemed reliable but not guaranteed***

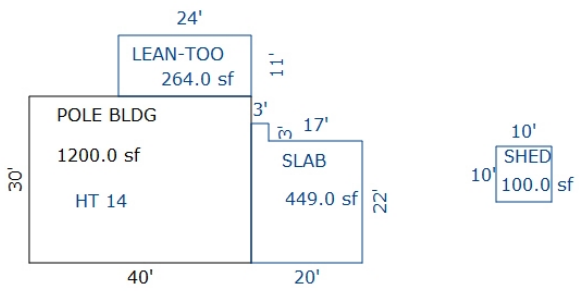

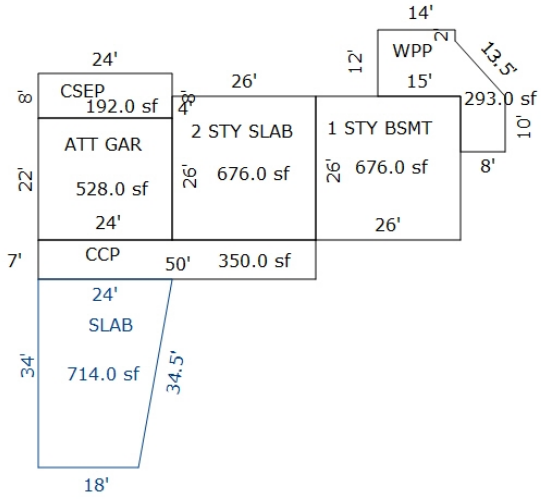

Sketch by Apex Sketch

*** Information herein deemed reliable but not guaranteed***

Parcel Number: 2410-06-3205 Jurisdiction: GREENWOOD TWP County: WEXFORD Printed on 02/15/2024

Grantor	Grantee	Sale Price	Sale Date	Inst. Type	Terms of Sale	Liber & Page	Verified By	Prcnt. Trans.
SMITH, ROBERT F.	HUDSON, JAMES L.	4,000	08/07/1989	LC	03-ARM'S LENGTH	317:125	DEED	0.0

Property Address
11454 N 25 RD

Owner's Name/Address
HUDSON, JAMES L. & SANDRA K. (ET AL) 11480 N 25 RD KINGSLEY MI 49649

Tax Description
N 350 FT OF N 700 FT OF FRL W 1/2 OF FRL SW 1/4 LYING E OF CO RD EXC PAR COM AT INT OF E-W 1/4-LINE & C/L OF RD: TH E 175 FT; S 175 FT; W 265 FT TO C/L OF RD; NE'LY TO POB. --3.41 A M/L-- GW. SEC. 6 T24N R10W -KINGSLEY-

Comments/Influences

The Equalizer. Copyright (c) 1999 - 2009.
Licensed To: Township of Greenwood, County of Wexford, Michigan

Class: RESIDENTIAL-IMPROV Zoning:
School: KINGSLEY AREA SCHOOL
P.R.E. 100% / /
:
2024 Est TCV 87,774 TCV/TFA: 65.02

Building Permit(s)	Date	Number	Status

X	Improved		Vacant

	Public Improvements
	Dirt Road
	Gravel Road
X	Paved Road
	Storm Sewer
	Sidewalk
	Water
	Sewer
X	Electric
	Gas
	Curb
	Street Lights
	Standard Utilities
	Underground Utils.

	Topography of Site
	Level
X	Rolling
	Low
	High
	Landscaped
	Swamp
X	Wooded
	Pond
	Waterfront
	Ravine
	Wetland
	Flood Plain
X	OPEN/PINES

Who	When	What
GLA	05/08/2016	INSPECTION

Land Value Estimates for Land Table 4010.LAND VALUES

Description	Frontage	Depth	* Factors * Front	Depth	Rate	%Adj.	Reason	Value
ACREAGE			3.260 Acres		5,381	100		17,543
ROW			0.150 Acres		0	100		0
			3.41 Total Acres		Total Est. Land Value =			17,543

Year	Land Value	Building Value	Assessed Value	Board of Review	Tribunal/ Other	Taxable Value
2024	8,800	35,100	43,900			29,769C
2023	7,700	28,200	35,900			28,352C
2022	6,600	23,600	30,200			27,002C
2021	6,800	21,000	27,800			26,140C

*** Information herein deemed reliable but not guaranteed***

Building Type

	Single Family
X	Mobile Home
	Town Home
	Duplex
	A-Frame

X	Wood Frame

Building Style: SWT/DWT

Yr Built	Remodeled
0	0

Condition: Good

Room List

	Basement
	1st Floor
	2nd Floor
	Bedrooms

(1) Exterior

	Wood/Shingle
X	Aluminum/Vinyl
	Brick
X	Insulation

(2) Windows

	Many		Large
X	Avg.	X	Avg.
	Few		Small

	Wood Sash
	Metal Sash
X	Vinyl Sash
	Double Hung
	Horiz. Slide
	Casement
	Double Glass
	Patio Doors
X	Storms & Screens

(3) Roof

X	Gable		Gambrel
	Hip		Mansard
	Flat		Shed

X	Asphalt Shingle

Chimney:

(3) Roof (cont.)

	Eavestrough
X	Insulation
0	Front Overhang
0	Other Overhang

(4) Interior

X	Drywall		Plaster
	Paneled		Wood T&G

Trim & Decoration

	Ex	X	Ord		Min

Size of Closets

	Lg	X	Ord		Small

Doors:		Solid	X	H.C.	

(5) Floors

Kitchen:
Other: Linoleum
Other: Carpeted

(6) Ceilings

X	Drywall		

(7) Excavation

Basement: 0 S.F.
Crawl: 0 S.F.
Slab: 0 S.F.
Height to Joists: 0.0

(8) Basement

	Conc. Block
	Poured Conc.
	Stone
	Treated Wood
	Concrete Floor

(9) Basement Finish

	Recreation SF
	Living SF
	Walkout Doors (B)
	No Floor SF
	Walkout Doors (A)

(10) Floor Support

Joists:
Unsupported Len:
Cntr.Sup:

(11) Heating/Cooling

X	Gas		Oil		Elec.
	Wood		Coal		Steam

X	Forced Warm Air
	Wall Furnace
	Warm & Cool Air
	Heat Pump
	Central Air
	Wood Furnace

(12) Electric

150	Amps Service

No./Qual. of Fixtures

	Ex.	X	Ord.		Min

No. of Elec. Outlets

	Many	X	Ave.		Few

(13) Plumbing

2	Average Fixture(s)
	3 Fixture Bath
	2 Fixture Bath
	Softener, Auto
	Softener, Manual
	Solar Water Heat
	No Plumbing
	Extra Toilet
	Extra Sink
	Separate Shower
	Ceramic Tile Floor
	Ceramic Tile Wains
	Ceramic Tub Alcove
	Vent Fan

(14) Water/Sewer

	Public Water
	Public Sewer
1	Water Well
1	1000 Gal Septic
	2000 Gal Septic

Lump Sum Items:

(15) Built-ins

	Appliance Allow.
	Cook Top
	Dishwasher
	Garbage Disposal
	Bath Heater
	Vent Fan
	Hot Tub
	Unvented Hood
	Vented Hood
	Intercom
	Jacuzzi Tub
	Jacuzzi repl.Tub
	Oven
	Microwave
	Standard Range
	Self Clean Range
	Sauna
	Trash Compactor
	Central Vacuum
	Security System

(15) Fireplaces

	Interior 1 Story
	Interior 2 Story
	2nd/Same Stack
	Two Sided
	Exterior 1 Story
	Exterior 2 Story
	Prefab 1 Story
	Prefab 2 Story
	Heat Circulator
	Raised Hearth
	Wood Stove
	Direct-Vented Gas

Class: Fair
Effec. Age: 20
Floor Area:
Total Base New : 117,714 E.C.F.
Total Depr Cost: 54,149 X 1.297
Estimated T.C.V: 70,231

(16) Porches/Decks

Area	Type
216	WPP

(17) Garage

Year Built:
Car Capacity:
Class: CD
Exterior: Siding
Brick Ven.: 0
Stone Ven.: 0
Common Wall: Detache
Foundation: 18 Inch
Finished ?:
Auto. Doors: 0
Mech. Doors: 0
Area: 576
% Good: 0
Storage Area: 0
No Conc. Floor: 0

Bsmnt Garage:

Carport Area:
Roof:

Cost Est. for Res. Bldg: 1 Mobile Home SWT/DWT Cls Fair Blt 0
(11) Heating System: Forced Warm Air
Ground Area = 1350 SF Floor Area = 1350 SF.
Phy/Ab.Phy/Func/Econ/Comb. % Good=46/100/100/100/46
Building Areas

Type	Ext. Walls	Roof/Fnd.	Size	Cost New	Depr. Cost
Main Home	Siding	Comp.Shingle	1350		
			Total:	78,658	36,182
Other Additions/Adjustments					
Skirting, Metal or Vinyl, Vertical			150	1,673	770
Plumbing					
3 Fixture Bath			1	2,745	1,263
Water/Sewer					
1000 Gal Septic			1	4,582	2,108
Water Well, 100 Feet			1	5,680	2,613
Porches					
WPP			216	4,441	2,043
Garages					
Class: CD Exterior: Siding Foundation: 18 Inch (Unfinished)					
Base Cost			576	19,935	9,170
			Totals:	117,714	54,149

Notes:
ECF (RESIDENTIAL) 1.297 => TCV: 70,231

*** Information herein deemed reliable but not guaranteed***

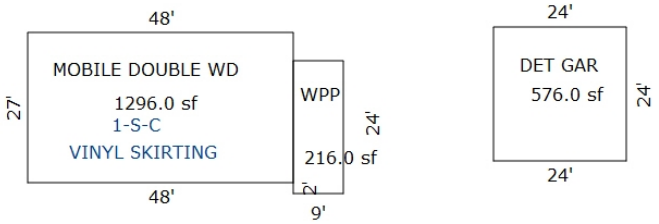

Sketch by Apex Sketch

*** Information herein deemed reliable but not guaranteed***

Parcel Number: 2410-06-3206 Jurisdiction: GREENWOOD TWP County: WEXFORD Printed on 02/15/2024

Grantor	Grantee	Sale Price	Sale Date	Inst. Type	Terms of Sale	Liber & Page	Verified By	Prcnt. Trans.
FIFTH THIRD MORTGAGE CO	WENZLICK, EMILY R.	103,000	02/25/2015	WD	03-ARM'S LENGTH	674/1126	DEED	100.0
FIFTH THIRD MORTGAGE CO	WENZLICK, EMILY R	103,000	02/12/2015	WD	11-FROM LENDING INSTITUTI	674/1126	DEED	100.0
CANFIELD, JEZREEL J	FIFTH THIRD MORTGAGE CO	0	04/25/2014	SD	10-FORECLOSURE	667/2159	DEED	0.0
SUNDELIUS, TAMMY M FKA CAN	CANFIELD, JEZREEL J	0	01/09/2013	QC	06-COURT JUDGEMENT	655/1869	DEED	0.0

Property Address

11310 N 25 RD

Owner's Name/Address

WENZLICK, EMILY R
11310 N 25 RD
KINGSLEY MI 49649

Tax Description

S 275 FT OF N 975 FT OF W 1/2 OF SW 1/4 LYING E OF 25 RD. --5.03 A M/L-- GW. SEC. 6 T24N R10W -KINGSLEY-

Comments/Influences

The Equalizer. Copyright (c) 1999 - 2009. Licensed To: Township of Greenwood, County of Wexford, Michigan

Class: RESIDENTIAL-IMPROV Zoning:

School: KINGSLEY AREA SCHOOL

P.R.E. 100% 03/23/2015

:

2024 Est TCV 275,303 TCV/TFA: 189.08

Building Permit(s)	Date	Number	Status
Pole Barn	06/03/2021	PB21-0132	ENTERED

X	Improved		Vacant

	Public Improvements
	Dirt Road
	Gravel Road
X	Paved Road
	Storm Sewer
	Sidewalk
	Water
	Sewer
X	Electric
	Gas
	Curb
	Street Lights
	Standard Utilities
	Underground Utils.

	Topography of Site
X	Level
X	Rolling
	Low
	High
	Landscaped
	Swamp
X	Wooded
	Pond
	Waterfront
	Ravine
	Wetland
	Flood Plain
X	OPEN/PINES

Who	When	What
GLA	11/01/2021	INSPECTION
GLA	05/08/2016	INSPECTION

Land Value Estimates for Land Table 4010.LAND VALUES

Description	Frontage	Depth	* Factors * Front	Depth	Rate	%Adj.	Reason	Value
	275.00	797.00	1.0000	0.0000	0	100*		0
ACREAGE			5.030 Acres		5,112	100		25,713

* denotes lines that do not contribute to the total acreage calculation.

275 Actual Front Feet, 5.03 Total Acres Total Est. Land Value = 25,713

Land Improvement Cost Estimates

Description	Rate	Size	% Good	Cash Value
D/W/P: 3.5 Concrete	6.21	2355	50	7,312
D/W/P: 3.5 Concrete	6.21	448	50	1,391
Wood Frame	31.41	64	71	1,427
Total Estimated Land Improvements True Cash Value =				10,130

Year	Land Value	Building Value	Assessed Value	Board of Review	Tribunal/ Other	Taxable Value
2024	12,900	124,800	137,700			85,561C
2023	10,800	102,600	113,400			81,487C
2022	7,500	87,100	94,600			77,607C
2021	8,600	67,900	76,500			54,606C

*** Information herein deemed reliable but not guaranteed***

Building Type

X	Single Family
	Mobile Home
	Town Home
	Duplex
	A-Frame
X	Wood Frame

Building Style: PLAIN

Yr Built	Remodeled
0	0

Condition: Good

Room List

	Basement
	1st Floor
	2nd Floor
	Bedrooms

(1) Exterior

	Wood/Shingle
X	Aluminum/Vinyl
	Brick
X	Insulation

(2) Windows

X	Many Avg. Few	X	Large Avg. Small

	Wood Sash
	Metal Sash
X	Vinyl Sash
	Double Hung
	Horiz. Slide
	Casement
	Double Glass
	Patio Doors
X	Storms & Screens

(3) Roof

X	Gable		Gambrel
	Hip		Mansard
	Flat		Shed

X	Asphalt Shingle

Chimney:

(3) Roof (cont.)

	Eavestrough
X	Insulation
0	Front Overhang
0	Other Overhang

(4) Interior

X	Drywall		Plaster
	Paneled		Wood T&G

Trim & Decoration

	Ex	X	Ord		Min

Size of Closets

	Lg	X	Ord		Small

Doors:		Solid	X	H.C.	

(5) Floors

Kitchen:
Other: Linoleum
Other: Carpeted

(6) Ceilings

X	Drywall

(7) Excavation

Basement: 896 S.F.
Crawl: 560 S.F.
Slab: 0 S.F.
Height to Joists: 0.0

(8) Basement

	Conc. Block
	Poured Conc.
	Stone
	Treated Wood
	Concrete Floor

(9) Basement Finish

	Recreation	SF
	Living	SF
1	Walkout Doors (B)	
	No Floor	SF
	Walkout Doors (A)	

(10) Floor Support

Joists:
Unsupported Len:
Cntr.Sup:

(11) Heating/Cooling

X	Gas		Oil		Elec.
	Wood		Coal		Steam

	Forced Air w/o Ducts
X	Forced Air w/ Ducts
	Forced Hot Water
	Electric Baseboard
	Elec. Ceil. Radiant
	Radiant (in-floor)
	Electric Wall Heat
	Space Heater
	Wall/Floor Furnace
	Forced Heat & Cool
	Heat Pump
	No Heating/Cooling

	Central Air
	Wood Furnace

(12) Electric

150	Amps Service

No./Qual. of Fixtures

	Ex.	X	Ord.		Min

No. of Elec. Outlets

	Many	X	Ave.		Few

(13) Plumbing

2	Average Fixture(s)
	3 Fixture Bath
	2 Fixture Bath
	Softener, Auto
	Softener, Manual
	Solar Water Heat
	No Plumbing
	Extra Toilet
	Extra Sink
	Separate Shower
	Ceramic Tile Floor
	Ceramic Tile Wains
	Ceramic Tub Alcove
	Vent Fan

(14) Water/Sewer

	Public Water
	Public Sewer
1	Water Well
1	1000 Gal Septic
	2000 Gal Septic

Lump Sum Items:

(15) Built-ins

	Appliance Allow.
	Cook Top
	Dishwasher
	Garbage Disposal
	Bath Heater
	Vent Fan
	Hot Tub
	Unvented Hood
	Vented Hood
	Intercom
	Jacuzzi Tub
	Jacuzzi repl.Tub
	Oven
	Microwave
	Standard Range
	Self Clean Range
	Sauna
	Trash Compactor
	Central Vacuum
	Security System

(15) Fireplaces

	Interior 1 Story
	Interior 2 Story
	2nd/Same Stack
	Two Sided
	Exterior 1 Story
	Exterior 2 Story
	Prefab 1 Story
	Prefab 2 Story
	Heat Circulator
	Raised Hearth
	Wood Stove
	Direct-Vented Gas

Class: CD
Effec. Age: 29
Floor Area: 1,456
Total Base New : 260,035 E.C.F.
Total Depr Cost: 184,626 X 1.297
Estimated T.C.V: 239,460

(16) Porches/Decks

Area	Type
80	WCP (1 Story)
24	WPP

(17) Garage

Year Built:
Car Capacity:
Class: CD
Exterior: Siding
Brick Ven.: 0
Stone Ven.: 0
Common Wall: 1 Wall
Foundation: 42 Inch
Finished ?:
Auto. Doors: 0
Mech. Doors: 0
Area: 634
% Good: 0
Storage Area: 0
No Conc. Floor: 0

Bsmnt Garage:

Carport Area:
Roof:

Cost Est. for Res. Bldg: 1 Single Family PLAIN Cls CD Blt 0
(11) Heating System: Forced Air w/ Ducts
Ground Area = 1456 SF Floor Area = 1456 SF.
Phy/Ab.Phy/Func/Econ/Comb. % Good=71/100/100/100/71
Building Areas

Stories	Exterior	Foundation	Size	Cost New	Depr. Cost
1 Story	Siding	Basement	896		
1 Story	Siding	Crawl Space	560		
			Total:	180,440	128,113
Other Additions/Adjustments					
Basement, Outside Entrance, Below Grade			1	2,176	1,545
Plumbing					
3 Fixture Bath			1	3,887	2,760
Water/Sewer					
1000 Gal Septic			1	4,582	3,253
Water Well, 100 Feet			1	5,680	4,033
Porches					
WCP (1 Story)			80	3,856	2,738
WPP			24	1,207	857
Garages					
Class: CD Exterior: Siding Foundation: 42 Inch (Unfinished)					
Base Cost			634	23,934	16,993
Common Wall: 1 Wall			1	-2,529	-1,796
Class: D Exterior: Pole (Unfinished)					
Base Cost			1792	34,460	24,467
Local Cost Items					
WOOD LEAN TO			384	2,342	1,663
			Totals:	260,035	184,626

Notes:
ECF (RESIDENTIAL) 1.297 => TCV: 239,460

*** Information herein deemed reliable but not guaranteed***

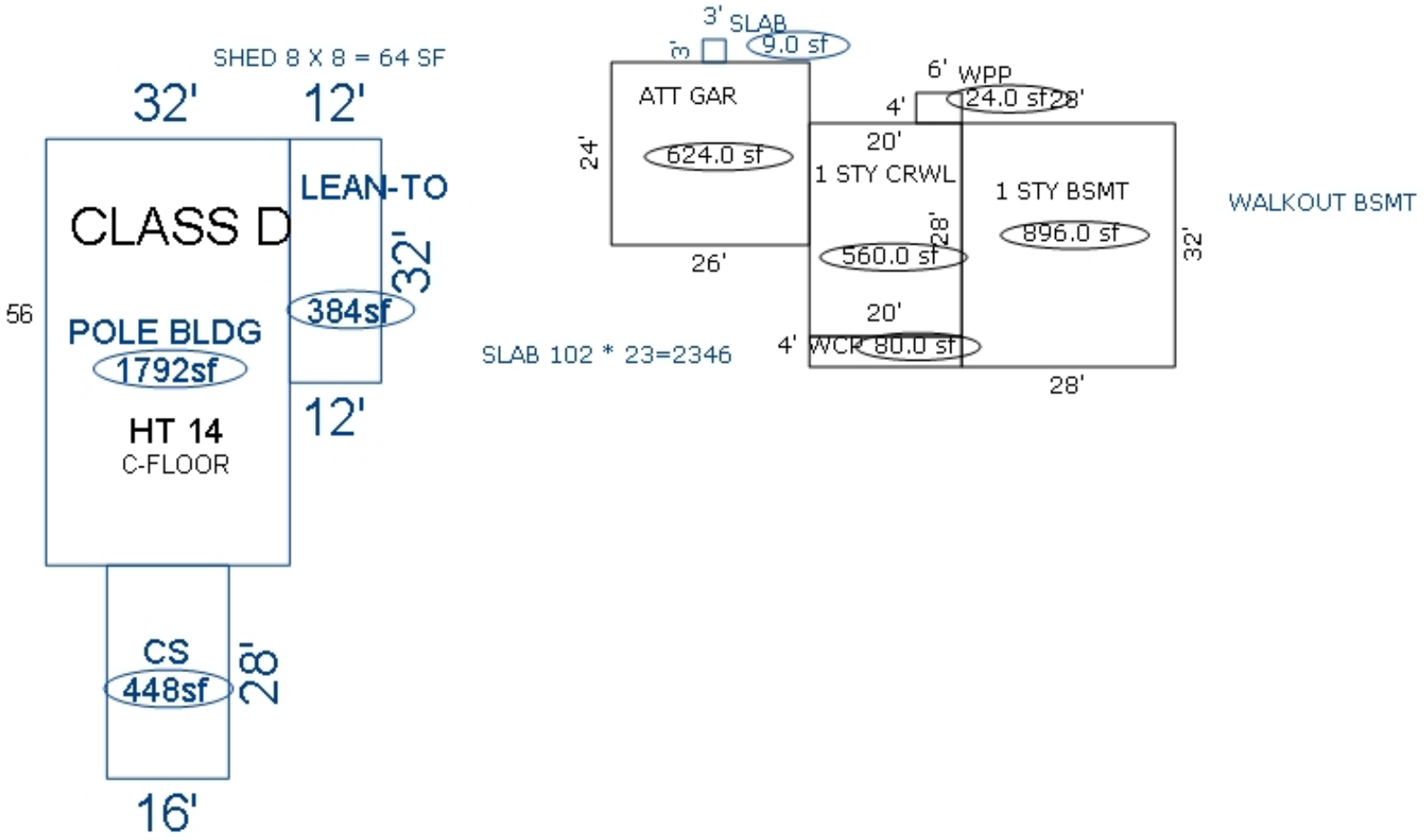

*** Information herein deemed reliable but not guaranteed***

Parcel Number: 2410-06-3207 Jurisdiction: GREENWOOD TWP County: WEXFORD Printed on 02/15/2024

Grantor	Grantee	Sale Price	Sale Date	Inst. Type	Terms of Sale	Liber & Page	Verified By	Prcnt. Trans.
GARDNER, RICHARD O SR	TRAYLOR ZACHARY	0	06/19/2023	QC	21-NOT USED/OTHER	695/1584	DEED	100.0
TRAYLOR, JOSEPH E	GARDNER, RICHARD O & PHILI	0	03/09/2007	QC	21-NOT USED/OTHER	598:7	DEED	100.0
ARLT, DONALD R.	TRAYLOR, JOSEPH E.	7,000	09/02/1992	QC	09-FAMILY	331:25	DEED	0.0

Property Address

Owner's Name/Address

TRAYLOR ZACHARY
11252 N 25 RD
KINGSLEY MI 49649

Tax Description

S 550 FT OF N 1525 FT OF FRL W 1/2 OF SW 1/4 LYING E'LY OF W LINE OF R/W OF N 25 RD. --10.01 A M/L-- GW. SEC. 6 T24N R10W -KINGSLEY-

Comments/Influences

Class: RESIDENTIAL-IMPROV Zoning:

School: KINGSLEY AREA SCHOOL

P.R.E. 0%

:

2024 Est TCV 61,256 TCV/TFA: 62.51

Building Permit(s)	Date	Number	Status

X	Improved		Vacant

	Public Improvements
	Dirt Road
	Gravel Road
X	Paved Road
	Storm Sewer
	Sidewalk
	Water
	Sewer
X	Electric
	Gas
	Curb
	Street Lights
	Standard Utilities
	Underground Utils.

	Topography of Site
X	Level
X	Rolling
	Low
	High
	Landscaped
	Swamp
X	Wooded
	Pond
	Waterfront
	Ravine
	Wetland
	Flood Plain
X	OPEN/PINES

Who	When	What
GLA	05/08/2016	INSPECTION

Land Value Estimates for Land Table 4010.LAND VALUES

Description	Frontage	Depth	* Factors * Front	Depth	Rate	%Adj.	Reason	Value
ACREAGE			10.010 Acres		4,631	100		46,353
			10.01 Total Acres		Total Est. Land Value =			46,353

Land Improvement Cost Estimates

Description	Rate	Size	% Good	Cash Value
Wood Frame	19.35	240	25	1,161
Wood Frame	28.00	64	25	448
Total Estimated Land Improvements True Cash Value =				1,609

Year	Land Value	Building Value	Assessed Value	Board of Review	Tribunal/ Other	Taxable Value
2024	23,200	7,400	30,600			30,600S
2023	13,000	6,200	19,200			10,120C
2022	12,000	5,300	17,300			9,639C
2021	12,000	4,700	16,700			9,332C

The Equalizer. Copyright (c) 1999 - 2009.
Licensed To: Township of Greenwood, County of Wexford, Michigan

*** Information herein deemed reliable but not guaranteed***

Building Type

	Single Family
X	Mobile Home
	Town Home
	Duplex
	A-Frame

X	Wood Frame

Building Style: PLAIN

Yr Built	Remodeled
0	0

Condition: Good

Room List

	Basement
	1st Floor
	2nd Floor
	Bedrooms

(1) Exterior

	Wood/Shingle
X	Aluminum/Vinyl
	Brick
X	Insulation

(2) Windows

	Many		Large
X	Avg.	X	Avg.
	Few		Small

	Wood Sash
	Metal Sash
X	Vinyl Sash
	Double Hung
	Horiz. Slide
	Casement
	Double Glass
	Patio Doors
X	Storms & Screens

(3) Roof

X	Gable		Gambrel
	Hip		Mansard
	Flat		Shed

X	Asphalt Shingle

Chimney:

(3) Roof (cont.)

	Eavestrough
X	Insulation
0	Front Overhang
0	Other Overhang

(4) Interior

X	Drywall		Plaster
	Paneled		Wood T&G

Trim & Decoration

	Ex	X	Ord		Min

Size of Closets

	Lg	X	Ord		Small

Doors:		Solid	X	H.C.	

(5) Floors

Kitchen:
Other: Linoleum
Other: Carpeted

(6) Ceilings

X	Drywall		

(7) Excavation

Basement: 0 S.F.
Crawl: 296 S.F.
Slab: 0 S.F.
Height to Joists: 0.0

(8) Basement

	Conc. Block
	Poured Conc.
	Stone
	Treated Wood
	Concrete Floor

(9) Basement Finish

	Recreation SF
	Living SF
	Walkout Doors (B)
	No Floor SF
	Walkout Doors (A)

(10) Floor Support

Joists:
Unsupported Len:
Cntr.Sup:

(11) Heating/Cooling

X	Gas		Oil		Elec.
	Wood		Coal		Steam

X	Forced Warm Air
	Wall Furnace
	Warm & Cool Air
	Heat Pump

	Central Air
	Wood Furnace

(12) Electric

150	Amps Service

No./Qual. of Fixtures

	Ex.	X	Ord.		Min

No. of Elec. Outlets

	Many	X	Ave.		Few

(13) Plumbing

	Average Fixture(s)
1	3 Fixture Bath
	2 Fixture Bath
	Softener, Auto
	Softener, Manual
	Solar Water Heat
	No Plumbing
	Extra Toilet
	Extra Sink
	Separate Shower
	Ceramic Tile Floor
	Ceramic Tile Wains
	Ceramic Tub Alcove
	Vent Fan

(14) Water/Sewer

	Public Water
	Public Sewer
1	Water Well
1	1000 Gal Septic
	2000 Gal Septic

Lump Sum Items:

(15) Built-ins

	Appliance Allow.
	Cook Top
	Dishwasher
	Garbage Disposal
	Bath Heater
	Vent Fan
	Hot Tub
	Unvented Hood
	Vented Hood
	Intercom
	Jacuzzi Tub
	Jacuzzi repl.Tub
	Oven
	Microwave
	Standard Range
	Self Clean Range
	Sauna
	Trash Compactor
	Central Vacuum
	Security System

(15) Fireplaces

	Interior 1 Story
	Interior 2 Story
	2nd/Same Stack
	Two Sided
	Exterior 1 Story
	Exterior 2 Story
	Prefab 1 Story
	Prefab 2 Story
	Heat Circulator
	Raised Hearth
	Wood Stove
	Direct-Vented Gas

Class: Low
Effec. Age: 58
Floor Area:
Total Base New : 95,651 E.C.F.
Total Depr Cost: 10,250 X 1.297
Estimated T.C.V: 13,294

(16) Porches/Decks

Area	Type
224	WGEP (1 Story)
175	WPP

(17) Garage

Year Built:
Car Capacity:
Class:
Exterior:
Brick Ven.:
Stone Ven.:
Common Wall:
Foundation:
Finished ?:
Auto. Doors:
Mech. Doors:
Area:
% Good:
Storage Area:
No Conc. Floor:

Bsmnt Garage:

Carport Area:
Roof:

Cost Est. for Res. Bldg: 1 Mobile Home PLAIN Cls Low Blt 0
(11) Heating System: Wall Furnace
Ground Area = 980 SF Floor Area = 980 SF.
Phy/Ab.Phy/Func/Econ/Comb. % Good=35/100/30/100/10.5
Functional Depreciation because of: POOR SHAPE
Building Areas

Type	Ext. Walls	Roof/Fnd.	Size	Cost New	Depr. Cost	
Main Home	Ribbed	Metal	684			
Addition	Siding	Crawl	168			
Addition	Siding	Crawl	128			
Expando			168			
		Total:		62,706	6,583	
Other Additions/Adjustments						
Skirting, Metal or Vinyl, Vertical			81	880	92	
Water/Sewer						
1000 Gal Septic			1	4,293	451	
Water Well, 100 Feet			1	5,545	582	
Porches						
WGEP (1 Story)			224	11,061	1,161	
WPP			175	3,428	360	
Local Cost Items						
SHED			992	7,738	1,021	*4
		Totals:		95,651	10,250	

Notes:

ECF (RESIDENTIAL) 1.297 => TCV: 13,294

*** Information herein deemed reliable but not guaranteed***

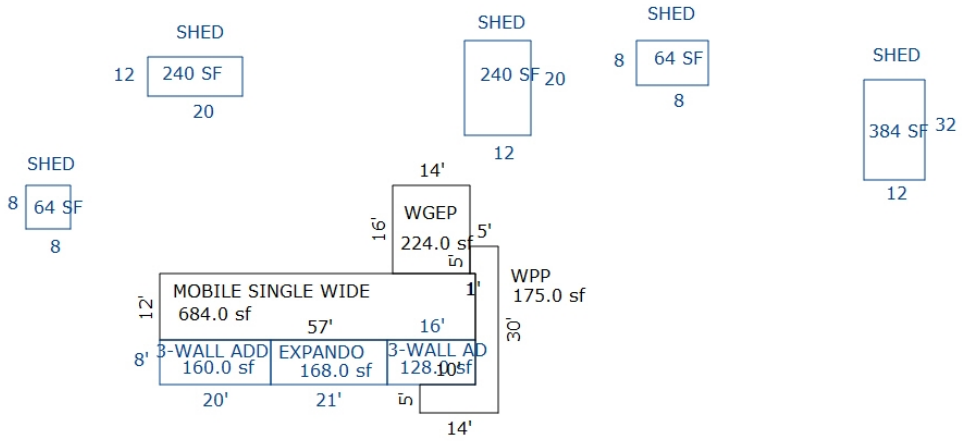

Sketch by Apex Sketch

*** Information herein deemed reliable but not guaranteed***

Parcel Number: 2410-06-3208 Jurisdiction: GREENWOOD TWP County: WEXFORD Printed on 02/15/2024

Grantor	Grantee	Sale Price	Sale Date	Inst. Type	Terms of Sale	Liber & Page	Verified By	Prcnt. Trans.

Property Address

45 E 4 RD

Owner's Name/Address

DEMETER, CHRISTOPHER
& CAROLINE M
45 E 4 RD
KINGSLEY MI 49649-9522

Tax Description

FRL W 1/2 OF FRL SW 1/4 EXC N 2082.5 FT & EXC E 396 FT THEREOF SUB TO EASMNT.
--4.84 A M/L-- GW. SEC. 6 T24N R10W
-KINGSLEY-

Comments/Influences

The Equalizer. Copyright (c) 1999 - 2009. Licensed To: Township of Greenwood, County of Wexford, Michigan

Class: RESIDENTIAL-IMPROV Zoning:

School: KINGSLEY AREA SCHOOL

P.R.E. 100% 04/30/2007

:

2024 Est TCV 362,341 TCV/TFA: 164.10

Building Permit(s)	Date	Number	Status
RESIDENTIAL - REMODEL	06/26/2007	PB13578	
RESIDENTIAL - NEW	09/26/2000	PM4466	
RESIDENTIAL - NEW	07/31/2000	PM4289	
RESIDENTIAL - NEW	07/27/2000	PP1910	

X Improved | Vacant

	Public Improvements
X	Dirt Road
	Gravel Road
	Paved Road
	Storm Sewer
	Sidewalk
	Water
	Sewer
X	Electric
	Gas
	Curb
	Street Lights
	Standard Utilities
	Underground Utils.

	Topography of Site
X	Level
X	Rolling
	Low
	High
	Landscaped
	Swamp
	Wooded
	Pond
	Waterfront
	Ravine
	Wetland
	Flood Plain
X	OPEN

Who	When	What
GLA	05/13/2021	INSPECTION

Land Value Estimates for Land Table 4010.LAND VALUES

Description	Frontage	Depth	* Factors * Front	Depth	Rate	%Adj.	Reason	Value
ACREAGE			4.550 Acres		5,080	100		23,112
ROW			0.290 Acres		0	100		0
			4.84 Total Acres		Total Est. Land Value =			23,112

Land Improvement Cost Estimates

Description	Rate	Size	% Good	Cash Value
D/W/P: 3.5 Concrete	6.63	2386	58	9,175
Wood Frame	24.58	224	68	3,744
Total Estimated Land Improvements True Cash Value =				12,919

Year	Land Value	Building Value	Assessed Value	Board of Review	Tribunal/ Other	Taxable Value
2024	11,600	169,600	181,200			98,934C
2023	10,100	139,600	149,700			94,223C
2022	7,300	118,600	125,900			89,737C
2021	8,500	118,500	127,000			86,871C

*** Information herein deemed reliable but not guaranteed***

Building Type

X	Single Family
	Mobile Home
	Town Home
	Duplex
	A-Frame
X	Wood Frame

Building Style: TWO STORY

Yr Built	Remodeled
2000	0

Condition: Good

Room List

	Basement
	1st Floor
	2nd Floor
	Bedrooms

(1) Exterior

	Wood/Shingle
X	Aluminum/Vinyl
	Brick
X	Insulation

(2) Windows

X	Many Avg. Few	X	Large Avg. Small

	Wood Sash
	Metal Sash
X	Vinyl Sash
	Double Hung
	Horiz. Slide
	Casement
	Double Glass
	Patio Doors
X	Storms & Screens

(3) Roof

X	Gable		Gambrel
	Hip		Mansard
	Flat		Shed

X	Asphalt Shingle

Chimney:

(3) Roof (cont.)

	Eavestrough
X	Insulation
0	Front Overhang
0	Other Overhang

(4) Interior

X	Drywall Paneled		Plaster Wood T&G

Trim & Decoration

	Ex	X	Ord		Min

Size of Closets

	Lg	X	Ord		Small

Doors:		Solid	X	H.C.	

(5) Floors

Kitchen:
Other: Linoleum
Other: Carpeted

(6) Ceilings

X	Drywall

(7) Excavation

Basement: 672 S.F.
Crawl: 864 S.F.
Slab: 0 S.F.
Height to Joists: 0.0

(8) Basement

	Conc. Block
	Poured Conc.
	Stone
	Treated Wood
	Concrete Floor

(9) Basement Finish

	Recreation SF
	Living SF
	Walkout Doors (B)
	No Floor SF
	Walkout Doors (A)

(10) Floor Support

Joists:
Unsupported Len:
Cntr.Sup:

(11) Heating/Cooling

X	Gas Wood		Oil Coal		Elec. Steam

	Forced Air w/o Ducts
X	Forced Air w/ Ducts
	Forced Hot Water
	Electric Baseboard
	Elec. Ceil. Radiant
	Radiant (in-floor)
	Electric Wall Heat
	Space Heater
	Wall/Floor Furnace
	Forced Heat & Cool
	Heat Pump
	No Heating/Cooling

	Central Air
	Wood Furnace

(12) Electric

150	Amps Service

No./Qual. of Fixtures

	Ex.	X	Ord.		Min

No. of Elec. Outlets

	Many	X	Ave.		Few

(13) Plumbing

2	Average Fixture(s)
	3 Fixture Bath
	2 Fixture Bath
	Softener, Auto
	Softener, Manual
	Solar Water Heat
	No Plumbing
	Extra Toilet
	Extra Sink
	Separate Shower
	Ceramic Tile Floor
	Ceramic Tile Wains
	Ceramic Tub Alcove
	Vent Fan

(14) Water/Sewer

	Public Water
	Public Sewer
1	Water Well
1	1000 Gal Septic
	2000 Gal Septic

Lump Sum Items:

(15) Built-ins

	Appliance Allow.
	Cook Top
	Dishwasher
	Garbage Disposal
	Bath Heater
	Vent Fan
	Hot Tub
	Unvented Hood
	Vented Hood
	Intercom
	Jacuzzi Tub
	Jacuzzi repl.Tub
	Oven
	Microwave
	Standard Range
	Self Clean Range
	Sauna
	Trash Compactor
	Central Vacuum
	Security System

(15) Fireplaces

	Interior 1 Story
	Interior 2 Story
	2nd/Same Stack
	Two Sided
	Exterior 1 Story
	Exterior 2 Story
	Prefab 1 Story
	Prefab 2 Story
	Heat Circulator
	Raised Hearth
	Wood Stove
	Direct-Vented Gas

Class: C
Effec. Age: 34
Floor Area: 2,208
Total Base New : 381,192 E.C.F.
Total Depr Cost: 251,588 X 1.297
Estimated T.C.V: 326,310

(16) Porches/Decks

Area	Type	
80	CCP	(1 Story)
168	WCP	(1 Story)
36	WPP	
128	WCP	(1 Story)
252	WPP	

(17) Garage

Year Built:
Car Capacity:
Class: C
Exterior: Siding
Brick Ven.: 0
Stone Ven.: 0
Common Wall: 1 Wall
Foundation: 42 Inch
Finished ?:
Auto. Doors: 0
Mech. Doors: 0
Area: 576
% Good: 0
Storage Area: 0
No Conc. Floor: 0

Bsmnt Garage:

Carport Area:
Roof:

Cost Est. for Res. Bldg: 1 Single Family TWO STORY Cls C Blt 2000
(11) Heating System: Forced Air w/ Ducts
Ground Area = 1536 SF Floor Area = 2208 SF.
Phy/Ab.Phy/Func/Econ/Comb. % Good=66/100/100/100/66
Building Areas

Stories	Exterior	Foundation	Size	Cost New	Depr. Cost
2 Story	Siding	Basement	672		
1 Story	Siding	Crawl Space	288		
1 Story	Siding	Crawl Space	576		
			Total:	269,031	177,562
Other Additions/Adjustments					
Plumbing					
3 Fixture Bath			1	4,678	3,087
Water/Sewer					
1000 Gal Septic			1	4,899	3,233
Water Well, 100 Feet			1	5,849	3,860
Porches					
CCP (1 Story)			80	2,322	1,533
WCP (1 Story)			168	7,189	4,745
WPP			36	1,765	1,165
WCP (1 Story)			128	5,856	3,865
WPP			252	4,997	3,298
Garages					
Class: C Exterior: Siding Foundation: 42 Inch (Unfinished)					
Base Cost			576	24,981	16,487
Common Wall: 1 Wall			1	-2,705	-1,785
Class: C Exterior: Siding Foundation: 18 Inch (Unfinished)					
Base Cost			224	11,330	7,478
Class: D Exterior: Siding Foundation: 42 Inch (Unfinished)					
Base Cost			1200	34,488	22,762

<<<<< Calculations too long. See Valuation printout for complete pricing. >>>>>

*** Information herein deemed reliable but not guaranteed***

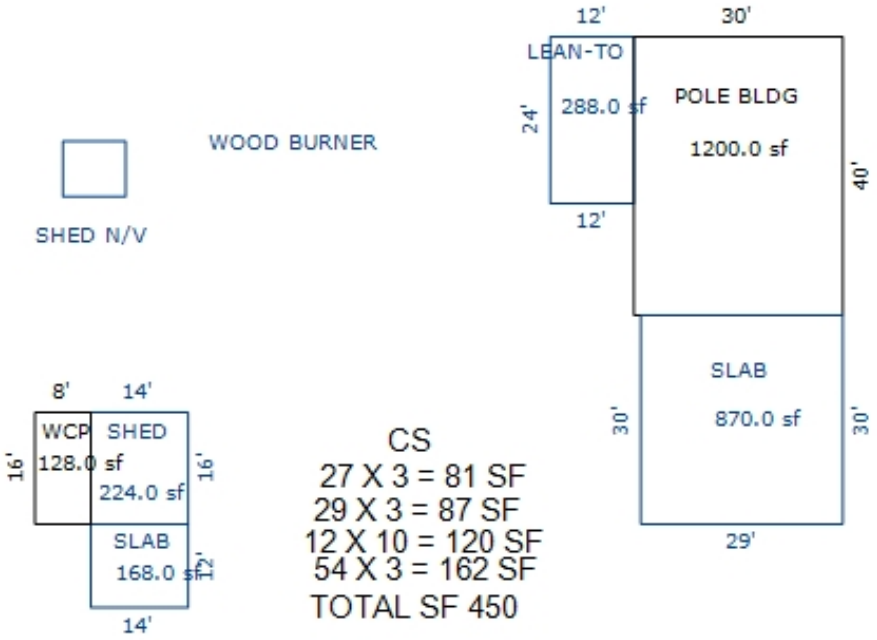

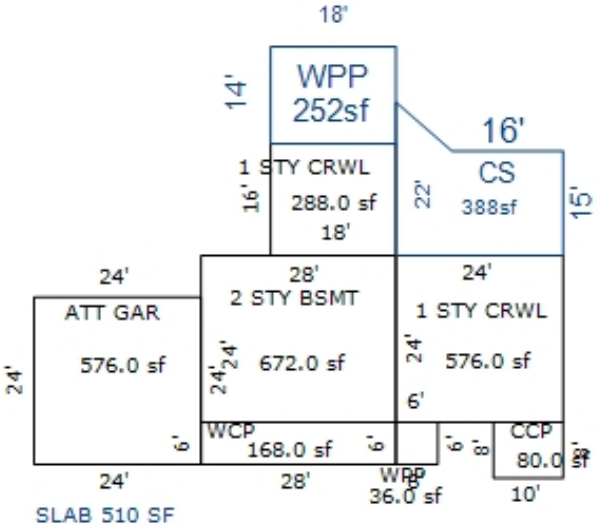

*** Information herein deemed reliable but not guaranteed***

Parcel Number: 2410-06-3209 Jurisdiction: GREENWOOD TWP County: WEXFORD Printed on 02/15/2024

Grantor	Grantee	Sale Price	Sale Date	Inst. Type	Terms of Sale	Liber & Page	Verified By	Prcnt. Trans.
BUSH, JASON	DORNBOS, JONAH	335,000	02/21/2022	WD	03-ARM'S LENGTH	692/752	DEED	100.0
BANK OF NEW YORK MELLON	BUSH, JASON	107,000	06/09/2015	WD	11-FROM LENDING INSTITUTI	675/2116	DEED	100.0
SEITZ, ALLEN	BANK OF NEW YORK MELLON	0	02/28/2014	SD	10-FORECLOSURE	666/483	DEED	0.0
SEITZ, ALLEN		0	02/02/2014	SD	10-FORECLOSURE		DEED	0.0

Property Address

145 E 4 RD

Owner's Name/Address

DORNBOS, JONAH
145 E 4 RD
KINGSLEY MI 49649

Tax Description

E 396 FT OF FRL W 1/2 OF FRL SW 1/4 EXC N 1525 FT THEROF. SUB TO EASEMT 10.09 A M/L GW SEC 6 T24N R10W -KINGSLEY- [[ASSESSED W/ 06-3201 '98

Comments/Influences

Class: RESIDENTIAL-IMPROV Zoning:

School: KINGSLEY AREA SCHOOL

P.R.E. 100% 03/02/2022

:

2024 Est TCV 251,326 TCV/TFA: 241.66

Building Permit(s)	Date	Number	Status
RESIDENTIAL - REMODEL	02/08/2001	PE13504	
RESIDENTIAL - REMODEL	02/05/2001	PB10111	

X Improved | Vacant

Public Improvements

- X Dirt Road
- X Gravel Road
- Paved Road
- Storm Sewer
- Sidewalk
- Water
- Sewer
- X Electric
- Gas
- Curb
- Street Lights
- Standard Utilities
- Underground Utils.

Topography of Site

- X Level
- X Rolling
- Low
- High
- Landscaped
- Swamp
- X Wooded
- Pond
- Waterfront
- Ravine
- Wetland
- Flood Plain
- X OPEN

Who	When	What
GLA	05/13/2021	INSPECTION

Land Value Estimates for Land Table 4010.LAND VALUES

Description	Frontage	Depth	* Factors * Front	Depth	Rate	%Adj.	Reason	Value
ACREAGE			9.765 Acres		4,662	100		45,522
ROW			0.325 Acres		0	100		0
			10.09 Total Acres		Total Est. Land Value =			45,522

Land Improvement Cost Estimates

Description	Rate	Size	% Good	Cash Value
D/W/P: 3.5 Concrete	6.63	1108	50	3,673
Wood Frame	22.73	460	48	5,019
Wood Frame	35.33	64	48	1,085
Total Estimated Land Improvements True Cash Value =				9,777

The Equalizer. Copyright (c) 1999 - 2009. Licensed To: Township of Greenwood, County of Wexford, Michigan

Year	Land Value	Building Value	Assessed Value	Board of Review	Tribunal/ Other	Taxable Value
2024	22,800	102,900	125,700			102,375C
2023	12,900	84,600	97,500			97,500S
2022	11,900	71,700	83,600			73,297C
2021	12,000	74,400	86,400			70,956C

*** Information herein deemed reliable but not guaranteed***

Building Type

X	Single Family
	Mobile Home
	Town Home
	Duplex
	A-Frame
X	Wood Frame

Building Style: PLAIN

Yr Built	Remodeled
0	1998

Condition: Good

Room List

	Basement
	1st Floor
	2nd Floor
	Bedrooms

(1) Exterior

X	Wood/Shingle
	Aluminum/Vinyl
	Brick
X	Insulation

(2) Windows

	Many		Large
X	Avg.	X	Avg.
	Few		Small

X	Wood Sash
	Metal Sash
	Vinyl Sash
	Double Hung
	Horiz. Slide
	Casement
	Double Glass
	Patio Doors
X	Storms & Screens

(3) Roof

X	Gable		Gambrel
	Hip		Mansard
	Flat		Shed

X	Asphalt Shingle

Chimney:

(3) Roof (cont.)

	Eavestrough
X	Insulation
0	Front Overhang
0	Other Overhang

(4) Interior

X	Drywall		Plaster
	Paneled		Wood T&G

Trim & Decoration

	Ex	X	Ord		Min

Size of Closets

	Lg	X	Ord		Small

Doors:		Solid	X	H.C.	

(5) Floors

Kitchen:
Other: Linoleum
Other: Carpeted

(6) Ceilings

X	Drywall

(7) Excavation

Basement: 936 S.F.
Crawl: 0 S.F.
Slab: 0 S.F.
Height to Joists: 0.0

(8) Basement

	Conc. Block
	Poured Conc.
	Stone
	Treated Wood
	Concrete Floor

(9) Basement Finish

	Recreation SF
	Living SF
	Walkout Doors (B)
	No Floor SF
	Walkout Doors (A)

(10) Floor Support

Joists:
Unsupported Len:
Cntr.Sup:

(11) Heating/Cooling

X	Gas		Oil		Elec.
	Wood		Coal		Steam

	Forced Air w/o Ducts
X	Forced Air w/ Ducts
	Forced Hot Water
	Electric Baseboard
	Elec. Ceil. Radiant
	Radiant (in-floor)
	Electric Wall Heat
	Space Heater
	Wall/Floor Furnace
	Forced Heat & Cool
	Heat Pump
	No Heating/Cooling
	Central Air
	Wood Furnace

(12) Electric

150	Amps Service

No./Qual. of Fixtures

	Ex.	X	Ord.		Min

No. of Elec. Outlets

	Many	X	Ave.		Few

(13) Plumbing

1	Average Fixture(s)
	3 Fixture Bath
	2 Fixture Bath
	Softener, Auto
	Softener, Manual
	Solar Water Heat
	No Plumbing
	Extra Toilet
	Extra Sink
	Separate Shower
	Ceramic Tile Floor
	Ceramic Tile Wains
	Ceramic Tub Alcove
	Vent Fan

(14) Water/Sewer

	Public Water
	Public Sewer
1	Water Well
1	1000 Gal Septic
	2000 Gal Septic

Lump Sum Items:

(15) Built-ins

	Appliance Allow.
	Cook Top
	Dishwasher
	Garbage Disposal
	Bath Heater
	Vent Fan
	Hot Tub
	Unvented Hood
	Vented Hood
	Intercom
	Jacuzzi Tub
	Jacuzzi repl.Tub
	Oven
	Microwave
	Standard Range
	Self Clean Range
	Sauna
	Trash Compactor
	Central Vacuum
	Security System

(15) Fireplaces

	Interior 1 Story
	Interior 2 Story
	2nd/Same Stack
	Two Sided
	Exterior 1 Story
	Exterior 2 Story
	Prefab 1 Story
	Prefab 2 Story
	Heat Circulator
	Raised Hearth
	Wood Stove
	Direct-Vented Gas

Class: CD
Effec. Age: 25
Floor Area: 1,040
Total Base New : 201,521 E.C.F.
Total Depr Cost: 151,139 X 1.297
Estimated T.C.V: 196,027

(16) Porches/Decks

Area	Type
500	WPP
80	Brzwy, FW

(17) Garage

Year Built:
Car Capacity:
Class: CD
Exterior: Siding
Brick Ven.: 0
Stone Ven.: 0
Common Wall: Detache
Foundation: 42 Inch
Finished ?:
Auto. Doors: 0
Mech. Doors: 0
Area: 576
% Good: 0
Storage Area: 0
No Conc. Floor: 0

Bsmnt Garage:

Carport Area:
Roof:

Cost Est. for Res. Bldg: 1 Single Family PLAIN Cls CD Blt 0
(11) Heating System: Forced Air w/ Ducts
Ground Area = 936 SF Floor Area = 1040 SF.
Phy/Ab.Phy/Func/Econ/Comb. % Good=75/100/100/100/75
Building Areas

Stories	Exterior	Foundation	Size	Cost New	Depr. Cost
1+ Story	Siding	Basement	520		
1.25 Story	Siding	Basement	416		
			Total:	138,660	103,994
Other Additions/Adjustments					
Water/Sewer					
1000 Gal Septic			1	4,582	3,436
Water Well, 100 Feet			1	5,680	4,260
Porches					
WPP			500	7,445	5,584
Garages					
Class: CD Exterior: Siding Foundation: 42 Inch (Unfinished)					
Base Cost			576	22,401	16,801
Class: CD Exterior: Pole (Unfinished)					
Base Cost			740	17,923	13,442
Breezeways					
Frame Wall			80	4,830	3,622
			Totals:	201,521	151,139

Notes:
ECF (RESIDENTIAL) 1.297 => TCV: 196,027

*** Information herein deemed reliable but not guaranteed***

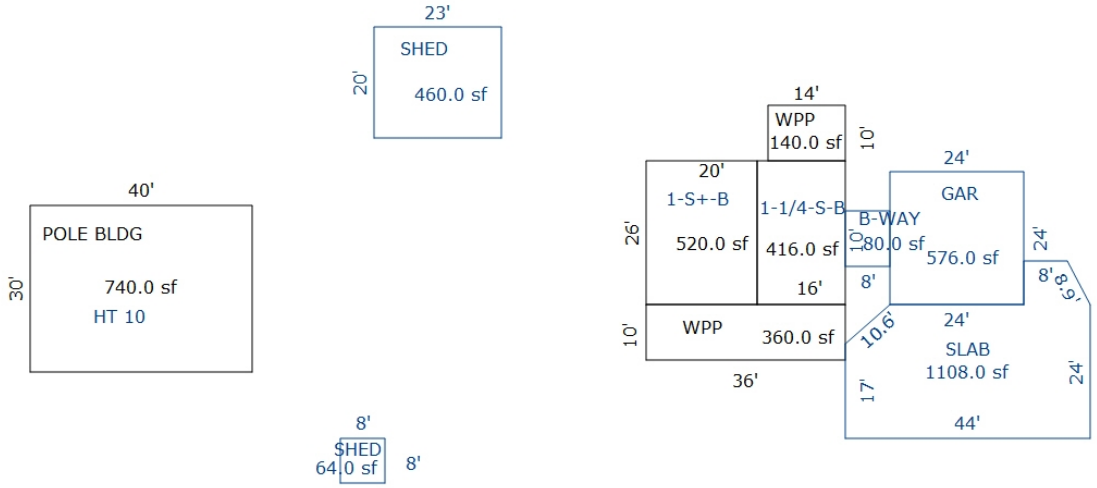

Sketch by Apex Sketch

*** Information herein deemed reliable but not guaranteed***

Parcel Number: 2410-06-4101 Jurisdiction: GREENWOOD TWP County: WEXFORD Printed on 02/15/2024

Grantor	Grantee	Sale Price	Sale Date	Inst. Type	Terms of Sale	Liber & Page	Verified By	Prcnt. Trans.
JACKSON, MARK A.	JACKSON, MARK A TRUST	0	01/11/2006	WD	09-FAMILY	582/2527	DEED	0.0

Property Address

Owner's Name/Address

JACKSON, MARK A
TRUST
4020 WATERVIEW DR
GRAWN MI 49637

Tax Description

NE 1/4 OF SE 1/4 40 A. GW. SEC. 6 T24N R10W -KINGSLEY-

Comments/Influences

Class: RESIDENTIAL-VACANT Zoning:

School: KINGSLEY AREA SCHOOL

P.R.E. 100% 12/08/2008 Qual. Fr. PA 42

:

2024 Est TCV 108,880

Building Permit(s)	Date	Number	Status

	Improved	X	Vacant

	Public Improvements
X	Dirt Road
	Gravel Road
	Paved Road
	Storm Sewer
	Sidewalk
	Water
	Sewer
X	Electric
	Gas
	Curb
	Street Lights
	Standard Utilities
	Underground Utils.

	Topography of Site
X	Level
X	Rolling
X	Low
	High
	Landscaped
X	Swamp
X	Wooded
	Pond
	Waterfront
	Ravine
	Wetland
	Flood Plain
X	OPEN/PINES

Who	When	What
GLA	10/31/2022	INSPECTION
LM	07/22/2009	DATA ENTER
LM	07/13/2009	INSPECTED

Land Value Estimates for Land Table 4010.LAND VALUES

Description	Frontage	Depth	* Factors * Front	Depth	Rate	%Adj.	Reason	Value
ACREAGE			40.000 Acres		2,722	100		108,880
			40.00 Total Acres		Total Est. Land Value =			108,880

Year	Land Value	Building Value	Assessed Value	Board of Review	Tribunal/ Other	Taxable Value
2024	54,400	0	54,400			24,970C
2023	48,000	0	48,000			23,781C
2022	38,000	0	38,000			22,649C
2021	34,000	0	34,000			21,926C

The Equalizer. Copyright (c) 1999 - 2009.
Licensed To: Township of Greenwood, County of Wexford, Michigan

*** Information herein deemed reliable but not guaranteed***

Parcel Number: 2410-06-4201 Jurisdiction: GREENWOOD TWP County: WEXFORD Printed on 02/15/2024

Grantor	Grantee	Sale Price	Sale Date	Inst. Type	Terms of Sale	Liber & Page	Verified By	Prcnt. Trans.
SALCICCIOLI, GINO G TRUST	SALCICCIOLI, GINO G TRUST	0	12/07/2022	QC	20-MULTI PARCEL SALE REF	694/1768	DEED	0.0
WEYHING, BURT T III	SALCICCIOLI, GINO G TRUST	159,500	01/28/2020	WD	19-MULTI PARCEL ARM'S LEN	690/201	AGENT	60.0
WARNER, WILLIAM J.	SALCICCIOLI GINO G TRUST &	0	12/08/2015	WD	21-NOT USED/OTHER	676/2106	DEED	0.0
SALCICCIOLI, GINO G	SALCICCIOLI, GINO G TRUST	0	12/01/2015	WD	21-NOT USED/OTHER	676/1827	DEED	20.0

Property Address

641 E 4 RD

Owner's Name/Address

SALCICCIOLI, GINO G TRUST
694/1768
3592 WALBRI
BLOOMFIELD HILLS MI 48304

Tax Description

NW 1/4 OF SE 1/4 & S 1/2 OF SE 1/4 120 A. GW. SEC. 6 T24N R10W -KINGSLEY-

Comments/Influences

Class: RESIDENTIAL-IMPROV Zoning:

School: KINGSLEY AREA SCHOOL

P.R.E. 0%

:

2024 Est TCV 385,596 TCV/TFA: 400.41

Building Permit(s)	Date	Number	Status

X	Improved		Vacant

	Public Improvements
	Dirt Road
	Gravel Road
X	Paved Road
	Storm Sewer
	Sidewalk
	Water
	Sewer
X	Electric
	Gas
	Curb
	Street Lights
	Standard Utilities
	Underground Utils.

	Topography of Site
X	Level
X	Rolling
	Low
	High
	Landscaped
	Swamp
X	Wooded
	Pond
	Waterfront
	Ravine
	Wetland
	Flood Plain
X	OPEN/PINES

Who	When	What
GLA	05/08/2016	INSPECTION

Land Value Estimates for Land Table 4010.LAND VALUES

Description	Frontage	Depth	* Factors * Front	Depth	Rate	%Adj.	Reason	Value
ACREAGE			118.620 Acres		2,480	100		294,178
ROW			1.380 Acres		0	100		0
			120.00 Total Acres		Total Est. Land Value =			294,178

Land Improvement Cost Estimates

Description	Rate	Size	% Good	Cash Value
D/W/P: 4in Concrete	6.15	552	45	1,528
Wood Frame	29.45	55	44	713
Total Estimated Land Improvements True Cash Value =				2,241

Year	Land Value	Building Value	Assessed Value	Board of Review	Tribunal/ Other	Taxable Value
2024	147,100	45,700	192,800			80,276C
2023	112,700	37,300	150,000			76,454C
2022	100,800	32,000	132,800			72,814C
2021	89,000	32,700	121,700			70,488C

The Equalizer. Copyright (c) 1999 - 2009. Licensed To: Township of Greenwood, County of Wexford, Michigan

*** Information herein deemed reliable but not guaranteed***

Building Type

X	Single Family
	Mobile Home
	Town Home
	Duplex
	A-Frame
X	Wood Frame

Building Style: PLAIN

Yr Built	Remodeled
0	0

Condition: Good

Room List

	Basement
	1st Floor
	2nd Floor
	Bedrooms

(1) Exterior

	Wood/Shingle
X	Aluminum/Vinyl
	Brick
X	Insulation

(2) Windows

	Many		Large
X	Avg.	X	Avg.
	Few		Small

	Wood Sash
	Metal Sash
X	Vinyl Sash
	Double Hung
	Horiz. Slide
	Casement
	Double Glass
	Patio Doors
X	Storms & Screens

(3) Roof

X	Gable		Gambrel
	Hip		Mansard
	Flat		Shed

X	Asphalt Shingle

Chimney:

(3) Roof (cont.)

	Eavestrough
X	Insulation
0	Front Overhang
0	Other Overhang

(4) Interior

X	Drywall		Plaster
	Paneled		Wood T&G

Trim & Decoration

	Ex	X	Ord		Min

Size of Closets

	Lg	X	Ord		Small

Doors:		Solid	X	H.C.	

(5) Floors

Kitchen:
Other: Linoleum
Other: Carpeted

(6) Ceilings

X	Drywall

(7) Excavation

Basement: 0 S.F.
Crawl: 0 S.F.
Slab: 963 S.F.
Height to Joists: 0.0

(8) Basement

	Conc. Block
	Poured Conc.
	Stone
	Treated Wood
	Concrete Floor

(9) Basement Finish

	Recreation SF
	Living SF
	Walkout Doors (B)
	No Floor SF
	Walkout Doors (A)

(10) Floor Support

Joists:
Unsupported Len:
Cntr.Sup:

(11) Heating/Cooling

X	Gas		Oil		Elec.
	Wood		Coal		Steam

	Forced Air w/o Ducts
X	Forced Air w/ Ducts
	Forced Hot Water
	Electric Baseboard
	Elec. Ceil. Radiant
	Radiant (in-floor)
	Electric Wall Heat
	Space Heater
	Wall/Floor Furnace
	Forced Heat & Cool
	Heat Pump
	No Heating/Cooling

	Central Air
	Wood Furnace

(12) Electric

150	Amps Service

No./Qual. of Fixtures

	Ex.	X	Ord.		Min

No. of Elec. Outlets

	Many	X	Ave.		Few

(13) Plumbing

	Average Fixture(s)
1	3 Fixture Bath
	2 Fixture Bath
	Softener, Auto
	Softener, Manual
	Solar Water Heat
	No Plumbing
	Extra Toilet
	Extra Sink
	Separate Shower
	Ceramic Tile Floor
	Ceramic Tile Wains
	Ceramic Tub Alcove
	Vent Fan

(14) Water/Sewer

	Public Water
	Public Sewer
1	Water Well
1	1000 Gal Septic
	2000 Gal Septic

Lump Sum Items:

(15) Built-ins

	Appliance Allow.
	Cook Top
	Dishwasher
	Garbage Disposal
	Bath Heater
	Vent Fan
	Hot Tub
	Unvented Hood
	Vented Hood
	Intercom
	Jacuzzi Tub
	Jacuzzi repl.Tub
	Oven
	Microwave
	Standard Range
	Self Clean Range
	Sauna
	Trash Compactor
	Central Vacuum
	Security System

(15) Fireplaces

	Interior 1 Story
	Interior 2 Story
	2nd/Same Stack
	Two Sided
1	Exterior 1 Story
	Exterior 2 Story
	Prefab 1 Story
	Prefab 2 Story
	Heat Circulator
	Raised Hearth
	Wood Stove
	Direct-Vented Gas

Class: D
Effec. Age: 46
Floor Area: 963
Total Base New : 127,326 E.C.F.
Total Depr Cost: 68,756 X 1.297
Estimated T.C.V: 89,177

(16) Porches/Decks

Area	Type

(17) Garage

Year Built:
Car Capacity:
Class: D
Exterior: Block
Brick Ven.: 0
Stone Ven.: 0
Common Wall: Detache
Foundation: 42 Inch
Finished ?:
Auto. Doors: 0
Mech. Doors: 0
Area: 182
% Good: 0
Storage Area: 0
No Conc. Floor: 0

Bsmnt Garage:

Carport Area:
Roof:

Cost Est. for Res. Bldg: 1 Single Family PLAIN Cls D Blt 0
(11) Heating System: Forced Air w/ Ducts
Ground Area = 963 SF Floor Area = 963 SF.
Phy/Ab.Phy/Func/Econ/Comb. % Good=54/100/100/100/54
Building Areas

Stories	Exterior	Foundation	Size	Cost New	Depr. Cost
1 Story	Block	Slab	963		
			Total:	102,848	55,538
Other Additions/Adjustments					
Water/Sewer					
1000 Gal Septic			1	4,200	2,268
Water Well, 100 Feet			1	5,584	3,015
Fireplaces					
Exterior 1 Story			1	5,039	2,721
Garages					
Class: D Exterior: Block Foundation: 42 Inch (Unfinished)					
Base Cost			182	9,655	5,214
			Totals:	127,326	68,756

Notes:
ECF (RESIDENTIAL) 1.297 => TCV: 89,177

*** Information herein deemed reliable but not guaranteed***

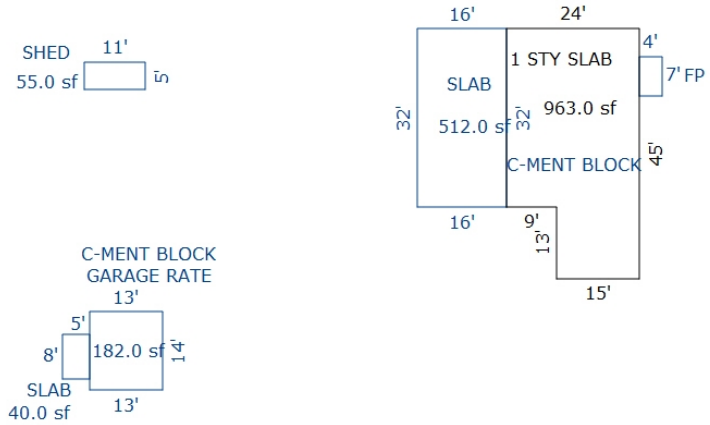

Sketch by Apex Sketch

*** Information herein deemed reliable but not guaranteed***

Parcel Number: 2410-07-1101 Jurisdiction: GREENWOOD TWP County: WEXFORD Printed on 02/15/2024

Grantor	Grantee	Sale Price	Sale Date	Inst. Type	Terms of Sale	Liber & Page	Verified By	Prcnt. Trans.
SALCICCIOLI, GINO G TRUST	SALCICCIOLI, GINO G TRUST	0	12/07/2022	QC	20-MULTI PARCEL SALE REF	694/1768	DEED	0.0
WEYHING, BURT T III	SALCICCIOLI, GINO G TRUST	159,500	01/28/2020	WD	20-MULTI PARCEL SALE REF	690/201	AGENT	40.0
WARNER, WILLIAM J.	SALCICCIOLI GINO G TRUST &	0	12/08/2015	WD	21-NOT USED/OTHER	676/2106	DEED	20.0
SALCICCIOLI, GINO G	SALCICCIOLI, GINO G TRUST	0	08/31/2015	WD	21-NOT USED/OTHER	676/1827	DEED	20.0

Property Address

Owner's Name/Address

SALCICCIOLI, GINO G TRUST
694/1768
3592 WALBRI
BLOOMFIELD HILLS MI 48304

Tax Description

N 1/2 OF NE 1/4 EXC S 5 CHS OF W 2 CHS 79 A. GW. SEC. 7 T24N R10W -KINGSLEY-

Comments/Influences

The Equalizer. Copyright (c) 1999 - 2009. Licensed To: Township of Greenwood, County of Wexford, Michigan

Class: RESIDENTIAL-VACANT Zoning:

School: KINGSLEY AREA SCHOOL

P.R.E. 0%

:

2024 Est TCV 201,002

Building Permit(s)	Date	Number	Status

	Improved	X	Vacant

	Public Improvements
X	Dirt Road
	Gravel Road
	Paved Road
	Storm Sewer
	Sidewalk
	Water
	Sewer
X	Electric
	Gas
	Curb
	Street Lights
	Standard Utilities
	Underground Utils.

	Topography of Site
	Level
X	Rolling
	Low
	High
	Landscaped
	Swamp
X	Wooded
	Pond
	Waterfront
	Ravine
	Wetland
	Flood Plain
X	PINES

Who	When	What
GLA	10/31/2022	INSPECTION
LM	10/28/2011	APPR INSPE
GLA	05/08/2016	INSPECTION

Land Value Estimates for Land Table 4010.LAND VALUES

Description	Frontage	Depth	* Factors * Front	Depth	Rate	%Adj.	Reason	Value
ACREAGE			79.000 Acres		2,544	100		201,002
			79.00 Total Acres		Total Est. Land Value =			201,002

Year	Land Value	Building Value	Assessed Value	Board of Review	Tribunal/ Other	Taxable Value
2024	100,500	0	100,500			33,107C
2023	85,100	0	85,100			31,531C
2022	67,200	0	67,200			30,030C
2021	61,400	0	61,400			29,071C

*** Information herein deemed reliable but not guaranteed***

Parcel Number: 2410-07-2101 Jurisdiction: GREENWOOD TWP County: WEXFORD Printed on 02/15/2024

Grantor	Grantee	Sale Price	Sale Date	Inst. Type	Terms of Sale	Liber & Page	Verified By	Prcnt. Trans.

Property Address	Class: AGRICULTURAL-VACAN	Zoning:	Building Permit(s)	Date	Number	Status
	School: KINGSLEY AREA SCHOOL					
Owner's Name/Address	P.R.E. 0%					
STATE OF MICHIGAN P O BOX 30735 GRANTS ADMINISTRATION LANSING MI 48909-8235	:					
	2024 Est TCV 0					

Improved | X | Vacant

Public Improvements

Dirt Road
Gravel Road
Paved Road
Storm Sewer
Sidewalk
Water
Sewer
Electric
Gas
Curb
Street Lights
Standard Utilities
Underground Utils.

Topography of Site

Level
Rolling
Low
High
Landscaped
Swamp
Wooded
Pond
Waterfront
Ravine
Wetland
Flood Plain

Land Value Estimates for Land Table 4010.LAND VALUES

Description	Frontage	Depth	* Factors * Front	Depth	Rate	%Adj.	Reason	Value
ACREAGE			421.130 Acres		2,480	100		1,044,402
			421.13 Total Acres		Total Est. Land Value =			1,044,402

Tax Description

ENTIRE FRL SEC. 7 EXC PAR COM AT NE COR OF SEC: S 1320 FT; W 2508 FT; N 330 FT; W 132 FT; N 990 FT; E TO POB. & EXC S 1/2 OF SE 1/4 421.13 A M/L-- GW. SEC. 7 T24N R10W -KINGSLEY-

Comments/Influences

Year	Land Value	Building Value	Assessed Value	Board of Review	Tribunal/ Other	Taxable Value
2024	EXEMPT	EXEMPT	EXEMPT			EXEMPT
2023	EXEMPT	EXEMPT	EXEMPT			EXEMPT
2022	0	0	0			0
2021	0	0	0			0

Who	When	What
GLA	09/05/2016	INSPECTION

The Equalizer. Copyright (c) 1999 - 2009.
Licensed To: Township of Greenwood, County of Wexford, Michigan

*** Information herein deemed reliable but not guaranteed***

Parcel Number: 2410-07-4301 Jurisdiction: GREENWOOD TWP County: WEXFORD Printed on 02/15/2024

Grantor	Grantee	Sale Price	Sale Date	Inst. Type	Terms of Sale	Liber & Page	Verified By	Prcnt. Trans.

Property Address	Class: AGRICULTURAL-VACAN	Zoning:	Building Permit(s)	Date	Number	Status
	School: KINGSLEY AREA SCHOOL					
Owner's Name/Address	P.R.E. 100% / /					
MICHIGAN DEPT OF P O BOX 30735 GRANTS ADMINISTRATION LANSING MI 48909-8235	:					
	2024 Est TCV 203,240					

Tax Description

S 1/2 OF SE 1/4 80 A. GW. SEC. 7 T24N R10W -KINGSLEY- SEE ACT 513 ROLL FOR VALUE

Comments/Influences

The Equalizer. Copyright (c) 1999 - 2009. Licensed To: Township of Greenwood, County of Wexford, Michigan

	Improved	X Vacant

Public Improvements

- Dirt Road
- Gravel Road
- Paved Road
- Storm Sewer
- Sidewalk
- Water
- Sewer
- Electric
- Gas
- Curb
- Street Lights
- Standard Utilities
- Underground Utils.

Topography of Site

- Level
- Rolling
- Low
- High
- Landscaped
- Swamp
- Wooded
- Pond
- Waterfront
- Ravine
- Wetland
- Flood Plain

Who	When	What
GLA	05/08/2016	INSPECTION

Land Value Estimates for Land Table 4010.LAND VALUES

Description	Frontage	Depth	* Factors * Front	Depth	Rate	%Adj.	Reason	Value
ACREAGE			80.000 Acres		2,541	100		203,240
			80.00 Total Acres		Total Est. Land Value =			203,240

Year	Land Value	Building Value	Assessed Value	Board of Review	Tribunal/ Other	Taxable Value
2024	101,600	0	101,600			48,060C
2023	85,600	0	85,600			45,772C
2022	68,000	0	68,000			43,593C
2021	62,000	0	62,000			42,201C

*** Information herein deemed reliable but not guaranteed***

Parcel Number: 2410-08-1101 Jurisdiction: GREENWOOD TWP County: WEXFORD Printed on 02/15/2024

Grantor	Grantee	Sale Price	Sale Date	Inst. Type	Terms of Sale	Liber & Page	Verified By	Prcnt. Trans.
MICHIGAN DEPT. OF	HANSER, JOHN & CARRIE	1,100	10/23/2000	OTH	14-INTO/OUT OF TRUST	377:519	DEED	0.0

Property Address

Owner's Name/Address

MICHIGAN DEPT OF
P O BOX 30735
GRANTS ADMINISTRATION
LANSING MI 48909-8235

Tax Description

NE 1/4 EXC N 33 FT OF W 624 FT; S 1/2 OF SW 1/4; SE 1/4 W OF RIVER SUB TO EASMT L377 P519 '00 --376.74 A M/L-- GW. SEC. 8 T24N R10W -KINGSLEY- SEE ACT 513 ROLL FOR VALUE

Comments/Influences

The Equalizer. Copyright (c) 1999 - 2009. Licensed To: Township of Greenwood, County of Wexford, Michigan

Class: AGRICULTURAL-VACAN Zoning:

School: KINGSLEY AREA SCHOOL

P.R.E. 100% / /

:

2024 Est TCV 934,315

Building Permit(s)	Date	Number	Status

Improved | X | Vacant

Public Improvements

Dirt Road
Gravel Road
Paved Road
Storm Sewer
Sidewalk
Water
Sewer
Electric
Gas
Curb
Street Lights
Standard Utilities
Underground Utils.

Topography of Site

Level
Rolling
Low
High
Landscaped
Swamp
Wooded
Pond
Waterfront
Ravine
Wetland
Flood Plain

Who When What

GLA 05/08/2016 INSPECTION

Land Value Estimates for Land Table 4010.LAND VALUES

Description	Frontage	Depth	* Factors * Front	Depth	Rate	%Adj.	Reason	Value
ACREAGE			376.740 Acres		2,480	100		934,315
			376.74 Total Acres		Total Est. Land Value =			934,315

Year	Land Value	Building Value	Assessed Value	Board of Review	Tribunal/ Other	Taxable Value
2024	467,200	0	467,200			161,247C
2023	357,900	0	357,900			153,569C
2022	320,200	0	320,200			146,257C
2021	282,600	0	282,600			141,585C

*** Information herein deemed reliable but not guaranteed***

Parcel Number: 2410-08-2101 Jurisdiction: GREENWOOD TWP County: WEXFORD Printed on 02/15/2024

Grantor	Grantee	Sale Price	Sale Date	Inst. Type	Terms of Sale	Liber & Page	Verified By	Prcnt. Trans.
MUNDY, ELIZABETH M	MUNDY, ELIZABETH SAGE TRUS	0	04/08/2013	QC	14-INTO/OUT OF TRUST	658/2350	DEED	0.0

Property Address

Class: RESIDENTIAL-VACANT Zoning:

School: KINGSLEY AREA SCHOOL

P.R.E. 0%

:

2024 Est TCV 110,241

Building Permit(s)	Date	Number	Status

Owner's Name/Address

MUNDY, ELIZABETH SAGE TRUST
2140 W CHURCHILL ROW
CHICAGO IL 60647

	Improved	X	Vacant

Land Value Estimates for Land Table 4010.LAND VALUES

Description	Frontage	Depth	* Factors * Front	Depth	Rate	%Adj.	Reason	Value
ACREAGE			40.500	Acres	2,722	100		110,241
			40.50	Total Acres		Total Est. Land Value =		110,241

Tax Description

NE 1/4 OF NW 1/4 & N 33.07 FT OF W 624.86 FT OF W 1/2 OF NE 1/4 40.5 A. M/L GW. SEC. 8 T24N R10W -KINGSLEY-

Comments/Influences

	Public Improvements
X	Dirt Road
	Gravel Road
	Paved Road
	Storm Sewer
	Sidewalk
	Water
	Sewer
	Electric
	Gas
	Curb
	Street Lights
	Standard Utilities
	Underground Utils.

	Topography of Site
	Level
X	Rolling
	Low
	High
	Landscaped
	Swamp
X	Wooded
	Pond
	Waterfront
	Ravine
	Wetland
	Flood Plain
X	PINES/OPEN

Who	When	What
GLA	05/08/2016	INSPECTION

Year	Land Value	Building Value	Assessed Value	Board of Review	Tribunal/ Other	Taxable Value
2024	55,100	0	55,100			12,333C
2023	49,200	0	49,200			11,746C
2022	38,200	0	38,200			11,187C
2021	34,400	0	34,400			10,830C

The Equalizer. Copyright (c) 1999 - 2009. Licensed To: Township of Greenwood, County of Wexford, Michigan

*** Information herein deemed reliable but not guaranteed***

Parcel Number: 2410-08-2201 Jurisdiction: GREENWOOD TWP County: WEXFORD Printed on 02/15/2024

Grantor	Grantee	Sale Price	Sale Date	Inst. Type	Terms of Sale	Liber & Page	Verified By	Prcnt. Trans.

Property Address	Class: AGRICULTURAL-VACAN	Zoning:	Building Permit(s)	Date	Number	Status
	School: KINGSLEY AREA SCHOOL					
Owner's Name/Address	P.R.E. 0%					
STATE OF MICHIGAN P O BOX 30735 GRANTS ADMINISTRATION LANSING MI 48909-8235	:					
	2024 Est TCV 0					

Tax Description

W 1/2 OF NW 1/4 EXC N 5 CHS OF W 2 CHS & NW 1/4 OF SW 1/4 119 A. GW. SEC. 8 T24N R10W -KINGSLEY-

Comments/Influences

The Equalizer. Copyright (c) 1999 - 2009. Licensed To: Township of Greenwood, County of Wexford, Michigan

	Improved	X	Vacant

Public Improvements

- Dirt Road
- Gravel Road
- Paved Road
- Storm Sewer
- Sidewalk
- Water
- Sewer
- Electric
- Gas
- Curb
- Street Lights
- Standard Utilities
- Underground Utils.

Topography of Site

- Level
- Rolling
- Low
- High
- Landscaped
- Swamp
- Wooded
- Pond
- Waterfront
- Ravine
- Wetland
- Flood Plain

Who	When	What
GLA	05/08/2016	INSPECTION

Land Value Estimates for Land Table 4010.LAND VALUES

Description	Frontage	Depth	* Factors * Front	Depth	Rate	%Adj.	Reason	Value
ACREAGE			119.000 Acres		2,480	100		295,120
			119.00 Total Acres		Total Est. Land Value =			295,120

Year	Land Value	Building Value	Assessed Value	Board of Review	Tribunal/ Other	Taxable Value
2024	EXEMPT	EXEMPT	EXEMPT			EXEMPT
2023	EXEMPT	EXEMPT	EXEMPT			EXEMPT
2022	0	0	0			0
2021	0	0	0			0

*** Information herein deemed reliable but not guaranteed***

Parcel Number: 2410-08-2202 Jurisdiction: GREENWOOD TWP County: WEXFORD Printed on 02/15/2024

Grantor	Grantee	Sale Price	Sale Date	Inst. Type	Terms of Sale	Liber & Page	Verified By	Prcnt. Trans.
SALCICCIOLI, GINO G TRUST	SALCICCIOLI, GINO G TRUST	0	12/07/2022	QC	20-MULTI PARCEL SALE REF	694/1768	DEED	0.0
WEYHING, BURT T III	SALCICCIOLI, GINO G TRUST	159,500	01/28/2020	WD	20-MULTI PARCEL SALE REF	690/201	AGENT	60.0
WARNER, WILLIAM J.	SALCICCIOLI GINO G TRUST &	0	12/08/2015	WD	21-NOT USED/OTHER	676/2106	DEED	20.0
SALCICCIOLI, GINO G	SALCICCIOLI, GINO G TRUST	0	08/31/2015	WD	21-NOT USED/OTHER	676/1827	DEED	20.0

Property Address

Owner's Name/Address

SALCICCIOLI, GINO G TRUST
694/1768
3592 WALBRI
BLOOMFIELD HILLS MI 48304

Tax Description

A PAR COM IN NW COR; E 2 CHAINS; S 5 CHAINS; W 2 CHAINS; N 5 CHAINS IN W 1/2 OF NW 1/4 --1 A.-- GW. SEC. 8 T24N R10W -KINGSLEY-

Comments/Influences

The Equalizer. Copyright (c) 1999 - 2009. Licensed To: Township of Greenwood, County of Wexford, Michigan

Class: RESIDENTIAL-VACANT Zoning:

School: KINGSLEY AREA SCHOOL

P.R.E. 0%

:

2024 Est TCV 10,953

	Improved	X	Vacant

	Public Improvements
X	Dirt Road
	Gravel Road
	Paved Road
	Storm Sewer
	Sidewalk
	Water
	Sewer
	Electric
	Gas
	Curb
	Street Lights
	Standard Utilities
	Underground Utils.

	Topography of Site
	Level
X	Rolling
	Low
	High
	Landscaped
	Swamp
X	Wooded
	Pond
	Waterfront
	Ravine
	Wetland
	Flood Plain

Who	When	What
GLA	05/08/2016	INSPECTION

Building Permit(s)	Date	Number	Status

Land Value Estimates for Land Table 4010.LAND VALUES

Description	Frontage	Depth	* Factors * Front	Depth	Rate	%Adj.	Reason	Value
ACREAGE			1.000	Acres	10,953	100		10,953
			1.00	Total Acres		Total Est. Land Value =		10,953

Year	Land Value	Building Value	Assessed Value	Board of Review	Tribunal/ Other	Taxable Value
2024	5,500	0	5,500			2,001C
2023	3,000	0	3,000			1,906C
2022	2,500	0	2,500			1,816C
2021	3,000	0	3,000			1,758C

*** Information herein deemed reliable but not guaranteed***

Parcel Number: 2410-08-2401 Jurisdiction: GREENWOOD TWP County: WEXFORD Printed on 02/15/2024

Grantor	Grantee	Sale Price	Sale Date	Inst. Type	Terms of Sale	Liber & Page	Verified By	Prcnt. Trans.
HANSER, JOHN & CARRIE	DNR	220,000	04/17/2006	WD	03-ARM'S LENGTH	586/536	DEED	0.0
HANSER, JOHN & CARRIE	DNR	220,000	04/12/2006	WD	03-ARM'S LENGTH	586:536	DEED	0.0
MOBLEY, GARY C.	HANSER, JOHN & CARRIE	65,000	09/20/1996	WD	03-ARM'S LENGTH	351:550	DEED	0.0

Property Address

Class: AGRICULTURAL-VACAN Zoning:

School: KINGSLEY AREA SCHOOL

P.R.E. 100% 05/25/2007 Qual. Ag.

:

2024 Est TCV 215,200

Building Permit(s)	Date	Number	Status

Owner's Name/Address

MICHIGAN DEPT OF
P O BOX 30735
GRANTS ADMINISTRATION
LANSING MI 48909-8235

	Improved	X	Vacant

	Public Improvements
X	Dirt Road
	Gravel Road
	Paved Road
	Storm Sewer
	Sidewalk
	Water
	Sewer
	Electric
	Gas
	Curb
	Street Lights
	Standard Utilities
	Underground Utils.

	Topography of Site
	Level
X	Rolling
	Low
	High
	Landscaped
	Swamp
X	Wooded
	Pond
	Waterfront
	Ravine
	Wetland
	Flood Plain

Land Value Estimates for Land Table 1010.AG

Description	Frontage	Depth	* Factors * Front	Depth	Rate	%Adj.	Reason	Value
AG LAND	80 ACRES		80.00 Acres		2690	100		215,200
			80.00 Total Acres		Total Est. Land Value =			215,200

Tax Description

SE 1/4 OF NW 1/4 & NE 1/4 OF SW 1/4 80 A TOG W/EASMT L377 P519 '00 GW. SEC. 8 T24N R10W -KINGSLEY- SEE ACT 513 ROLL FOR VALUE

Comments/Influences

Who	When	What
GLA	05/08/2016	INSPECTION

Year	Land Value	Building Value	Assessed Value	Board of Review	Tribunal/ Other	Taxable Value
2024	107,600	0	107,600			137,347C
2023	80,000	0	80,000			130,807S
2022	72,000	0	72,000			124,579S
2021	68,000	0	68,000			120,600S

The Equalizer. Copyright (c) 1999 - 2009.
Licensed To: Township of Greenwood, County of Wexford, Michigan

*** Information herein deemed reliable but not guaranteed***

Parcel Number: 2410-09-1101 Jurisdiction: GREENWOOD TWP County: WEXFORD Printed on 02/15/2024

Grantor	Grantee	Sale Price	Sale Date	Inst. Type	Terms of Sale	Liber & Page	Verified By	Prcnt. Trans.

Property Address	Class: AGRICULTURAL-VACAN	Zoning:	Building Permit(s)	Date	Number	Status
	School: MANTON CONSOLIDATED SCHOOLS					
Owner's Name/Address	P.R.E. 100% / /					
MICHIGAN DEPT OF P O BOX 30735 GRANTS ADMINISTRATION LANSING MI 48909-8235	:					
	2024 Est TCV 1,091,200					

Tax Description

N 1/2 OF NE 1/4; SW 1/4 OF NE 1/4; W 1/2 OF SECTION --440 A.-- GW. SEC. 9 T24N R10W - MANTON - SEE ACT 513 ROLL FOR VALUE

Comments/Influences

The Equalizer. Copyright (c) 1999 - 2009. Licensed To: Township of Greenwood, County of Wexford, Michigan

	Improved	X Vacant

Public Improvements

- Dirt Road
- Gravel Road
- Paved Road
- Storm Sewer
- Sidewalk
- Water
- Sewer
- Electric
- Gas
- Curb
- Street Lights
- Standard Utilities
- Underground Utils.

Topography of Site

- Level
- Rolling
- Low
- High
- Landscaped
- Swamp
- Wooded
- Pond
- Waterfront
- Ravine
- Wetland
- Flood Plain

Who	When	What
GLA	05/08/2016	INSPECTION

Land Value Estimates for Land Table 4010.LAND VALUES

Description	Frontage	Depth	* Factors * Front	Depth	Rate	%Adj.	Reason	Value
ACREAGE			440.000 Acres		2,480	100		1,091,200
			440.00 Total Acres		Total Est. Land Value =			1,091,200

Year	Land Value	Building Value	Assessed Value	Board of Review	Tribunal/ Other	Taxable Value
2024	545,600	0	545,600			286,821C
2023	418,000	0	418,000			273,163C
2022	374,000	0	374,000			260,156C
2021	330,000	0	330,000			251,846C

*** Information herein deemed reliable but not guaranteed***

Parcel Number: 2410-09-1401-02 Jurisdiction: GREENWOOD TWP County: WEXFORD Printed on 02/15/2024

Grantor	Grantee	Sale Price	Sale Date	Inst. Type	Terms of Sale	Liber & Page	Verified By	Prcnt. Trans.

Property Address	Class: RESIDENTIAL-IMPROV	Zoning:	Building Permit(s)	Date	Number	Status
2901 E 4 1/2 RD	School: MANTON CONSOLIDATED SCHOOLS		Manufactured home	11/02/2020	PB20-0210	
	P.R.E. 0%					
Owner's Name/Address	:					
MEINER, SCOTT WAYNE 2901 E 4 1/2 RD MANTON MI 49663	2024 Est TCV 67,955 TCV/TFA: 123.11					

X Improved | Vacant

Public Improvements
- Dirt Road
- Gravel Road
- Paved Road
- Storm Sewer
- Sidewalk
- Water
- Sewer
- Electric
- Gas
- Curb
- Street Lights
- Standard Utilities
- Underground Utils.

Topography of Site
- Level
- Rolling
- Low
- High
- Landscaped
- Swamp
- Wooded
- Pond
- Waterfront
- Ravine
- Wetland
- Flood Plain

Tax Description

PAR C; COM AT E 1/4 COR OF SEC; W 330.18 FT TO POB: W 330.1 FT; N 1318.94 FT; E 330.1 FT; S 1318.58 FT & PAR D; BEG AT E 1/4 COR OF SEC: W 330.18 FT; N 1318.58 FT; E 330.18 FT; S 1318.22 FT TO POB. TOG W/ & SUB TO EASMT 19.98 AC. GW. SEC. 9 T24N R10W -MANTON- [[ASSESSED W/ 09-1401 '04
CONBINED ON 01/14/2019 WITH 2410-09-1401, 2410-09-1402, 2410-09-1403 INTO 2410-09-1401-01;
9.99 A M/L. TOG W/ & SUB TO EASMT GW. SEC. 9 T24N R10W -MANTON-

Land Value Estimates for Land Table 4010.LAND VALUES

Description	Frontage	Depth	* Factors * Front	Depth	Rate	%Adj.	Reason	Value
ACREAGE			19.980 Acres		3,200	100		63,936
			19.98 Total Acres		Total Est. Land Value =			63,936

Land Improvement Cost Estimates

Description	Rate	Size	% Good	Cash Value
Wood Frame	25.79	80	10	206
Total Estimated Land Improvements True Cash Value =				206

Who	When	What
JB	10/23/2023	INSPECTION
GLA	10/31/2022	INSPECTION

Year	Land Value	Building Value	Assessed Value	Board of Review	Tribunal/ Other	Taxable Value
2024	32,000	2,000	34,000			23,921C
2023	26,000	1,600	27,600			22,782C
2022	22,000	74,600	96,600	23,000J		18,676C
2021	20,000	1,200	21,200			18,079C

The Equalizer. Copyright (c) 1999 - 2009.
Licensed To: Township of Greenwood, County of Wexford, Michigan

*** Information herein deemed reliable but not guaranteed***

Building Type

	Single Family
X	Mobile Home
	Town Home
	Duplex
	A-Frame
X	Wood Frame

Building Style: SWT/DWT

Yr Built	Remodeled
0	0

Condition: Very Poor

Room List

	Basement
	1st Floor
	2nd Floor
	Bedrooms

(1) Exterior

	Wood/Shingle
	Aluminum/Vinyl
	Brick
X	Aluminum
	Insulation

(2) Windows

X	Many		Large
	Avg.	X	Avg.
	Few		Small

X	Wood Sash
	Metal Sash
	Vinyl Sash
	Double Hung
	Horiz. Slide
	Casement
	Double Glass
	Patio Doors
X	Storms & Screens

(3) Roof

	Gable		Gambrel
	Hip		Mansard
X	Flat		Shed

X	Asphalt Shingle
	Metal

Chimney:

(3) Roof (cont.)

	Eavestrough
	Insulation
0	Front Overhang
0	Other Overhang

(4) Interior

	Drywall		Plaster
	Paneled		Wood T&G

Trim & Decoration

	Ex		Ord		Min

Size of Closets

	Lg		Ord		Small

Doors:		Solid		H.C.	

(5) Floors

Kitchen:
Other:
Other:

(6) Ceilings

(7) Excavation

Basement: 0 S.F.
Crawl: 0 S.F.
Slab: 0 S.F.
Height to Joists: 0.0

(8) Basement

	Conc. Block
	Poured Conc.
	Stone
	Treated Wood
	Concrete Floor

(9) Basement Finish

	Recreation	SF
	Living	SF
	Walkout Doors (B)	
	No Floor	SF
	Walkout Doors (A)	

(10) Floor Support

Joists:
Unsupported Len:
Cntr.Sup:

(11) Heating/Cooling

X	Gas		Oil		Elec.
	Wood		Coal		Steam

X	Forced Warm Air
	Wall Furnace
	Warm & Cool Air
	Heat Pump
	Central Air
	Wood Furnace

(12) Electric

0	Amps Service

No./Qual. of Fixtures

	Ex.		Ord.		Min

No. of Elec. Outlets

	Many		Ave.		Few

(13) Plumbing

1	Average Fixture(s)
	3 Fixture Bath
	2 Fixture Bath
	Softener, Auto
	Softener, Manual
	Solar Water Heat
	No Plumbing
	Extra Toilet
	Extra Sink
	Separate Shower
	Ceramic Tile Floor
	Ceramic Tile Wains
	Ceramic Tub Alcove
	Vent Fan

(14) Water/Sewer

	Public Water
	Public Sewer
1	Water Well
1	1000 Gal Septic
	2000 Gal Septic

Lump Sum Items:

(15) Built-ins

	Appliance Allow.
	Cook Top
	Dishwasher
	Garbage Disposal
	Bath Heater
	Vent Fan
	Hot Tub
	Unvented Hood
	Vented Hood
	Intercom
	Jacuzzi Tub
	Jacuzzi repl.Tub
	Oven
	Microwave
	Standard Range
	Self Clean Range
	Sauna
	Trash Compactor
	Central Vacuum
	Security System

(15) Fireplaces

	Interior 1 Story
	Interior 2 Story
	2nd/Same Stack
	Two Sided
	Exterior 1 Story
	Exterior 2 Story
	Prefab 1 Story
	Prefab 2 Story
	Heat Circulator
	Raised Hearth
	Wood Stove
	Direct-Vented Gas

Class: Low
Effec. Age: 25
Floor Area:
Total Base New : 45,500 E.C.F.
Total Depr Cost: 2,940 X 1.297
Estimated T.C.V: 3,813

(16) Porches/Decks

Area	Type
84	CGEP (1 Story)

(17) Garage

Year Built:
Car Capacity:
Class:
Exterior:
Brick Ven.:
Stone Ven.:
Common Wall:
Foundation:
Finished ?:
Auto. Doors:
Mech. Doors:
Area:
% Good:
Storage Area:
No Conc. Floor:

Bsmnt Garage:

Carport Area:
Roof:

Cost Est. for Res. Bldg: 1 Mobile Home SWT/DWT Cls Low Blt 0
(11) Heating System: Forced Warm Air
Ground Area = 552 SF Floor Area = 552 SF.
Phy/Ab.Phy/Func/Econ/Comb. % Good=35/100/20/100/7
Functional Depreciation because of: NOT LIVEABLE
Building Areas

Type	Ext. Walls	Roof/Fnd.	Size	Cost New	Depr. Cost	
Main Home	Ribbed	Metal	552			
			Total:	31,577	2,210	
Other Additions/Adjustments						
Water/Sewer						
1000 Gal Septic			1	4,293	301	
Water Well, 100 Feet			1	5,545	388	
Porches						
CGEP (1 Story)			84	4,085	41	*5
			Totals:	45,500	2,940	

Notes:
ECF (RESIDENTIAL) 1.297 => TCV: 3,813

*** Information herein deemed reliable but not guaranteed***

this property value would be on the land not the trailer or shed

Walls on enclosed porch is falling down

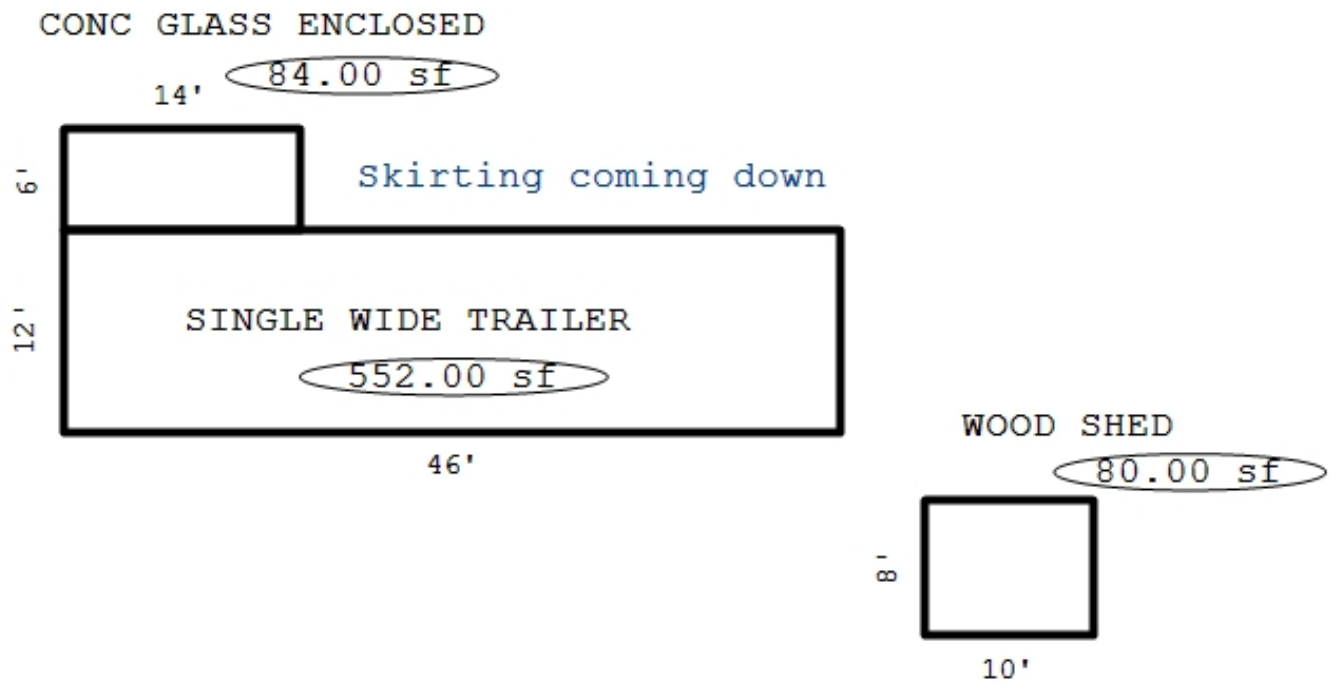

*** Information herein deemed reliable but not guaranteed***

Parcel Number: 2410-09-1401-03 Jurisdiction: GREENWOOD TWP County: WEXFORD Printed on 02/15/2024

Grantor	Grantee	Sale Price	Sale Date	Inst. Type	Terms of Sale	Liber & Page	Verified By	Prcnt. Trans.
WARD, MEGHAN E	WARD MEGHAN E & MARTIN W	0	07/06/2023	QC	21-NOT USED/OTHER	695/1858	PROPERTY TRANSFER	0.0
MEINER, SCOTT WAYNE	WARD, MEGHAN E	100	07/20/2020	QC	09-FAMILY	687 /2486	DEED	0.0

Property Address

2847 E 4 1/2 RD

Owner's Name/Address

WARD MEGHAN E & MARTIN W
2847 E 4 1/2 RD
MANTON MI 49663

Tax Description

PAR A; COM AT E 1/4 COR OF SEC; W 990.38 FT TO POB: W 329.92 FT; N 1319.66 FT; E 329.92FT; S 1319.30 FT & PAR B; COM AT E 1/4 COR OF SEC; W 6660.28 FT TO POB: W 330.10 FT; N 1319.66 FT; E 329.92FT; S 1319.30 FT & TOG W/ & SUB TO EASMT 39.96 AC. GW. SEC. 9 T24N R10W -MANTON- [[ASSESSED W/ 09-1401 '04 CONBINED ON 01/14/2019 WITH 2410-09-1401, 2410-09-1402, 2410-09-1403 INTO 2410-09-1401-01; 9.99 A M/L. TOG W/ & SUB TO EASMT GW. SEC. 9 T24N R10W -MANTON-

The Equalizer. Copyright (c) 1999 - 2009.
Licensed To: Township of Greenwood, County of Wexford, Michigan

Class: RESIDENTIAL-IMPROV Zoning:
School: MANTON CONSOLIDATED SCHOOLS
P.R.E. 100% 04/19/2022
:
2024 Est TCV 350,599 TCV/TFA: 231.88

Building Permit(s)	Date	Number	Status
Garage, Detached	08/03/2021	PB21-0204	ENTERED

X Improved | Vacant

Public Improvements

- Dirt Road
- Gravel Road
- Paved Road
- Storm Sewer
- Sidewalk
- Water
- Sewer
- Electric
- Gas
- Curb
- Street Lights
- Standard Utilities
- Underground Utils.

Topography of Site

- Level
- Rolling
- Low
- High
- Landscaped
- Swamp
- Wooded
- Pond
- Waterfront
- Ravine
- Wetland
- Flood Plain

Who	When	What
DB	10/23/2023	INSPECTION
GLA	05/13/2021	INSPECTION

Land Value Estimates for Land Table 4010.LAND VALUES

Description	Frontage	Depth	* Factors * Front	Depth	Rate	%Adj.	Reason	Value
ACREAGE			19.980 Acres		3,200	100		63,936
			19.98 Total Acres			Total Est. Land Value =		63,936

Year	Land Value	Building Value	Assessed Value	Board of Review	Tribunal/ Other	Taxable Value
2024	32,000	143,300	175,300			125,108C
2023	26,000	116,500	142,500			119,151C
2022	22,000	88,400	110,400			100,906C
2021	20,000	0	20,000			16,947C

*** Information herein deemed reliable but not guaranteed***

Building Type

X	Single Family
	Mobile Home
	Town Home
	Duplex
	A-Frame
X	Wood Frame

Building Style: PLAIN

Yr Built	Remodeled
0	0

Condition: Good

Room List

	Basement
	1st Floor
	2nd Floor
	Bedrooms

(1) Exterior

	Wood/Shingle
X	Aluminum/Vinyl
	Brick
X	Insulation

(2) Windows

	Many		Large
X	Avg.	X	Avg.
	Few		Small

	Wood Sash
	Metal Sash
X	Vinyl Sash
	Double Hung
	Horiz. Slide
	Casement
	Double Glass
	Patio Doors
X	Storms & Screens

(3) Roof

X	Gable		Gambrel
	Hip		Mansard
	Flat		Shed

X	Asphalt Shingle

Chimney:

(3) Roof (cont.)

	Eavestrough
X	Insulation
0	Front Overhang
0	Other Overhang

(4) Interior

X	Drywall		Plaster
	Paneled		Wood T&G

Trim & Decoration

	Ex	X	Ord		Min

Size of Closets

	Lg	X	Ord		Small

Doors:		Solid	X	H.C.	

(5) Floors

Kitchen:
Other: Linoleum
Other: Carpeted

(6) Ceilings

X	Drywall		

(7) Excavation

Basement: 1512 S.F.
Crawl: 0 S.F.
Slab: 0 S.F.
Height to Joists: 0.0

(8) Basement

	Conc. Block
	Poured Conc.
	Stone
	Treated Wood
	Concrete Floor

(9) Basement Finish

	Recreation SF
	Living SF
	Walkout Doors (B)
	No Floor SF
	Walkout Doors (A)

(10) Floor Support

Joists:
Unsupported Len:
Cntr.Sup:

(11) Heating/Cooling

X	Gas		Oil		Elec.
	Wood		Coal		Steam

	Forced Air w/o Ducts
X	Forced Air w/ Ducts
	Forced Hot Water
	Electric Baseboard
	Elec. Ceil. Radiant
	Radiant (in-floor)
	Electric Wall Heat
	Space Heater
	Wall/Floor Furnace
	Forced Heat & Cool
	Heat Pump
	No Heating/Cooling
	Central Air
	Wood Furnace

(12) Electric

150	Amps Service

No./Qual. of Fixtures

	Ex.	X	Ord.		Min

No. of Elec. Outlets

	Many	X	Ave.		Few

(13) Plumbing

	Average Fixture(s)
1	3 Fixture Bath
	2 Fixture Bath
	Softener, Auto
	Softener, Manual
	Solar Water Heat
	No Plumbing
	Extra Toilet
	Extra Sink
	Separate Shower
	Ceramic Tile Floor
	Ceramic Tile Wains
	Ceramic Tub Alcove
	Vent Fan

(14) Water/Sewer

	Public Water
	Public Sewer
1	Water Well
1	1000 Gal Septic
	2000 Gal Septic

Lump Sum Items:

(15) Built-ins

	Appliance Allow.
	Cook Top
	Dishwasher
	Garbage Disposal
	Bath Heater
	Vent Fan
	Hot Tub
	Unvented Hood
	Vented Hood
	Intercom
	Jacuzzi Tub
	Jacuzzi repl.Tub
	Oven
	Microwave
	Standard Range
	Self Clean Range
	Sauna
	Trash Compactor
	Central Vacuum
	Security System

(15) Fireplaces

	Interior 1 Story
	Interior 2 Story
	2nd/Same Stack
	Two Sided
	Exterior 1 Story
	Exterior 2 Story
	Prefab 1 Story
	Prefab 2 Story
	Heat Circulator
	Raised Hearth
	Wood Stove
	Direct-Vented Gas

Class: CD
Effec. Age: 4
Floor Area: 1,512
Total Base New : 230,227 E.C.F.
Total Depr Cost: 221,020 X 1.297
Estimated T.C.V: 286,663

(16) Porches/Decks

Area	Type
16	WPP
16	WPP

(17) Garage

Year Built:
Car Capacity:
Class: CD
Exterior: Pole
Brick Ven.: 0
Stone Ven.: 0
Common Wall: Detache
Foundation: 18 Inch
Finished ?:
Auto. Doors: 0
Mech. Doors: 0
Area: 1200
% Good: 0
Storage Area: 0
No Conc. Floor: 0

Bsmnt Garage:

Carport Area:
Roof:

Cost Est. for Res. Bldg: 1 Single Family PLAIN Cls CD Blt 0
(11) Heating System: Forced Air w/ Ducts
Ground Area = 1512 SF Floor Area = 1512 SF.
Phy/Ab.Phy/Func/Econ/Comb. % Good=96/100/100/100/96
Building Areas

Stories	Exterior	Foundation	Size	Cost New	Depr. Cost
1 Story	Siding	Basement	1,512		
			Total:	192,255	184,566
Other Additions/Adjustments					
Water/Sewer					
1000 Gal Septic			1	4,582	4,399
Water Well, 100 Feet			1	5,680	5,453
Porches					
WPP			16	805	773
WPP			16	805	773
Garages					
Class: CD Exterior: Pole (Unfinished)					
Base Cost			1200	26,100	25,056
			Totals:	230,227	221,020

Notes:
ECF (RESIDENTIAL) 1.297 => TCV: 286,663

*** Information herein deemed reliable but not guaranteed***

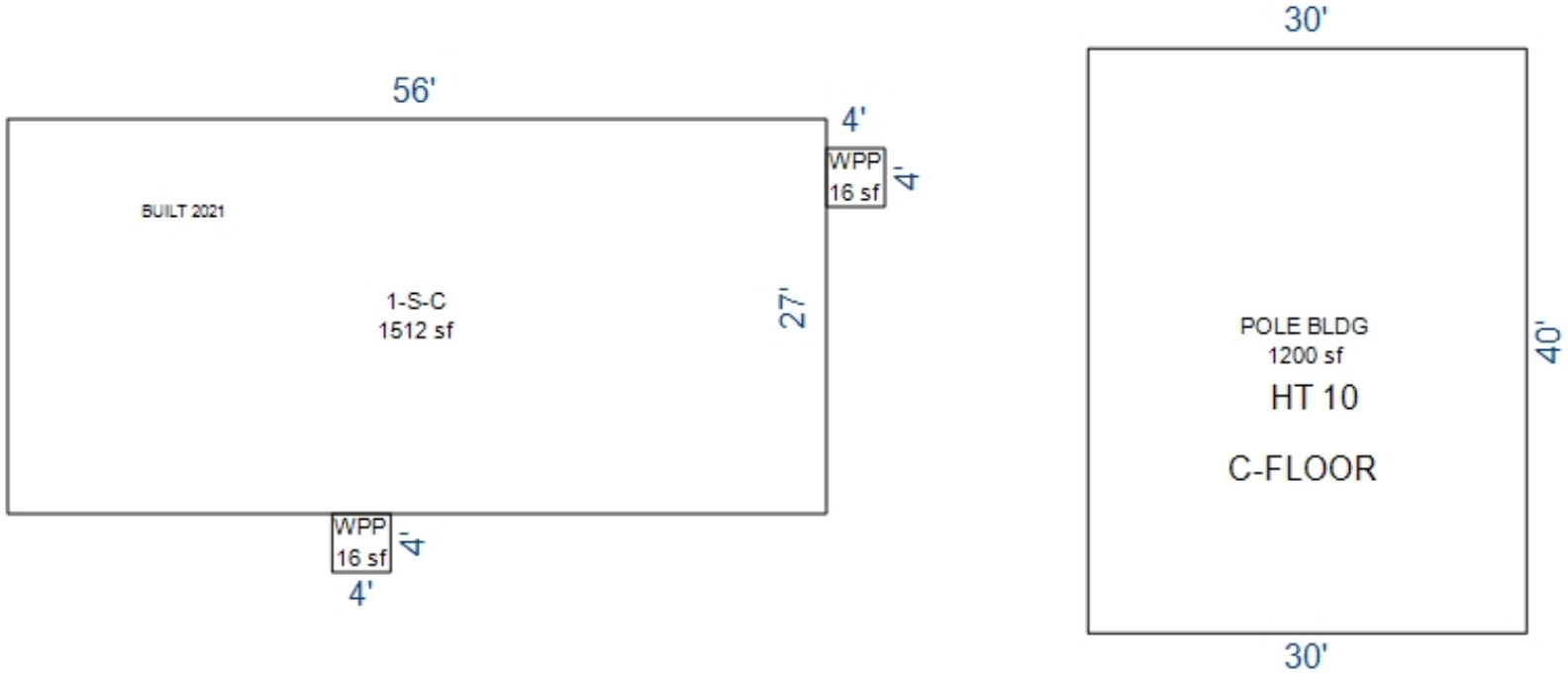

*** Information herein deemed reliable but not guaranteed***

Parcel Number: 2410-09-4101 Jurisdiction: GREENWOOD TWP County: WEXFORD Printed on 02/15/2024

Grantor	Grantee	Sale Price	Sale Date	Inst. Type	Terms of Sale	Liber & Page	Verified By	Prcnt. Trans.

Property Address

Owner's Name/Address

STATE OF MICHIGAN
P O BOX 30735
GRANTS ADMINISTRATION
LANSING MI 48909-8235

Tax Description

SE 1/4 160 A. GW. SEC. 9 T24N R10W
-MANTON-

Comments/Influences

The Equalizer. Copyright (c) 1999 - 2009. Licensed To: Township of Greenwood, County of Wexford, Michigan

Class: AGRICULTURAL-VACAN Zoning:

School: MANTON CONSOLIDATED SCHOOLS

P.R.E. 0%

:

2024 Est TCV 0

Building Permit(s)	Date	Number	Status

	Improved	X	Vacant

Public Improvements

- Dirt Road
- Gravel Road
- Paved Road
- Storm Sewer
- Sidewalk
- Water
- Sewer
- Electric
- Gas
- Curb
- Street Lights
- Standard Utilities
- Underground Utils.

Topography of Site

- Level
- Rolling
- Low
- High
- Landscaped
- Swamp
- Wooded
- Pond
- Waterfront
- Ravine
- Wetland
- Flood Plain

Who	When	What
GLA	05/08/2016	INSPECTION

Land Value Estimates for Land Table 4010.LAND VALUES

Description	Frontage	Depth	* Factors * Front	Depth	Rate	%Adj.	Reason	Value
ACREAGE			155.170 Acres		2,480	100		384,822
			4.830 Acres		0	100		0
			160.00 Total Acres		Total Est. Land Value =			384,822

Year	Land Value	Building Value	Assessed Value	Board of Review	Tribunal/ Other	Taxable Value
2024	EXEMPT	EXEMPT	EXEMPT			EXEMPT
2023	EXEMPT	EXEMPT	EXEMPT			EXEMPT
2022	0	0	0			0
2021	0	0	0			0

*** Information herein deemed reliable but not guaranteed***

Parcel Number: 2410-10-1101 Jurisdiction: GREENWOOD TWP County: WEXFORD Printed on 02/15/2024

Grantor	Grantee	Sale Price	Sale Date	Inst. Type	Terms of Sale	Liber & Page	Verified By	Prcnt. Trans.
OLDS, RICHARD R.	OLDS AARON P & OLDS JUSTIN	0	10/29/2023	QC	21-NOT USED/OTHER		DEED	0.0
OLDS, RICHARD R.	FARQUHAR, SHARON (FKA, OLI	0	06/24/2019	PTA	21-NOT USED/OTHER		DEED	0.0
OLDS, JAMES H & SHARON	OLDS, JAMES H	0	06/24/2019	QC	06-COURT JUDGEMENT	685/899	DEED	0.0

Property Address

Class: AGRICULTURAL-VACAN Zoning:

School: KINGSLEY AREA SCHOOL

P.R.E. 100% / / Qual. Ag.

:

2024 Est TCV 353,993

Building Permit(s)	Date	Number	Status

Owner's Name/Address

OLDS AARON P & OLDS JUSTIN T
SHERMAN SARAH E & ETAL
22447 N NOTTINGHAM DR
FRANKLIN MI 48025

Tax Description

THAT PART OF E 1/2 OF NE 1/4 N OF MANISTEE RIVER --59.14 A M/L-- GW. SEC. 10 T24N R10W -KINGSLEY-

Comments/Influences

The Equalizer. Copyright (c) 1999 - 2009. Licensed To: Township of Greenwood, County of Wexford, Michigan

	Improved	X	Vacant

	Public Improvements
X	Dirt Road
X	Gravel Road
	Paved Road
	Storm Sewer
	Sidewalk
	Water
	Sewer
	Electric
	Gas
	Curb
	Street Lights
	Standard Utilities
	Underground Utils.

	Topography of Site
	Level
X	Rolling
X	Low
	High
	Landscaped
X	Swamp
X	Wooded
	Pond
	Waterfront
	Ravine
	Wetland
	Flood Plain

Who	When	What
GLA	10/31/2022	INSPECTION
LM	05/08/2006	INSPECTED
LM	08/23/2012	APPR INSPE

Land Value Estimates for Land Table 1010.AG

Description	Frontage	Depth	* Factors * Front	Depth	Rate	%Adj.	Reason	Value
RIVER LOW	825.00	100.00	1.0000	1.0000	315	75	LOW	194,906
AG LAND	40 ACRES		59.14 Acres		2690	100		159,087
825 Actual Front Feet, 61.03 Total Acres							Total Est. Land Value =	353,993

Year	Land Value	Building Value	Assessed Value	Board of Review	Tribunal/ Other	Taxable Value
2024	177,000	0	177,000			39,685C
2023	150,700	0	150,700			37,796C
2022	136,800	0	136,800			35,997C
2021	112,100	0	112,100			34,848C

*** Information herein deemed reliable but not guaranteed***

Parcel Number: 2410-10-1201 Jurisdiction: GREENWOOD TWP County: WEXFORD Printed on 02/15/2024

Grantor	Grantee	Sale Price	Sale Date	Inst. Type	Terms of Sale	Liber & Page	Verified By	Prcnt. Trans.
UMLOR, TERRI JO	UMLOR, TERRENCE L & TERRI	1	03/01/2017	WD	14-INTO/OUT OF TRUST	6791/763	DEED	0.0
DUROCHER, MICHAEL & CHARLE	CONRAD, TERRI	249,000	04/26/2001	WD	08-ESTATE	380:462	DEED	0.0
DUROCHER, MICHAEL & CHARLE	CONRAD, TERRI J	249,000	12/28/2000	LC	03-ARM'S LENGTH	378:59	DEED	0.0

Property Address

10973 N 31 3/4 RD

Owner's Name/Address

UMLOR, TERRENCE L & TERRI JO TRUST
10973 N 31 3/4 RD
KINGSLEY MI 49649

Tax Description

W 1/2 OF NE 1/4 LYING NORTH OF MANISTEE RIVER --27.58 A M/L-- GW. SEC. 10 T24N R10W -KINGSLEY-

Comments/Influences

Class: RESIDENTIAL-IMPROV Zoning:

School: KINGSLEY AREA SCHOOL

P.R.E. 100% / /

:

2024 Est TCV 897,122 TCV/TFA: 354.17

Building Permit(s)	Date	Number	Status
RESIDENTIAL - NEW	02/20/2002	PE14291	
RESIDENTIAL - REMODEL	12/19/2001	PM5625	
RESIDENTIAL - REMODEL	12/04/2001	PB10707	

X Improved | Vacant

Public Improvements

- Dirt Road
- X Gravel Road
- Paved Road
- Storm Sewer
- Sidewalk
- Water
- Sewer
- X Electric
- Gas
- Curb
- Street Lights
- Standard Utilities
- Underground Utils.

Topography of Site

- X Level
- Rolling
- Low
- X High
- Landscaped
- Swamp
- X Wooded
- Pond
- Waterfront
- Ravine
- Wetland
- Flood Plain
- X OPEN/PINES

Who When What

GLA 05/08/2016 INSPECTION

Land Value Estimates for Land Table 4010.LAND VALUES

Description	Frontage	Depth	* Factors * Front	Depth	Rate	%Adj.	Reason	Value
MAN -RIVER LOW	1500.00	0.00	1.0000	1.0000	315	100	SIZE	472,500
ACREAGE			27.580 Acres		2,722	100		75,073
1500 Actual Front Feet, 27.58 Total Acres							Total Est. Land Value =	547,573

Land Improvement Cost Estimates

Description	Rate	Size	% Good	Cash Value
D/W/P: Asphalt Paving	3.12	7850	53	12,981
D/W/P: 4in Concrete	7.01	576	53	2,140
Wood Frame	23.91	288	44	3,030
Total Estimated Land Improvements True Cash Value =				18,151

Year	Land Value	Building Value	Assessed Value	Board of Review	Tribunal/ Other	Taxable Value
2024	273,800	174,800	448,600			73,105C
2023	256,500	144,100	400,600			69,624C
2022	232,100	122,400	354,500			66,309C
2021	176,000	123,600	299,600			64,191C

The Equalizer. Copyright (c) 1999 - 2009. Licensed To: Township of Greenwood, County of Wexford, Michigan

*** Information herein deemed reliable but not guaranteed***

Building Type

X	Single Family
	Mobile Home
	Town Home
	Duplex
	A-Frame
X	Wood Frame

Building Style: PLAIN

Yr Built	Remodeled
1990	1990

Condition: Good

Room List

	Basement
	1st Floor
	2nd Floor
	Bedrooms

(1) Exterior

	Wood/Shingle
X	Aluminum/Vinyl
	Brick
X	Insulation

(2) Windows

X	Many Avg. Few		Large Avg. Small

	Wood Sash
	Metal Sash
X	Vinyl Sash
	Double Hung
	Horiz. Slide
	Casement
	Double Glass
	Patio Doors
X	Storms & Screens

(3) Roof

X	Gable		Gambrel
	Hip		Mansard
	Flat		Shed

X	Asphalt Shingle

Chimney:

(3) Roof (cont.)

	Eavestrough
X	Insulation
0	Front Overhang
0	Other Overhang

(4) Interior

X	Drywall Paneled		Plaster Wood T&G

Trim & Decoration

	Ex	X	Ord		Min

Size of Closets

	Lg	X	Ord		Small

Doors:		Solid	X	H.C.	

(5) Floors

Kitchen:
Other: Linoleum
Other: Carpeted

(6) Ceilings

X	Drywall

(7) Excavation

Basement: 901 S.F.
Crawl: 0 S.F.
Slab: 1632 S.F.
Height to Joists: 0.0

(8) Basement

	Conc. Block
	Poured Conc.
	Stone
	Treated Wood
	Concrete Floor

(9) Basement Finish

	Recreation	SF
	Living	SF
1	Walkout Doors	(B)
	No Floor	SF
	Walkout Doors	(A)

(10) Floor Support

Joists:
Unsupported Len:
Cntr.Sup:

(11) Heating/Cooling

X	Gas		Oil		Elec.
	Wood		Coal		Steam

	Forced Air w/o Ducts
X	Forced Air w/ Ducts
	Forced Hot Water
	Electric Baseboard
	Elec. Ceil. Radiant
	Radiant (in-floor)
	Electric Wall Heat
	Space Heater
	Wall/Floor Furnace
	Forced Heat & Cool
	Heat Pump
	No Heating/Cooling

	Central Air
	Wood Furnace

(12) Electric

150	Amps Service

No./Qual. of Fixtures

	Ex.	X	Ord.		Min

No. of Elec. Outlets

	Many	X	Ave.		Few

(13) Plumbing

	Average Fixture(s)
2	3 Fixture Bath
	2 Fixture Bath
	Softener, Auto
	Softener, Manual
	Solar Water Heat
	No Plumbing
	Extra Toilet
	Extra Sink
	Separate Shower
	Ceramic Tile Floor
	Ceramic Tile Wains
	Ceramic Tub Alcove
	Vent Fan

(14) Water/Sewer

	Public Water
	Public Sewer
1	Water Well
1	1000 Gal Septic
	2000 Gal Septic

Lump Sum Items:

(15) Built-ins

	Appliance Allow.
	Cook Top
	Dishwasher
	Garbage Disposal
	Bath Heater
	Vent Fan
	Hot Tub
	Unvented Hood
	Vented Hood
	Intercom
	Jacuzzi Tub
	Jacuzzi repl.Tub
	Oven
	Microwave
	Standard Range
	Self Clean Range
	Sauna
	Trash Compactor
	Central Vacuum
	Security System

(15) Fireplaces

	Interior 1 Story
	Interior 2 Story
	2nd/Same Stack
	Two Sided
	Exterior 1 Story
	Exterior 2 Story
	Prefab 1 Story
	Prefab 2 Story
	Heat Circulator
	Raised Hearth
	Wood Stove
	Direct-Vented Gas

Class: CD
Effec. Age: 35
Floor Area: 2,533
Total Base New : 394,174 E.C.F.
Total Depr Cost: 255,511 X 1.297
Estimated T.C.V: 331,398

(16) Porches/Decks

Area	Type
192	WGEP (1 Story)
500	WPP
336	CCP (1 Story)
1029	WPP

(17) Garage

Year Built:
Car Capacity:
Class: CD
Exterior: Pole
Brick Ven.: 0
Stone Ven.: 0
Common Wall: Detache
Foundation: 18 Inch
Finished ?:
Auto. Doors: 0
Mech. Doors: 0
Area: 640
% Good: 0
Storage Area: 0
No Conc. Floor: 0

Bsmnt Garage:

Carport Area:
Roof:

Cost Est. for Res. Bldg: 1 Single Family PLAIN Cls CD Blt 1990
(11) Heating System: Forced Air w/ Ducts
Ground Area = 2533 SF Floor Area = 2533 SF.
Phy/Ab.Phy/Func/Econ/Comb. % Good=65/100/100/100/65
Building Areas

Stories	Exterior	Foundation	Size	Cost New	Depr. Cost
1 Story	Siding	Slab	1,536		
1 Story	Siding	Basement	901		
1 Story	Siding	Slab	96		
			Total:	273,807	177,975
Other Additions/Adjustments					
Basement, Outside Entrance, Below Grade			1	2,176	1,414
Plumbing					
3 Fixture Bath			1	3,887	2,527
Water/Sewer					
1000 Gal Septic			1	4,582	2,978
Water Well, 100 Feet			1	5,680	3,692
Porches					
WGEP (1 Story)			192	13,523	8,790
WPP			500	7,445	4,839
CCP (1 Story)			336	7,540	4,901
WPP			1029	14,468	9,404
Garages					
Class: CD Exterior: Pole (Unfinished)					
Base Cost			640	16,115	10,475
Class: CD Exterior: Pole (Unfinished)					
Base Cost			1920	41,760	27,144
Local Cost Items					
POLE LEAN TO			180	945	406 *4
SHED			288	2,246	966 *4

<<<<< Calculations too long. See Valuation printout for complete pricing. >>>>>

*** Information herein deemed reliable but not guaranteed***

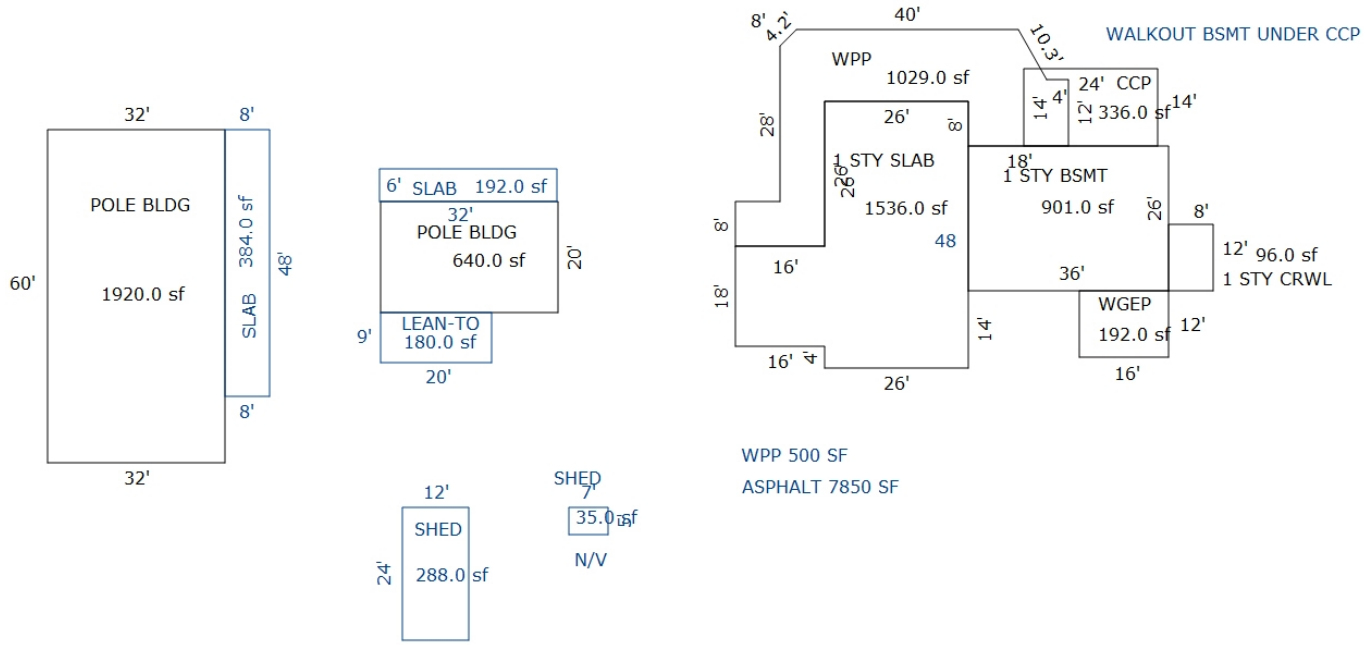

Sketch by Apex Sketch

*** Information herein deemed reliable but not guaranteed***

Parcel Number: 2410-10-1202 Jurisdiction: GREENWOOD TWP County: WEXFORD Printed on 02/15/2024

Grantor	Grantee	Sale Price	Sale Date	Inst. Type	Terms of Sale	Liber & Page	Verified By	Prcnt. Trans.
BUSSELL, JAMES	BUSSELL, JAMES & CHRISTINE	100	09/29/2022	QC	21-NOT USED/OTHER	694/107	DEED	0.0
TERRELL, JEFFERY H.	BUSSELL, JAMES	87,500	09/19/2019	WD	03-ARM'S LENGTH	685 /2525	DEED	100.0
DUNBAR, LEO & BETTY	TERRELL, JEFFERY H.	12,500	05/19/1997	WD	16-LC PAYOFF	669;2494-2495	DEED	0.0
DUNBAR, LEO A.	TERRELL, JEFFERY H.	12,500	10/05/1990	LC	03-ARM'S LENGTH	322:463	DEED	0.0

Property Address

3605 RIVERVIEW RD

Owner's Name/Address

BUSSELL, JAMES & CHRISTINE
1491 KENT ST #6
TRAVERSE CITY MI 49686

Tax Description

PARCEL A DESC AS COM AT E 1/4 COR OF SEC 10, W 935.06 FT ALONG E/W 1/4 & S LINE OF RETREAT PLAT TO SW COR OF PLAT & POB: W 1195.39 FT; N 1405 FT TO A PT ON BNK OF MANISTEE RVR; SELY 487 FT ALONG RIVER TO NW COR OF PLAT ON BNK OF RVR; S 26D58M04S W 349.49 FT, RECORDED AS S 27D17M W 350.09 FT, ALONG W BOUNDARY OF PLAT; S 53D05M01S E 79.02 FT, RECORDED AS S 53D W 79.25 FT; S 30D56M10S W 399.70 FT, RECORDED AS S 31D W 399.54 FT; S 59D00M27S E 160.61 FT, RECORDED AS S 59D E 160.52 FT; S 64D02M02S E 283.24 FT,

The Equalizer. Copyright (c) 1999 - 2009. Licensed To: Township of Greenwood, County of Wexford, Michigan

Class: RESIDENTIAL-IMPROV Zoning:
School: MANTON CONSOLIDATED SCHOOLS
P.R.E. 0%
:
2024 Est TCV 301,685 TCV/TFA: 85.13

Building Permit(s)	Date	Number	Status
RESIDENTIAL - NEW	11/28/2022	PB22--0218	ENTERED
RESIDENTIAL - NEW	11/10/2021	PB21-162	COMPLETE

X Improved | Vacant

	Public Improvements
	Dirt Road
X	Gravel Road
	Paved Road
	Storm Sewer
	Sidewalk
	Water
	Sewer
X	Electric
	Gas
	Curb
	Street Lights
	Standard Utilities
	Underground Utils.

	Topography of Site
X	Level
X	Rolling
	Low
X	High
	Landscaped
	Swamp
X	Wooded
	Pond
	Waterfront
	Ravine
	Wetland
	Flood Plain
X	OPEN

Who	When	What
JB	10/24/2023	INSPECTION
GLA	05/05/2016	INSPECTION

Land Value Estimates for Land Table 4010.LAND VALUES

Description	Frontage	Depth	* Factors * Front	Depth	Rate	%Adj.	Reason	Value
HELSEL RIV LOW	487.00	0.00	1.0000	1.0000	315	100		153,405
487 Actual Front Feet, 0.00 Total Acres							Total Est. Land Value =	153,405

Land Improvement Cost Estimates

Description	Rate	Size	% Good	Cash Value
Wood Frame	22.90	384	100	8,794
Total Estimated Land Improvements True Cash Value =				8,794

Year	Land Value	Building Value	Assessed Value	Board of Review	Tribunal/ Other	Taxable Value
2024	76,700	74,100	150,800			116,765C
2023	65,700	0	65,700			49,491C
2022	65,700	0	65,700			47,135C
2021	48,700	0	48,700			45,630C

*** Information herein deemed reliable but not guaranteed***

Building Type

X	Single Family
	Mobile Home
	Town Home
	Duplex
	A-Frame
X	Wood Frame

Building Style: POLE BARN HOUSE

Yr Built	Remodeled
2023	0

Condition: Good
Part. Construct.: 25%

Room List

	Basement
	1st Floor
	2nd Floor
	Bedrooms

(1) Exterior

	Wood/Shingle
X	Aluminum/Vinyl
	Brick
X	Insulation

(2) Windows

X	Many Avg. Few	X	Large Avg. Small

	Wood Sash
	Metal Sash
X	Vinyl Sash
	Double Hung
	Horiz. Slide
	Casement
	Double Glass
	Patio Doors
X	Storms & Screens

(3) Roof

X	Gable Hip Flat		Gambrel Mansard Shed
X	Asphalt Shingle		

Chimney:

(3) Roof (cont.)

	Eavestrough
X	Insulation
0	Front Overhang
0	Other Overhang

(4) Interior

X	Drywall Paneled		Plaster Wood T&G

Trim & Decoration

	Ex	X	Ord		Min

Size of Closets

	Lg	X	Ord		Small

Doors:		Solid	X	H.C.	

(5) Floors

Kitchen:
Other: Linoleum
Other: Carpeted

(6) Ceilings

X	Drywall

(7) Excavation

Basement: 0 S.F.
Crawl: 0 S.F.
Slab: 1772 S.F.
Height to Joists: 0.0

(8) Basement

	Conc. Block
	Poured Conc.
	Stone
	Treated Wood
	Concrete Floor

(9) Basement Finish

	Recreation SF
	Living SF
	Walkout Doors (B)
	No Floor SF
	Walkout Doors (A)

(10) Floor Support

Joists:
Unsupported Len:
Cntr.Sup:

(11) Heating/Cooling

X	Gas Wood		Oil Coal		Elec. Steam	

	Forced Air w/o Ducts
X	Forced Air w/ Ducts
	Forced Hot Water
	Electric Baseboard
	Elec. Ceil. Radiant
	Radiant (in-floor)
	Electric Wall Heat
	Space Heater
	Wall/Floor Furnace
	Forced Heat & Cool
	Heat Pump
	No Heating/Cooling
	Central Air
	Wood Furnace

(12) Electric

150	Amps Service

No./Qual. of Fixtures

	Ex.	X	Ord.		Min

No. of Elec. Outlets

	Many	X	Ave.		Few

(13) Plumbing

	Average Fixture(s)
2	3 Fixture Bath
	2 Fixture Bath
	Softener, Auto
	Softener, Manual
	Solar Water Heat
	No Plumbing
	Extra Toilet
	Extra Sink
	Separate Shower
	Ceramic Tile Floor
	Ceramic Tile Wains
	Ceramic Tub Alcove
	Vent Fan

(14) Water/Sewer

	Public Water
	Public Sewer
1	Water Well
	1000 Gal Septic
1	2000 Gal Septic

Lump Sum Items:

(15) Built-ins

1	Appliance Allow.
	Cook Top
	Dishwasher
	Garbage Disposal
	Bath Heater
	Vent Fan
	Hot Tub
	Unvented Hood
	Vented Hood
	Intercom
	Jacuzzi Tub
	Jacuzzi repl.Tub
	Oven
	Microwave
	Standard Range
	Self Clean Range
	Sauna
	Trash Compactor
	Central Vacuum
	Security System

(15) Fireplaces

	Interior 1 Story
	Interior 2 Story
	2nd/Same Stack
	Two Sided
	Exterior 1 Story
	Exterior 2 Story
	Prefab 1 Story
	Prefab 2 Story
	Heat Circulator
	Raised Hearth
	Wood Stove
	Direct-Vented Gas

Class: C
Effec. Age: 1
Floor Area: 3,544
Total Base New : 434,526 E.C.F.
Total Depr Cost: 430,181 X 1.297
Estimated T.C.V: 557,945

(16) Porches/Decks

Area	Type

(17) Garage

Year Built: 2023
Car Capacity:
Class: C
Exterior: Siding
Brick Ven.: 0
Stone Ven.: 0
Common Wall: 1 Wall
Foundation: 42 Inch
Finished ?:
Auto. Doors: 2
Mech. Doors: 0
Area: 1420
% Good: 0
Storage Area: 0
No Conc. Floor: 0

Bsmnt Garage:

Carport Area:
Roof:

Cost Est. for Res. Bldg: 1 Single Family POLE BARN HOUSE Cls C Blt 2023
(11) Heating System: Forced Air w/ Ducts
Ground Area = 1772 SF Floor Area = 3544 SF.
Phy/Ab.Phy/Func/Econ/Comb. % Good=99/100/100/100/99
Building Areas

Stories	Exterior	Foundation	Size	Cost New	Depr. Cost
2 Story	Siding	Slab	1,772		
			Total:	359,483	355,889
Other Additions/Adjustments					
Plumbing					
3 Fixture Bath			1	4,678	4,631
Water/Sewer					
2000 Gal Septic			1	9,735	9,638
Water Well, 150 Feet			1	8,655	8,568
Garages					
Class: C Exterior: Siding Foundation: 42 Inch (Unfinished)					
Common Wall: 1 Wall			1	-2,705	-2,678
Door Opener			2	1,101	1,090
Base Cost			1420	50,793	50,285
Built-Ins					
Appliance Allow.			1	2,786	2,758
			Totals:	434,526	430,181

Notes:

ECF (RESIDENTIAL) 1.297 => TCV: 557,945
25% Completed => Est. True Cash Value 2024 =

*** Information herein deemed reliable but not guaranteed***

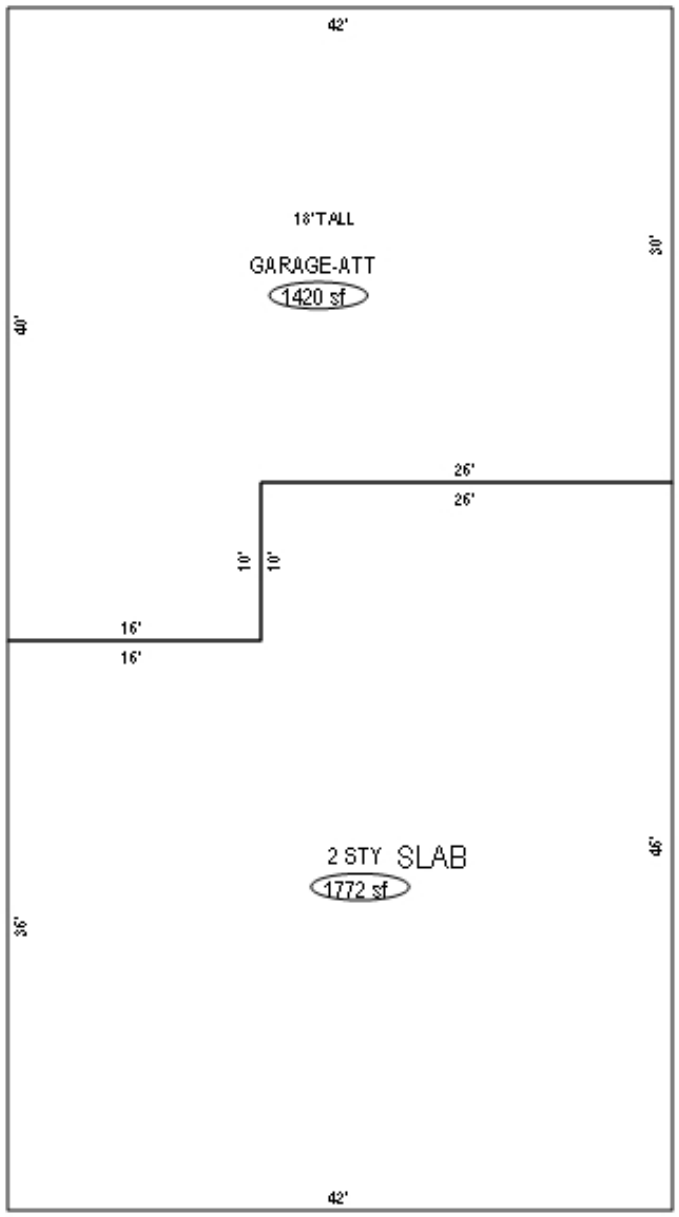

*** Information herein deemed reliable but not guaranteed***

Parcel Number: 2410-10-1203 Jurisdiction: GREENWOOD TWP County: WEXFORD Printed on 02/15/2024

Grantor	Grantee	Sale Price	Sale Date	Inst. Type	Terms of Sale	Liber & Page	Verified By	Prcnt. Trans.
BRAND, NEIL J & MARIANNE T	WALKER, JEFFREY & ARMANDIN	75,000	07/13/2012	WD	03-ARM'S LENGTH	649/2657	DEED	100.0
DUNBAR, LEO & BETTY	BRAND, NEIL & MARIANNE	12,500	08/21/2000	WD	08-ESTATE	379:970	DEED	0.0
DUNBAR, LEO A.	BRAND, NEIL J.	12,500	10/05/1990	LC	03-ARM'S LENGTH	322:504	DEED	0.0

Property Address

3539 RIVERVIEW RD

Owner's Name/Address

WALKER, JEFFREY & ARMANDINA
1853 VANS BLVD
HOLLAND MI 49423

Tax Description

PARCEL "B" DESC AS COM AT E 1/4 COR OF SECTION, TH W 2130.45 FT TO POB: TH W 459.59 FT TO CENTER 1/4 COR OF SEC; TH N 2177.53 FT ALONG N-S 1/4 LINE TO A PT ON BANK OF MANISTEE RIVER; TH SE'LY 891 FT M/L ALONG RIVER TO A PT 1405 FT N FROM POB; TH S 1405 FT TO POB. TOG WITH & SUB TO EASEMTS. --20.81 A M/L-- GW. SEC. 10 T24N R10W --MANTON--

Comments/Influences

Class: RESIDENTIAL-IMPROV Zoning:

School: MANTON CONSOLIDATED SCHOOLS

P.R.E. 0%

:

2024 Est TCV 354,949 TCV/TFA: 234.75

Building Permit(s)	Date	Number	Status
Manufactured home	07/07/2014	PB14-01417	COMPLETE

X	Improved		Vacant

	Public Improvements
X	Dirt Road
X	Gravel Road
	Paved Road
	Storm Sewer
	Sidewalk
	Water
	Sewer
X	Electric
	Gas
	Curb
	Street Lights
	Standard Utilities
	Underground Utils.

	Topography of Site
X	Level
X	Rolling
	Low
X	High
	Landscaped
	Swamp
X	Wooded
	Pond
	Waterfront
	Ravine
	Wetland
	Flood Plain
X	OPEN/PINES

Who	When	What
GLA	05/13/2021	INSPECTION
LM	10/28/2011	APPR INSPE
LM	08/24/2012	SALES INSP

Land Value Estimates for Land Table 4010.LAND VALUES

Description	Frontage	Depth	* Factors * Front	Depth	Rate	%Adj.	Reason	Value
MAN -RIVER LOW	891.00	0.00	1.0000	1.0000	315	100		280,665
891 Actual Front Feet, 0.00 Total Acres							Total Est. Land Value =	280,665

Land Improvement Cost Estimates

Description	Rate	Size	% Good	Cash Value
D/W/P: 3.5 Concrete	6.63	120	37	295
Total Estimated Land Improvements True Cash Value =				295

Year	Land Value	Building Value	Assessed Value	Board of Review	Tribunal/ Other	Taxable Value
2024	140,300	37,200	177,500			50,253C
2023	131,900	31,600	163,500			47,860C
2022	120,300	27,300	147,600			45,581C
2021	89,100	24,200	113,300			44,125C

The Equalizer. Copyright (c) 1999 - 2009.
Licensed To: Township of Greenwood, County of Wexford, Michigan

*** Information herein deemed reliable but not guaranteed***

Building Type

	Single Family
X	Mobile Home
	Town Home
	Duplex
	A-Frame

X	Wood Frame

Building Style: SWT/DWT

Yr Built	Remodeled
0	0

Condition: Good

Room List

	Basement
	1st Floor
	2nd Floor
	Bedrooms

(1) Exterior

	Wood/Shingle
	Aluminum/Vinyl
	Brick
X	Insulation

(2) Windows

	Many		Large
	Avg.	X	Avg.
	Few		Small

	Wood Sash
	Metal Sash
X	Vinyl Sash
	Double Hung
	Horiz. Slide
	Casement
	Double Glass
	Patio Doors
X	Storms & Screens

(3) Roof

X	Gable		Gambrel
	Hip		Mansard
	Flat		Shed

X	Asphalt Shingle

Chimney:

(3) Roof (cont.)

	Eavestrough
X	Insulation
0	Front Overhang
0	Other Overhang

(4) Interior

X	Drywall		Plaster
	Paneled		Wood T&G

Trim & Decoration

	Ex	X	Ord		Min

Size of Closets

	Lg	X	Ord		Small

Doors:		Solid	X	H.C.	

(5) Floors

Kitchen:
Other: Linoleum
Other: Carpeted

(6) Ceilings

X	Drywall		

(7) Excavation

Basement: 0 S.F.
Crawl: 0 S.F.
Slab: 0 S.F.
Height to Joists: 0.0

(8) Basement

	Conc. Block
	Poured Conc.
	Stone
	Treated Wood
	Concrete Floor

(9) Basement Finish

	Recreation SF
	Living SF
	Walkout Doors (B)
	No Floor SF
	Walkout Doors (A)

(10) Floor Support

Joists:
Unsupported Len:
Cntr.Sup:

(11) Heating/Cooling

X	Gas		Oil		Elec.
	Wood		Coal		Steam

X	Forced Warm Air
	Wall Furnace
	Warm & Cool Air
	Heat Pump

	Central Air
	Wood Furnace

(12) Electric

150	Amps Service

No./Qual. of Fixtures

	Ex.	X	Ord.		Min

No. of Elec. Outlets

	Many	X	Ave.		Few

(13) Plumbing

	Average Fixture(s)
2	3 Fixture Bath
	2 Fixture Bath
	Softener, Auto
	Softener, Manual
	Solar Water Heat
	No Plumbing
	Extra Toilet
	Extra Sink
	Separate Shower
	Ceramic Tile Floor
	Ceramic Tile Wains
	Ceramic Tub Alcove
	Vent Fan

(14) Water/Sewer

	Public Water
	Public Sewer
1	Water Well
1	1000 Gal Septic
	2000 Gal Septic

Lump Sum Items:

(15) Built-ins

	Appliance Allow.
	Cook Top
	Dishwasher
	Garbage Disposal
	Bath Heater
	Vent Fan
	Hot Tub
	Unvented Hood
	Vented Hood
	Intercom
	Jacuzzi Tub
	Jacuzzi repl.Tub
	Oven
	Microwave
	Standard Range
	Self Clean Range
	Sauna
	Trash Compactor
	Central Vacuum
	Security System

(15) Fireplaces

	Interior 1 Story
	Interior 2 Story
	2nd/Same Stack
	Two Sided
	Exterior 1 Story
	Exterior 2 Story
	Prefab 1 Story
	Prefab 2 Story
	Heat Circulator
	Raised Hearth
	Wood Stove
	Direct-Vented Gas

Class: Fair
Effec. Age: 18
Floor Area:
Total Base New : 111,854 E.C.F.
Total Depr Cost: 57,046 X 1.297
Estimated T.C.V: 73,989

(16) Porches/Decks

Area	Type
40	WPP

(17) Garage

Year Built: 2013
Car Capacity:
Class: CD
Exterior: Pole
Brick Ven.: 0
Stone Ven.: 0
Common Wall: Detache
Foundation: 18 Inch
Finished ?:
Auto. Doors: 0
Mech. Doors: 0
Area: 832
% Good: 0
Storage Area: 0
No Conc. Floor: 0

Bsmnt Garage:

Carport Area:
Roof:

Cost Est. for Res. Bldg: 1 Mobile Home SWT/DWT Cls Fair Blt 0
(11) Heating System: Wall Furnace
Ground Area = 1512 SF Floor Area = 1512 SF.
Phy/Ab.Phy/Func/Econ/Comb. % Good=51/100/100/100/51
Building Areas

Type	Ext. Walls	Roof/Fnd.	Size	Cost New	Depr. Cost
Main Home	Ribbed	Metal	1512		
			Total:	77,593	39,572
Other Additions/Adjustments					
Plumbing					
3 Fixture Bath			1	2,745	1,400
Water/Sewer					
1000 Gal Septic			1	4,582	2,337
Water Well, 100 Feet			1	5,680	2,897
Porches					
WPP			40	1,735	885
Garages					
Class: CD Exterior: Pole (Unfinished)					
Base Cost			832	19,519	9,955
			Totals:	111,854	57,046

Notes:
ECF (RESIDENTIAL) 1.297 => TCV: 73,989

*** Information herein deemed reliable but not guaranteed***

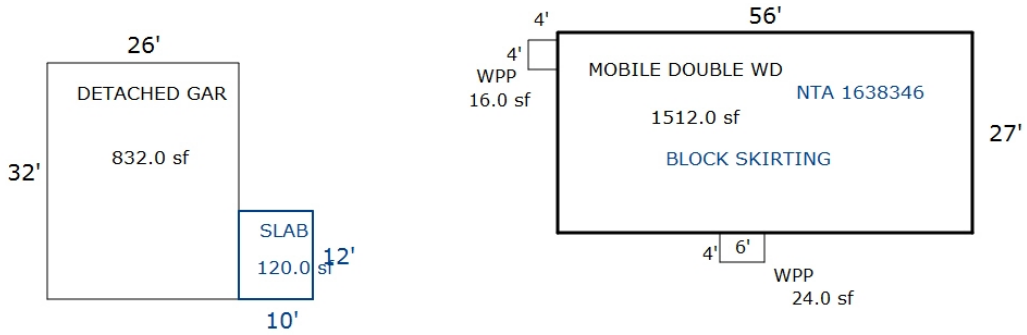

Sketch by Apex Sketch

*** Information herein deemed reliable but not guaranteed***

Parcel Number: 2410-10-2101 Jurisdiction: GREENWOOD TWP County: WEXFORD Printed on 02/15/2024

Grantor	Grantee	Sale Price	Sale Date	Inst. Type	Terms of Sale	Liber & Page	Verified By	Prcnt. Trans.

Property Address	Class: AGRICULTURAL-VACAN	Zoning:	Building Permit(s)	Date	Number	Status
	School: KINGSLEY AREA SCHOOL					
Owner's Name/Address	P.R.E. 100% / /					
MICHIGAN DEPT OF P O BOX 30735 GRANTS ADMINISTRATION LANSING MI 48909-8235	:					
	2024 Est TCV 35,784					

Tax Description

E 1/2 OF NW 1/4 LYING NORTH OF MANISTEE RIVER --7 A. M/L-- GW. SEC. 10 T24N R10W -KINGSLEY- SEE ACT 513 ROLL FOR VALUE

Comments/Influences

	Improved	X	Vacant

	Public Improvements
X	Dirt Road
X	Gravel Road
	Paved Road
	Storm Sewer
	Sidewalk
	Water
	Sewer
X	Electric
	Gas
	Curb
	Street Lights
	Standard Utilities
	Underground Utils.

	Topography of Site
X	Level
X	Rolling
X	Low
X	High
	Landscaped
	Swamp
X	Wooded
	Pond
	Waterfront
	Ravine
	Wetland
	Flood Plain
X	OPEN/PINES

Who	When	What
GLA	05/05/2016	INSPECTION

Land Value Estimates for Land Table 4010.LAND VALUES

Description	Frontage	Depth	* Factors * Front	Depth	Rate	%Adj.	Reason	Value
ACREAGE			7.000 Acres		5,112	100		35,784
			7.00 Total Acres		Total Est. Land Value =			35,784

Year	Land Value	Building Value	Assessed Value	Board of Review	Tribunal/ Other	Taxable Value
2024	17,900	0	17,900			10,821C
2023	11,900	0	11,900			10,306C
2022	10,500	0	10,500			9,816C
2021	11,900	0	11,900			9,503C

The Equalizer. Copyright (c) 1999 - 2009. Licensed To: Township of Greenwood, County of Wexford, Michigan

*** Information herein deemed reliable but not guaranteed***

Parcel Number: 2410-10-2202 Jurisdiction: GREENWOOD TWP County: WEXFORD Printed on 02/15/2024

Grantor	Grantee	Sale Price	Sale Date	Inst. Type	Terms of Sale	Liber & Page	Verified By	Prcnt. Trans.
RONAN, MICHAEL P & PEGGY A	RONAN, MICHAEL P & PEGGY A	0	06/20/2017	WD	18-LIFE ESTATE	680/2062	DEED	0.0
PARKS, LINDA SUC RONAN, WI	RONAN, MICHAEL P & PEGGY A	42,000	12/08/2014	OTH	08-ESTATE	673/925	DEED	0.0
RONAN, WILLIAM P. SURV OF	RONAN, WILLIAM P LE TRUST	0	04/03/2014	WD	18-LIFE ESTATE	667/766	DEED	0.0

Property Address

10976 N 29 1/2 RD

Owner's Name/Address

RONAN, MICHAEL P & PEGGY A LE
11155 RAMBLING WAY
STANWOOD MI 49346

Tax Description

THAT PART OF W 1/2 OF NW 1/4 LYING N OF MANISTEE RIVER --2.60 A M/L-- GW. SEC. 10 T24N R10W -KINGSLEY-

Comments/Influences

The Equalizer. Copyright (c) 1999 - 2009. Licensed To: Township of Greenwood, County of Wexford, Michigan

Class: RESIDENTIAL-IMPROV Zoning:

School: KINGSLEY AREA SCHOOL

P.R.E. 0%

:

2024 Est TCV 162,586 TCV/TFA: 193.55

Building Permit(s)	Date	Number	Status

X Improved | Vacant

	Public Improvements
X	Dirt Road
X	Gravel Road
	Paved Road
	Storm Sewer
	Sidewalk
	Water
	Sewer
X	Electric
	Gas
	Curb
	Street Lights
	Standard Utilities
	Underground Utils.

	Topography of Site
X	Level
X	Rolling
X	Low
X	High
	Landscaped
	Swamp
X	Wooded
	Pond
	Waterfront
	Ravine
	Wetland
	Flood Plain
X	OPEN/PINES

Who	When	What
GLA	05/13/2021	INSPECTION
GLA	08/01/2014	INSPECTION
GLA	05/05/2016	INSPECTION

Land Value Estimates for Land Table 4010.LAND VALUES

Description	Frontage	Depth	* Factors * Front	Depth	Rate	%Adj.	Reason	Value
MAN -RIVER LOW	320.00	0.00	1.0000	1.0000	315	100		100,800
320 Actual Front Feet, 0.00 Total Acres							Total Est. Land Value =	100,800

Land Improvement Cost Estimates

Description	Rate	Size	% Good	Cash Value
Wood Frame	28.00	64	44	788
Wood Frame	19.19	260	44	2,195
Total Estimated Land Improvements True Cash Value =				2,983

Year	Land Value	Building Value	Assessed Value	Board of Review	Tribunal/ Other	Taxable Value
2024	50,400	30,900	81,300			17,276C
2023	47,400	25,000	72,400			16,454C
2022	43,200	21,000	64,200			15,671C
2021	32,000	20,900	52,900			15,171C

*** Information herein deemed reliable but not guaranteed***

Building Type

X	Single Family
	Mobile Home
	Town Home
	Duplex
	A-Frame
X	Wood Frame

Building Style: PLAIN

Yr Built	Remodeled
0	0

Condition: Good

Room List

	Basement
	1st Floor
	2nd Floor
	Bedrooms

(1) Exterior

X	Wood/Shingle
	Aluminum/Vinyl
	Brick
X	Insulation

(2) Windows

	Many		Large
X	Avg.	X	Avg.
	Few		Small

X	Wood Sash
	Metal Sash
	Vinyl Sash
	Double Hung
	Horiz. Slide
	Casement
	Double Glass
	Patio Doors
X	Storms & Screens

(3) Roof

X	Gable		Gambrel
	Hip		Mansard
	Flat		Shed

X	Asphalt Shingle

Chimney:

(3) Roof (cont.)

	Eavestrough
X	Insulation
0	Front Overhang
0	Other Overhang

(4) Interior

X	Drywall		Plaster
	Paneled		Wood T&G

Trim & Decoration

	Ex	X	Ord		Min

Size of Closets

	Lg	X	Ord		Small

Doors:		Solid	X	H.C.	

(5) Floors

Kitchen:
Other: Linoleum
Other: Carpeted

(6) Ceilings

X	Drywall

(7) Excavation

Basement: 0 S.F.
Crawl: 672 S.F.
Slab: 0 S.F.
Height to Joists: 0.0

(8) Basement

	Conc. Block
	Poured Conc.
	Stone
	Treated Wood
	Concrete Floor

(9) Basement Finish

	Recreation SF
	Living SF
	Walkout Doors (B)
	No Floor SF
	Walkout Doors (A)

(10) Floor Support

Joists:
Unsupported Len:
Cntr.Sup:

(11) Heating/Cooling

X	Gas		Oil		Elec.
	Wood		Coal		Steam

	Forced Air w/o Ducts
X	Forced Air w/ Ducts
	Forced Hot Water
	Electric Baseboard
	Elec. Ceil. Radiant
	Radiant (in-floor)
	Electric Wall Heat
	Space Heater
	Wall/Floor Furnace
	Forced Heat & Cool
	Heat Pump
	No Heating/Cooling

	Central Air
	Wood Furnace

(12) Electric

150	Amps Service

No./Qual. of Fixtures

	Ex.	X	Ord.		Min

No. of Elec. Outlets

	Many	X	Ave.		Few

(13) Plumbing

1	Average Fixture(s)
	3 Fixture Bath
	2 Fixture Bath
	Softener, Auto
	Softener, Manual
	Solar Water Heat
	No Plumbing
	Extra Toilet
	Extra Sink
	Separate Shower
	Ceramic Tile Floor
	Ceramic Tile Wains
	Ceramic Tub Alcove
	Vent Fan

(14) Water/Sewer

	Public Water
	Public Sewer
1	Water Well
	1000 Gal Septic
	2000 Gal Septic

Lump Sum Items:

(15) Built-ins

	Appliance Allow.
	Cook Top
	Dishwasher
	Garbage Disposal
	Bath Heater
	Vent Fan
	Hot Tub
	Unvented Hood
	Vented Hood
	Intercom
	Jacuzzi Tub
	Jacuzzi repl.Tub
	Oven
	Microwave
	Standard Range
	Self Clean Range
	Sauna
	Trash Compactor
	Central Vacuum
	Security System

(15) Fireplaces

	Interior 1 Story
	Interior 2 Story
	2nd/Same Stack
	Two Sided
	Exterior 1 Story
	Exterior 2 Story
	Prefab 1 Story
	Prefab 2 Story
	Heat Circulator
	Raised Hearth
	Wood Stove
	Direct-Vented Gas

Class: D
Effec. Age: 65
Floor Area: 840
Total Base New : 100,752 E.C.F.
Total Depr Cost: 45,338 X 1.297
Estimated T.C.V: 58,803

(16) Porches/Decks

Area	Type
48	WPP
128	Treated Wood

(17) Garage

Year Built:
Car Capacity:
Class:
Exterior:
Brick Ven.:
Stone Ven.:
Common Wall:
Foundation:
Finished ?:
Auto. Doors:
Mech. Doors:
Area:
% Good:
Storage Area:
No Conc. Floor:

Bsmnt Garage:

Carport Area:
Roof:

Cost Est. for Res. Bldg: 1 Single Family PLAIN Cls D Blt 0
(11) Heating System: Forced Air w/ Ducts
Ground Area = 672 SF Floor Area = 840 SF.
Phy/Ab.Phy/Func/Econ/Comb. % Good=45/100/100/100/45
Building Areas

Stories	Exterior	Foundation	Size	Cost New	Depr. Cost
1.25 Story	Siding	Crawl Space	672		
			Total:	90,576	40,759
Other Additions/Adjustments					
Porches					
WPP			48	1,655	745
Deck					
Treated Wood			128	2,976	1,339
Water/Sewer					
Water Well, 100 Feet			1	5,545	2,495
			Totals:	100,752	45,338

Notes:

ECF (RESIDENTIAL) 1.297 => TCV: 58,803

*** Information herein deemed reliable but not guaranteed***

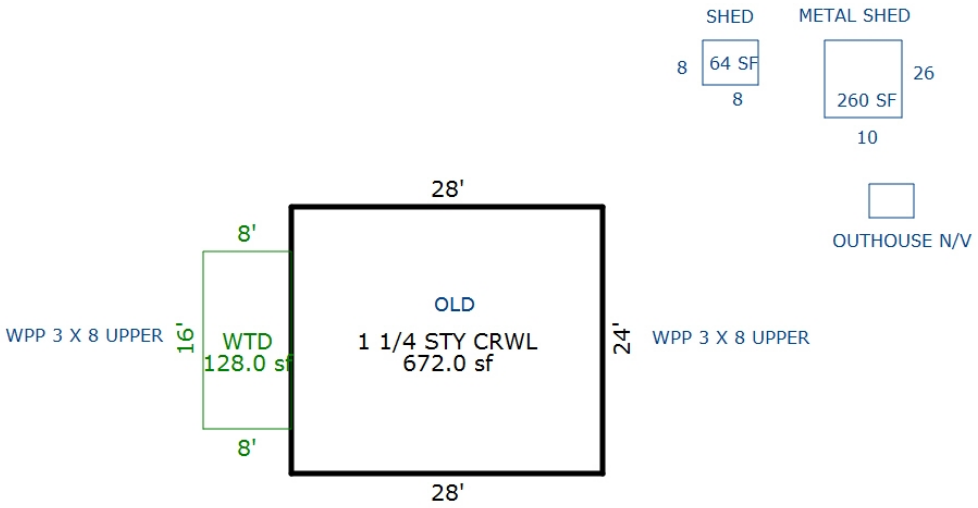

Sketch by Apex Sketch

*** Information herein deemed reliable but not guaranteed***

Parcel Number: 2410-10-2203 Jurisdiction: GREENWOOD TWP County: WEXFORD Printed on 02/15/2024

Grantor	Grantee	Sale Price	Sale Date	Inst. Type	Terms of Sale	Liber & Page	Verified By	Prcnt. Trans.
EGELER-BREMER, ANGELA	MOLESKY, PAUL JR	30,000	12/10/2020	WD	03-ARM'S LENGTH	688/2609	AGENT	100.0
BREMER, JAMES M	EGELER-BREMER, ANGELA	0	06/13/2016	QC	06-COURT JUDGEMENT	6781/95	DEED	0.0
SALMON, DONALD & SHIRLEY	BREMER, JAMES M	0	11/07/2007	OTH	21-NOT USED/OTHER	606/1138	DEED	0.0
BREMER, JAMES M	SLAMON, DONALD & SHIRLEY	77,500	07/15/2003	LC	03-ARM'S LENGTH	514:203	DEED	0.0

Property Address

Owner's Name/Address

MOLESKY, PAUL JR
2384 ROCKY RIVER OVAL
ROCKY RIVER OH 44116

Tax Description

COM 1827.78 FT N OF SW COR OF NW 1/4: TH N 58D19' E 261.75 FT; N 89D27' E 162.44 FT; N 3D44' W 185.53 FT; N 30D 57' W 103 FT M/L TO MANISTEE RIVER; SW'LY ALONG RIVER TO W SEC LINE; S 103 FT M/L TO BEG. --1.24 A M/L-- GW. SEC. 10 T24N R10W -MANTON-

Comments/Influences

The Equalizer. Copyright (c) 1999 - 2009. Licensed To: Township of Greenwood, County of Wexford, Michigan

Class: RESIDENTIAL-IMPROV Zoning:

School: MANTON CONSOLIDATED SCHOOLS

P.R.E. 0%

:

2024 Est TCV 48,296 TCV/TFA: 0.00

Building Permit(s)	Date	Number	Status

X	Improved		Vacant

	Public Improvements
X	Dirt Road
	Gravel Road
	Paved Road
	Storm Sewer
	Sidewalk
	Water
	Sewer
	Electric
	Gas
	Curb
	Street Lights
	Standard Utilities
	Underground Utils.

	Topography of Site
X	Level
X	Rolling
	Low
	High
	Landscaped
	Swamp
X	Wooded
	Pond
	Waterfront
	Ravine
	Wetland
	Flood Plain
X	OPEN/PINES

Who	When	What
GLA	05/05/2016	INSPECTION

Land Value Estimates for Land Table 4010.LAND VALUES

Description	Frontage	Depth	* Factors * Front	Depth	Rate	%Adj.	Reason	Value
MAN -RIVER LOW	150.00	0.00	1.0000	1.0000	315	100		47,250
150 Actual Front Feet, 0.00 Total Acres							Total Est. Land Value =	47,250

Land Improvement Cost Estimates

Description	Rate	Size	% Good	Cash Value
Wood Frame	22.08	128	37	1,046
Total Estimated Land Improvements True Cash Value =				1,046

Year	Land Value	Building Value	Assessed Value	Board of Review	Tribunal/ Other	Taxable Value
2024	23,600	500	24,100			17,538C
2023	22,200	500	22,700			16,703C
2022	20,300	400	20,700			15,908C
2021	15,000	400	15,400			15,400S

*** Information herein deemed reliable but not guaranteed***

Building Type

X	Single Family
	Mobile Home
	Town Home
	Duplex
	A-Frame
X	Wood Frame

Building Style: PLAIN

Yr Built	Remodeled
0	0

Condition: Fair

Room List

	Basement
	1st Floor
	2nd Floor
	Bedrooms

(1) Exterior

X	Wood/Shingle
	Aluminum/Vinyl
	Brick
X	Insulation

(2) Windows

X	Many		Large
	Avg.	X	Avg.
	Few		Small

	Wood Sash
	Metal Sash
X	Vinyl Sash
	Double Hung
	Horiz. Slide
	Casement
	Double Glass
	Patio Doors
X	Storms & Screens

(3) Roof

X	Gable		Gambrel
	Hip		Mansard
	Flat		Shed
X	Asphalt Shingle		

Chimney:

(3) Roof (cont.)

	Eavestrough
X	Insulation
0	Front Overhang
0	Other Overhang

(4) Interior

X	Drywall		Plaster
	Paneled		Wood T&G

Trim & Decoration

	Ex	X	Ord		Min

Size of Closets

	Lg	X	Ord		Small

Doors:		Solid	X	H.C.	

(5) Floors

Kitchen:
Other: Linoleum
Other: Carpeted

(6) Ceilings

X	Drywall		

(7) Excavation

Basement: 0 S.F.
Crawl: 0 S.F.
Slab: 0 S.F.
Height to Joists: 0.0

(8) Basement

	Conc. Block
	Poured Conc.
	Stone
	Treated Wood
	Concrete Floor

(9) Basement Finish

	Recreation SF
	Living SF
	Walkout Doors (B)
	No Floor SF
	Walkout Doors (A)

(10) Floor Support

Joists:
Unsupported Len:
Cntr.Sup:

(11) Heating/Cooling

X	Gas		Oil		Elec.
	Wood		Coal		Steam

	Forced Air w/o Ducts
X	Forced Air w/ Ducts
	Forced Hot Water
	Electric Baseboard
	Elec. Ceil. Radiant
	Radiant (in-floor)
	Electric Wall Heat
	Space Heater
	Wall/Floor Furnace
	Forced Heat & Cool
	Heat Pump
	No Heating/Cooling
	Central Air
	Wood Furnace

(12) Electric

150	Amps Service

No./Qual. of Fixtures

	Ex.	X	Ord.		Min

No. of Elec. Outlets

	Many	X	Ave.		Few

(13) Plumbing

1	Average Fixture(s)
	3 Fixture Bath
	2 Fixture Bath
	Softener, Auto
	Softener, Manual
	Solar Water Heat
	No Plumbing
	Extra Toilet
	Extra Sink
	Separate Shower
	Ceramic Tile Floor
	Ceramic Tile Wains
	Ceramic Tub Alcove
	Vent Fan

(14) Water/Sewer

	Public Water
	Public Sewer
	Water Well
	1000 Gal Septic
	2000 Gal Septic

Lump Sum Items:

(15) Built-ins

	Appliance Allow.
	Cook Top
	Dishwasher
	Garbage Disposal
	Bath Heater
	Vent Fan
	Hot Tub
	Unvented Hood
	Vented Hood
	Intercom
	Jacuzzi Tub
	Jacuzzi repl.Tub
	Oven
	Microwave
	Standard Range
	Self Clean Range
	Sauna
	Trash Compactor
	Central Vacuum
	Security System

(15) Fireplaces

	Interior 1 Story
	Interior 2 Story
	2nd/Same Stack
	Two Sided
	Exterior 1 Story
	Exterior 2 Story
	Prefab 1 Story
	Prefab 2 Story
	Heat Circulator
	Raised Hearth
	Wood Stove
	Direct-Vented Gas

Class: D
Effec. Age: 58
Floor Area: 0
Total Base New : 0 E.C.F.
Total Depr Cost: 0 X 1.297
Estimated T.C.V: 0

(16) Porches/Decks

Area	Type

(17) Garage

Year Built:
Car Capacity:
Class:
Exterior:
Brick Ven.:
Stone Ven.:
Common Wall:
Foundation:
Finished ?:
Auto. Doors:
Mech. Doors:
Area:
% Good:
Storage Area:
No Conc. Floor:

Bsmnt Garage:

Carport Area:
Roof:

Cost Est. for Res. Bldg: 1 Single Family PLAIN Cls D Blt 0
(11) Heating System: Forced Air w/ Ducts
Ground Area = 0 SF Floor Area = 0 SF.
Phy/Ab.Phy/Func/Econ/Comb. % Good=45/100/100/100/45
Building Areas

Stories	Exterior	Foundation	Size	Cost New	Depr. Cost

Other Additions/Adjustments

Totals: 0 0

Notes:

ECF (RESIDENTIAL) 1.297 => TCV: 0

*** Information herein deemed reliable but not guaranteed***

*** Information herein deemed reliable but not guaranteed***

Parcel Number: 2410-10-3101 Jurisdiction: GREENWOOD TWP County: WEXFORD Printed on 02/15/2024

Grantor	Grantee	Sale Price	Sale Date	Inst. Type	Terms of Sale	Liber & Page	Verified By	Prcnt. Trans.
OSTEOPATHIC SURGEONS 11%	BACCHUS, JR. WM.	12,000	09/01/1986	LC	03-ARM'S LENGTH	303:923	DEED	0.0

Property Address

Owner's Name/Address

WROBEL, JOSEPH
C/O VLADIMIR JAVANOVSKI
46568 APPLE LANE
MACOMB MI 48044

Tax Description

N 1/2 OF N 1/2 OF SW 1/4 40 A. GW. SEC. 10 T24N R10W -MANTON-

Comments/Influences

The Equalizer. Copyright (c) 1999 - 2009. Licensed To: Township of Greenwood, County of Wexford, Michigan

Class: RESIDENTIAL-VACANT Zoning:

School: MANTON CONSOLIDATED SCHOOLS

P.R.E. 0%

:

2024 Est TCV 108,336

Building Permit(s)	Date	Number	Status

	Improved	X	Vacant

	Public Improvements
	Dirt Road
X	Gravel Road
X	Paved Road
	Storm Sewer
	Sidewalk
	Water
	Sewer
X	Electric
	Gas
	Curb
	Street Lights
	Standard Utilities
	Underground Utils.

	Topography of Site
X	Level
X	Rolling
X	Low
X	High
	Landscaped
	Swamp
X	Wooded
	Pond
	Waterfront
	Ravine
	Wetland
	Flood Plain
X	OPEN/PINES

Who	When	What
GLA	05/05/2016	INSPECTION

Land Value Estimates for Land Table 4010.LAND VALUES

Description	Frontage	Depth	* Factors * Front	Depth	Rate	%Adj.	Reason	Value
	660.00	0.00	1.0000	1.0000	0	100		0
ACREAGE			39.800 Acres		2,722	100		108,336
			0.200 Acres		0	100		0
660 Actual Front Feet, 40.00 Total Acres					Total Est. Land Value =			108,336

Year	Land Value	Building Value	Assessed Value	Board of Review	Tribunal/ Other	Taxable Value
2024	54,200	0	54,200			19,744C
2023	47,800	0	47,800			18,804C
2022	40,500	0	40,500			17,909C
2021	36,500	0	36,500			17,337C

*** Information herein deemed reliable but not guaranteed***

Parcel Number: 2410-10-3102 Jurisdiction: GREENWOOD TWP County: WEXFORD Printed on 02/15/2024

Grantor	Grantee	Sale Price	Sale Date	Inst. Type	Terms of Sale	Liber & Page	Verified By	Prcnt. Trans.

Property Address

Owner's Name/Address

BAUER, JOHN E.
& EVA
6520 OLE WHITE DR
LAKE ANN MI 49650-9656

Tax Description

S 1/2 OF N 1/2 OF SW 1/4 40 A. GW. SEC. 10 T24N R10W -MANTON-

Comments/Influences

The Equalizer. Copyright (c) 1999 - 2009. Licensed To: Township of Greenwood, County of Wexford, Michigan

Class: RESIDENTIAL-IMPROV Zoning:

School: MANTON CONSOLIDATED SCHOOLS

P.R.E. 0%

:

2024 Est TCV 165,437 TCV/TFA: 253.74

Building Permit(s)	Date	Number	Status

X Improved | Vacant

	Public Improvements
	Dirt Road
	Gravel Road
X	Paved Road
	Storm Sewer
	Sidewalk
	Water
	Sewer
X	Electric
	Gas
	Curb
	Street Lights
	Standard Utilities
	Underground Utils.

	Topography of Site
X	Level
X	Rolling
X	Low
	High
	Landscaped
	Swamp
X	Wooded
	Pond
	Waterfront
	Ravine
	Wetland
	Flood Plain

Who	When	What
GLA	05/05/2016	INSPECTION

Land Value Estimates for Land Table 4010.LAND VALUES

Description	Frontage	Depth	* Factors * Front	Depth	Rate	%Adj.	Reason	Value
	660.00	0.00	1.0000	1.0000	0	100		0
ACREAGE			38.840 Acres		2,722	100		105,722
ROW			0.490 Acres		0	100		0

660 Actual Front Feet, 39.33 Total Acres Total Est. Land Value = 105,722

Land Improvement Cost Estimates

Description	Rate	Size	% Good	Cash Value
Wood Frame	31.05	42	35	456

Total Estimated Land Improvements True Cash Value = 456

Year	Land Value	Building Value	Assessed Value	Board of Review	Tribunal/ Other	Taxable Value
2024	52,900	29,800	82,700			30,574C
2023	46,800	24,000	70,800			29,119C
2022	39,900	20,000	59,900			27,733C
2021	35,800	20,000	55,800			26,848C

*** Information herein deemed reliable but not guaranteed***

Building Type

X	Single Family
	Mobile Home
	Town Home
	Duplex
	A-Frame
X	Wood Frame

Building Style: PLAIN

Yr Built	Remodeled
0	0

Condition: Good

Room List

	Basement
	1st Floor
	2nd Floor
	Bedrooms

(1) Exterior

X	Wood/Shingle
	Aluminum/Vinyl
	Brick
X	Insulation

(2) Windows

	Many		Large
X	Avg.	X	Avg.
	Few		Small

X	Wood Sash
	Metal Sash
	Vinyl Sash
	Double Hung
	Horiz. Slide
	Casement
	Double Glass
	Patio Doors
X	Storms & Screens

(3) Roof

X	Gable		Gambrel
	Hip		Mansard
	Flat		Shed

X	Asphalt Shingle

Chimney:

(3) Roof (cont.)

	Eavestrough
X	Insulation
0	Front Overhang
0	Other Overhang

(4) Interior

X	Drywall		Plaster
	Paneled		Wood T&G

Trim & Decoration

	Ex	X	Ord		Min

Size of Closets

	Lg	X	Ord		Small

Doors:		Solid	X	H.C.	

(5) Floors

Kitchen:
Other: Linoleum
Other: Carpeted

(6) Ceilings

X	Drywall

(7) Excavation

Basement: 0 S.F.
Crawl: 652 S.F.
Slab: 0 S.F.
Height to Joists: 0.0

(8) Basement

	Conc. Block
	Poured Conc.
	Stone
	Treated Wood
	Concrete Floor

(9) Basement Finish

	Recreation SF
	Living SF
	Walkout Doors (B)
	No Floor SF
	Walkout Doors (A)

(10) Floor Support

Joists:
Unsupported Len:
Cntr.Sup:

(11) Heating/Cooling

X	Gas		Oil		Elec.
	Wood		Coal		Steam

	Forced Air w/o Ducts
X	Forced Air w/ Ducts
	Forced Hot Water
	Electric Baseboard
	Elec. Ceil. Radiant
	Radiant (in-floor)
	Electric Wall Heat
	Space Heater
	Wall/Floor Furnace
	Forced Heat & Cool
	Heat Pump
	No Heating/Cooling

	Central Air
	Wood Furnace

(12) Electric

100	Amps Service

No./Qual. of Fixtures

	Ex.	X	Ord.		Min

No. of Elec. Outlets

	Many	X	Ave.		Few

(13) Plumbing

1	Average Fixture(s)
	3 Fixture Bath
	2 Fixture Bath
	Softener, Auto
	Softener, Manual
	Solar Water Heat
	No Plumbing
	Extra Toilet
	Extra Sink
	Separate Shower
	Ceramic Tile Floor
	Ceramic Tile Wains
	Ceramic Tub Alcove
	Vent Fan

(14) Water/Sewer

	Public Water
	Public Sewer
1	Water Well
	1000 Gal Septic
	2000 Gal Septic

Lump Sum Items:

(15) Built-ins

	Appliance Allow.
	Cook Top
	Dishwasher
	Garbage Disposal
	Bath Heater
	Vent Fan
	Hot Tub
	Unvented Hood
	Vented Hood
	Intercom
	Jacuzzi Tub
	Jacuzzi repl.Tub
	Oven
	Microwave
	Standard Range
	Self Clean Range
	Sauna
	Trash Compactor
	Central Vacuum
	Security System

(15) Fireplaces

	Interior 1 Story
	Interior 2 Story
	2nd/Same Stack
	Two Sided
	Exterior 1 Story
	Exterior 2 Story
	Prefab 1 Story
	Prefab 2 Story
	Heat Circulator
	Raised Hearth
	Wood Stove
	Direct-Vented Gas

Class: D
Effec. Age: 65
Floor Area: 652
Total Base New : 101,534 E.C.F.
Total Depr Cost: 45,689 X 1.297
Estimated T.C.V: 59,259

(16) Porches/Decks

Area	Type
80	WSEP (1 Story)
72	WGEP (1 Story)
32	WPP
318	Treated Wood
32	Treated Wood

(17) Garage

Year Built:
Car Capacity:
Class:
Exterior:
Brick Ven.:
Stone Ven.:
Common Wall:
Foundation:
Finished ?:
Auto. Doors:
Mech. Doors:
Area:
% Good:
Storage Area:
No Conc. Floor:

Bsmnt Garage:

Carport Area:
Roof:

Cost Est. for Res. Bldg: 1 Single Family PLAIN Cls D Blt 0
(11) Heating System: Forced Air w/ Ducts
Ground Area = 652 SF Floor Area = 652 SF.
Phy/Ab.Phy/Func/Econ/Comb. % Good=45/100/100/100/45
Building Areas

Stories	Exterior	Foundation	Size	Cost New	Depr. Cost
1 Story	Siding	Crawl Space	652		
			Total:	77,105	34,696
Other Additions/Adjustments					
Porches					
WSEP (1 Story)			80	4,128	1,858
WGEP (1 Story)			72	6,572	2,957
WPP			32	1,424	641
Deck					
Treated Wood			318	5,403	2,431
Treated Wood			32	1,357	611
Water/Sewer					
Water Well, 100 Feet			1	5,545	2,495
			Totals:	101,534	45,689

Notes:
ECF (RESIDENTIAL) 1.297 => TCV: 59,259

*** Information herein deemed reliable but not guaranteed***

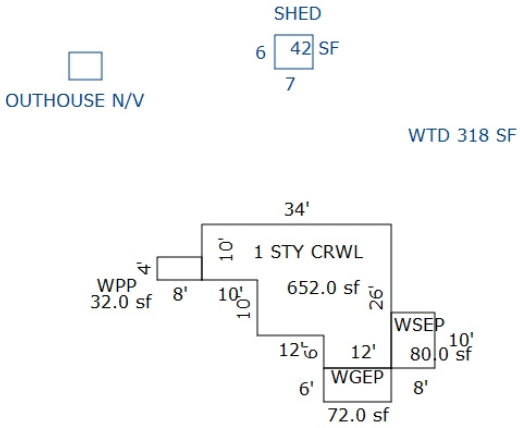

Sketch by Apex Sketch

*** Information herein deemed reliable but not guaranteed***

Parcel Number: 2410-10-3301 Jurisdiction: GREENWOOD TWP County: WEXFORD Printed on 02/15/2024

Grantor	Grantee	Sale Price	Sale Date	Inst. Type	Terms of Sale	Liber & Page	Verified By	Prcnt. Trans.

Property Address	Class: AGRICULTURAL-VACAN	Zoning:	Building Permit(s)	Date	Number	Status
	School: MANTON CONSOLIDATED SCHOOLS					
	P.R.E. 100% / /					
Owner's Name/Address	:					
MICHIGAN DEPT OF P O BOX 30735 GRANTS ADMINISTRATION LANSING MI 48909-8235	2024 Est TCV 753,920					

Improved | X | Vacant

Land Value Estimates for Land Table 4010.LAND VALUES

Description	Frontage	Depth	* Factors * Front	Depth	Rate	%Adj.	Reason	Value
ACREAGE			304.000 Acres		2,480	100		753,920
			304.00 Total Acres		Total Est. Land Value =			753,920

Public Improvements

	Dirt Road
X	Gravel Road
	Paved Road
	Storm Sewer
	Sidewalk
	Water
	Sewer
X	Electric
	Gas
	Curb
	Street Lights
	Standard Utilities
	Underground Utils.

Topography of Site

X	Level
	Rolling
	Low
X	High
	Landscaped
	Swamp
X	Wooded
	Pond
	Waterfront
	Ravine
	Wetland
	Flood Plain
X	OPEN/PINES

Year	Land Value	Building Value	Assessed Value	Board of Review	Tribunal/ Other	Taxable Value
2024	377,000	0	377,000			152,233C
2023	288,800	0	288,800			144,984C
2022	258,400	0	258,400			138,080C
2021	228,000	0	228,000			133,669C

Tax Description

NW 1/4 LYING S OF MANISTEE RIVER EXC COM 1827.78 FT N OF W 1/4 POST; N 58D19' E 261.75 FT; N 89D27' E 162.44 FT; N 3D44' W 185.53 FT; N 30D57' W 103 FT TO RIVER; SW'LY ALONG RIVER TO W LINE; S 103 FT TO POB. ALSO S 1/2 OF SW 1/4 & NE 1/4 OF SE 1/4 & SW 1/4 OF SE 1/4 -- 304 A. M/L-- GW. SEC. 10 T24N R10W -MANTON- SEE ACT 513 ROLL FOR VALUE

Comments/Influences

Who	When	What
GLA	05/05/2016	INSPECTION

The Equalizer. Copyright (c) 1999 - 2009. Licensed To: Township of Greenwood, County of Wexford, Michigan

*** Information herein deemed reliable but not guaranteed***

Parcel Number: 2410-10-4201 Jurisdiction: GREENWOOD TWP County: WEXFORD Printed on 02/15/2024

Grantor	Grantee	Sale Price	Sale Date	Inst. Type	Terms of Sale	Liber & Page	Verified By	Prcnt. Trans.
STATE OF MICHIGAN	WEXFORD CO RD COMMISSION	300	12/18/2002	QC	09-FAMILY	460:522	DEED	0.0
STATE OF MICHIGAN	WEXFORD CO ROAD COMISSION	300	08/27/2002	QC	09-FAMILY	449:712	DEED	0.0

Property Address

Owner's Name/Address

STATE OF MICHIGAN
P O BOX 30735
GRANTS ADMINISTRATION
LANSING MI 48909-8235

Tax Description

NW 1/4 OF SE 1/4 & SE 1/4 OF SE 1/4 80 A SUB TO EASMT L460 P522 GW. SEC. 10 T24N R10W -MANTON-

Comments/Influences

The Equalizer. Copyright (c) 1999 - 2009. Licensed To: Township of Greenwood, County of Wexford, Michigan

Class: AGRICULTURAL-VACAN Zoning:

School: MANTON CONSOLIDATED SCHOOLS

P.R.E. 0%

:

2024 Est TCV 0

Building Permit(s)	Date	Number	Status

	Improved	X	Vacant

	Public Improvements
	Dirt Road
X	Gravel Road
	Paved Road
	Storm Sewer
	Sidewalk
	Water
	Sewer
X	Electric
	Gas
	Curb
	Street Lights
	Standard Utilities
	Underground Utils.

	Topography of Site
X	Level
	Rolling
	Low
X	High
	Landscaped
	Swamp
X	Wooded
	Pond
	Waterfront
	Ravine
	Wetland
	Flood Plain
X	OPEN/PINES

Who	When	What
GLA	05/05/2016	INSPECTION

Land Value Estimates for Land Table 4010.LAND VALUES

Description	Frontage	Depth	* Factors * Front	Depth	Rate	%Adj.	Reason	Value
ACREAGE			80.000 Acres		2,541	100		203,240
			80.00 Total Acres		Total Est. Land Value =			203,240

Year	Land Value	Building Value	Assessed Value	Board of Review	Tribunal/ Other	Taxable Value
2024	EXEMPT	EXEMPT	EXEMPT			EXEMPT
2023	EXEMPT	EXEMPT	EXEMPT			EXEMPT
2022	0	0	0			0
2021	0	0	0			0

*** Information herein deemed reliable but not guaranteed***

Parcel Number: 2410-11-1101 Jurisdiction: GREENWOOD TWP County: WEXFORD Printed on 02/15/2024

Grantor	Grantee	Sale Price	Sale Date	Inst. Type	Terms of Sale	Liber & Page	Verified By	Prcnt. Trans.

Property Address	Class: AGRICULTURAL-VACAN	Zoning:	Building Permit(s)	Date	Number	Status
	School: MANTON CONSOLIDATED SCHOOLS					
Owner's Name/Address	P.R.E. 100% / /					
MICHIGAN DEPT OF P O BOX 30735 GRANTS ADMINISTRATION LANSING MI 48909-8235	:					
	2024 Est TCV 156,287					

Improved | X | Vacant

Public Improvements

Dirt Road
Gravel Road
Paved Road
Storm Sewer
Sidewalk
Water
Sewer
Electric
Gas
Curb
Street Lights
Standard Utilities
Underground Utils.

Topography of Site

Level
Rolling
Low
High
Landscaped
Swamp
Wooded
Pond
Waterfront
Ravine
Wetland
Flood Plain

Who When What

GLA 09/05/2016 INSPECTION

Land Value Estimates for Land Table 4010.LAND VALUES

Description	Frontage	Depth	* Factors * Front	Depth	Rate	%Adj.	Reason	Value
ACREAGE			59.020 Acres		2,648	100		156,287
			59.02 Total Acres			Total Est. Land Value =		156,287

Tax Description

ENTIRE SECTION EXC THAT PART OF W 1/2 LYING W'LY OF CENTER THREAD OF MANISTEE RIVER & EXC SE 1/4 OF SE 1/4 59.02 A M/L-- GW. SEC. 11 T24N R10W -MANTON- SEE ACT 513 ROLL FOR VALUE

Comments/Influences

Year	Land Value	Building Value	Assessed Value	Board of Review	Tribunal/ Other	Taxable Value
2024	78,100	0	78,100			196,326C
2023	75,700	0	75,700			186,978S
2022	50,200	0	50,200			178,075S
2021	48,400	0	48,400			172,387S

The Equalizer. Copyright (c) 1999 - 2009. Licensed To: Township of Greenwood, County of Wexford, Michigan

*** Information herein deemed reliable but not guaranteed***

Parcel Number: 2410-11-2201 Jurisdiction: GREENWOOD TWP County: WEXFORD Printed on 02/15/2024

Grantor	Grantee	Sale Price	Sale Date	Inst. Type	Terms of Sale	Liber & Page	Verified By	Prcnt. Trans.
OLDS, RICHARD R.	OLDS AARON P & OLDS JUSTIN	0	10/29/2023	QC	21-NOT USED/OTHER		DEED	0.0
OLDS, RICHARD R.	FARQUHAR, SHARON (FKA, OLI	0	06/24/2019	PTA	21-NOT USED/OTHER		DEED	0.0
OLDS, JAMES H & SHARON	OLDS, JAMES H	0	06/24/2019	QC	06-COURT JUDGEMENT	685/899	DEED	0.0

Property Address

Class: AGRICULTURAL-VACAN Zoning:

School: KINGSLEY AREA SCHOOL

P.R.E. 100% / / Qual. Ag.

:

2024 Est TCV 431,440

Building Permit(s)	Date	Number	Status

Owner's Name/Address

OLDS AARON P & OLDS JUSTIN T
SHERMAN SARAH E & ETAL
22447 N NOTTINGHAM DR
FRANKLIN MI 48025

Tax Description

THAT PART OF W 1/2 OF SECTION LYING W'LY OF CENTER TREAD OF MANISTEE RIVER --32.11 A M/L-- GW. SEC. 11 T24N R10W -KINGSLEY-

Comments/Influences

The Equalizer. Copyright (c) 1999 - 2009. Licensed To: Township of Greenwood, County of Wexford, Michigan

	Improved	X	Vacant

	Public Improvements
	Dirt Road
	Gravel Road
	Paved Road
	Storm Sewer
	Sidewalk
	Water
	Sewer
	Electric
	Gas
	Curb
	Street Lights
	Standard Utilities
	Underground Utils.

	Topography of Site
	Level
X	Rolling
	Low
X	High
	Landscaped
	Swamp
X	Wooded
	Pond
	Waterfront
	Ravine
	Wetland
	Flood Plain

Who	When	What
GLA	05/05/2016	INSPECTION

Land Value Estimates for Land Table 1010.AG

* Factors *

Description	Frontage	Depth	Front	Depth	Rate	%Adj.	Reason	Value
RIVER LOW	1320.00	100.00	1.0000	1.0000	315	85	EXCESS FRONTAGE ON THE RIVE	
AG LAND	40 ACRES		29.00 Acres		2690	100		78,010

1320 Actual Front Feet, 32.03 Total Acres Total Est. Land Value = 431,440

Year	Land Value	Building Value	Assessed Value	Board of Review	Tribunal/ Other	Taxable Value
2024	215,700	0	215,700			24,753C
2023	195,400	0	195,400			23,575C
2022	178,200	0	178,200			22,453C
2021	132,000	0	132,000			21,736C

*** Information herein deemed reliable but not guaranteed***

Parcel Number: 2410-11-4401 Jurisdiction: GREENWOOD TWP County: WEXFORD Printed on 02/15/2024

Grantor	Grantee	Sale Price	Sale Date	Inst. Type	Terms of Sale	Liber & Page	Verified By	Prcnt. Trans.

Property Address

Owner's Name/Address

STATE OF MICHIGAN
P O BOX 30735
GRANTS ADMINISTRATION
LANSING MI 48909-8235

Tax Description

SE 1/4 OF SE 1/4 40 A. GW. SEC. 11 T24N R10W -MANTON-

Comments/Influences

The Equalizer. Copyright (c) 1999 - 2009. Licensed To: Township of Greenwood, County of Wexford, Michigan

Class: AGRICULTURAL-VACAN Zoning:

School: MANTON CONSOLIDATED SCHOOLS

P.R.E. 0%

:

2024 Est TCV 0

Building Permit(s)	Date	Number	Status

[ ] Improved [X] Vacant

Public Improvements

- [ ] Dirt Road
- [ ] Gravel Road
- [ ] Paved Road
- [ ] Storm Sewer
- [ ] Sidewalk
- [ ] Water
- [ ] Sewer
- [ ] Electric
- [ ] Gas
- [ ] Curb
- [ ] Street Lights
- [ ] Standard Utilities
- [ ] Underground Utils.

Topography of Site

- [ ] Level
- [ ] Rolling
- [ ] Low
- [ ] High
- [ ] Landscaped
- [ ] Swamp
- [ ] Wooded
- [ ] Pond
- [ ] Waterfront
- [ ] Ravine
- [ ] Wetland
- [ ] Flood Plain

Who	When	What
GLA	05/05/2016	INSPECTION

Land Value Estimates for Land Table 4010.LAND VALUES

Description	Frontage	Depth	* Factors * Front	Depth	Rate	%Adj.	Reason	Value
ACREAGE			40.000 Acres		2,722	100		108,880
			40.00 Total Acres		Total Est. Land Value =			108,880

Year	Land Value	Building Value	Assessed Value	Board of Review	Tribunal/ Other	Taxable Value
2024	EXEMPT	EXEMPT	EXEMPT			EXEMPT
2023	EXEMPT	EXEMPT	EXEMPT			EXEMPT
2022	0	0	0			0
2021	0	0	0			0

*** Information herein deemed reliable but not guaranteed***

Parcel Number: 2410-12-1101 Jurisdiction: GREENWOOD TWP County: WEXFORD Printed on 02/15/2024

Grantor	Grantee	Sale Price	Sale Date	Inst. Type	Terms of Sale	Liber & Page	Verified By	Prcnt. Trans.

Property Address

Owner's Name/Address

MICHIGAN DEPT OF
P O BOX 30735
GRANTS ADMINISTRATION
LANSING MI 48909-8235

Tax Description

ENTIRE SECTION EXC PAR COM 1319.15 FT N 88D53M16S W OF NE COR & 661.56 FT S 2D20M43S W TO POB: S 89D11M38S E 658.16 FT S 2D28M57M W 823.31 FT TO IRON ROD NEAL NLY BNK OF RVR; S 2D 28M57S W TO CENTER THREAD OF RVR; TH DOWNSTREAM ALONG RVR TO E 1/8 LINE; N 2D20M43 S E TO RION ROD NEAR NLY BNK OF RVR; N 2D20M43S E 754.15 FT TO POB & EXC PAR COM AT SE COR; N 2D40M 55S E 755.09 FT; N 89D25M46S W 658.54 FT; S 2D31M45S W 754. 79 FT; S 89D24M34S E 646.52 FT TO POB. SUB TO EASMNT 611.88 A M/L GW. SEC. 12 T24N R10W -MANTON- SEE ACT 513 ROLL FOR VALUE

Comments/Influences

The Equalizer. Copyright (c) 1999 - 2009. Licensed To: Township of Greenwood, County of Wexford, Michigan

Class: AGRICULTURAL-VACAN Zoning:

School: MANTON CONSOLIDATED SCHOOLS

P.R.E. 100% / /

:

2024 Est TCV 1,517,462

Building Permit(s)	Date	Number	Status

[ ] Improved [X] Vacant

Public Improvements

[ ] Dirt Road
[ ] Gravel Road
[ ] Paved Road
[ ] Storm Sewer
[ ] Sidewalk
[ ] Water
[ ] Sewer
[ ] Electric
[ ] Gas
[ ] Curb
[ ] Street Lights
[ ] Standard Utilities
[ ] Underground Utils.

Topography of Site

[ ] Level
[ ] Rolling
[ ] Low
[ ] High
[ ] Landscaped
[ ] Swamp
[ ] Wooded
[ ] Pond
[ ] Waterfront
[ ] Ravine
[ ] Wetland
[ ] Flood Plain

Who When What

GLA 05/05/2016 INSPECTION

Land Value Estimates for Land Table 4010.LAND VALUES

Description	Frontage	Depth	* Factors * Front	Depth	Rate	%Adj.	Reason	Value
ACREAGE			611.880 Acres		2,480	100		1,517,462
			611.88 Total Acres			Total Est. Land Value =		1,517,462

Year	Land Value	Building Value	Assessed Value	Board of Review	Tribunal/ Other	Taxable Value
2024	758,700	0	758,700			242,718C
2023	581,300	0	581,300			231,160C
2022	520,100	0	520,100			220,153C
2021	458,900	0	458,900			213,121C

*** Information herein deemed reliable but not guaranteed***

Parcel Number: 2410-12-1102 Jurisdiction: GREENWOOD TWP County: WEXFORD Printed on 02/15/2024

Grantor	Grantee	Sale Price	Sale Date	Inst. Type	Terms of Sale	Liber & Page	Verified By	Prcnt. Trans.
BOWDEN, PHILIP C & ELIZAVB	ROSS, ALDEN & ROSS PHIL JT	242,500	05/04/2016	WD	03-ARM'S LENGTH	6771/950	DEED	100.0

Property Address

10100 N 37 RD

Owner's Name/Address

ROSS, ALDEN & ROSS, PHIL JTFRS
6222 WALTON RD
KINGSLEY MI 49649

Tax Description

PAR COM 1319.15 FT N 88D53M16S W OF NE COR & 661.56 FT S 2D 20M43S W TO POB: S 89D11M38S E 658.16 FT; S 2D28M57S W 823.31 FT TO IRON ROD NEAR NLY BNK OF MANISTEE RVR; S 2D28M57S W TO CENTER THREAD OF RVR; TH DOWNSTREAM ALONG RIVER TO E 1/8 LINE; N 2D20M43S E TO IRON ROD NEAR NLY BNK OF RIVER; N 2D 20M43S E 754.15 FT TO POB. SUB TO EASMNT ACROSS SECTIONS 1,3,12 --11.3 A-- GW. SEC. 12 T24N R10W -MANTON-

Comments/Influences

The Equalizer. Copyright (c) 1999 - 2009.
Licensed To: Township of Greenwood, County of Wexford, Michigan

Class: RESIDENTIAL-IMPROV Zoning:
School: MANTON CONSOLIDATED SCHOOLS
P.R.E. 100% 06/15/2022
: 224-572-1000 ALDEN ROSS #
2024 Est TCV 380,352 TCV/TFA: 354.15

Building Permit(s)	Date	Number	Status
Pole Barn	03/30/2022	PB22-0053	ENTERED
Garage, Detached	06/20/2018	PB18-0087	ENTERED
Res. Add/Alter/Repair	06/20/2018	PB18-0088	COMPLETE

X Improved | Vacant

Public Improvements

X	Dirt Road
	Gravel Road
	Paved Road
	Storm Sewer
	Sidewalk
	Water
	Sewer
	Electric
	Gas
	Curb
	Street Lights
	Standard Utilities
	Underground Utils.

Topography of Site

	Level
X	Rolling
X	Low
X	High
	Landscaped
	Swamp
X	Wooded
	Pond
	Waterfront
	Ravine
	Wetland
	Flood Plain
X	OPEN/PINES

Who	When	What
GLA	10/31/2022	INSPECTION
GLA	06/09/2015	INSPECTION
GLA	05/03/2016	INSPECTION

Land Value Estimates for Land Table 4010.LAND VALUES

Description	Frontage	Depth	* Factors * Front	Depth	Rate	%Adj.	Reason	0 Value
MAN -RIVER LOW	658.00	0.00	1.0000	1.0000	315	100		207,270
658 Actual Front Feet, 0.00 Total Acres							Total Est. Land Value =	207,270

Land Improvement Cost Estimates

Description	Rate	Size	% Good	Cash Value
D/W/P: 3.5 Concrete	6.63	392	97	2,521
Wood Frame	28.20	120	42	1,421
Total Estimated Land Improvements True Cash Value =				3,942

Year	Land Value	Building Value	Assessed Value	Board of Review	Tribunal/ Other	Taxable Value
2024	103,600	86,600	190,200			144,427C
2023	97,400	71,100	168,500			137,550C
2022	88,800	47,600	136,400		136,400W	117,762C
2021	65,800	48,200	114,000			114,000S

*** Information herein deemed reliable but not guaranteed***

Building Type

X	Single Family
	Mobile Home
	Town Home
	Duplex
	A-Frame
X	Wood Frame

Building Style: PLAIN

Yr Built	Remodeled
1983	0

Condition: Good

Room List

	Basement
	1st Floor
	2nd Floor
	Bedrooms

(1) Exterior

X	Wood/Shingle
	Aluminum/Vinyl
	Brick
X	Insulation

(2) Windows

	Many		Large
X	Avg.	X	Avg.
	Few		Small

X	Wood Sash
	Metal Sash
	Vinyl Sash
	Double Hung
	Horiz. Slide
	Casement
	Double Glass
	Patio Doors
X	Storms & Screens

(3) Roof

X	Gable		Gambrel
	Hip		Mansard
	Flat		Shed

X	Asphalt Shingle

Chimney:

(3) Roof (cont.)

	Eavestrough
X	Insulation
0	Front Overhang
0	Other Overhang

(4) Interior

X	Drywall		Plaster
	Paneled		Wood T&G

Trim & Decoration

	Ex	X	Ord		Min

Size of Closets

	Lg	X	Ord		Small

Doors:		Solid	X	H.C.	

(5) Floors

Kitchen:
Other: Linoleum
Other: Carpeted

(6) Ceilings

X	Drywall

(7) Excavation

Basement: 0 S.F.
Crawl: 672 S.F.
Slab: 0 S.F.
Height to Joists: 0.0

(8) Basement

	Conc. Block
	Poured Conc.
	Stone
	Treated Wood
	Concrete Floor

(9) Basement Finish

	Recreation SF
	Living SF
	Walkout Doors (B)
	No Floor SF
	Walkout Doors (A)

(10) Floor Support

Joists:
Unsupported Len:
Cntr.Sup:

(11) Heating/Cooling

X	Gas		Oil		Elec.
	Wood		Coal		Steam

	Forced Air w/o Ducts
X	Forced Air w/ Ducts
	Forced Hot Water
	Electric Baseboard
	Elec. Ceil. Radiant
	Radiant (in-floor)
	Electric Wall Heat
	Space Heater
	Wall/Floor Furnace
	Forced Heat & Cool
	Heat Pump
	No Heating/Cooling

X	Central Air
	Wood Furnace

(12) Electric

150	Amps Service

No./Qual. of Fixtures

	Ex.	X	Ord.		Min

No. of Elec. Outlets

	Many	X	Ave.		Few

(13) Plumbing

1	Average Fixture(s)
	3 Fixture Bath
	2 Fixture Bath
	Softener, Auto
	Softener, Manual
	Solar Water Heat
	No Plumbing
	Extra Toilet
	Extra Sink
	Separate Shower
	Ceramic Tile Floor
	Ceramic Tile Wains
	Ceramic Tub Alcove
	Vent Fan

(14) Water/Sewer

	Public Water
	Public Sewer
1	Water Well
1	1000 Gal Septic
	2000 Gal Septic

Lump Sum Items:

(15) Built-ins

	Appliance Allow.
	Cook Top
	Dishwasher
	Garbage Disposal
	Bath Heater
	Vent Fan
	Hot Tub
	Unvented Hood
	Vented Hood
	Intercom
	Jacuzzi Tub
	Jacuzzi repl.Tub
	Oven
	Microwave
	Standard Range
	Self Clean Range
	Sauna
	Trash Compactor
	Central Vacuum
	Security System

(15) Fireplaces

	Interior 1 Story
	Interior 2 Story
	2nd/Same Stack
	Two Sided
	Exterior 1 Story
	Exterior 2 Story
	Prefab 1 Story
	Prefab 2 Story
	Heat Circulator
	Raised Hearth
	Wood Stove
	Direct-Vented Gas

Class: CD
Effec. Age: 40
Floor Area: 1,074
Total Base New : 217,583 E.C.F.
Total Depr Cost: 130,408 X 1.297
Estimated T.C.V: 169,140

(16) Porches/Decks

Area	Type
213	WPP
170	WCP (1 Story)

(17) Garage

Year Built:
Car Capacity:
Class: CD
Exterior: Pole
Brick Ven.: 0
Stone Ven.: 0
Common Wall: Detache
Foundation: 18 Inch
Finished ?:
Auto. Doors: 0
Mech. Doors: 0
Area: 1350
% Good: 0
Storage Area: 0
No Conc. Floor: 1350

Bsmnt Garage:

Carport Area:
Roof:

Cost Est. for Res. Bldg: 1 Single Family PLAIN Cls CD Blt 1983
(11) Heating System: Forced Air w/ Ducts , Air Conditioning
Ground Area = 906 SF Floor Area = 1074 SF.
Phy/Ab.Phy/Func/Econ/Comb. % Good=60/100/100/100/60
Building Areas

Stories	Exterior	Foundation	Size	Cost New	Depr. Cost	
1.25 Story	Siding	Crawl Space	672			
1 Story	Siding	Piers	234			
			Total:	131,233	78,738	
Other Additions/Adjustments						
Water/Sewer						
1000 Gal Septic			1	4,582	2,749	
Water Well, 100 Feet			1	5,680	3,408	
Porches						
WPP			213	4,198	2,519	
WCP (1 Story)			170	6,518	3,911	
Garages						
Class: CD Exterior: Pole (Unfinished)						
Base Cost			1350	29,363	17,618	
No Concrete Floor			1350	-8,303	-4,982	
Class: CD Exterior: Siding Foundation: 42 Inch (Unfinished)						
Base Cost			1345	43,376	26,026	
Local Cost Items						
SHED			120	936	421	*4
			Totals:	217,583	130,408	

Notes:

ECF (RESIDENTIAL) 1.297 => TCV: 169,140

*** Information herein deemed reliable but not guaranteed***

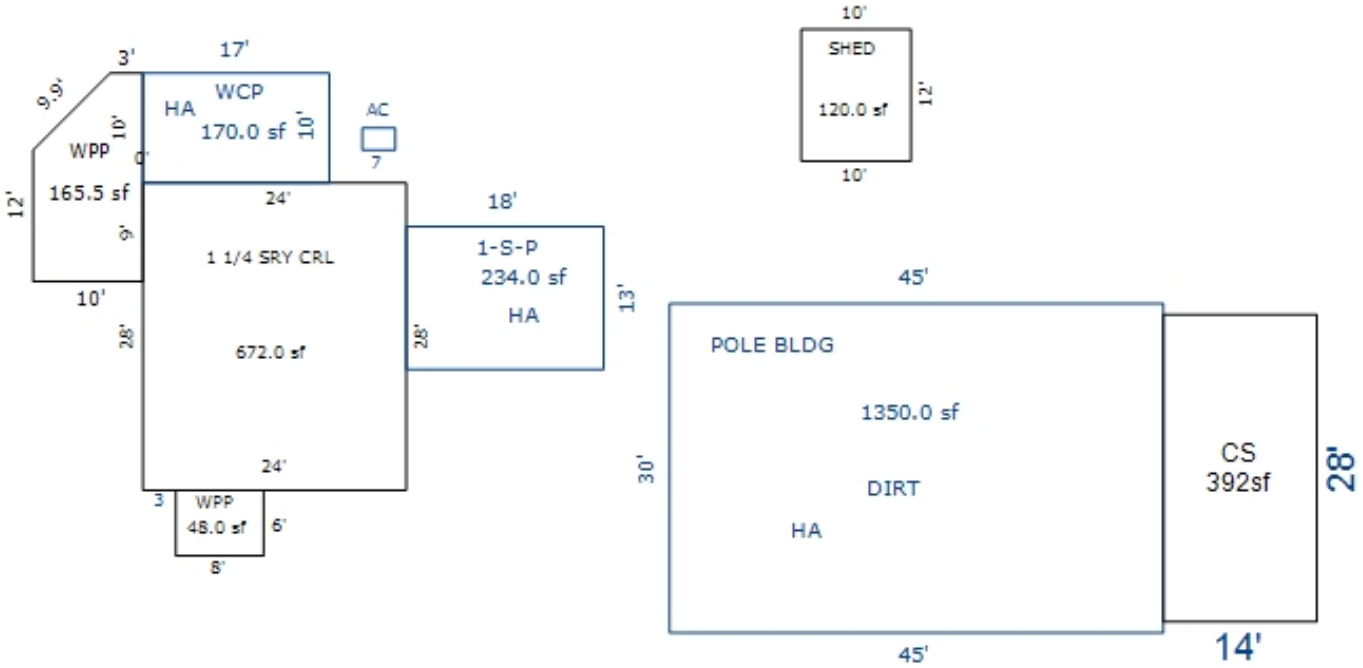

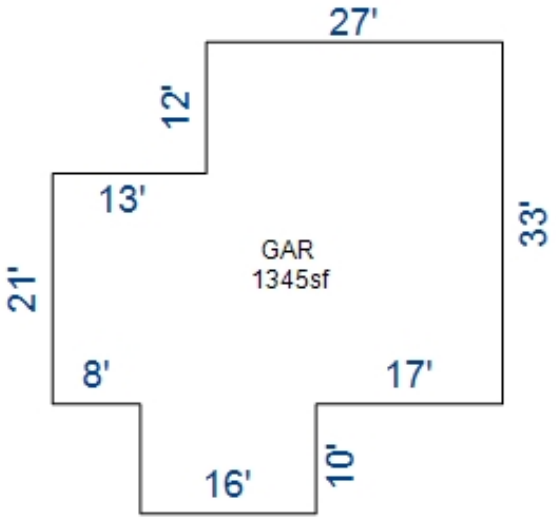

*** Information herein deemed reliable but not guaranteed***

Parcel Number: 2410-12-4401 Jurisdiction: GREENWOOD TWP County: WEXFORD Printed on 02/15/2024

Grantor	Grantee	Sale Price	Sale Date	Inst. Type	Terms of Sale	Liber & Page	Verified By	Prcnt. Trans.
WESTBROOK SCHOOL CAMP	WESTBROOK, ERIC J	48,000	09/06/2000	WD	03-ARM'S LENGTH	375:993	DEED	0.0

Property Address

5979 E 6 RD

Owner's Name/Address

WESTBROOK, ERIC J
7078 OAK DR
MANTON MI 49663

Tax Description

PAR COM AT SE COR OF SEC; N 755.09 FT; W 648.54 FT; S 754.79 FT; E 646.52 FT TO POB. --11.2 A M/L-- GW. SEC. 12 T24N R10W -MANTON- ASSESSED W/ 12-4402 '00

Comments/Influences

Default Comments

The Equalizer. Copyright (c) 1999 - 2009. Licensed To: Township of Greenwood, County of Wexford, Michigan

Class: RESIDENTIAL-IMPROV Zoning:

School: MANTON CONSOLIDATED SCHOOLS

P.R.E. 0%

:

2024 Est TCV 46,584

Building Permit(s)	Date	Number	Status

	Improved	X	Vacant

	Public Improvements
X	Dirt Road
X	Gravel Road
	Paved Road
	Storm Sewer
	Sidewalk
	Water
	Sewer
	Electric
	Gas
	Curb
	Street Lights
	Standard Utilities
	Underground Utils.

	Topography of Site
X	Level
X	Rolling
	Low
	High
	Landscaped
	Swamp
	Wooded
	Pond
	Waterfront
	Ravine
	Wetland
	Flood Plain
X	OPEN/PINES

Who	When	What
GLA	05/13/2021	INSPECTION
LM	10/21/2010	INSPECTED
GLA	05/03/2016	INSPECTION

Land Value Estimates for Land Table 4010.LAND VALUES

Description	Frontage	Depth	* Factors * Front	Depth	Rate	%Adj.	Reason	Value
ACREAGE			10.710 Acres		4,350	100		46,584
ROW			0.490 Acres		0	100		0
			11.20 Total Acres		Total Est. Land Value =			46,584

Year	Land Value	Building Value	Assessed Value	Board of Review	Tribunal/ Other	Taxable Value
2024	23,300	0	23,300			9,376C
2023	13,900	0	13,900			8,930C
2022	12,700	0	12,700			8,505C
2021	12,900	6,500	19,400			12,883C

*** Information herein deemed reliable but not guaranteed***

Parcel Number: 2410-13-1101 Jurisdiction: GREENWOOD TWP County: WEXFORD Printed on 02/15/2024

Grantor	Grantee	Sale Price	Sale Date	Inst. Type	Terms of Sale	Liber & Page	Verified By	Prcnt. Trans.

Property Address
9901 N 37 RD

Owner's Name/Address
GROESSER, ROBERT E. & MARY E TRUST 9901 N 37 RD MANTON MI 49663

Tax Description
N 1/2 OF NE 1/4 EXC SE 1/4 OF NE 1/4 OF NE 1/4 & EXC COM AT NE COR OF SEC; S 10 RDS; W 30 RDS; TH S 15 RDS; W 50 RDS TO 1/8-LINE; N 25 RDS; E TO BEG. 60.3 A. M/L GW. SEC. 13 T24N R10W -MANTON-

Comments/Influences

The Equalizer. Copyright (c) 1999 - 2009.
Licensed To: Township of Greenwood, County of Wexford, Michigan

Class: RESIDENTIAL-IMPROV Zoning:
School: MANTON CONSOLIDATED SCHOOLS
P.R.E. 100% / /
:
2024 Est TCV 299,939 TCV/TFA: 256.14

Building Permit(s)	Date	Number	Status
RESIDENTIAL - REMODEL	09/16/2003	PB11853	

X	Improved	
	Vacant	

	Public Improvements
	Dirt Road
X	Gravel Road
	Paved Road
	Storm Sewer
	Sidewalk
	Water
	Sewer
X	Electric
	Gas
	Curb
	Street Lights
	Standard Utilities
	Underground Utils.

	Topography of Site
X	Level
X	Rolling
	Low
	High
	Landscaped
	Swamp
	Wooded
	Pond
	Waterfront
	Ravine
	Wetland
	Flood Plain

Who	When	What
GLA	10/31/2022	INSPECTION
GLA	05/13/2021	INSPECTION
LM	10/28/2011	APPR INSPE

Land Value Estimates for Land Table 4010.LAND VALUES

Description	Frontage	Depth	* Factors * Front	Depth	Rate	%Adj.	Reason	Value
ACREAGE			58.942 Acres		2,649	100		156,112
ROW			1.357 Acres		0	100		0
			60.30 Total Acres		Total Est. Land Value =			156,112

Land Improvement Cost Estimates

Description	Rate	Size	% Good	Cash Value
D/W/P: 3.5 Concrete	5.82	465	0	0
Wood Frame	18.03	736	18	2,389
Total Estimated Land Improvements True Cash Value =				2,389

Year	Land Value	Building Value	Assessed Value	Board of Review	Tribunal/ Other	Taxable Value
2024	78,100	71,900	150,000			43,286C
2023	75,700	58,100	133,800			41,225C
2022	50,100	48,500	98,600			39,262C
2021	48,300	50,000	98,300			38,008C

*** Information herein deemed reliable but not guaranteed***

Building Type

X	Single Family
	Mobile Home
	Town Home
	Duplex
	A-Frame
X	Wood Frame

Building Style: PLAIN

Yr Built	Remodeled
1948	0

Condition: Fair

Room List

	Basement
	1st Floor
	2nd Floor
	Bedrooms

(1) Exterior

	Wood/Shingle
	Aluminum/Vinyl
	Brick
X	Vinyl
	Insulation

(2) Windows

X	Many		Large
	Avg.	X	Avg.
	Few		Small

	Wood Sash
	Metal Sash
X	Vinyl Sash
	Double Hung
	Horiz. Slide
	Casement
	Double Glass
X	Patio Doors
X	Storms & Screens

(3) Roof

X	Gable		Gambrel
	Hip		Mansard
	Flat		Shed

X	Asphalt Shingle

Chimney: Brick

(3) Roof (cont.)

	Eavestrough
	Insulation
0	Front Overhang
0	Other Overhang

(4) Interior

	Drywall		Plaster
	Paneled		Wood T&G

Trim & Decoration

	Ex		Ord		Min

Size of Closets

	Lg		Ord		Small

Doors:		Solid		H.C.	

(5) Floors

Kitchen:
Other:
Other:

(6) Ceilings

(7) Excavation

Basement: 0 S.F.
Crawl: 1171 S.F.
Slab: 0 S.F.
Height to Joists: 0.0

(8) Basement

	Conc. Block
	Poured Conc.
	Stone
	Treated Wood
	Concrete Floor

(9) Basement Finish

	Recreation	SF
	Living	SF
	Walkout Doors (B)	
	No Floor	SF
	Walkout Doors (A)	

(10) Floor Support

Joists:
Unsupported Len:
Cntr.Sup:

(11) Heating/Cooling

X	Gas		Oil		Elec.
	Wood		Coal		Steam

	Forced Air w/o Ducts
X	Forced Air w/ Ducts
	Forced Hot Water
	Electric Baseboard
	Elec. Ceil. Radiant
	Radiant (in-floor)
	Electric Wall Heat
	Space Heater
	Wall/Floor Furnace
	Forced Heat & Cool
	Heat Pump
	No Heating/Cooling

	Central Air
	Wood Furnace

(12) Electric

0	Amps Service

No./Qual. of Fixtures

	Ex.		Ord.		Min

No. of Elec. Outlets

	Many		Ave.		Few

(13) Plumbing

1	Average Fixture(s)
	3 Fixture Bath
	2 Fixture Bath
	Softener, Auto
	Softener, Manual
	Solar Water Heat
	No Plumbing
	Extra Toilet
	Extra Sink
	Separate Shower
	Ceramic Tile Floor
	Ceramic Tile Wains
	Ceramic Tub Alcove
	Vent Fan

(14) Water/Sewer

	Public Water
	Public Sewer
1	Water Well
1	1000 Gal Septic
	2000 Gal Septic

Lump Sum Items:

(15) Built-ins

	Appliance Allow.
	Cook Top
	Dishwasher
	Garbage Disposal
	Bath Heater
	Vent Fan
	Hot Tub
	Unvented Hood
	Vented Hood
	Intercom
	Jacuzzi Tub
	Jacuzzi repl.Tub
	Oven
	Microwave
	Standard Range
	Self Clean Range
	Sauna
	Trash Compactor
	Central Vacuum
	Security System

(15) Fireplaces

	Interior 1 Story
	Interior 2 Story
	2nd/Same Stack
	Two Sided
	Exterior 1 Story
	Exterior 2 Story
	Prefab 1 Story
	Prefab 2 Story
	Heat Circulator
	Raised Hearth
	Wood Stove
	Direct-Vented Gas

Class: CD
Effec. Age: 57
Floor Area: 1,171
Total Base New : 242,338 E.C.F.
Total Depr Cost: 109,050 X 1.297
Estimated T.C.V: 141,438

(16) Porches/Decks

Area	Type
384	CCP (1 Story)
156	WCP (1 Story)
128	CPP
156	Treated Wood
128	Treated Wood
69	Treated Wood
20	Treated Wood

(17) Garage

Year Built:
Car Capacity:
Class: CD
Exterior: Siding
Brick Ven.: 0
Stone Ven.: 0
Common Wall: Detache
Foundation: 18 Inch
Finished ?:
Auto. Doors: 0
Mech. Doors: 0
Area: 1344
% Good: 0
Storage Area: 0
No Conc. Floor: 0

Bsmnt Garage:

Carport Area:
Roof:

Cost Est. for Res. Bldg: 1 Single Family PLAIN Cls CD Blt 1948
(11) Heating System: Forced Air w/ Ducts
Ground Area = 1171 SF Floor Area = 1171 SF.
Phy/Ab.Phy/Func/Econ/Comb. % Good=45/100/100/100/45
Building Areas

Stories	Exterior	Foundation	Size	Cost New	Depr. Cost
1 Story	Siding	Crawl Space	1,171		
			Total:	136,169	61,275
Other Additions/Adjustments					
Water/Sewer					
1000 Gal Septic			1	4,582	2,062
Water Well, 100 Feet			1	5,680	2,556
Porches					
CCP (1 Story)			384	8,609	3,874
WCP (1 Story)			156	6,131	2,759
CPP			128	2,268	1,021
Deck					
Treated Wood w/Roof (Deck Portion)			156	3,465	1,559
Treated Wood w/Roof (Roof portion)			156	2,498	1,124
Treated Wood w/Roof (Deck Portion)			128	3,043	1,369
Treated Wood w/Roof (Roof portion)			128	2,090	940
Treated Wood			69	2,068	931
Treated Wood			20	901	405
Garages					
Class: CD Exterior: Siding Foundation: 18 Inch (Unfinished)					
Base Cost			1344	38,989	17,545
Class: D Exterior: Pole (Unfinished)					
Base Cost			1344	25,845	11,630
			Totals:	242,338	109,050

Notes:

ECF (RESIDENTIAL) 1.297 => TCV: 141,438

*** Information herein deemed reliable but not guaranteed***

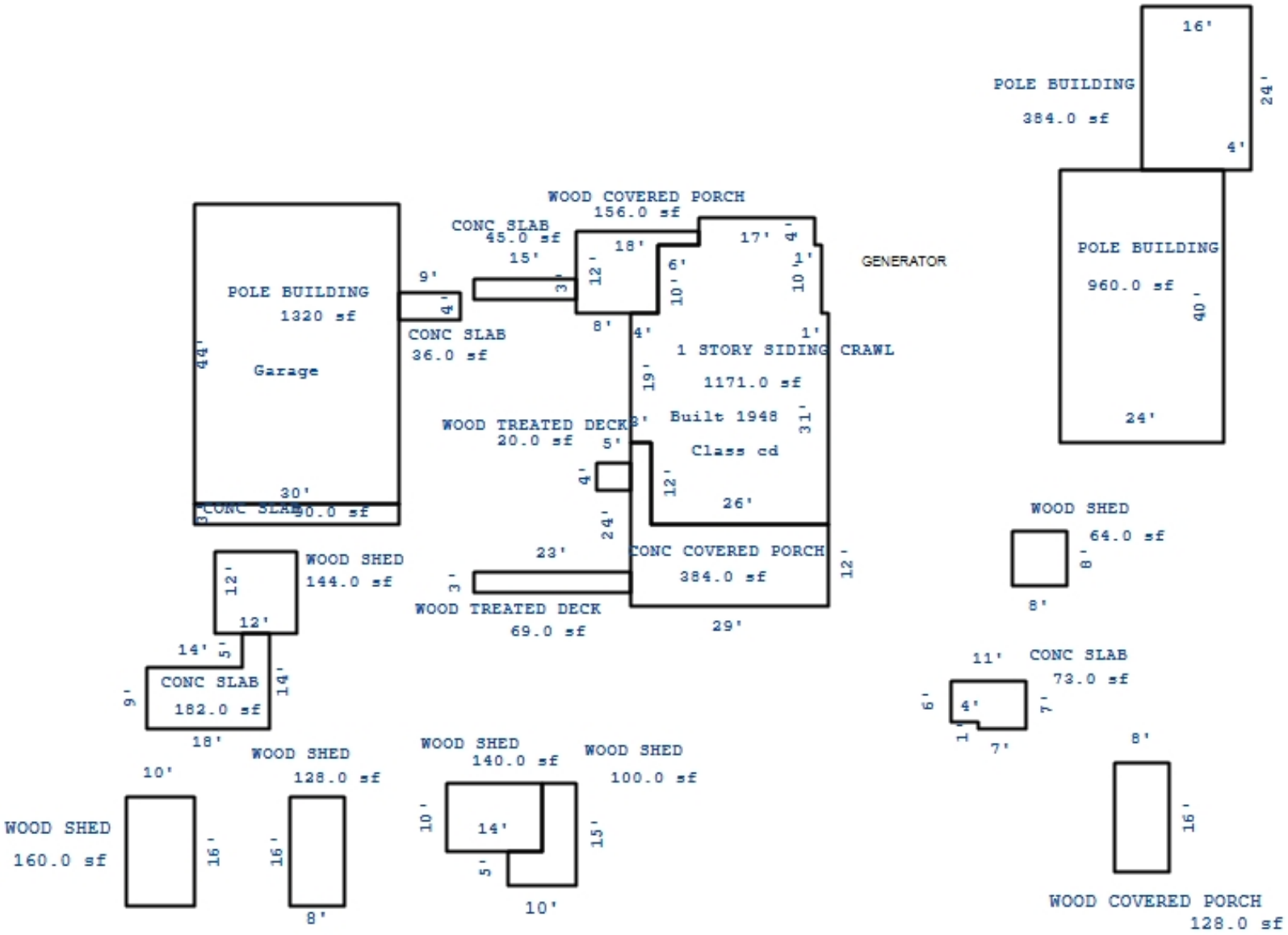

*** Information herein deemed reliable but not guaranteed***

Parcel Number: 2410-13-1102 Jurisdiction: GREENWOOD TWP County: WEXFORD Printed on 02/15/2024

Grantor	Grantee	Sale Price	Sale Date	Inst. Type	Terms of Sale	Liber & Page	Verified By	Prcnt. Trans.
WESTBROOK, RAMON	WESTBROOK, RAMON & LINDA E	100	10/22/2015	QC	09-FAMILY	676/782	DEED	0.0

Property Address

Owner's Name/Address

WESTBROOK, RAMON & LINDA ETAL
4709 E. MARSH RD.
KINGSLEY MI 49649

Tax Description

COM IN NE COR OF SEC: S 10 RDS; W 30 RDS; S 15 RDS; W 50 RDS TO E 1/8-LINE; N 25 RDS; E TO BEG. --9.7 A. M/L-- GW. SEC. 13 T24N R10W -MANTON-

Comments/Influences

The Equalizer. Copyright (c) 1999 - 2009. Licensed To: Township of Greenwood, County of Wexford, Michigan

Class: RESIDENTIAL-VACANT Zoning:

School: MANTON CONSOLIDATED SCHOOLS

P.R.E. 0%

:

2024 Est TCV 41,419

Building Permit(s)	Date	Number	Status

Improved | X | Vacant

Public Improvements

Dirt Road
Gravel Road
Paved Road
Storm Sewer
Sidewalk
Water
Sewer
Electric
Gas
Curb
Street Lights
Standard Utilities
Underground Utils.

Topography of Site

Level
Rolling
Low
High
Landscaped
Swamp
Wooded
Pond
Waterfront
Ravine
Wetland
Flood Plain

Who When What

GLA 05/03/2016 INSPECTION

Land Value Estimates for Land Table 4010.LAND VALUES

Description	Frontage	Depth	* Factors * Front	Depth	Rate	%Adj.	Reason	Value
ACREAGE			8.600 Acres		4,816	100		41,419
ROW			1.100 Acres		0	100		0
			9.70 Total Acres		Total Est. Land Value =			41,419

Year	Land Value	Building Value	Assessed Value	Board of Review	Tribunal/ Other	Taxable Value
2024	20,700	0	20,700			6,441C
2023	12,500	0	12,500			6,135C
2022	11,300	0	11,300			5,843C
2021	12,000	0	12,000			5,657C

*** Information herein deemed reliable but not guaranteed***

Parcel Number: 2410-13-1103 Jurisdiction: GREENWOOD TWP County: WEXFORD Printed on 02/15/2024

Grantor	Grantee	Sale Price	Sale Date	Inst. Type	Terms of Sale	Liber & Page	Verified By	Prcnt. Trans.

Property Address	Class: RESIDENTIAL-IMPROV	Zoning:	Building Permit(s)	Date	Number	Status
9763 N 37 RD	School: MANTON CONSOLIDATED SCHOOLS		COMMERCIAL - REMODEL	02/21/1997	PE10235	
	P.R.E. 100% / /					
Owner's Name/Address	:					
WESTBROOK, WESLEY J. & ANGELA 9763 N 37 RD MANTON MI 49663	2024 Est TCV 206,934 TCV/TFA: 184.76					

X Improved | Vacant

Public Improvements

- Dirt Road
- Gravel Road
- Paved Road
- Storm Sewer
- Sidewalk
- Water
- Sewer
- Electric
- Gas
- Curb
- Street Lights
- Standard Utilities
- Underground Utils.

Topography of Site

- Level
- Rolling
- Low
- High
- Landscaped
- Swamp
- Wooded
- Pond
- Waterfront
- Ravine
- Wetland
- Flood Plain

Tax Description

SE 1/4 OF NE 1/4 OF NE 1/4 10 A. GW. SEC. 13 T24N R10W -MANTON-

Comments/Influences

The Equalizer. Copyright (c) 1999 - 2009. Licensed To: Township of Greenwood, County of Wexford, Michigan

Who When What

GLA 05/03/2016 INSPECTION

Land Value Estimates for Land Table 4010.LAND VALUES

Description	Frontage	Depth	* Factors * Front	Depth	Rate	%Adj.	Reason	Value
ACREAGE			9.500 Acres		4,694	100		44,589
ROW			0.500 Acres		0	100		0
			10.00 Total Acres		Total Est. Land Value =			44,589

Land Improvement Cost Estimates

Description	Rate	Size	% Good	Cash Value
Wood Frame	26.52	160	60	2,546
Total Estimated Land Improvements True Cash Value =				2,546

Year	Land Value	Building Value	Assessed Value	Board of Review	Tribunal/ Other	Taxable Value
2024	22,300	81,200	103,500			46,918C
2023	12,800	66,600	79,400			44,684C
2022	11,800	56,500	68,300			42,557C
2021	12,000	57,300	69,300			41,198C

*** Information herein deemed reliable but not guaranteed***

Building Type

X	Single Family
	Mobile Home
	Town Home
	Duplex
	A-Frame
X	Wood Frame

Building Style: PLAIN

Yr Built	Remodeled
0	0

Condition: Good

Room List

	Basement
	1st Floor
	2nd Floor
	Bedrooms

(1) Exterior

	Wood/Shingle
X	Aluminum/Vinyl
	Brick
X	Insulation

(2) Windows

	Many		Large
X	Avg.	X	Avg.
	Few		Small

	Wood Sash
	Metal Sash
X	Vinyl Sash
	Double Hung
	Horiz. Slide
	Casement
	Double Glass
	Patio Doors
X	Storms & Screens

(3) Roof

X	Gable		Gambrel
	Hip		Mansard
	Flat		Shed

X	Asphalt Shingle

Chimney:

(3) Roof (cont.)

	Eavestrough
X	Insulation
0	Front Overhang
0	Other Overhang

(4) Interior

X	Drywall		Plaster
	Paneled		Wood T&G

Trim & Decoration

	Ex	X	Ord		Min

Size of Closets

	Lg	X	Ord		Small

Doors:		Solid	X	H.C.	

(5) Floors

Kitchen:
Other: Linoleum
Other: Carpeted

(6) Ceilings

X	Drywall

(7) Excavation

Basement: 480 S.F.
Crawl: 640 S.F.
Slab: 0 S.F.
Height to Joists: 0.0

(8) Basement

	Conc. Block
	Poured Conc.
	Stone
	Treated Wood
	Concrete Floor

(9) Basement Finish

	Recreation SF
	Living SF
	Walkout Doors (B)
	No Floor SF
	Walkout Doors (A)

(10) Floor Support

Joists:
Unsupported Len:
Cntr.Sup:

(11) Heating/Cooling

X	Gas		Oil		Elec.
	Wood		Coal		Steam

	Forced Air w/o Ducts
X	Forced Air w/ Ducts
	Forced Hot Water
	Electric Baseboard
	Elec. Ceil. Radiant
	Radiant (in-floor)
	Electric Wall Heat
	Space Heater
	Wall/Floor Furnace
	Forced Heat & Cool
	Heat Pump
	No Heating/Cooling

	Central Air
	Wood Furnace

(12) Electric

150	Amps Service

No./Qual. of Fixtures

	Ex.	X	Ord.		Min

No. of Elec. Outlets

	Many	X	Ave.		Few

(13) Plumbing

1	Average Fixture(s)
	3 Fixture Bath
	2 Fixture Bath
	Softener, Auto
	Softener, Manual
	Solar Water Heat
	No Plumbing
	Extra Toilet
	Extra Sink
	Separate Shower
	Ceramic Tile Floor
	Ceramic Tile Wains
	Ceramic Tub Alcove
	Vent Fan

(14) Water/Sewer

	Public Water
	Public Sewer
1	Water Well
1	1000 Gal Septic
	2000 Gal Septic

Lump Sum Items:

(15) Built-ins

	Appliance Allow.
	Cook Top
	Dishwasher
	Garbage Disposal
	Bath Heater
	Vent Fan
	Hot Tub
	Unvented Hood
	Vented Hood
	Intercom
	Jacuzzi Tub
	Jacuzzi repl.Tub
	Oven
	Microwave
	Standard Range
	Self Clean Range
	Sauna
	Trash Compactor
	Central Vacuum
	Security System

(15) Fireplaces

	Interior 1 Story
	Interior 2 Story
	2nd/Same Stack
	Two Sided
	Exterior 1 Story
	Exterior 2 Story
	Prefab 1 Story
	Prefab 2 Story
	Heat Circulator
	Raised Hearth
	Wood Stove
	Direct-Vented Gas

Class: CD
Effec. Age: 40
Floor Area: 1,120
Total Base New : 205,346 E.C.F.
Total Depr Cost: 123,207 X 1.297
Estimated T.C.V: 159,799

(16) Porches/Decks

Area	Type
21	WPP
51	WPP
32	WCP (1 Story)

(17) Garage

Year Built:
Car Capacity:
Class: CD
Exterior: Siding
Brick Ven.: 0
Stone Ven.: 0
Common Wall: Detache
Foundation: 18 Inch
Finished ?:
Auto. Doors: 0
Mech. Doors: 0
Area: 1200
% Good: 0
Storage Area: 0
No Conc. Floor: 1200

Bsmnt Garage:

Carport Area:
Roof:

Cost Est. for Res. Bldg: 1 Single Family PLAIN Cls CD Blt 0
(11) Heating System: Forced Air w/ Ducts
Ground Area = 1120 SF Floor Area = 1120 SF.
Phy/Ab.Phy/Func/Econ/Comb. % Good=60/100/100/100/60
Building Areas

Stories	Exterior	Foundation	Size	Cost New	Depr. Cost
1 Story	Siding	Basement	480		
1 Story	Siding	Crawl Space	640		
			Total:	142,236	85,342
Other Additions/Adjustments					
Water/Sewer					
1000 Gal Septic			1	4,582	2,749
Water Well, 100 Feet			1	5,680	3,408
Porches					
WPP			51	1,881	1,129
WCP (1 Story)			32	2,190	1,314
WPP			21	1,057	634
Garages					
Class: CD Exterior: Pole (Unfinished)					
Base Cost			768	18,394	11,036
Class: CD Exterior: Siding Foundation: 18 Inch (Unfinished)					
Base Cost			1200	34,812	20,887
No Concrete Floor			1200	-7,380	-4,428
Local Cost Items					
POLE LEANTO DIRT			512	1,894	1,136
			Totals:	205,346	123,207

Notes:

ECF (RESIDENTIAL) 1.297 => TCV: 159,799

*** Information herein deemed reliable but not guaranteed***

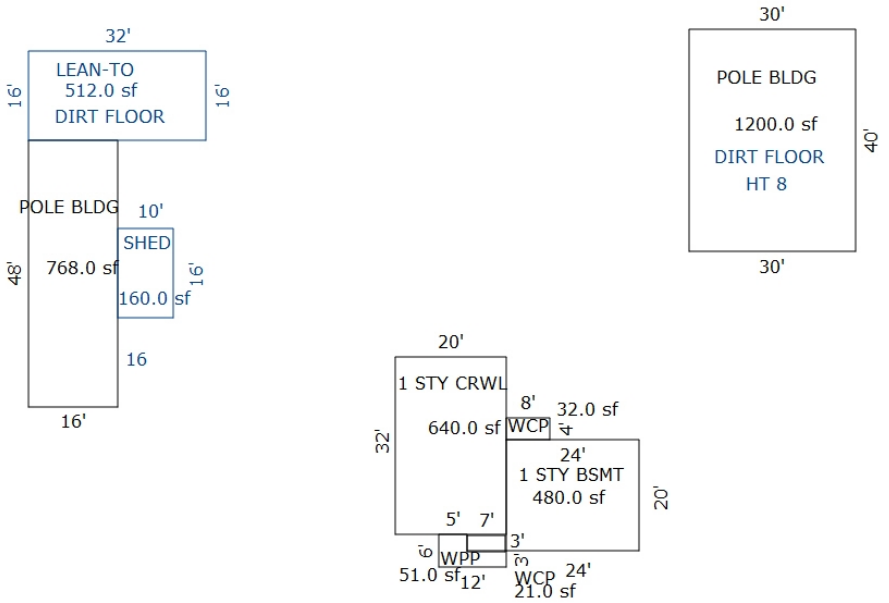

Sketch by Apex Sketch

*** Information herein deemed reliable but not guaranteed***

Parcel Number: 2410-13-1301 Jurisdiction: GREENWOOD TWP County: WEXFORD Printed on 02/15/2024

Grantor	Grantee	Sale Price	Sale Date	Inst. Type	Terms of Sale	Liber & Page	Verified By	Prcnt. Trans.
SOLDANO, ROGER & MARY	ADDINGTON, CHAD L & NICOLE	435,000	10/08/2019	WD	03-ARM'S LENGTH	6852/926	DEED	100.0
SCAFE, DOUGLAS G & JANE E	SOLDANO, ROGER & MARY	410,000	05/12/2016	WD	03-ARM'S LENGTH	6772/077	DEED	100.0
JAGER, LESLIE ETAL	SCAFE, DOUGLAS G	110,000	05/11/2001	WD	03-ARM'S LENGTH	380:650	DEED	0.0

Property Address

9641 N 37 RD

Owner's Name/Address

ADDINGTON, CHAD L & NICOLE
9641 N 37 RD
MANTON MI 49663-9745

Tax Description

S 1/2 OF NE 1/4 EXC E 240 FT OF S 240 FT. --78.68 A. M/L-- GW. SEC. 13 T24N R10W -MANTON-

Comments/Influences

Default Comments

The Equalizer. Copyright (c) 1999 - 2009.
Licensed To: Township of Greenwood, County of Wexford, Michigan

Class: RESIDENTIAL-IMPROV Zoning:
School: MANTON CONSOLIDATED SCHOOLS
P.R.E. 100% 10/16/2019
:
2024 Est TCV 649,137 TCV/TFA: 429.32

Building Permit(s)	Date	Number	Status
RESIDENTIAL - REMODEL	05/13/2003	PB11532	
RESIDENTIAL - NEW	12/03/2002	PM6417	
RESIDENTIAL - NEW	10/16/2002	PE14891	
RESIDENTIAL - NEW	06/26/2002	PM5977	

X Improved | Vacant

Public Improvements

Dirt Road
Gravel Road
Paved Road
Storm Sewer
Sidewalk
Water
Sewer
Electric
Gas
Curb
Street Lights
Standard Utilities
Underground Utils.

Topography of Site

Level
Rolling
Low
High
Landscaped
Swamp
Wooded
Pond
Waterfront
Ravine
Wetland
Flood Plain

Who	When	What
GLA	05/13/2021	INSPECTION
LM	10/21/2010	INSPECTED
GLA	05/03/2016	INSPECTION

Land Value Estimates for Land Table 4010.LAND VALUES

Description	Frontage	Depth	* Factors * Front	Depth	Rate	%Adj.	Reason	Value
ACREAGE			77.840 Acres		2,549	100		198,406
ROW			0.840 Acres		0	100		0
			78.68 Total Acres		Total Est. Land Value =			198,406

Land Improvement Cost Estimates

Description	Rate	Size	% Good	Cash Value
D/W/P: Patio Blocks	13.19	236	58	1,806
D/W/P: 3.5 Concrete	5.82	208	58	702
D/W/P: 3.5 Concrete	5.82	428	58	1,445
D/W/P: 3.5 Concrete	5.82	428	58	1,445
Fencing: Wire Mesh, #9	3.69	1280	68	3,212
Wood Frame	21.02	160	37	1,244
Wood Frame	23.57	96	37	837
Total Estimated Land Improvements True Cash Value =				10,691

Year	Land Value	Building Value	Assessed Value	Board of Review	Tribunal/ Other	Taxable Value
2024	99,200	225,400	324,600			245,085C
2023	84,600	184,600	269,200			233,415C
2022	66,200	156,100	222,300			222,300S
2021	60,600	161,800	222,400			222,400S

*** Information herein deemed reliable but not guaranteed***

Building Type

X	Single Family
	Mobile Home
	Town Home
	Duplex
	A-Frame
X	Wood Frame

Building Style: PLAIN

Yr Built	Remodeled
2002	0

Condition: Average

Room List

	Basement
	1st Floor
	2nd Floor
4	Bedrooms

(1) Exterior

	Wood/Shingle
	Aluminum/Vinyl
	Brick
X	Vinyl
	Insulation

(2) Windows

X	Many Avg. Few	X	Large Avg. Small

	Wood Sash
	Metal Sash
X	Vinyl Sash
X	Double Hung
	Horiz. Slide
	Casement
	Double Glass
	Patio Doors
X	Storms & Screens

(3) Roof

X	Gable		Gambrel
	Hip		Mansard
	Flat		Shed

X	Asphalt Shingle

Chimney:

(3) Roof (cont.)

	Eavestrough
	Insulation
0	Front Overhang
0	Other Overhang

(4) Interior

	Drywall Paneled	X	Plaster Wood T&G

Trim & Decoration

	Ex	X	Ord		Min

Size of Closets

	Lg	X	Ord		Small

Doors:		Solid	X	H.C.	

(5) Floors

Kitchen: Tile
Other: Hardwood
Other:

(6) Ceilings

X	Wood

(7) Excavation

Basement: 1512 S.F.
Crawl: 0 S.F.
Slab: 0 S.F.
Height to Joists: 0.0

(8) Basement

	Conc. Block
	Poured Conc.
	Stone
	Treated Wood
	Concrete Floor

(9) Basement Finish

	Recreation	SF
1392	Living	SF
1	Walkout Doors (B)	
	No Floor	SF
	Walkout Doors (A)	

(10) Floor Support

Joists:
Unsupported Len:
Cntr.Sup:

(11) Heating/Cooling

X	Gas		Oil		Elec.
	Wood		Coal		Steam

	Forced Air w/o Ducts
X	Forced Air w/ Ducts
	Forced Hot Water
	Electric Baseboard
	Elec. Ceil. Radiant
	Radiant (in-floor)
	Electric Wall Heat
	Space Heater
	Wall/Floor Furnace
	Forced Heat & Cool
	Heat Pump
	No Heating/Cooling

X	Central Air
X	Wood Furnace

(12) Electric

0	Amps Service

No./Qual. of Fixtures

	Ex.	X	Ord.		Min

No. of Elec. Outlets

	Many	X	Ave.		Few

(13) Plumbing

3	Average Fixture(s)
	3 Fixture Bath
	2 Fixture Bath
	Softener, Auto
	Softener, Manual
	Solar Water Heat
	No Plumbing
	Extra Toilet
	Extra Sink
	Separate Shower
	Ceramic Tile Floor
	Ceramic Tile Wains
	Ceramic Tub Alcove
	Vent Fan

(14) Water/Sewer

	Public Water
	Public Sewer
1	Water Well
1	1000 Gal Septic
	2000 Gal Septic

Lump Sum Items:

(15) Built-ins

	Appliance Allow.
	Cook Top
	Dishwasher
	Garbage Disposal
	Bath Heater
	Vent Fan
	Hot Tub
	Unvented Hood
	Vented Hood
	Intercom
	Jacuzzi Tub
	Jacuzzi repl.Tub
	Oven
	Microwave
	Standard Range
	Self Clean Range
	Sauna
	Trash Compactor
	Central Vacuum
	Security System

(15) Fireplaces

	Interior 1 Story
	Interior 2 Story
	2nd/Same Stack
	Two Sided
	Exterior 1 Story
	Exterior 2 Story
	Prefab 1 Story
	Prefab 2 Story
	Heat Circulator
	Raised Hearth
	Wood Stove
	Direct-Vented Gas

Class: C
Effec. Age: 22
Floor Area: 1,512
Total Base New : 434,970 E.C.F.
Total Depr Cost: 339,275 X 1.297
Estimated T.C.V: 440,040

(16) Porches/Decks

Area	Type
374	Treated Wood
53	Treated Wood
100	Treated Wood

(17) Garage

Year Built:
Car Capacity:
Class: C
Exterior: Siding
Brick Ven.: 0
Stone Ven.: 0
Common Wall: 1 Wall
Foundation: 42 Inch
Finished ?: Yes
Auto. Doors: 0
Mech. Doors: 0
Area: 768
% Good: 0
Storage Area: 0
No Conc. Floor: 0

Bsmnt Garage:

Carport Area:
Roof:

Cost Est. for Res. Bldg: 1 Single Family PLAIN Cls C Blt 2002
(11) Heating System: Forced Air w/ Ducts , Wood Furnace Add-On
Ground Area = 1512 SF Floor Area = 1512 SF.
Phy/Ab.Phy/Func/Econ/Comb. % Good=78/100/100/100/78

Building Areas

Stories	Exterior	Foundation	Size	Cost New	Depr. Cost
1 Story	Siding	Basement	1,512		
			Total:	221,147	172,494
Other Additions/Adjustments					
Basement Living Area			1392	50,265	39,207
Basement, Outside Entrance, Below Grade			1	2,578	2,011
Plumbing					
3 Fixture Bath			2	9,357	7,298
Water/Sewer					
1000 Gal Septic			1	4,899	3,821
Water Well, 100 Feet			1	5,849	4,562
Deck					
Treated Wood			374	6,291	4,907
Treated Wood w/Roof (Deck Portion)			53	1,832	1,429
Treated Wood w/Roof (Roof portion)			53	1,046	816
Treated Wood w/Roof (Deck Portion)			100	2,572	2,006
Treated Wood w/Roof (Roof portion)			100	1,839	1,434
Garages					
Class: C Exterior: Siding Foundation: 42 Inch (Finished)					
Base Cost			768	36,972	28,838
Common Wall: 1 Wall			1	-2,705	-2,110
Class: C Exterior: Pole (Finished)					
Base Cost			2744	88,028	68,662
Local Cost Items					
OUTSIDE FURNACE			1	5,000	3,900

<<<<< Calculations too long. See Valuation printout for complete pricing. >>>>>

*** Information herein deemed reliable but not guaranteed***

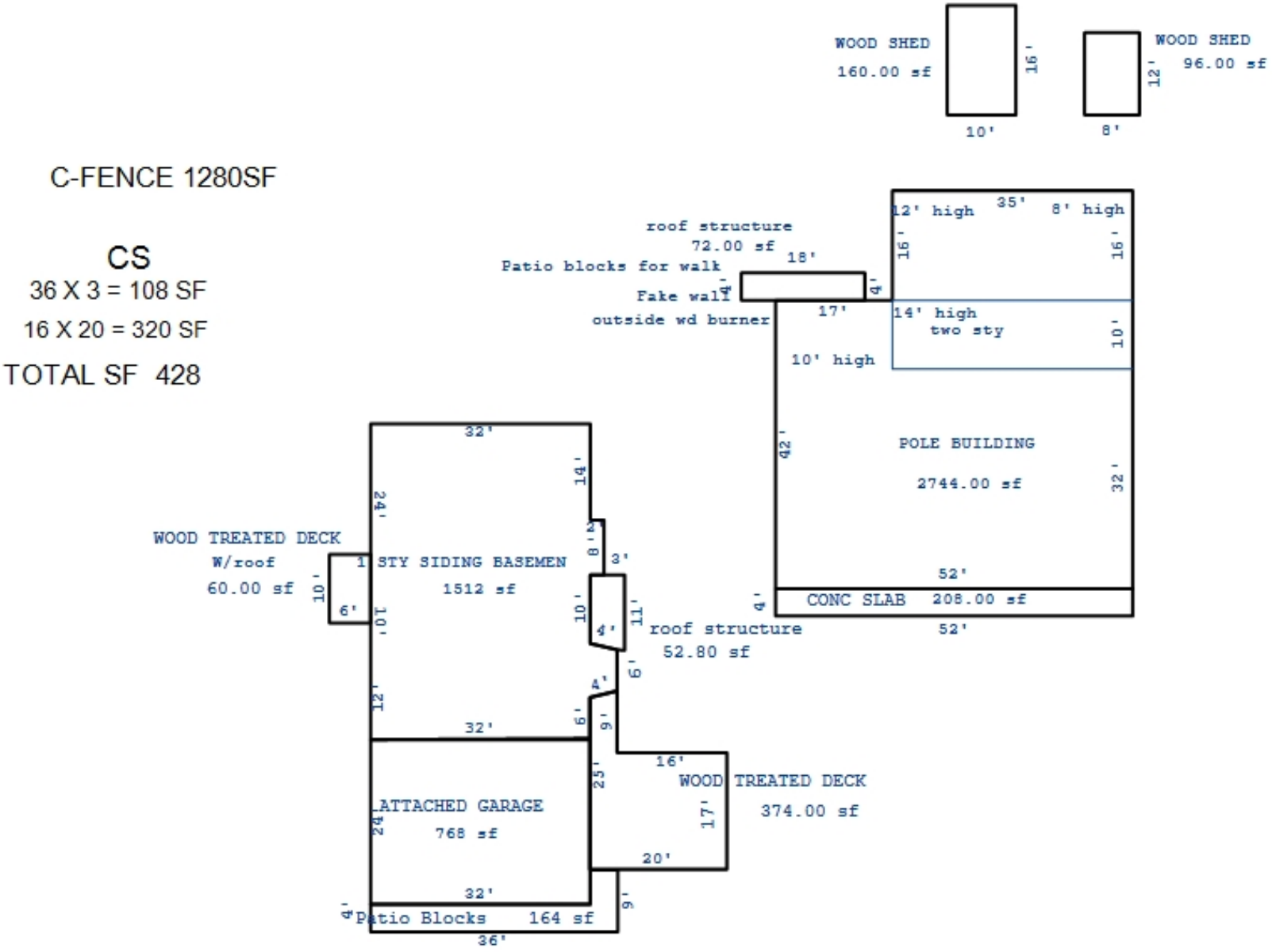

*** Information herein deemed reliable but not guaranteed***

Parcel Number: 2410-13-1402 Jurisdiction: GREENWOOD TWP County: WEXFORD Printed on 02/15/2024

Grantor	Grantee	Sale Price	Sale Date	Inst. Type	Terms of Sale	Liber & Page	Verified By	Prcnt. Trans.
UITHOL, JON C & NANCY R TR	UITHOL, SCOTT	85,000	02/01/2019	WD	09-FAMILY	6847/47	DEED	100.0
UITHOL, JON C.	UITHOL, JON C & NANCY R TR	0	02/07/2017	WD	14-INTO/OUT OF TRUST	679/1293	DEED	0.0

Property Address
9541 N 37 RD

Owner's Name/Address
UITHOL, SCOTT
8919 KIGER ST
LORTON VA 22079

Tax Description
S 240 FT OF E 240 FT OF NE 1/4; & N 1/4 OF SE 1/4 EXC S 66 FT --36.14 A M/L-- GW. SEC. 13 T24N R10W -MANTON-

Comments/Influences

The Equalizer. Copyright (c) 1999 - 2009. Licensed To: Township of Greenwood, County of Wexford, Michigan

Class: RESIDENTIAL-IMPROV Zoning:
School: MANTON CONSOLIDATED SCHOOLS
P.R.E. 0%
:
2024 Est TCV 321,554 TCV/TFA: 223.30

Building Permit(s)	Date	Number	Status
Pole Barn	03/07/2023	PB23-0025	ENTERED

X Improved | | Vacant

Public Improvements
Dirt Road
Gravel Road
Paved Road
Storm Sewer
Sidewalk
Water
Sewer
Electric
Gas
Curb
Street Lights
Standard Utilities
Underground Utils.

Topography of Site
Level
Rolling
Low
High
Landscaped
Swamp
Wooded
Pond
Waterfront
Ravine
Wetland
Flood Plain

Who When What
GLA 05/03/2016 INSPECTION

Land Value Estimates for Land Table 4010.LAND VALUES

Description	Frontage	Depth	* Factors * Front	Depth	Rate	%Adj.	Reason	Value
ACREAGE			35.490 Acres		2,722	100		96,604
ROW			0.650 Acres		0	100		0
			36.14 Total Acres		Total Est. Land Value =			96,604

Land Improvement Cost Estimates

Description	Rate	Size	% Good	Cash Value
D/W/P: 4in Concrete	6.11	40	45	110
Wood Frame	18.03	1264	13	2,963
Total Estimated Land Improvements True Cash Value =				3,073

Year	Land Value	Building Value	Assessed Value	Board of Review	Tribunal/ Other	Taxable Value
2024	48,300	112,500	160,800			131,137C
2023	43,300	23,700	67,000			55,750C
2022	35,100	20,300	55,400			53,096C
2021	30,800	20,600	51,400			51,400S

*** Information herein deemed reliable but not guaranteed***

Building Type

X	Single Family
	Mobile Home
	Town Home
	Duplex
	A-Frame
X	Wood Frame

Building Style: PLAIN

Yr Built	Remodeled
0	0

Condition: Fair

Room List

	Basement
	1st Floor
	2nd Floor
	Bedrooms

(1) Exterior

	Wood/Shingle
X	Aluminum/Vinyl
	Brick
X	Insulation

(2) Windows

	Many		Large
X	Avg.	X	Avg.
	Few		Small

	Wood Sash
	Metal Sash
X	Vinyl Sash
	Double Hung
	Horiz. Slide
	Casement
	Double Glass
	Patio Doors
X	Storms & Screens

(3) Roof

X	Gable		Gambrel
	Hip		Mansard
	Flat		Shed

X	Asphalt Shingle

Chimney:

(3) Roof (cont.)

	Eavestrough
X	Insulation
0	Front Overhang
0	Other Overhang

(4) Interior

X	Drywall		Plaster
	Paneled		Wood T&G

Trim & Decoration

	Ex	X	Ord		Min

Size of Closets

	Lg	X	Ord		Small

Doors:		Solid	X	H.C.	

(5) Floors

Kitchen:
Other: Linoleum
Other: Carpeted

(6) Ceilings

X	Drywall

(7) Excavation

Basement: 0 S.F.
Crawl: 0 S.F.
Slab: 480 S.F.
Height to Joists: 0.0

(8) Basement

	Conc. Block
	Poured Conc.
	Stone
	Treated Wood
	Concrete Floor

(9) Basement Finish

	Recreation SF
	Living SF
	Walkout Doors (B)
	No Floor SF
	Walkout Doors (A)

(10) Floor Support

Joists:
Unsupported Len:
Cntr.Sup:

(11) Heating/Cooling

X	Gas		Oil		Elec.
	Wood		Coal		Steam

	Forced Air w/o Ducts
X	Forced Air w/ Ducts
	Forced Hot Water
	Electric Baseboard
	Elec. Ceil. Radiant
	Radiant (in-floor)
	Electric Wall Heat
	Space Heater
	Wall/Floor Furnace
	Forced Heat & Cool
	Heat Pump
	No Heating/Cooling

	Central Air
	Wood Furnace

(12) Electric

150	Amps Service

No./Qual. of Fixtures

	Ex.	X	Ord.		Min

No. of Elec. Outlets

	Many	X	Ave.		Few

(13) Plumbing

	Average Fixture(s)
1	3 Fixture Bath
	2 Fixture Bath
	Softener, Auto
	Softener, Manual
	Solar Water Heat
	No Plumbing
	Extra Toilet
	Extra Sink
	Separate Shower
	Ceramic Tile Floor
	Ceramic Tile Wains
	Ceramic Tub Alcove
	Vent Fan

(14) Water/Sewer

	Public Water
	Public Sewer
1	Water Well
1	1000 Gal Septic
	2000 Gal Septic

Lump Sum Items:

(15) Built-ins

	Appliance Allow.
	Cook Top
	Dishwasher
	Garbage Disposal
	Bath Heater
	Vent Fan
	Hot Tub
	Unvented Hood
	Vented Hood
	Intercom
	Jacuzzi Tub
	Jacuzzi repl.Tub
	Oven
	Microwave
	Standard Range
	Self Clean Range
	Sauna
	Trash Compactor
	Central Vacuum
	Security System

(15) Fireplaces

	Interior 1 Story
	Interior 2 Story
	2nd/Same Stack
	Two Sided
	Exterior 1 Story
	Exterior 2 Story
	Prefab 1 Story
	Prefab 2 Story
	Heat Circulator
	Raised Hearth
	Wood Stove
	Direct-Vented Gas

Class: D
Effec. Age: 45
Floor Area: 480
Total Base New : 76,044 E.C.F.
Total Depr Cost: 41,823 X 1.297
Estimated T.C.V: 54,244

(16) Porches/Decks

Area	Type
98	WGEP (1 Story)

(17) Garage

Year Built:
Car Capacity:
Class:
Exterior:
Brick Ven.:
Stone Ven.:
Common Wall:
Foundation:
Finished ?:
Auto. Doors:
Mech. Doors:
Area:
% Good:
Storage Area:
No Conc. Floor:

Bsmnt Garage:

Carport Area:
Roof:

Cost Est. for Res. Bldg: 1 Single Family PLAIN Cls D Blt 0
(11) Heating System: Forced Air w/ Ducts
Ground Area = 480 SF Floor Area = 480 SF.
Phy/Ab.Phy/Func/Econ/Comb. % Good=55/100/100/100/55
Building Areas

Stories	Exterior	Foundation	Size	Cost New	Depr. Cost
1 Story	Siding	Slab	480		
			Total:	58,138	31,975
Other Additions/Adjustments					
Water/Sewer					
1000 Gal Septic			1	4,293	2,361
Water Well, 100 Feet			1	5,545	3,050
Porches					
WGEP (1 Story)			98	8,068	4,437
			Totals:	76,044	41,823

Notes:

ECF (RESIDENTIAL) 1.297 => TCV: 54,244

*** Information herein deemed reliable but not guaranteed***

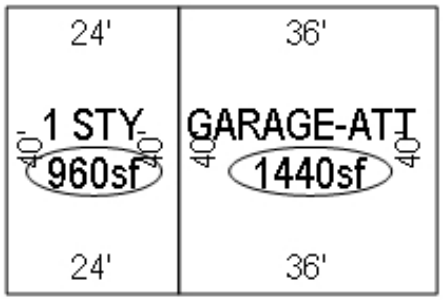

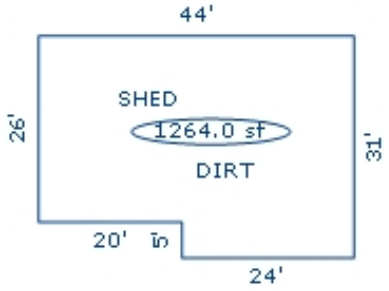

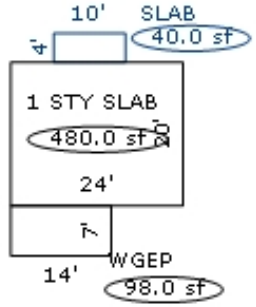

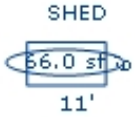

*** Information herein deemed reliable but not guaranteed***

Building Type

X	Single Family
	Mobile Home
	Town Home
	Duplex
	A-Frame
X	Wood Frame

Building Style: POLE BARN HOUSE

Yr Built	Remodeled
2023	0

Condition: Good

Room List

	Basement
	1st Floor
	2nd Floor
	Bedrooms

(1) Exterior

X	Wood/Shingle
	Aluminum/Vinyl
	Brick
X	Insulation

(2) Windows

X	Many Avg. Few	X	Large Avg. Small

	Wood Sash
	Metal Sash
X	Vinyl Sash
	Double Hung
	Horiz. Slide
	Casement
	Double Glass
	Patio Doors
X	Storms & Screens

(3) Roof

X	Gable		Gambrel
	Hip		Mansard
	Flat		Shed

X	Asphalt Shingle

Chimney:

(3) Roof (cont.)

	Eavestrough
X	Insulation
0	Front Overhang
0	Other Overhang

(4) Interior

X	Drywall		Plaster
	Paneled		Wood T&G

Trim & Decoration

	Ex	X	Ord		Min

Size of Closets

	Lg	X	Ord		Small

Doors:		Solid	X	H.C.	

(5) Floors

Kitchen:
Other: Linoleum
Other: Carpeted

(6) Ceilings

X	Drywall		

(7) Excavation

Basement: 0 S.F.
Crawl: 0 S.F.
Slab: 960 S.F.
Height to Joists: 0.0

(8) Basement

	Conc. Block
	Poured Conc.
	Stone
	Treated Wood
	Concrete Floor

(9) Basement Finish

	Recreation SF
	Living SF
	Walkout Doors (B)
	No Floor SF
	Walkout Doors (A)

(10) Floor Support

Joists:
Unsupported Len:
Cntr.Sup:

(11) Heating/Cooling

X	Gas		Oil		Elec.
	Wood		Coal		Steam

	Forced Air w/o Ducts
X	Forced Air w/ Ducts
	Forced Hot Water
	Electric Baseboard
	Elec. Ceil. Radiant
	Radiant (in-floor)
	Electric Wall Heat
	Space Heater
	Wall/Floor Furnace
	Forced Heat & Cool
	Heat Pump
	No Heating/Cooling

	Central Air
	Wood Furnace

(12) Electric

150	Amps Service

No./Qual. of Fixtures

	Ex.	X	Ord.		Min

No. of Elec. Outlets

	Many	X	Ave.		Few

(13) Plumbing

1	Average Fixture(s)
	3 Fixture Bath
	2 Fixture Bath
	Softener, Auto
	Softener, Manual
	Solar Water Heat
	No Plumbing
	Extra Toilet
	Extra Sink
	Separate Shower
	Ceramic Tile Floor
	Ceramic Tile Wains
	Ceramic Tub Alcove
	Vent Fan

(14) Water/Sewer

	Public Water
	Public Sewer
	Water Well
	1000 Gal Septic
	2000 Gal Septic

Lump Sum Items:

(15) Built-ins

	Appliance Allow.
	Cook Top
	Dishwasher
	Garbage Disposal
	Bath Heater
	Vent Fan
	Hot Tub
	Unvented Hood
	Vented Hood
	Intercom
	Jacuzzi Tub
	Jacuzzi repl.Tub
	Oven
	Microwave
	Standard Range
	Self Clean Range
	Sauna
	Trash Compactor
	Central Vacuum
	Security System

(15) Fireplaces

	Interior 1 Story
	Interior 2 Story
	2nd/Same Stack
	Two Sided
	Exterior 1 Story
	Exterior 2 Story
	Prefab 1 Story
	Prefab 2 Story
	Heat Circulator
	Raised Hearth
	Wood Stove
	Direct-Vented Gas

Class: D
Effec. Age: 1
Floor Area: 960
Total Base New : 130,552 E.C.F.
Total Depr Cost: 129,247 X 1.297
Estimated T.C.V: 167,633

(16) Porches/Decks

Area	Type

(17) Garage

Year Built: 2023
Car Capacity:
Class: D
Exterior: Pole
Brick Ven.: 0
Stone Ven.: 0
Common Wall: Detache
Foundation: 18 Inch
Finished ?:
Auto. Doors: 0
Mech. Doors: 0
Area: 1440
% Good: 0
Storage Area: 0
No Conc. Floor: 0

Bsmnt Garage:

Carport Area:
Roof:

Cost Est. for Res. Bldg: 2 Single Family POLE BARN HOUSE Cls D Blt 2023
(11) Heating System: Forced Air w/ Ducts
Ground Area = 960 SF Floor Area = 960 SF.
Phy/Ab.Phy/Func/Econ/Comb. % Good=99/100/100/100/99
Building Areas

Stories	Exterior	Foundation	Size	Cost New	Depr. Cost
1 Story	Siding	Slab	960		
			Total:	102,861	101,833

Other Additions/Adjustments
Garages
Class: D Exterior: Pole (Unfinished)

Base Cost	1440	27,691	27,414
	Totals:	130,552	129,247

Notes:
ECF (RESIDENTIAL) 1.297 => TCV: 167,633

*** Information herein deemed reliable but not guaranteed***

Parcel Number: 2410-13-2101 Jurisdiction: GREENWOOD TWP County: WEXFORD Printed on 02/15/2024

Grantor	Grantee	Sale Price	Sale Date	Inst. Type	Terms of Sale	Liber & Page	Verified By	Prcnt. Trans.

Property Address

Owner's Name/Address

WESTBROOK, RAMON
& LINDA
4709 E. MARSH RD.
KINGSLEY MI 49649

Tax Description

E 1/2 OF NW 1/4 78.79 A M/L GW. SEC. 13 T24N R10W -MANTON-

Comments/Influences

The Equalizer. Copyright (c) 1999 - 2009. Licensed To: Township of Greenwood, County of Wexford, Michigan

Class: RESIDENTIAL-VACANT Zoning:

School: MANTON CONSOLIDATED SCHOOLS

P.R.E. 0%

:

2024 Est TCV 198,339

Building Permit(s)	Date	Number	Status

Improved | X | Vacant

Public Improvements

Dirt Road
Gravel Road
Paved Road
Storm Sewer
Sidewalk
Water
Sewer
Electric
Gas
Curb
Street Lights
Standard Utilities
Underground Utils.

Topography of Site

Level
Rolling
Low
High
Landscaped
Swamp
Wooded
Pond
Waterfront
Ravine
Wetland
Flood Plain

Who When What

GLA 05/03/2016 INSPECTION

Land Value Estimates for Land Table 4010.LAND VALUES

Description	Frontage	Depth	* Factors * Front	Depth	Rate	%Adj.	Reason	Value
ACREAGE			77.810 Acres		2,549	100		198,339
ROW			0.980 Acres		0	100		0
			78.79 Total Acres		Total Est. Land Value =			198,339

Year	Land Value	Building Value	Assessed Value	Board of Review	Tribunal/ Other	Taxable Value
2024	99,200	0	99,200			34,191C
2023	84,600	0	84,600			32,563C
2022	66,100	0	66,100			31,013C
2021	60,600	0	60,600			30,023C

*** Information herein deemed reliable but not guaranteed***

Parcel Number: 2410-13-2201 Jurisdiction: GREENWOOD TWP County: WEXFORD Printed on 02/15/2024

Grantor	Grantee	Sale Price	Sale Date	Inst. Type	Terms of Sale	Liber & Page	Verified By	Prcnt. Trans.

Property Address

Owner's Name/Address

STATE OF MICHIGAN
P O BOX 30735
GRANTS ADMINISTRATION
LANSING MI 48909-8235

Tax Description

W 1/2 OF NW 1/4; W 1/2 OF SW 1/4; SE 1/4 OF SW 1/4; & S 1/2 OF SE 1/4 --280 A M/L-- GW. SEC. 13 T24N R10W -MANTON-

Comments/Influences

The Equalizer. Copyright (c) 1999 - 2009. Licensed To: Township of Greenwood, County of Wexford, Michigan

Class: AGRICULTURAL-VACAN Zoning:

School: MANTON CONSOLIDATED SCHOOLS

P.R.E. 0%

:

2024 Est TCV 0

Building Permit(s)	Date	Number	Status

Improved | X | Vacant

Public Improvements

Dirt Road
Gravel Road
Paved Road
Storm Sewer
Sidewalk
Water
Sewer
Electric
Gas
Curb
Street Lights
Standard Utilities
Underground Utils.

Topography of Site

Level
Rolling
Low
High
Landscaped
Swamp
Wooded
Pond
Waterfront
Ravine
Wetland
Flood Plain

Who When What

GLA 05/03/2016 INSPECTION

Land Value Estimates for Land Table 4010.LAND VALUES

Description	Frontage	Depth	* Factors * Front	Depth	Rate	%Adj.	Reason	Value
ACREAGE			272.000 Acres		2,480	100		674,560
ROW			8.000 Acres		0	100		0
			280.00 Total Acres		Total Est. Land Value =			674,560

Year	Land Value	Building Value	Assessed Value	Board of Review	Tribunal/ Other	Taxable Value
2024	EXEMPT	EXEMPT	EXEMPT			EXEMPT
2023	EXEMPT	EXEMPT	EXEMPT			EXEMPT
2022	0	0	0			0
2021	0	0	0			0

*** Information herein deemed reliable but not guaranteed***

Parcel Number: 2410-13-3101 Jurisdiction: GREENWOOD TWP County: WEXFORD Printed on 02/15/2024

Grantor	Grantee	Sale Price	Sale Date	Inst. Type	Terms of Sale	Liber & Page	Verified By	Prcnt. Trans.
HINES, DAVID C & AMY E TRU	HINES, DAVID C & AMY E	0	12/08/2022	QC	14-INTO/OUT OF TRUST	694/1225	DEED	0.0
HINES, DAVID CHRIS & AMY	HINES, DAVID C & AMY E TRU	0	05/03/2021	QC	14-INTO/OUT OF TRUST	690/421	AGENT	0.0
ANDERSON, DELORES TRUST	HINES,. DAVID CHRIS & AMY	126,000	02/28/2018	WD	03-ARM'S LENGTH	682/48	DEED	100.0

Property Address

9461 N 37 RD

Owner's Name/Address

HINES, DAVID C & AMY E
9461 N 37 RD
MANTON MI 49663

Tax Description

NE 1/4 OF SW 1/4 & S 66 FT OF N 1/2 OF N 1/2 OF SE 1/4 44 A. M/L GW. SEC. 13 T24N R10W -MANTON-

Comments/Influences

Class: RESIDENTIAL-IMPROV Zoning:

School: MANTON CONSOLIDATED SCHOOLS

P.R.E. 100% 08/06/2020

:

2024 Est TCV 603,864 TCV/TFA: 382.43

Building Permit(s)	Date	Number	Status
Pole Barn	11/01/2022	PB01-2022	ENTERED
Pole Barn	08/23/2022	PB22-0241	COMPLETE
Pole Barn	03/24/2021	PB21-0027	ENTERED
OTHER	10/09/2019	PB19-0234	RECHECK

X Improved | Vacant

Public Improvements

Dirt Road
Gravel Road
Paved Road
Storm Sewer
Sidewalk
Water
Sewer
Electric
Gas
Curb
Street Lights
Standard Utilities
Underground Utils.

Topography of Site

Level
Rolling
Low
High
Landscaped
Swamp
Wooded
Pond
Waterfront
Ravine
Wetland
Flood Plain

Land Value Estimates for Land Table 4010.LAND VALUES

Description	Frontage	Depth	* Factors * Front	Depth	Rate	%Adj.	Reason	Value
ACREAGE			43.940 Acres		2,722	100		119,605
ROW			0.060 Acres		0	100		0
			44.00 Total Acres		Total Est. Land Value =			119,605

Land Improvement Cost Estimates

Description	Rate	Size	% Good	Cash Value
D/W/P: 3.5 Concrete	6.63	96	0	0
Wood Frame	24.42	240	87	5,099
Total Estimated Land Improvements True Cash Value =				5,099

Who	When	What
DB	10/23/2023	INSPECTION
GLA	05/13/2021	INSPECTION
GLA	05/03/2016	INSPECTION

Year	Land Value	Building Value	Assessed Value	Board of Review	Tribunal/ Other	Taxable Value
2024	59,800	242,100	301,900			243,868C
2023	57,300	165,300	222,600			188,160C
2022	39,800	139,400	179,200			179,200S
2021	37,300	111,500	148,800			146,410C

The Equalizer. Copyright (c) 1999 - 2009. Licensed To: Township of Greenwood, County of Wexford, Michigan

*** Information herein deemed reliable but not guaranteed***

Building Type

X	Single Family
	Mobile Home
	Town Home
	Duplex
	A-Frame
X	Wood Frame

Building Style: PLAIN

Yr Built	Remodeled
0	0

Condition: Good

Room List

	Basement
	1st Floor
	2nd Floor
	Bedrooms

(1) Exterior

	Wood/Shingle
X	Aluminum/Vinyl
	Brick
X	Insulation

(2) Windows

X	Many Avg. Few		Large Avg. Small

	Wood Sash
	Metal Sash
X	Vinyl Sash
	Double Hung
	Horiz. Slide
	Casement
	Double Glass
	Patio Doors
X	Storms & Screens

(3) Roof

X	Gable		Gambrel
	Hip		Mansard
	Flat		Shed

X	Asphalt Shingle

Chimney:

(3) Roof (cont.)

	Eavestrough
X	Insulation
0	Front Overhang
0	Other Overhang

(4) Interior

X	Drywall Paneled		Plaster Wood T&G

Trim & Decoration

	Ex	X	Ord		Min

Size of Closets

	Lg	X	Ord		Small

Doors: | | Solid | X | H.C.

(5) Floors

Kitchen:
Other: Linoleum
Other: Carpeted

(6) Ceilings

X	Drywall		

(7) Excavation

Basement: 1579 S.F.
Crawl: 0 S.F.
Slab: 0 S.F.
Height to Joists: 0.0

(8) Basement

	Conc. Block
	Poured Conc.
	Stone
	Treated Wood
	Concrete Floor

(9) Basement Finish

	Recreation SF
	Living SF
	Walkout Doors (B)
	No Floor SF
	Walkout Doors (A)

(10) Floor Support

Joists:
Unsupported Len:
Cntr.Sup:

(11) Heating/Cooling

X	Gas Wood		Oil Coal		Elec. Steam

	Forced Air w/o Ducts
	Forced Air w/ Ducts
	Forced Hot Water
	Electric Baseboard
	Elec. Ceil. Radiant
	Radiant (in-floor)
	Electric Wall Heat
	Space Heater
	Wall/Floor Furnace
X	Forced Heat & Cool
	Heat Pump
	No Heating/Cooling
	Central Air
	Wood Furnace

(12) Electric

150	Amps Service

No./Qual. of Fixtures

	Ex.	X	Ord.		Min

No. of Elec. Outlets

	Many	X	Ave.		Few

(13) Plumbing

	Average Fixture(s)
2	3 Fixture Bath
	2 Fixture Bath
	Softener, Auto
	Softener, Manual
	Solar Water Heat
	No Plumbing
	Extra Toilet
	Extra Sink
	Separate Shower
	Ceramic Tile Floor
	Ceramic Tile Wains
	Ceramic Tub Alcove
	Vent Fan

(14) Water/Sewer

	Public Water
	Public Sewer
1	Water Well
1	1000 Gal Septic
	2000 Gal Septic

Lump Sum Items:

(15) Built-ins

	Appliance Allow.
	Cook Top
	Dishwasher
	Garbage Disposal
	Bath Heater
	Vent Fan
	Hot Tub
	Unvented Hood
	Vented Hood
	Intercom
	Jacuzzi Tub
	Jacuzzi repl.Tub
	Oven
	Microwave
	Standard Range
	Self Clean Range
	Sauna
	Trash Compactor
	Central Vacuum
	Security System

(15) Fireplaces

	Interior 1 Story
	Interior 2 Story
	2nd/Same Stack
	Two Sided
	Exterior 1 Story
	Exterior 2 Story
	Prefab 1 Story
	Prefab 2 Story
	Heat Circulator
	Raised Hearth
	Wood Stove
	Direct-Vented Gas

Class: C
Effec. Age: 5
Floor Area: 1,579
Total Base New : 398,849 E.C.F.
Total Depr Cost: 369,437 X 1.297
Estimated T.C.V: 479,160

(16) Porches/Decks

Area	Type
230	WPP
96	4in Concrete
230	CCP (1 Story)
600	CCP (1 Story)
142	CCP (1 Story)
1388	CCP (1 Story)

(17) Garage

Year Built:
Car Capacity:
Class: D
Exterior: Pole
Brick Ven.: 0
Stone Ven.: 0
Common Wall: Detache
Foundation: 18 Inch
Finished ?:
Auto. Doors: 0
Mech. Doors: 0
Area: 2400
% Good: 75
Storage Area: 0
No Conc. Floor: 0

Bsmnt Garage:

Carport Area:
Roof:

Cost Est. for Res. Bldg: 1 Single Family PLAIN Cls C Blt 0
(11) Heating System: Forced Heat & Cool
Ground Area = 1579 SF Floor Area = 1579 SF.
Phy/Ab.Phy/Func/Econ/Comb. % Good=95/100/100/100/95
Building Areas

Stories	Exterior	Foundation	Size	Cost New	Depr. Cost	
1 Story	Siding	Basement	1,579			
			Total:	232,789	221,149	
Other Additions/Adjustments						
Plumbing						
3 Fixture Bath			1	4,678	4,444	
Water/Sewer						
1000 Gal Septic			1	4,899	4,654	
Water Well, 100 Feet			1	5,849	5,557	
Porches						
WPP			230	4,862	4,619	
CCP (1 Story)			230	5,971	5,672	
CCP (1 Story)			600	14,742	14,005	
CCP (1 Story)			142	3,905	3,710	
CCP (1 Story)			1388	40,363	38,345	
4in Concrete			96	791	751	
Garages						
Class: D Exterior: Pole (Unfinished)						
Base Cost			2400	46,152	34,614	*7
Class: D Exterior: Pole (Unfinished)						
Base Cost			1232	23,691	22,506	
Local Cost Items						
WOOD LEAN TO			600	3,660	3,514	*9
WOOD LEAN TO DIRT			720	3,096	2,632	*8
SHED			436	3,401	3,265	*9

<<<<< Calculations too long. See Valuation printout for complete pricing. >>>>>

*** Information herein deemed reliable but not guaranteed***

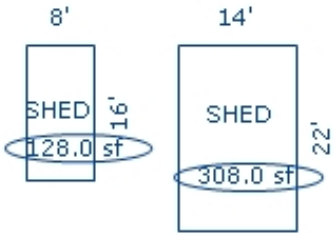

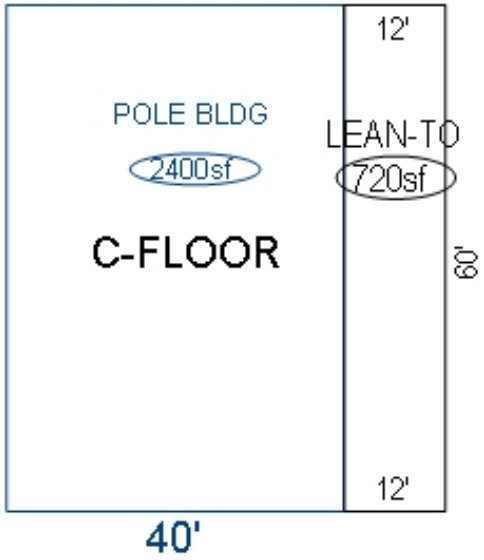

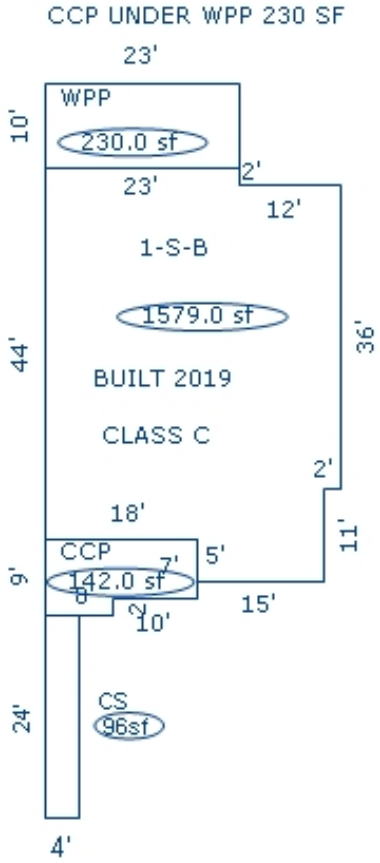

*** Information herein deemed reliable but not guaranteed***

Parcel Number: 2410-13-4104 Jurisdiction: GREENWOOD TWP County: WEXFORD Printed on 02/15/2024

Grantor	Grantee	Sale Price	Sale Date	Inst. Type	Terms of Sale	Liber & Page	Verified By	Prcnt. Trans.
HIPPS, ROBERT A II & DORIS	VANLENTE, DAVID & JOANN M	60,000	11/08/2016	WD	03-ARM'S LENGTH	678 /2587	DEED	100.0
HIPPS, ROBERT A. & CLARA M	HIPPS, ROBERT A II & DORIS	0	12/07/2011	QC	09-FAMILY	644/1891	DEED	0.0
HIPPS, ROBERT A II & DORIS	HIPPS, ROBERT A. II & DORI	0	07/05/1998	QC	09-FAMILY	311/733	DEED	0.0
YASIN, THOMAS P.	HIPPS, ROBERT A.	13,000	09/26/1987	WD	03-ARM'S LENGTH	308:306	DEED	0.0

Property Address

9307 N 37 RD

Owner's Name/Address

VANLENTE, DAVID & JOANN M
9307 N 37 RD
MANTON MI 49663

Tax Description

S 1/2 OF N 1/2 OF SE 1/4 40 A. GW. SEC. 13 T24N R10W -MANTON-

Comments/Influences

Class: RESIDENTIAL-IMPROV Zoning:

School: MANTON CONSOLIDATED SCHOOLS

P.R.E. 100% 12/10/2020

:

2024 Est TCV 559,213 TCV/TFA: 258.89

Building Permit(s)	Date	Number	Status
Foundation	02/02/2010	PB19-0026	COMPLETE

X	Improved		Vacant

	Public Improvements
	Dirt Road
X	Gravel Road
	Paved Road
	Storm Sewer
	Sidewalk
	Water
	Sewer
X	Electric
	Gas
	Curb
	Street Lights
	Standard Utilities
	Underground Utils.

	Topography of Site
X	Level
X	Rolling
	Low
	High
	Landscaped
	Swamp
	Wooded
	Pond
	Waterfront
	Ravine
	Wetland
	Flood Plain

Who	When	What
GLA	05/13/2021	INSPECTION
LM	10/28/2011	APPR INSPE
GLA	05/03/2016	INSPECTION

Land Value Estimates for Land Table 4010.LAND VALUES

Description	Frontage	Depth	* Factors * Front	Depth	Rate	%Adj.	Reason	Value
ACREAGE			38.320 Acres		2,722	100		104,307
ROW			0.510 Acres		0	100		0
			38.83 Total Acres				Total Est. Land Value =	104,307

Land Improvement Cost Estimates

Description	Rate	Size	% Good	Cash Value
D/W/P: 4in Concrete	6.11	728	89	3,959
Total Estimated Land Improvements True Cash Value =				3,959

Year	Land Value	Building Value	Assessed Value	Board of Review	Tribunal/ Other	Taxable Value
2024	52,200	227,400	279,600			216,842C
2023	46,200	195,000	241,200	231,600M		206,517C
2022	36,900	164,100	201,000			196,683C
2021	32,800	157,600	190,400			190,400S

The Equalizer. Copyright (c) 1999 - 2009.
Licensed To: Township of Greenwood, County of Wexford, Michigan

*** Information herein deemed reliable but not guaranteed***

Building Type

X	Single Family
	Mobile Home
	Town Home
	Duplex
	A-Frame
X	Wood Frame

Building Style: PLAIN

Yr Built	Remodeled
2019	0

Condition: Good

Room List

	Basement
	1st Floor
	2nd Floor
	Bedrooms

(1) Exterior

	Wood/Shingle
X	Aluminum/Vinyl
	Brick
X	Insulation

(2) Windows

X	Many		Large
	Avg.	X	Avg.
	Few		Small

	Wood Sash
	Metal Sash
X	Vinyl Sash
	Double Hung
	Horiz. Slide
	Casement
	Double Glass
	Patio Doors
X	Storms & Screens

(3) Roof

X	Gable		Gambrel
	Hip		Mansard
	Flat		Shed

X	Asphalt Shingle

Chimney:

(3) Roof (cont.)

	Eavestrough
X	Insulation
0	Front Overhang
0	Other Overhang

(4) Interior

X	Drywall		Plaster
	Paneled		Wood T&G

Trim & Decoration

	Ex	X	Ord		Min

Size of Closets

	Lg	X	Ord		Small

Doors:		Solid	X	H.C.	

(5) Floors

Kitchen:
Other: Linoleum
Other: Carpeted

(6) Ceilings

X	Drywall		

(7) Excavation

Basement: 2160 S.F.
Crawl: 0 S.F.
Slab: 0 S.F.
Height to Joists: 0.0

(8) Basement

	Conc. Block
	Poured Conc.
	Stone
	Treated Wood
	Concrete Floor

(9) Basement Finish

	Recreation SF
	Living SF
	Walkout Doors (B)
	No Floor SF
	Walkout Doors (A)

(10) Floor Support

Joists:
Unsupported Len:
Cntr.Sup:

(11) Heating/Cooling

X	Gas		Oil		Elec.
	Wood		Coal		Steam

	Forced Air w/o Ducts
	Forced Air w/ Ducts
	Forced Hot Water
	Electric Baseboard
	Elec. Ceil. Radiant
	Radiant (in-floor)
	Electric Wall Heat
	Space Heater
	Wall/Floor Furnace
X	Forced Heat & Cool
	Heat Pump
	No Heating/Cooling

	Central Air
	Wood Furnace

(12) Electric

150	Amps Service

No./Qual. of Fixtures

	Ex.	X	Ord.		Min

No. of Elec. Outlets

	Many	X	Ave.		Few

(13) Plumbing

	Average Fixture(s)
2	3 Fixture Bath
	2 Fixture Bath
	Softener, Auto
	Softener, Manual
	Solar Water Heat
	No Plumbing
	Extra Toilet
	Extra Sink
	Separate Shower
	Ceramic Tile Floor
	Ceramic Tile Wains
	Ceramic Tub Alcove
	Vent Fan

(14) Water/Sewer

	Public Water
	Public Sewer
1	Water Well
1	1000 Gal Septic
	2000 Gal Septic

Lump Sum Items:

(15) Built-ins

	Appliance Allow.
	Cook Top
	Dishwasher
	Garbage Disposal
	Bath Heater
	Vent Fan
	Hot Tub
	Unvented Hood
	Vented Hood
	Intercom
	Jacuzzi Tub
	Jacuzzi repl.Tub
	Oven
	Microwave
	Standard Range
	Self Clean Range
	Sauna
	Trash Compactor
	Central Vacuum
	Security System

(15) Fireplaces

	Interior 1 Story
	Interior 2 Story
	2nd/Same Stack
	Two Sided
	Exterior 1 Story
	Exterior 2 Story
	Prefab 1 Story
	Prefab 2 Story
	Heat Circulator
	Raised Hearth
	Wood Stove
	Direct-Vented Gas

Class: C
Effec. Age: 5
Floor Area: 2,160
Total Base New : 365,986 E.C.F.
Total Depr Cost: 347,685 X 1.297
Estimated T.C.V: 450,947

(16) Porches/Decks

Area	Type
21	Treated Wood
192	Treated Wood

(17) Garage

Year Built:
Car Capacity:
Class: C
Exterior: Siding
Brick Ven.: 0
Stone Ven.: 0
Common Wall: Detache
Foundation: 42 Inch
Finished ?: Yes
Auto. Doors: 0
Mech. Doors: 0
Area: 800
% Good: 0
Storage Area: 0
No Conc. Floor: 0

Bsmnt Garage:

Carport Area:
Roof:

Cost Est. for Res. Bldg: 1 Single Family PLAIN Cls C Blt 2019
(11) Heating System: Forced Heat & Cool
Ground Area = 2160 SF Floor Area = 2160 SF.
Phy/Ab.Phy/Func/Econ/Comb. % Good=95/100/100/100/95
Building Areas

Stories	Exterior	Foundation	Size	Cost New	Depr. Cost
1 Story	Siding	Basement	2,160		
			Total:	305,189	289,928
Other Additions/Adjustments					
Plumbing					
3 Fixture Bath			1	4,678	4,444
Water/Sewer					
1000 Gal Septic			1	4,899	4,654
Water Well, 100 Feet			1	5,849	5,557
Deck					
Treated Wood			192	4,057	3,854
Treated Wood w/Roof (Deck Portion)			21	966	918
Treated Wood w/Roof (Roof portion)			21	476	452
Garages					
Class: C Exterior: Siding Foundation: 42 Inch (Finished)					
Base Cost			800	38,000	36,100
Local Cost Items					
SHED			240	1,872	1,778
			Totals:	365,986	347,685

Notes:

ECF (RESIDENTIAL) 1.297 => TCV: 450,947

*** Information herein deemed reliable but not guaranteed***

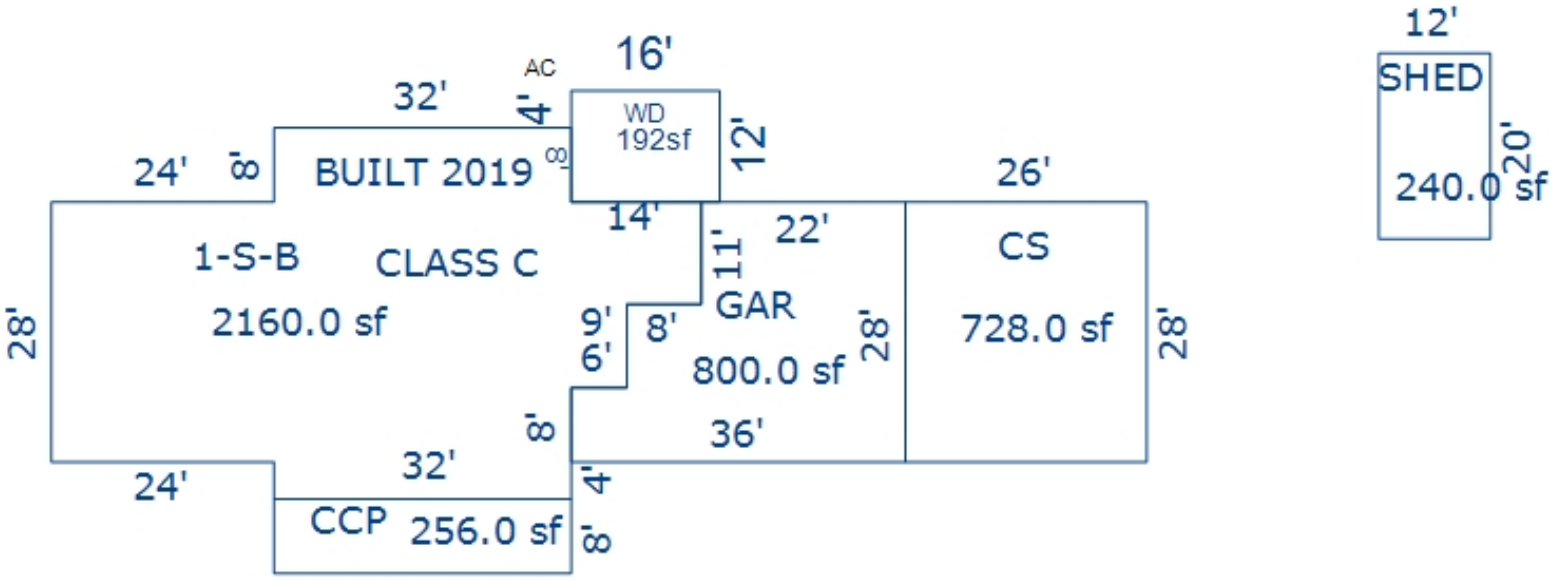

*** Information herein deemed reliable but not guaranteed***

Parcel Number: 2410-14-1101 Jurisdiction: GREENWOOD TWP County: WEXFORD Printed on 02/15/2024

Grantor	Grantee	Sale Price	Sale Date	Inst. Type	Terms of Sale	Liber & Page	Verified By	Prcnt. Trans.
WHITE, GLENN A.	TIGCHELAAR ET AL, CLYDE	20,000	10/01/1993	WD	03-ARM'S LENGTH	337:941	DEED	0.0

Property Address

Owner's Name/Address

TIGCHELAAR, CHRISTY L
& KATHERINE R DOLFMAN
P O BOX 407
DELTON MI 49046

Tax Description

NE 1/4 OF NE 1/4 40 A. GW. SEC. 14 T24N R10W -MANTON-

Comments/Influences

The Equalizer. Copyright (c) 1999 - 2009. Licensed To: Township of Greenwood, County of Wexford, Michigan

Class: RESIDENTIAL-IMPROV Zoning:

School: MANTON CONSOLIDATED SCHOOLS

P.R.E. 0%

:

2024 Est TCV 121,233 TCV/TFA: 757.71

Building Permit(s)	Date	Number	Status

X Improved | Vacant

	Public Improvements
X	Dirt Road
X	Gravel Road
	Paved Road
	Storm Sewer
	Sidewalk
	Water
	Sewer
	Electric
	Gas
	Curb
	Street Lights
	Standard Utilities
	Underground Utils.

	Topography of Site
X	Level
X	Rolling
	Low
	High
	Landscaped
	Swamp
X	Wooded
	Pond
	Waterfront
	Ravine
	Wetland
	Flood Plain
X	OPEN/PINES

Who	When	What
GLA	05/03/2016	INSPECTION

Land Value Estimates for Land Table 4010.LAND VALUES

Description	Frontage	Depth	* Factors * Front	Depth	Rate	%Adj.	Reason	Value
ACREAGE			38.000 Acres		2,722	100		103,436
ROW			2.000 Acres		0	100		0
			40.00 Total Acres		Total Est. Land Value =			103,436

Year	Land Value	Building Value	Assessed Value	Board of Review	Tribunal/ Other	Taxable Value
2024	51,700	8,900	60,600			19,177C
2023	45,900	7,200	53,100			18,264C
2022	36,700	6,000	42,700			17,395C
2021	32,600	5,100	37,700			16,840C

*** Information herein deemed reliable but not guaranteed***

Building Type

	Single Family
X	Mobile Home
	Town Home
	Duplex
	A-Frame

X	Wood Frame

Building Style: SWT/DWT

Yr Built	Remodeled
0	0

Condition: Good

Room List

	Basement
	1st Floor
	2nd Floor
	Bedrooms

(1) Exterior

	Wood/Shingle
X	Aluminum/Vinyl
	Brick
X	Insulation

(2) Windows

	Many		Large
X	Avg.	X	Avg.
	Few		Small

	Wood Sash
	Metal Sash
X	Vinyl Sash
	Double Hung
	Horiz. Slide
	Casement
	Double Glass
	Patio Doors
X	Storms & Screens

(3) Roof

X	Gable		Gambrel
	Hip		Mansard
	Flat		Shed

X	Asphalt Shingle

Chimney:

(3) Roof (cont.)

	Eavestrough
X	Insulation
0	Front Overhang
0	Other Overhang

(4) Interior

X	Drywall		Plaster
	Paneled		Wood T&G

Trim & Decoration

	Ex	X	Ord		Min

Size of Closets

	Lg	X	Ord		Small

Doors:		Solid	X	H.C.	

(5) Floors

Kitchen:
Other: Linoleum
Other: Carpeted

(6) Ceilings

X	Drywall		

(7) Excavation

Basement: 0 S.F.
Crawl: 0 S.F.
Slab: 0 S.F.
Height to Joists: 0.0

(8) Basement

	Conc. Block
	Poured Conc.
	Stone
	Treated Wood
	Concrete Floor

(9) Basement Finish

	Recreation SF
	Living SF
	Walkout Doors (B)
	No Floor SF
	Walkout Doors (A)

(10) Floor Support

Joists:
Unsupported Len:
Cntr.Sup:

(11) Heating/Cooling

X	Gas		Oil		Elec.
	Wood		Coal		Steam

X	Forced Warm Air
	Wall Furnace
	Warm & Cool Air
	Heat Pump

	Central Air
	Wood Furnace

(12) Electric

150	Amps Service

No./Qual. of Fixtures

	Ex.	X	Ord.		Min

No. of Elec. Outlets

	Many	X	Ave.		Few

(13) Plumbing

1	Average Fixture(s)
	3 Fixture Bath
	2 Fixture Bath
	Softener, Auto
	Softener, Manual
	Solar Water Heat
	No Plumbing
	Extra Toilet
	Extra Sink
	Separate Shower
	Ceramic Tile Floor
	Ceramic Tile Wains
	Ceramic Tub Alcove
	Vent Fan

(14) Water/Sewer

	Public Water
	Public Sewer
1	Water Well
	1000 Gal Septic
	2000 Gal Septic

Lump Sum Items:

(15) Built-ins

	Appliance Allow.
	Cook Top
	Dishwasher
	Garbage Disposal
	Bath Heater
	Vent Fan
	Hot Tub
	Unvented Hood
	Vented Hood
	Intercom
	Jacuzzi Tub
	Jacuzzi repl.Tub
	Oven
	Microwave
	Standard Range
	Self Clean Range
	Sauna
	Trash Compactor
	Central Vacuum
	Security System

(15) Fireplaces

	Interior 1 Story
	Interior 2 Story
	2nd/Same Stack
	Two Sided
	Exterior 1 Story
	Exterior 2 Story
	Prefab 1 Story
	Prefab 2 Story
	Heat Circulator
	Raised Hearth
	Wood Stove
	Direct-Vented Gas

Class: Fair
Effec. Age: 25
Floor Area:
Total Base New : 39,208 E.C.F.
Total Depr Cost: 13,722 X 1.297
Estimated T.C.V: 17,797

(16) Porches/Decks

Area	Type
96	WPP
288	WGEP (1 Story)

(17) Garage

Year Built:
Car Capacity:
Class:
Exterior:
Brick Ven.:
Stone Ven.:
Common Wall:
Foundation:
Finished ?:
Auto. Doors:
Mech. Doors:
Area:
% Good:
Storage Area:
No Conc. Floor:

Bsmnt Garage:

Carport Area:
Roof:

Cost Est. for Res. Bldg: 1 Mobile Home SWT/DWT Cls Fair Blt 0
(11) Heating System: Forced Warm Air
Ground Area = 160 SF Floor Area = 160 SF.
Phy/Ab.Phy/Func/Econ/Comb. % Good=35/100/100/100/35
Building Areas

Type	Ext. Walls	Roof/Fnd.	Size	Cost New	Depr. Cost
Main Home	Ribbed	Metal	160		
Expando			44		
			Total:	16,011	5,604
Other Additions/Adjustments					
Porches					
WPP			96	2,590	906
WGEP (1 Story)			288	14,927	5,224
Water/Sewer					
Water Well, 100 Feet			1	5,680	1,988
			Totals:	39,208	13,722

Notes:
ECF (RESIDENTIAL) 1.297 => TCV: 17,797

*** Information herein deemed reliable but not guaranteed***

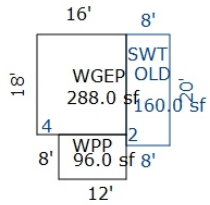

Sketch by Apex Sketch

*** Information herein deemed reliable but not guaranteed***

Parcel Number: 2410-14-1201 Jurisdiction: GREENWOOD TWP County: WEXFORD Printed on 02/15/2024

Grantor	Grantee	Sale Price	Sale Date	Inst. Type	Terms of Sale	Liber & Page	Verified By	Prcnt. Trans.

Property Address	Class: RESIDENTIAL-IMPROV	Zoning:	Building Permit(s)	Date	Number	Status
4636 E 6 RD	School: MANTON CONSOLIDATED SCHOOLS					
Owner's Name/Address	P.R.E. 0%					
	:					
GARBRECHT, TERRY R. & ALICE 4148 E 10 RD MANTON MI 49663	2024 Est TCV 172,686 TCV/TFA: 61.89					

X Improved | Vacant

Tax Description

NW 1/4 OF NE 1/4 40 A. GW. SEC. 14 T24N R10W -MANTON-

Comments/Influences

The Equalizer. Copyright (c) 1999 - 2009. Licensed To: Township of Greenwood, County of Wexford, Michigan

	Public Improvements
	Dirt Road
X	Gravel Road
	Paved Road
	Storm Sewer
	Sidewalk
	Water
	Sewer
	Electric
	Gas
	Curb
	Street Lights
	Standard Utilities
	Underground Utils.

	Topography of Site
X	Level
X	Rolling
	Low
	High
	Landscaped
	Swamp
X	Wooded
	Pond
	Waterfront
	Ravine
	Wetland
	Flood Plain
X	OPEN/PINES

Who	When	What
GLA	05/03/2016	INSPECTION

Land Value Estimates for Land Table 4010.LAND VALUES

Description	Frontage	Depth	* Factors * Front	Depth	Rate	%Adj.	Reason	Value
ACREAGE			39.010 Acres		2,722	100		106,185
ROW			0.990 Acres		0	100		0
			40.00 Total Acres		Total Est. Land Value =			106,185

Land Improvement Cost Estimates

Description	Rate	Size	% Good	Cash Value
D/W/P: 4in Concrete	6.11	24	45	66
Total Estimated Land Improvements True Cash Value =				66

Year	Land Value	Building Value	Assessed Value	Board of Review	Tribunal/ Other	Taxable Value
2024	53,100	33,200	86,300			28,186C
2023	47,000	26,700	73,700			26,844C
2022	37,400	22,200	59,600			25,566C
2021	33,300	21,700	55,000			24,750C

*** Information herein deemed reliable but not guaranteed***

Building Type

X	Single Family
	Mobile Home
	Town Home
	Duplex
	A-Frame
X	Wood Frame

Building Style: PLAIN

Yr Built	Remodeled
0	1958

Condition: Good
Part. Construct.: 50%

Room List

	Basement
	1st Floor
	2nd Floor
	Bedrooms

(1) Exterior

X	Wood/Shingle
	Aluminum/Vinyl
	Brick
X	Insulation

(2) Windows

	Many		Large
X	Avg.	X	Avg.
	Few		Small

X	Wood Sash
	Metal Sash
	Vinyl Sash
	Double Hung
	Horiz. Slide
	Casement
	Double Glass
	Patio Doors
X	Storms & Screens

(3) Roof

X	Gable		Gambrel
	Hip		Mansard
	Flat		Shed

X	Asphalt Shingle

Chimney:

(3) Roof (cont.)

	Eavestrough
X	Insulation
0	Front Overhang
0	Other Overhang

(4) Interior

X	Drywall		Plaster
	Paneled		Wood T&G

Trim & Decoration

	Ex	X	Ord		Min

Size of Closets

	Lg	X	Ord		Small

Doors:		Solid	X	H.C.	

(5) Floors

Kitchen:
Other: Linoleum
Other: Carpeted

(6) Ceilings

X	Drywall		

(7) Excavation

Basement: 0 S.F.
Crawl: 0 S.F.
Slab: 960 S.F.
Height to Joists: 0.0

(8) Basement

	Conc. Block
	Poured Conc.
	Stone
	Treated Wood
	Concrete Floor

(9) Basement Finish

	Recreation SF
	Living SF
	Walkout Doors (B)
	No Floor SF
	Walkout Doors (A)

(10) Floor Support

Joists:
Unsupported Len:
Cntr.Sup:

(11) Heating/Cooling

X	Gas		Oil		Elec.
	Wood		Coal		Steam

	Forced Air w/o Ducts
X	Forced Air w/ Ducts
	Forced Hot Water
	Electric Baseboard
	Elec. Ceil. Radiant
	Radiant (in-floor)
	Electric Wall Heat
	Space Heater
	Wall/Floor Furnace
	Forced Heat & Cool
	Heat Pump
	No Heating/Cooling

	Central Air
	Wood Furnace

(12) Electric

100	Amps Service

No./Qual. of Fixtures

	Ex.	X	Ord.		Min

No. of Elec. Outlets

	Many	X	Ave.		Few

(13) Plumbing

1	Average Fixture(s)
	3 Fixture Bath
	2 Fixture Bath
	Softener, Auto
	Softener, Manual
	Solar Water Heat
	No Plumbing
	Extra Toilet
	Extra Sink
	Separate Shower
	Ceramic Tile Floor
	Ceramic Tile Wains
	Ceramic Tub Alcove
	Vent Fan

(14) Water/Sewer

	Public Water
	Public Sewer
1	Water Well
	1000 Gal Septic
	2000 Gal Septic

Lump Sum Items:

(15) Built-ins

	Appliance Allow.
	Cook Top
	Dishwasher
	Garbage Disposal
	Bath Heater
	Vent Fan
	Hot Tub
	Unvented Hood
	Vented Hood
	Intercom
	Jacuzzi Tub
	Jacuzzi repl.Tub
	Oven
	Microwave
	Standard Range
	Self Clean Range
	Sauna
	Trash Compactor
	Central Vacuum
	Security System

(15) Fireplaces

	Interior 1 Story
	Interior 2 Story
	2nd/Same Stack
	Two Sided
	Exterior 1 Story
	Exterior 2 Story
	Prefab 1 Story
	Prefab 2 Story
	Heat Circulator
	Raised Hearth
	Wood Stove
	Direct-Vented Gas

Class: D -20
Effec. Age: 65
Floor Area: 1,680
Total Base New : 132,124 E.C.F.
Total Depr Cost: 47,547 X 1.297
Estimated T.C.V: 61,668

(16) Porches/Decks

Area	Type

(17) Garage

Year Built:
Car Capacity:
Class:
Exterior:
Brick Ven.:
Stone Ven.:
Common Wall:
Foundation:
Finished ?:
Auto. Doors:
Mech. Doors:
Area:
% Good:
Storage Area:
No Conc. Floor:

Bsmnt Garage:

Carport Area:
Roof:

Cost Est. for Res. Bldg: 1 Single Family PLAIN Cls D-20 Blt 0
(11) Heating System: Forced Air w/ Ducts
Ground Area = 960 SF Floor Area = 1680 SF.
Phy/Ab.Phy/Func/Econ/Comb. % Good=45/100/80/100/36
Building Areas

Stories	Exterior	Foundation	Size	Cost New	Depr. Cost
1.75 Story	Siding	Slab	960		
			Total:	126,579	45,551

Other Additions/Adjustments
Water/Sewer

Water Well, 100 Feet	1	5,545	1,996
	Totals:	132,124	47,547

Notes:

ECF (RESIDENTIAL) 1.297 => TCV: 61,668
50% Completed => Est. True Cash Value 2024 =

*** Information herein deemed reliable but not guaranteed***

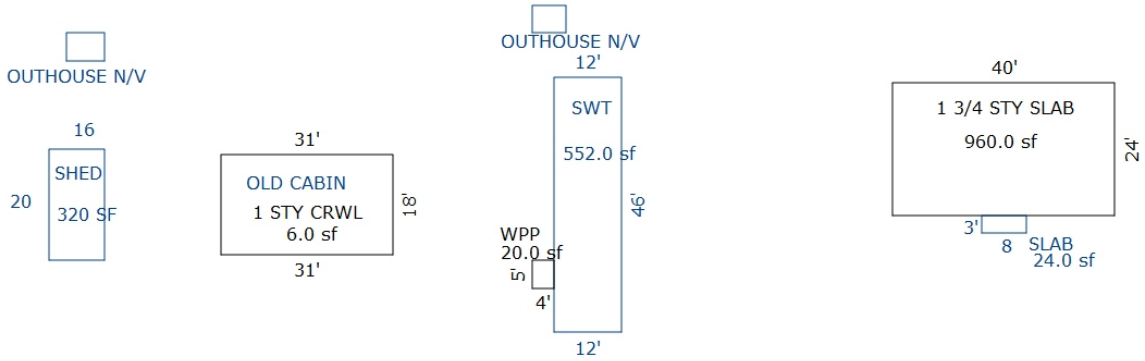

Sketch by Apex Sketch

*** Information herein deemed reliable but not guaranteed***

Building Type

	Single Family
X	Mobile Home
	Town Home
	Duplex
	A-Frame

X	Wood Frame

Building Style: SWT/DWT

Yr Built	Remodeled
0	0

Condition: Good

Room List

	Basement
	1st Floor
	2nd Floor
	Bedrooms

(1) Exterior

	Wood/Shingle
	Aluminum/Vinyl
X	Brick
X	Insulation

(2) Windows

	Many		Large
X	Avg.	X	Avg.
	Few		Small

	Wood Sash
	Metal Sash
X	Vinyl Sash
	Double Hung
	Horiz. Slide
	Casement
	Double Glass
	Patio Doors
X	Storms & Screens

(3) Roof

X	Gable		Gambrel
	Hip		Mansard
	Flat		Shed

X	Asphalt Shingle

Chimney:

(3) Roof (cont.)

	Eavestrough
X	Insulation
0	Front Overhang
0	Other Overhang

(4) Interior

X	Drywall		Plaster
	Paneled		Wood T&G

Trim & Decoration

	Ex	X	Ord		Min

Size of Closets

	Lg	X	Ord		Small

Doors:		Solid	X	H.C.	

(5) Floors

Kitchen:
Other: Linoleum
Other: Carpeted

(6) Ceilings

X	Drywall		

(7) Excavation

Basement: 0 S.F.
Crawl: 0 S.F.
Slab: 0 S.F.
Height to Joists: 0.0

(8) Basement

	Conc. Block
	Poured Conc.
	Stone
	Treated Wood
	Concrete Floor

(9) Basement Finish

	Recreation SF
	Living SF
	Walkout Doors (B)
	No Floor SF
	Walkout Doors (A)

(10) Floor Support

Joists:
Unsupported Len:
Cntr.Sup:

(11) Heating/Cooling

X	Gas		Oil		Elec.
	Wood		Coal		Steam

X	Forced Warm Air
	Wall Furnace
	Warm & Cool Air
	Heat Pump

	Central Air
	Wood Furnace

(12) Electric

150	Amps Service

No./Qual. of Fixtures

	Ex.	X	Ord.		Min

No. of Elec. Outlets

	Many	X	Ave.		Few

(13) Plumbing

1	Average Fixture(s)
	3 Fixture Bath
	2 Fixture Bath
	Softener, Auto
	Softener, Manual
	Solar Water Heat
	No Plumbing
	Extra Toilet
	Extra Sink
	Separate Shower
	Ceramic Tile Floor
	Ceramic Tile Wains
	Ceramic Tub Alcove
	Vent Fan

(14) Water/Sewer

	Public Water
	Public Sewer
	Water Well
	1000 Gal Septic
	2000 Gal Septic

Lump Sum Items:

(15) Built-ins

	Appliance Allow.
	Cook Top
	Dishwasher
	Garbage Disposal
	Bath Heater
	Vent Fan
	Hot Tub
	Unvented Hood
	Vented Hood
	Intercom
	Jacuzzi Tub
	Jacuzzi repl.Tub
	Oven
	Microwave
	Standard Range
	Self Clean Range
	Sauna
	Trash Compactor
	Central Vacuum
	Security System

(15) Fireplaces

	Interior 1 Story
	Interior 2 Story
	2nd/Same Stack
	Two Sided
	Exterior 1 Story
	Exterior 2 Story
	Prefab 1 Story
	Prefab 2 Story
	Heat Circulator
	Raised Hearth
	Wood Stove
	Direct-Vented Gas

Class: Low
Effec. Age: 25
Floor Area:
Total Base New : 32,461 E.C.F.
Total Depr Cost: 9,088 X 1.297
Estimated T.C.V: 11,787

(16) Porches/Decks

Area	Type
20	Treated Wood

(17) Garage

Year Built:
Car Capacity:
Class:
Exterior:
Brick Ven.:
Stone Ven.:
Common Wall:
Foundation:
Finished ?:
Auto. Doors:
Mech. Doors:
Area:
% Good:
Storage Area:
No Conc. Floor:

Bsmnt Garage:

Carport Area:
Roof:

Cost Est. for Res. Bldg: 2 Mobile Home SWT/DWT Cls Low Blt 0
(11) Heating System: Wall Furnace
Ground Area = 552 SF Floor Area = 552 SF.
Phy/Ab.Phy/Func/Econ/Comb. % Good=35/80/100/100/28
Building Areas

Type	Ext. Walls	Roof/Fnd.	Size	Cost New	Depr. Cost
Main Home	Ribbed	Metal	552		
			Total:	30,318	8,488
Other Additions/Adjustments					
Skirting, Metal or Vinyl, Vertical			116	1,260	353
Deck					
Treated Wood			20	883	247
			Totals:	32,461	9,088

Notes:

ECF (RESIDENTIAL) 1.297 => TCV: 11,787

*** Information herein deemed reliable but not guaranteed***

Building Type

X	Single Family
	Mobile Home
	Town Home
	Duplex
	A-Frame
X	Wood Frame

Building Style: PLAIN

Yr Built	Remodeled
0	0

Condition: Good

Room List

	Basement
	1st Floor
	2nd Floor
	Bedrooms

(1) Exterior

X	Wood/Shingle
	Aluminum/Vinyl
	Brick
X	Insulation

(2) Windows

X	Many Avg. Few	X	Large Avg. Small

	Wood Sash
	Metal Sash
X	Vinyl Sash
	Double Hung
	Horiz. Slide
	Casement
	Double Glass
	Patio Doors
X	Storms & Screens

(3) Roof

X	Gable		Gambrel
	Hip		Mansard
	Flat		Shed

X	Asphalt Shingle

Chimney:

(3) Roof (cont.)

	Eavestrough
X	Insulation
0	Front Overhang
0	Other Overhang

(4) Interior

X	Drywall		Plaster
	Paneled		Wood T&G

Trim & Decoration

	Ex	X	Ord		Min

Size of Closets

	Lg	X	Ord		Small

Doors:		Solid	X	H.C.	

(5) Floors

Kitchen:
Other: Linoleum
Other: Carpeted

(6) Ceilings

X	Drywall

(7) Excavation

Basement: 0 S.F.
Crawl: 0 S.F.
Slab: 558 S.F.
Height to Joists: 0.0

(8) Basement

	Conc. Block
	Poured Conc.
	Stone
	Treated Wood
	Concrete Floor

(9) Basement Finish

	Recreation SF
	Living SF
	Walkout Doors (B)
	No Floor SF
	Walkout Doors (A)

(10) Floor Support

Joists:
Unsupported Len:
Cntr.Sup:

(11) Heating/Cooling

X	Gas		Oil		Elec.
	Wood		Coal		Steam

	Forced Air w/o Ducts
X	Forced Air w/ Ducts
	Forced Hot Water
	Electric Baseboard
	Elec. Ceil. Radiant
	Radiant (in-floor)
	Electric Wall Heat
	Space Heater
	Wall/Floor Furnace
	Forced Heat & Cool
	Heat Pump
	No Heating/Cooling

	Central Air
	Wood Furnace

(12) Electric

150	Amps Service

No./Qual. of Fixtures

	Ex.	X	Ord.		Min

No. of Elec. Outlets

	Many	X	Ave.		Few

(13) Plumbing

1	Average Fixture(s)
	3 Fixture Bath
	2 Fixture Bath
	Softener, Auto
	Softener, Manual
	Solar Water Heat
	No Plumbing
	Extra Toilet
	Extra Sink
	Separate Shower
	Ceramic Tile Floor
	Ceramic Tile Wains
	Ceramic Tub Alcove
	Vent Fan

(14) Water/Sewer

	Public Water
	Public Sewer
1	Water Well
	1000 Gal Septic
	2000 Gal Septic

Lump Sum Items:

(15) Built-ins

	Appliance Allow.
	Cook Top
	Dishwasher
	Garbage Disposal
	Bath Heater
	Vent Fan
	Hot Tub
	Unvented Hood
	Vented Hood
	Intercom
	Jacuzzi Tub
	Jacuzzi repl.Tub
	Oven
	Microwave
	Standard Range
	Self Clean Range
	Sauna
	Trash Compactor
	Central Vacuum
	Security System

(15) Fireplaces

	Interior 1 Story
	Interior 2 Story
	2nd/Same Stack
	Two Sided
	Exterior 1 Story
	Exterior 2 Story
	Prefab 1 Story
	Prefab 2 Story
	Heat Circulator
	Raised Hearth
	Wood Stove
	Direct-Vented Gas

Class: D -20
Effec. Age: 65
Floor Area: 558
Total Base New : 58,258 E.C.F.
Total Depr Cost: 18,361 X 1.297
Estimated T.C.V: 23,814

(16) Porches/Decks

Area	Type

(17) Garage

Year Built:
Car Capacity:
Class:
Exterior:
Brick Ven.:
Stone Ven.:
Common Wall:
Foundation:
Finished ?:
Auto. Doors:
Mech. Doors:
Area:
% Good:
Storage Area:
No Conc. Floor:

Bsmnt Garage:

Carport Area:
Roof:

Cost Est. for Res. Bldg: 3 Single Family PLAIN Cls D-20 Blt 0
(11) Heating System: Forced Air w/ Ducts
Ground Area = 558 SF Floor Area = 558 SF.
Phy/Ab.Phy/Func/Econ/Comb. % Good=45/70/100/100/31.5
Building Areas

Stories	Exterior	Foundation	Size	Cost New	Depr. Cost
1 Story	Siding	Slab	558		
			Total:	52,713	16,614

Other Additions/Adjustments

Water/Sewer			
Water Well, 100 Feet	1	5,545	1,747
	Totals:	58,258	18,361

Notes:

ECF (RESIDENTIAL) 1.297 => TCV: 23,814

*** Information herein deemed reliable but not guaranteed***

Parcel Number: 2410-14-1301 Jurisdiction: GREENWOOD TWP County: WEXFORD Printed on 02/15/2024

Grantor	Grantee	Sale Price	Sale Date	Inst. Type	Terms of Sale	Liber & Page	Verified By	Prcnt. Trans.

Property Address	Class: AGRICULTURAL-VACAN	Zoning:	Building Permit(s)	Date	Number	Status
	School: MANTON CONSOLIDATED SCHOOLS					
Owner's Name/Address	P.R.E. 0%					
	:					
	2024 Est TCV 0					

STATE OF MICHIGAN
P O BOX 30735
GRANTS ADMINISTRATION
LANSING MI 48909-8235

Tax Description

S 1/2 OF NE 1/4 & N 1/2 OF SE 1/4 & NW 1/4 & N 1/2 OF SW 1/4 400 A. GW. SEC. 14 T24N R10W -MANTON-

Comments/Influences

The Equalizer. Copyright (c) 1999 - 2009. Licensed To: Township of Greenwood, County of Wexford, Michigan

	Improved	X	Vacant

	Public Improvements
X	Dirt Road
X	Gravel Road
	Paved Road
	Storm Sewer
	Sidewalk
	Water
	Sewer
	Electric
	Gas
	Curb
	Street Lights
	Standard Utilities
	Underground Utils.

	Topography of Site
X	Level
X	Rolling
	Low
	High
	Landscaped
	Swamp
X	Wooded
	Pond
	Waterfront
	Ravine
	Wetland
	Flood Plain
X	OPEN/PINES

Who	When	What
GLA	05/03/2016	INSPECTION

Land Value Estimates for Land Table 4010.LAND VALUES

Description	Frontage	Depth	* Factors * Front	Depth	Rate	%Adj.	Reason	Value
ACREAGE			392.000 Acres		2,480	100		972,160
			8.000 Acres		0	100		0
			400.00 Total Acres		Total Est. Land Value =			972,160

Year	Land Value	Building Value	Assessed Value	Board of Review	Tribunal/ Other	Taxable Value
2024	EXEMPT	EXEMPT	EXEMPT			EXEMPT
2023	EXEMPT	EXEMPT	EXEMPT			EXEMPT
2022	0	0	0			0
2021	0	0	0			0

*** Information herein deemed reliable but not guaranteed***

Parcel Number: 2410-14-3301 Jurisdiction: GREENWOOD TWP County: WEXFORD Printed on 02/15/2024

Grantor	Grantee	Sale Price	Sale Date	Inst. Type	Terms of Sale	Liber & Page	Verified By	Prcnt. Trans.
SMITH, EUGENE B & MARCIA E	SMITH, PAUL W	0	03/06/2009	QC	09-FAMILY	618/2623	DEED	100.0

Property Address

9028 N 33 RD

Owner's Name/Address

SMITH, PAUL W
9028 N 33 RD
MANTON MI 49663

Tax Description

S 1/2 OF SW 1/4 EXC COM AT SW COR OF SEC; N 996.94 FT TO POB: N 327.39 FT; E 283.91 FT; S 326.58 FT; W 283.93 FT TO POB --77.87 A M/L- GW. SEC. 14 T24N R10W -MANTON- COMBINED W/ 14-3302-02, 2-18-10

Comments/Influences

The Equalizer. Copyright (c) 1999 - 2009. Licensed To: Township of Greenwood, County of Wexford, Michigan

Class: RESIDENTIAL-IMPROV Zoning:

School: MANTON CONSOLIDATED SCHOOLS

P.R.E. 100% 12/15/2009

:

2024 Est TCV 329,304 TCV/TFA: 245.02

Building Permit(s)	Date	Number	Status
RESIDENTIAL - REMODEL	12/03/2002	PM6416	

X	Improved		Vacant

	Public Improvements
	Dirt Road
X	Gravel Road
	Paved Road
	Storm Sewer
	Sidewalk
	Water
	Sewer
X	Electric
	Gas
	Curb
	Street Lights
	Standard Utilities
	Underground Utils.

	Topography of Site
X	Level
X	Rolling
	Low
	High
	Landscaped
	Swamp
X	Wooded
	Pond
	Waterfront
	Ravine
	Wetland
	Flood Plain
X	OPEN/PINES

Who	When	What
GLA	05/13/2021	INSPECTION
LM	10/28/2011	APPR INSPE
GLA	05/03/2016	INSPECTION

Land Value Estimates for Land Table 4010.LAND VALUES

Description	Frontage	Depth	* Factors * Front	Depth	Rate	%Adj.	Reason	Value
ACREAGE			77.114 Acres		2,552	100		196,781
ROW			0.755 Acres		0	100		0
			77.87 Total Acres		Total Est. Land Value =			196,781

Land Improvement Cost Estimates

Description	Rate	Size	% Good	Cash Value
D/W/P: 3.5 Concrete	6.68	80	68	363
Total Estimated Land Improvements True Cash Value =				363

Year	Land Value	Building Value	Assessed Value	Board of Review	Tribunal/ Other	Taxable Value
2024	98,400	66,300	164,700			103,961C
2023	84,200	53,000	137,200			99,011C
2022	65,500	44,500	110,000			94,297C
2021	60,100	44,900	105,000			91,285C

*** Information herein deemed reliable but not guaranteed***

Building Type

X	Single Family
	Mobile Home
	Town Home
	Duplex
	A-Frame
	Wood Frame
X	Block

Building Style: RANCH

Yr Built	Remodeled
1951	1971 2000

Condition: Fair

Room List

	Basement
5	1st Floor
	2nd Floor
2	Bedrooms

(1) Exterior

	Wood/Shingle
	Aluminum/Vinyl
	Brick
X	Hardboard
	Insulation

(2) Windows

X	Many Avg. Few	X	Large Avg. Small

X	Wood Sash
	Metal Sash
	Vinyl Sash
X	Double Hung
	Horiz. Slide
	Casement
	Double Glass
	Patio Doors
X	Storms & Screens

(3) Roof

X	Gable		Gambrel
	Hip		Mansard
	Flat		Shed

X	Asphalt Shingle

Chimney: Block

(3) Roof (cont.)

	Eavestrough
	Insulation
0	Front Overhang
0	Other Overhang

(4) Interior

	Drywall		Plaster
	Paneled		Wood T&G

Trim & Decoration

	Ex		Ord		Min

Size of Closets

	Lg		Ord		Small

Doors:		Solid		H.C.	

(5) Floors

Kitchen:
Other:
Other:

(6) Ceilings

(7) Excavation

Basement: 0 S.F.
Crawl: 0 S.F.
Slab: 1344 S.F.
Height to Joists: 0.0

(8) Basement

	Conc. Block
	Poured Conc.
	Stone
	Treated Wood
	Concrete Floor

(9) Basement Finish

	Recreation SF
	Living SF
	Walkout Doors (B)
	No Floor SF
	Walkout Doors (A)

(10) Floor Support

Joists:
Unsupported Len:
Cntr.Sup:

(11) Heating/Cooling

X	Gas		Oil		Elec.
	Wood		Coal		Steam

	Forced Air w/o Ducts
X	Forced Air w/ Ducts
	Forced Hot Water
	Electric Baseboard
	Elec. Ceil. Radiant
	Radiant (in-floor)
	Electric Wall Heat
	Space Heater
	Wall/Floor Furnace
	Forced Heat & Cool
	Heat Pump
	No Heating/Cooling

	Central Air
	Wood Furnace

(12) Electric

0	Amps Service

No./Qual. of Fixtures

	Ex.		Ord.		Min

No. of Elec. Outlets

	Many		Ave.		Few

(13) Plumbing

	Average Fixture(s)
1	3 Fixture Bath
	2 Fixture Bath
	Softener, Auto
	Softener, Manual
	Solar Water Heat
	No Plumbing
	Extra Toilet
	Extra Sink
	Separate Shower
	Ceramic Tile Floor
	Ceramic Tile Wains
	Ceramic Tub Alcove
	Vent Fan

(14) Water/Sewer

	Public Water
	Public Sewer
1	Water Well
1	1000 Gal Septic
	2000 Gal Septic

Lump Sum Items:

(15) Built-ins

	Appliance Allow.
	Cook Top
	Dishwasher
	Garbage Disposal
	Bath Heater
	Vent Fan
	Hot Tub
	Unvented Hood
	Vented Hood
	Intercom
	Jacuzzi Tub
	Jacuzzi repl.Tub
	Oven
	Microwave
	Standard Range
	Self Clean Range
	Sauna
	Trash Compactor
	Central Vacuum
	Security System

(15) Fireplaces

	Interior 1 Story
	Interior 2 Story
	2nd/Same Stack
	Two Sided
1	Exterior 1 Story
	Exterior 2 Story
	Prefab 1 Story
	Prefab 2 Story
	Heat Circulator
	Raised Hearth
	Wood Stove
	Direct-Vented Gas

Class: CD
Effec. Age: 62
Floor Area: 1,344
Total Base New : 226,435 E.C.F.
Total Depr Cost: 101,897 X 1.297
Estimated T.C.V: 132,160

(16) Porches/Decks

Area	Type
168	CGEP (1 Story)
360	CPP

(17) Garage

Year Built:
Car Capacity:
Class: CD
Exterior: Siding
Brick Ven.: 0
Stone Ven.: 0
Common Wall: Detache
Foundation: 18 Inch
Finished ?:
Auto. Doors: 0
Mech. Doors: 0
Area: 936
% Good: 0
Storage Area: 0
No Conc. Floor: 0

Bsmnt Garage:

Carport Area:
Roof:

Cost Est. for Res. Bldg: 1 Single Family RANCH Cls CD Blt 1951
(11) Heating System: Forced Air w/ Ducts
Ground Area = 1344 SF Floor Area = 1344 SF.
Phy/Ab.Phy/Func/Econ/Comb. % Good=45/100/100/100/45
Building Areas

Stories	Exterior	Foundation	Size	Cost New	Depr. Cost
1 Story	Block	Slab	768		
1 Story	Siding	Slab	576		
			Total:	149,885	67,449
Other Additions/Adjustments					
Water/Sewer					
1000 Gal Septic			1	4,540	2,043
Water Well, 100 Feet			1	5,720	2,574
Porches					
CGEP (1 Story)			168	9,737	4,382
CPP			360	5,058	2,276
Foundation: Shallow			360	-1,825	-821
Garages					
Class: CD Exterior: Siding Foundation: 18 Inch (Unfinished)					
Base Cost			936	28,370	12,766
Class: D Exterior: Pole (Unfinished)					
Base Cost			960	19,162	8,623
Fireplaces					
Exterior 1 Story			1	5,788	2,605
			Totals:	226,435	101,897

Notes:

ECF (RESIDENTIAL) 1.297 => TCV: 132,160

*** Information herein deemed reliable but not guaranteed***

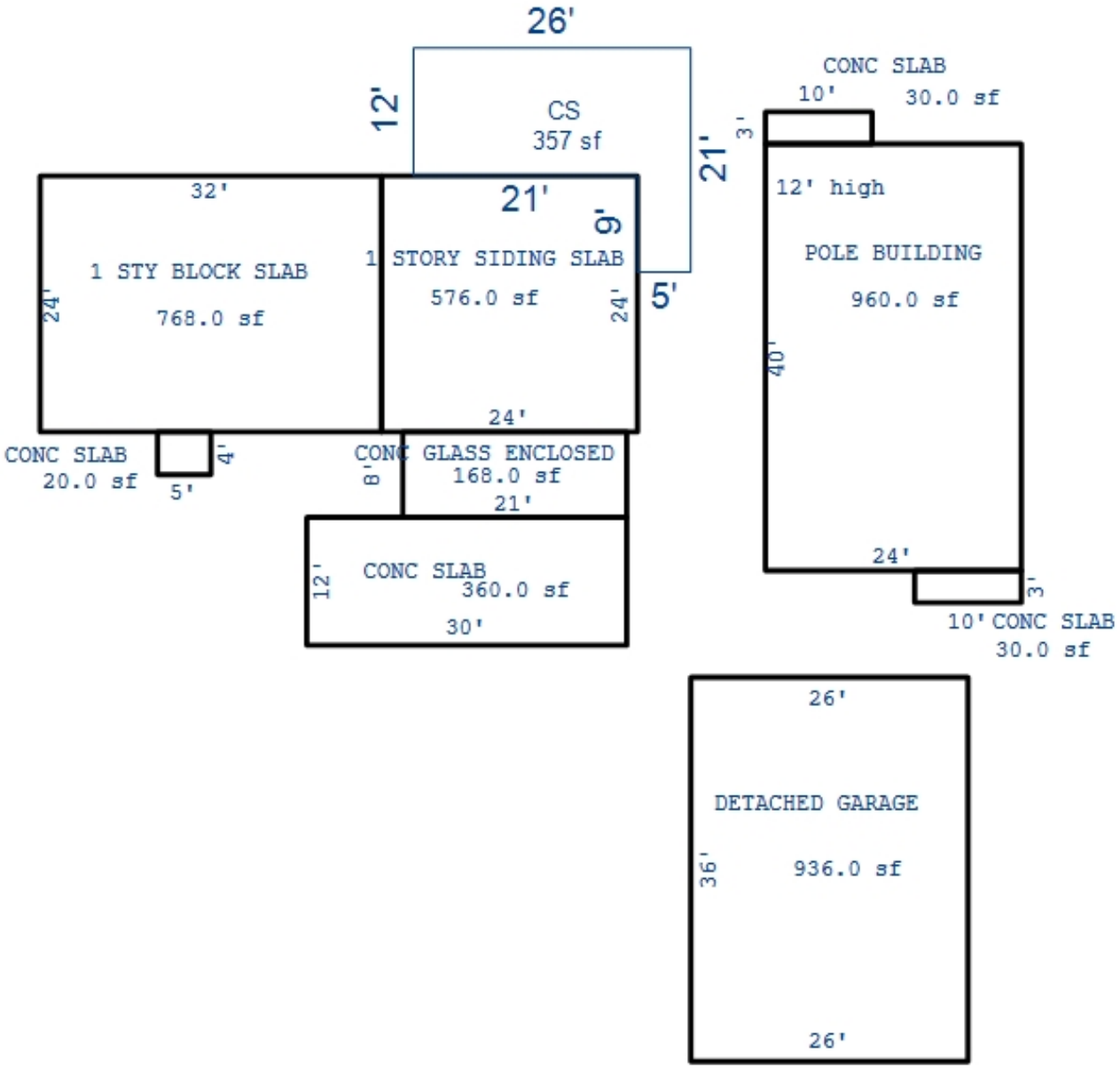

*** Information herein deemed reliable but not guaranteed***

Parcel Number: 2410-14-3302-01 Jurisdiction: GREENWOOD TWP County: WEXFORD Printed on 02/15/2024

Grantor	Grantee	Sale Price	Sale Date	Inst. Type	Terms of Sale	Liber & Page	Verified By	Prcnt. Trans.
CONN TIMOTHY H	RELIANT RENTALS LLC	70,000	12/28/2023	WD	03-ARM'S LENGTH	696-2061	DEED	100.0
SCHULTZ, JOLYNE LOU TRUST	CONN TIMOTHY H	0	07/27/2013	QC	21-NOT USED/OTHER	695/2229	DEED	100.0
SMITH, EUGENE & MARCIA E T	SCHULTZ, JOLYNE LOU TRUST	0	08/13/2008	QC	09-FAMILY	613/2641	DEED	0.0

Property Address

9210 N 33 RD

Owner's Name/Address

RELIANT RENTALS LLC
615 SAGINAW ST SUITE 7004
FLINT MI 48502

Class: RESIDENTIAL-IMPROV Zoning:

School: MANTON CONSOLIDATED SCHOOLS

P.R.E. 0%

:

2024 Est TCV 172,591 TCV/TFA: 142.87

Building Permit(s)	Date	Number	Status

X Improved | Vacant

Land Value Estimates for Land Table 4010.LAND VALUES

Description	Frontage	Depth	* Factors * Front	Depth	Rate	%Adj.	Reason	Value
ACREAGE			1.880 Acres		6,581	100		12,373
ROW			0.250 Acres		0	100		0
			2.13 Total Acres		Total Est. Land Value =			12,373

Public Improvements

- Dirt Road
- X Gravel Road
- Paved Road
- Storm Sewer
- Sidewalk
- Water
- Sewer
- X Electric
- Gas
- Curb
- Street Lights
- Standard Utilities
- Underground Utils.

Topography of Site

- X Level
- X Rolling
- Low
- High
- Landscaped
- Swamp
- X Wooded
- Pond
- Waterfront
- Ravine
- Wetland
- Flood Plain
- X OPEN

Tax Description

COM AT SW COR OF SEC; N 996.94 FT TO POB: N 327.39 FT; E 283.91 FT; S 326.58 FT; W 283.93 FT TO POB. -2.13 A M/L-- GW. SEC. 14 T24N R10W -MANTON- [[ASSESSED W/ 14-3301 '03 SPLIT ON 08/19/2008 FROM 2410-14-3302;

Comments/Influences

JOLYENE SCHULTZ LIVING W/DAUGHTER IN MASON DUE TO HEALTH 5/09
SPLIT/COMB. ON 08/19/2008 COMPLETED 3/06/09 DEB OWNER REQUEST ;
PARENT PARCEL(S): 2410-14-3302;

Year	Land Value	Building Value	Assessed Value	Board of Review	Tribunal/ Other	Taxable Value
2024	6,200	80,100	86,300			86,300S
2023	5,300	65,400	70,700		70,700A	50,601C
2022	4,300	55,200	59,500		59,500A	48,192C
2021	4,800	55,900	60,700		60,700A	46,652C

Who	When	What
DB	12/21/2023	INSPECTION
GLA	05/03/2016	INSPECTION

The Equalizer. Copyright (c) 1999 - 2009.
Licensed To: Township of Greenwood, County of Wexford, Michigan

*** Information herein deemed reliable but not guaranteed***

Building Type

X	Single Family
	Mobile Home
	Town Home
	Duplex
	A-Frame
X	Wood Frame

Building Style: PLAIN

Yr Built	Remodeled
0	1993

Condition: Good

Room List

	Basement
	1st Floor
	2nd Floor
	Bedrooms

(1) Exterior

X	Wood/Shingle
	Aluminum/Vinyl
	Brick
X	Insulation

(2) Windows

	Many		Large
X	Avg.	X	Avg.
	Few		Small

X	Wood Sash
	Metal Sash
	Vinyl Sash
	Double Hung
	Horiz. Slide
	Casement
	Double Glass
	Patio Doors
X	Storms & Screens

(3) Roof

X	Gable		Gambrel
	Hip		Mansard
	Flat		Shed

X	Asphalt Shingle

Chimney:

(3) Roof (cont.)

	Eavestrough
X	Insulation
0	Front Overhang
0	Other Overhang

(4) Interior

	Drywall	X	Plaster
	Paneled		Wood T&G

Trim & Decoration

	Ex	X	Ord		Min

Size of Closets

	Lg	X	Ord		Small

Doors:		Solid	X	H.C.	

(5) Floors

Kitchen:
Other: Linoleum
Other: Carpeted

(6) Ceilings

X	Plaster

(7) Excavation

Basement: 0 S.F.
Crawl: 1208 S.F.
Slab: 0 S.F.
Height to Joists: 0.0

(8) Basement

	Conc. Block
	Poured Conc.
	Stone
	Treated Wood
	Concrete Floor

(9) Basement Finish

	Recreation SF
	Living SF
	Walkout Doors (B)
	No Floor SF
	Walkout Doors (A)

(10) Floor Support

Joists:
Unsupported Len:
Cntr.Sup:

(11) Heating/Cooling

X	Gas		Oil		Elec.
	Wood		Coal		Steam

	Forced Air w/o Ducts
X	Forced Air w/ Ducts
	Forced Hot Water
	Electric Baseboard
	Elec. Ceil. Radiant
	Radiant (in-floor)
	Electric Wall Heat
	Space Heater
	Wall/Floor Furnace
	Forced Heat & Cool
	Heat Pump
	No Heating/Cooling

	Central Air
	Wood Furnace

(12) Electric

100	Amps Service

No./Qual. of Fixtures

	Ex.	X	Ord.		Min

No. of Elec. Outlets

	Many	X	Ave.		Few

(13) Plumbing

1	Average Fixture(s)
	3 Fixture Bath
	2 Fixture Bath
	Softener, Auto
	Softener, Manual
	Solar Water Heat
	No Plumbing
	Extra Toilet
	Extra Sink
	Separate Shower
	Ceramic Tile Floor
	Ceramic Tile Wains
	Ceramic Tub Alcove
	Vent Fan

(14) Water/Sewer

	Public Water
	Public Sewer
1	Water Well
1	1000 Gal Septic
	2000 Gal Septic

Lump Sum Items:

(15) Built-ins

	Appliance Allow.
	Cook Top
	Dishwasher
	Garbage Disposal
	Bath Heater
	Vent Fan
	Hot Tub
	Unvented Hood
	Vented Hood
	Intercom
	Jacuzzi Tub
	Jacuzzi repl.Tub
	Oven
	Microwave
	Standard Range
	Self Clean Range
	Sauna
	Trash Compactor
	Central Vacuum
	Security System

(15) Fireplaces

	Interior 1 Story
	Interior 2 Story
	2nd/Same Stack
	Two Sided
	Exterior 1 Story
	Exterior 2 Story
	Prefab 1 Story
	Prefab 2 Story
	Heat Circulator
	Raised Hearth
	Wood Stove
	Direct-Vented Gas

Class: CD
Effec. Age: 31
Floor Area: 1,208
Total Base New : 179,029 E.C.F.
Total Depr Cost: 123,530 X 1.297
Estimated T.C.V: 160,218

(16) Porches/Decks

Area	Type
100	WPP
280	CCP (1 Story)

(17) Garage

Year Built:
Car Capacity:
Class: CD
Exterior: Siding
Brick Ven.: 0
Stone Ven.: 0
Common Wall: Detache
Foundation: 18 Inch
Finished ?:
Auto. Doors: 0
Mech. Doors: 0
Area: 576
% Good: 0
Storage Area: 0
No Conc. Floor: 0

Bsmnt Garage:

Carport Area:
Roof:

Cost Est. for Res. Bldg: 1 Single Family PLAIN Cls CD Blt 0
(11) Heating System: Forced Air w/ Ducts
Ground Area = 1208 SF Floor Area = 1208 SF.
Phy/Ab.Phy/Func/Econ/Comb. % Good=69/100/100/100/69
Building Areas

Stories	Exterior	Foundation	Size	Cost New	Depr. Cost
1 Story	Siding	Crawl Space	1,208		
			Total:	139,864	96,506
Other Additions/Adjustments					
Water/Sewer					
1000 Gal Septic			1	4,582	3,162
Water Well, 100 Feet			1	5,680	3,919
Porches					
WPP			100	2,584	1,783
CCP (1 Story)			280	6,384	4,405
Garages					
Class: CD Exterior: Siding Foundation: 18 Inch (Unfinished)					
Base Cost			576	19,935	13,755
			Totals:	179,029	123,530

Notes:
ECF (RESIDENTIAL) 1.297 => TCV: 160,218

*** Information herein deemed reliable but not guaranteed***

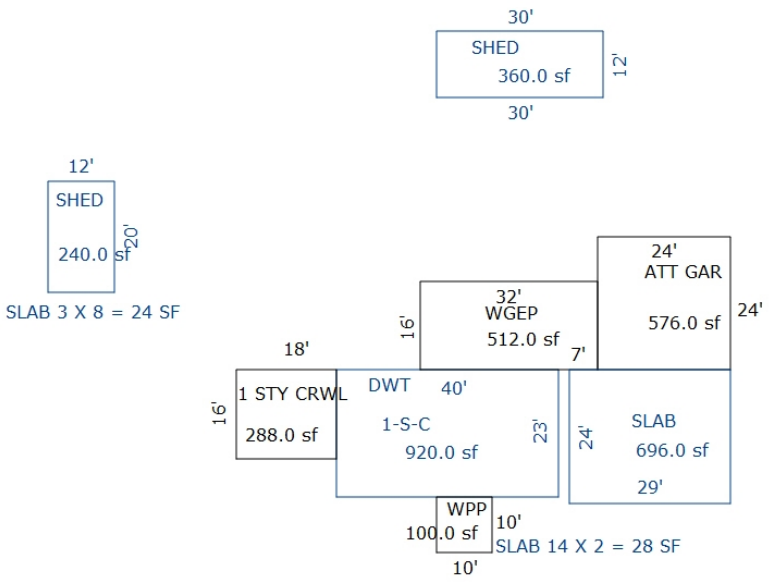

Sketch by Apex Sketch

*** Information herein deemed reliable but not guaranteed***

Parcel Number: 2410-14-4301 Jurisdiction: GREENWOOD TWP County: WEXFORD Printed on 02/15/2024

Grantor	Grantee	Sale Price	Sale Date	Inst. Type	Terms of Sale	Liber & Page	Verified By	Prcnt. Trans.

Property Address

Owner's Name/Address

BRZYSKI, CURTIS
4387 BONNYMEDE ST
JACKSON MI 49201-8511

Tax Description

PAR COM 1154.55 FT N OF SE COR OF SEC: S 88D W 33.02 FT TO W'LY LINE OF RD; S 88D W 1256.88 FT TO E 1/8-LINE; S 88DW 1289.89 FT TO N-S 1/4-LINE; N 168.74 FT TO S 1/8-LINE; N 88D E 1289.84 FT TO E 1/8-LINE; N 88D E 1256.82 FT TO W'LY LINE OF RD; N 88D E 33.02 FT TO E SEC LINE; S 169.51 FT TO POB. 10.01 A. GW. SEC. 14 T24N R10W- MANTON-

Comments/Influences

The Equalizer. Copyright (c) 1999 - 2009. Licensed To: Township of Greenwood, County of Wexford, Michigan

Class: RESIDENTIAL-VACANT Zoning:

School: MANTON CONSOLIDATED SCHOOLS

P.R.E. 0%

:

2024 Est TCV 45,927

Building Permit(s)	Date	Number	Status

	Improved	X	Vacant

	Public Improvements
X	Dirt Road
X	Gravel Road
	Paved Road
	Storm Sewer
	Sidewalk
	Water
	Sewer
	Electric
	Gas
	Curb
	Street Lights
	Standard Utilities
	Underground Utils.

	Topography of Site
X	Level
X	Rolling
	Low
	High
	Landscaped
	Swamp
X	Wooded
	Pond
	Waterfront
	Ravine
	Wetland
	Flood Plain
X	OPEN

Who	When	What
GLA	05/03/2016	INSPECTION

Land Value Estimates for Land Table 4010.LAND VALUES

Description	Frontage	Depth	* Factors * Front	Depth	Rate	%Adj.	Reason	Value
ACREAGE			9.880 Acres		4,649	100		45,927
ROW			0.130 Acres		0	100		0
			10.01 Total Acres		Total Est. Land Value =			45,927

Year	Land Value	Building Value	Assessed Value	Board of Review	Tribunal/ Other	Taxable Value
2024	23,000	0	23,000			5,301C
2023	13,000	0	13,000			5,049C
2022	11,900	0	11,900			4,809C
2021	12,000	0	12,000			4,656C

*** Information herein deemed reliable but not guaranteed***

Parcel Number: 2410-14-4302 Jurisdiction: GREENWOOD TWP County: WEXFORD Printed on 02/15/2024

Grantor	Grantee	Sale Price	Sale Date	Inst. Type	Terms of Sale	Liber & Page	Verified By	Prcnt. Trans.
SCHNEIDER, JOHN B & SHARON	SCHNEIDER, JUSTIN EMERY	0	01/01/2016	QC	21-NOT USED/OTHER		DEED	16.7
SCHNEIDER, KENNETH M ETAL	SCHNEIDER, PETER F ETAL	0	12/30/2015	WD	21-NOT USED/OTHER	676/1909	DEED	16.7
SCHNEIDER, KENNETH M ETAL	SCHNEIDER, PETER F ETAL	0	12/30/2015	WD	21-NOT USED/OTHER	676/1909	DEED	25.0
PHILLIPS, DAVID R	SCHNEIDER, KENNETH M ETAL	3,000	02/06/2014	QC	09-FAMILY	665/2568	DEED	16.7

Property Address

Owner's Name/Address

SCHNEIDER, PETER F ETAL
195 PENINSULA DRIVE
HIGHLAND MI 48357

Tax Description

PAR COM 992.71 FT N OF SE COR OF SEC: S 88D W 33.02 FT TO W'LY LINE OF RD; S 88D W 1256.94 FT TO E 1/8-LINE; S 88D W 1289.96 FT TO N-S 1/4-LINE; N 161.85 FT N 88D E 1289.89 FT TO E 1/8-LINE; N 88D E 1256.88 FT TO W'LY LINE OF RD; N 88D E 33.02 FT TO E SEC LINE; S 161.84 FT TO POB. --9.580 A.-- GW. SEC. 14 T24N R10W -MANTON-

Comments/Influences

The Equalizer. Copyright (c) 1999 - 2009. Licensed To: Township of Greenwood, County of Wexford, Michigan

Class: RESIDENTIAL-VACANT Zoning:

School: MANTON CONSOLIDATED SCHOOLS

P.R.E. 0%

:

2024 Est TCV 44,413

Building Permit(s)	Date	Number	Status

	Improved	X	Vacant

	Public Improvements
X	Dirt Road
	Gravel Road
	Paved Road
	Storm Sewer
	Sidewalk
	Water
	Sewer
X	Electric
	Gas
	Curb
	Street Lights
	Standard Utilities
	Underground Utils.

	Topography of Site
X	Level
X	Rolling
	Low
	High
	Landscaped
	Swamp
X	Wooded
	Pond
	Waterfront
	Ravine
	Wetland
	Flood Plain
X	OPEN

Who	When	What
GLA	05/03/2016	INSPECTION

Land Value Estimates for Land Table 4010.LAND VALUES

Description	Frontage	Depth	* Factors * Front	Depth	Rate	%Adj.	Reason	Value
ACREAGE			9.450 Acres		4,700	100		44,413
ROW			0.130 Acres		0	100		0
			9.58 Total Acres		Total Est. Land Value =			44,413

Year	Land Value	Building Value	Assessed Value	Board of Review	Tribunal/ Other	Taxable Value
2024	22,200	0	22,200			10,942C
2023	12,800	0	12,800			10,421C
2022	11,700	0	11,700			9,925C
2021	12,000	0	12,000			9,608C

*** Information herein deemed reliable but not guaranteed***

Parcel Number: 2410-14-4303 Jurisdiction: GREENWOOD TWP County: WEXFORD Printed on 02/15/2024

Grantor	Grantee	Sale Price	Sale Date	Inst. Type	Terms of Sale	Liber & Page	Verified By	Prcnt. Trans.
SCHNEIDER, JOHN B & SHARRO	SCHNEIDER, JUSTIN EMERY	0	01/01/2016	QC	09-FAMILY		DEED	16.7
SCHNEIDER, KENNETH M ETAL	SCHNEIDER, PETER F ETAL	0	12/30/2015	WD	21-NOT USED/OTHER	676/1909	DEED	16.7
SCHNEIDER, KENNETH M ETAL	SCHNEIDER, PETER F ETAL	0	12/30/2015	WD	21-NOT USED/OTHER	676/1909	DEED	25.0
PHILLIPS, DAVID R	SCHNEIDER, KENNETH M ETAL	0	02/06/2014	QC	20-MULTI PARCEL SALE REF	665/2568	DEED	16.7

Property Address

Owner's Name/Address

SCHNEIDER, PETER F ETAL
195 PENINSULA DRIVE
HIGHLAND MI 48357

Tax Description

PAR COM 823.60 FT N OF SE COR OF SEC: S 88D W 33.02 FT TO W'LY LINE OF RD; S 88D W 1257 FT TO E 1/8-LINE; S 88D W 1290.02 FT TO N-S 1/4-LINE; N 169.11 FT; N 88D E 1289.96 FT TO E 1/8-LINE; N 88D E 1256.94 FT TO W'LY LINE OF RD; N 88D E 33.02 FT TO E SEC LINE; S 169.11 FT TO POB.
--10.010 A. M/L-- GW. SEC. 14 T24N R10W
-MANTON-

Comments/Influences

The Equalizer. Copyright (c) 1999 - 2009. Licensed To: Township of Greenwood, County of Wexford, Michigan

Class: RESIDENTIAL-VACANT Zoning:

School: MANTON CONSOLIDATED SCHOOLS

P.R.E. 0%

:

2024 Est TCV 45,927

Building Permit(s)	Date	Number	Status

	Improved	X	Vacant

	Public Improvements
X	Dirt Road
X	Gravel Road
	Paved Road
	Storm Sewer
	Sidewalk
	Water
	Sewer
	Electric
	Gas
	Curb
	Street Lights
	Standard Utilities
	Underground Utils.

	Topography of Site
X	Level
X	Rolling
	Low
	High
	Landscaped
	Swamp
X	Wooded
	Pond
	Waterfront
	Ravine
	Wetland
	Flood Plain
X	OPEN/PINES

Who	When	What
GLA	05/03/2016	INSPECTION

Land Value Estimates for Land Table 4010.LAND VALUES

Description	Frontage	Depth	* Factors * Front	Depth	Rate	%Adj.	Reason	Value
ACREAGE			9.880 Acres		4,649	100		45,927
ROW			0.130 Acres		0	100		0
			10.01 Total Acres		Total Est. Land Value =			45,927

Year	Land Value	Building Value	Assessed Value	Board of Review	Tribunal/ Other	Taxable Value
2024	23,000	0	23,000			11,176C
2023	13,000	0	13,000			10,644C
2022	11,900	0	11,900			10,138C
2021	12,000	0	12,000			9,815C

*** Information herein deemed reliable but not guaranteed***

Parcel Number: 2410-14-4304 Jurisdiction: GREENWOOD TWP County: WEXFORD Printed on 02/15/2024

Grantor	Grantee	Sale Price	Sale Date	Inst. Type	Terms of Sale	Liber & Page	Verified By	Prcnt. Trans.

Property Address

Owner's Name/Address

SCHNEIDER, JOHN B. JR.
2823 DOBIE RD.
MASON MI 48854

Tax Description

PAR COM 654.50 FT N OF SE COR OF SEC: S 88 D W 33.02 FT TO W'LY LINE OF RD; S 88D W 1257.07 FT TO E 1/8-LINE; S 88D W 1290.08 FT TO N-S 1/4-LINE; N 169.10 FT; N 88D E 1290.02 FT TO E 1/8-LINE; N 88D E 1257.00 FT TO W'LY LINE OF RD; N 88D E 33.02 FT TO E SEC LINE; S 169. 10 FT TO POB. --10.010 A.-- GW. SEC. T24N R10W -MANTON-

Comments/Influences

The Equalizer. Copyright (c) 1999 - 2009. Licensed To: Township of Greenwood, County of Wexford, Michigan

Class: RESIDENTIAL-VACANT Zoning:

School: MANTON CONSOLIDATED SCHOOLS

P.R.E. 0%

:

2024 Est TCV 45,927

Building Permit(s)	Date	Number	Status

	Improved	X	Vacant

	Public Improvements
X	Dirt Road
X	Gravel Road
	Paved Road
	Storm Sewer
	Sidewalk
	Water
	Sewer
	Electric
	Gas
	Curb
	Street Lights
	Standard Utilities
	Underground Utils.

	Topography of Site
X	Level
X	Rolling
	Low
	High
	Landscaped
	Swamp
X	Wooded
	Pond
	Waterfront
	Ravine
	Wetland
	Flood Plain
X	OPEN/PINES

Who	When	What
GLA	05/03/2016	INSPECTION

Land Value Estimates for Land Table 4010.LAND VALUES

Description	Frontage	Depth	* Factors * Front	Depth	Rate	%Adj.	Reason	Value
ACREAGE			9.880 Acres		4,649	100		45,927
ROW			0.130 Acres		0	100		0
			10.01 Total Acres		Total Est. Land Value =			45,927

Year	Land Value	Building Value	Assessed Value	Board of Review	Tribunal/ Other	Taxable Value
2024	23,000	0	23,000			5,301C
2023	13,000	0	13,000			5,049C
2022	11,900	0	11,900			4,809C
2021	12,000	0	12,000			4,656C

*** Information herein deemed reliable but not guaranteed***

Parcel Number: 2410-14-4305 Jurisdiction: GREENWOOD TWP County: WEXFORD Printed on 02/15/2024

Grantor	Grantee	Sale Price	Sale Date	Inst. Type	Terms of Sale	Liber & Page	Verified By	Prcnt. Trans.

Property Address

Owner's Name/Address

SCHNEIDER, MARK
133 MOROSS ST
MOUNT CLEMENS MI 48043

Tax Description

PAR COM 492.68 FT N OF SE COR OF SEC: S 88D W 33.02 FT TO W'LY LINE OF RD; S 88 D W 1257.13 FT TO E 1/8-LINE; S 88D W 1290.15 FT TO N-S 1/4-LINE; N 161.82 FT; N 88D E 1290.08 FT TO E 1/8-LINE; N 88D E 1257.07 FT TO W'LY LINE OF RD; N 88D E 33.02 FT TO E SEC LINE; S 161.82 FT TO POB.--9.580 A.-- GW. SEC. 14 T24N R10W -MANTON-

Comments/Influences

The Equalizer. Copyright (c) 1999 - 2009. Licensed To: Township of Greenwood, County of Wexford, Michigan

Class: RESIDENTIAL-VACANT Zoning:

School: MANTON CONSOLIDATED SCHOOLS

P.R.E. 0%

:

2024 Est TCV 44,413

Building Permit(s)	Date	Number	Status

	Improved	X	Vacant

	Public Improvements
	Dirt Road
X	Gravel Road
	Paved Road
	Storm Sewer
	Sidewalk
	Water
	Sewer
X	Electric
	Gas
	Curb
	Street Lights
	Standard Utilities
	Underground Utils.

	Topography of Site
X	Level
X	Rolling
	Low
	High
	Landscaped
	Swamp
X	Wooded
	Pond
	Waterfront
	Ravine
	Wetland
	Flood Plain
X	OPEN/PINES

Who	When	What
GLA	05/03/2016	INSPECTION

Land Value Estimates for Land Table 4010.LAND VALUES

Description	Frontage	Depth	* Factors * Front	Depth	Rate	%Adj.	Reason	Value
ACREAGE			9.450 Acres		4,700	100		44,413
ROW			0.130 Acres		0	100		0
			9.58 Total Acres		Total Est. Land Value =			44,413

Year	Land Value	Building Value	Assessed Value	Board of Review	Tribunal/ Other	Taxable Value
2024	22,200	0	22,200			5,110C
2023	12,800	0	12,800			4,867C
2022	11,700	0	11,700			4,636C
2021	12,000	0	12,000			4,488C

*** Information herein deemed reliable but not guaranteed***

Parcel Number: 2410-14-4306 Jurisdiction: GREENWOOD TWP County: WEXFORD Printed on 02/15/2024

Grantor	Grantee	Sale Price	Sale Date	Inst. Type	Terms of Sale	Liber & Page	Verified By	Prcnt. Trans.

Property Address
9073 N 35 RD

Owner's Name/Address
SCHNEIDER, JOSEPH F. LINDA ETAL 133 MOROSS ST MOUNT CLEMENS MI 48043

Tax Description
PAR COM 330.87 FT N OF SE COR OF SEC: S 88D W 33.02 FT TO W'LY LINE OF RD; S 88D W 1257.19 FT TO E 1/8-LINE; S 88D W 1290.21 FT TO N-S 1/4-LINE; N 161.82 FT; N 88D E 1290.15 FT TO E 1/8-LINE; N 88D E 1257.13 FT TO W'LY LINE OF RD; N 88D E 33.02 FT TO E SEC LINE; S 161. 81 FT TO POB. --9.580 A.-- GW. SEC. 14 T24N R10W -MANTON-

Comments/Influences

The Equalizer. Copyright (c) 1999 - 2009. Licensed To: Township of Greenwood, County of Wexford, Michigan

Class: RESIDENTIAL-IMPROV Zoning:

School: MANTON CONSOLIDATED SCHOOLS

P.R.E. 0%

:

2024 Est TCV 100,921 TCV/TFA: 82.99

Building Permit(s)	Date	Number	Status
RESIDENTIAL - REMODEL	06/26/2002	PM5983	
MOBILE HOME	06/07/2002	PP2628	
RESIDENTIAL - REMODEL	06/05/2002	PE14511	
RESIDENTIAL - REMODEL	05/08/2002	PB10903	

X	Improved		Vacant

	Public Improvements
	Dirt Road
X	Gravel Road
	Paved Road
	Storm Sewer
	Sidewalk
	Water
	Sewer
X	Electric
	Gas
	Curb
	Street Lights
	Standard Utilities
	Underground Utils.

	Topography of Site
X	Level
X	Rolling
	Low
	High
	Landscaped
	Swamp
X	Wooded
	Pond
	Waterfront
	Ravine
	Wetland
	Flood Plain
X	OPEN/PINES

Who	When	What
GLA	05/03/2016	INSPECTION

Land Value Estimates for Land Table 4010.LAND VALUES

Description	Frontage	Depth	* Factors * Front	Depth	Rate	%Adj.	Reason	Value
ACREAGE			9.450 Acres		4,700	100		44,413
ROW			0.130 Acres		0	100		0
			9.58 Total Acres		Total Est. Land Value =			44,413

Year	Land Value	Building Value	Assessed Value	Board of Review	Tribunal/ Other	Taxable Value
2024	22,200	28,300	50,500			30,123C
2023	12,800	24,200	37,000			28,689C
2022	11,700	21,300	33,000			27,323C
2021	12,000	18,900	30,900			26,451C

*** Information herein deemed reliable but not guaranteed***

Building Type

	Single Family
X	Mobile Home
	Town Home
	Duplex
	A-Frame

X	Wood Frame

Building Style: SWT/DWT

Yr Built	Remodeled
2002	0

Condition: Good

Room List

	Basement
	1st Floor
	2nd Floor
	Bedrooms

(1) Exterior

	Wood/Shingle
X	Aluminum/Vinyl
	Brick
X	Insulation

(2) Windows

	Many		Large
X	Avg.	X	Avg.
	Few		Small

	Wood Sash
	Metal Sash
X	Vinyl Sash
	Double Hung
	Horiz. Slide
	Casement
	Double Glass
	Patio Doors
X	Storms & Screens

(3) Roof

X	Gable		Gambrel
	Hip		Mansard
	Flat		Shed

X	Asphalt Shingle

Chimney:

(3) Roof (cont.)

	Eavestrough
X	Insulation
0	Front Overhang
0	Other Overhang

(4) Interior

X	Drywall		Plaster
	Paneled		Wood T&G

Trim & Decoration

	Ex	X	Ord		Min

Size of Closets

	Lg	X	Ord		Small

Doors:		Solid	X	H.C.	

(5) Floors

Kitchen:
Other: Linoleum
Other: Carpeted

(6) Ceilings

X	Drywall		

(7) Excavation

Basement: 0 S.F.
Crawl: 0 S.F.
Slab: 0 S.F.
Height to Joists: 0.0

(8) Basement

	Conc. Block
	Poured Conc.
	Stone
	Treated Wood
	Concrete Floor

(9) Basement Finish

	Recreation SF
	Living SF
	Walkout Doors (B)
	No Floor SF
	Walkout Doors (A)

(10) Floor Support

Joists:
Unsupported Len:
Cntr.Sup:

(11) Heating/Cooling

X	Gas		Oil		Elec.
	Wood		Coal		Steam

X	Forced Warm Air
	Wall Furnace
	Warm & Cool Air
	Heat Pump

	Central Air
	Wood Furnace

(12) Electric

150	Amps Service

No./Qual. of Fixtures

	Ex.	X	Ord.		Min

No. of Elec. Outlets

	Many	X	Ave.		Few

(13) Plumbing

	Average Fixture(s)
2	3 Fixture Bath
	2 Fixture Bath
	Softener, Auto
	Softener, Manual
	Solar Water Heat
	No Plumbing
	Extra Toilet
	Extra Sink
	Separate Shower
	Ceramic Tile Floor
	Ceramic Tile Wains
	Ceramic Tub Alcove
	Vent Fan

(14) Water/Sewer

	Public Water
	Public Sewer
1	Water Well
1	1000 Gal Septic
	2000 Gal Septic

Lump Sum Items:

(15) Built-ins

	Appliance Allow.
	Cook Top
	Dishwasher
	Garbage Disposal
	Bath Heater
	Vent Fan
	Hot Tub
	Unvented Hood
	Vented Hood
	Intercom
	Jacuzzi Tub
	Jacuzzi repl.Tub
	Oven
	Microwave
	Standard Range
	Self Clean Range
	Sauna
	Trash Compactor
	Central Vacuum
	Security System

(15) Fireplaces

	Interior 1 Story
	Interior 2 Story
	2nd/Same Stack
	Two Sided
	Exterior 1 Story
	Exterior 2 Story
	Prefab 1 Story
	Prefab 2 Story
	Heat Circulator
	Raised Hearth
	Wood Stove
	Direct-Vented Gas

Class: Fair
Effec. Age: 19
Floor Area:
Total Base New : 90,767 E.C.F.
Total Depr Cost: 43,568 X 1.297
Estimated T.C.V: 56,508

(16) Porches/Decks

Area	Type
120	WPP
225	WGEP (1 Story)

(17) Garage

Year Built:
Car Capacity:
Class:
Exterior:
Brick Ven.:
Stone Ven.:
Common Wall:
Foundation:
Finished ?:
Auto. Doors:
Mech. Doors:
Area:
% Good:
Storage Area:
No Conc. Floor:

Bsmnt Garage:

Carport Area:
Roof:

Cost Est. for Res. Bldg: 1 Mobile Home SWT/DWT Cls Fair Blt 2002
(11) Heating System: Forced Warm Air
Ground Area = 1216 SF Floor Area = 1216 SF.
Phy/Ab.Phy/Func/Econ/Comb. % Good=48/100/100/100/48
Building Areas

Type	Ext. Walls	Roof/Fnd.	Size	Cost New	Depr. Cost
Main Home	Siding	Comp.Shingle	1216		
			Total:	60,998	29,279
Other Additions/Adjustments					
Skirting, Metal or Vinyl, Vertical			184	2,052	985
Plumbing					
3 Fixture Bath			1	2,745	1,318
Water/Sewer					
1000 Gal Septic			1	4,582	2,199
Water Well, 100 Feet			1	5,680	2,726
Porches					
WPP			120	2,996	1,438
WGEP (1 Story)			225	11,714	5,623
			Totals:	90,767	43,568

Notes:
ECF (RESIDENTIAL) 1.297 => TCV: 56,508

*** Information herein deemed reliable but not guaranteed***

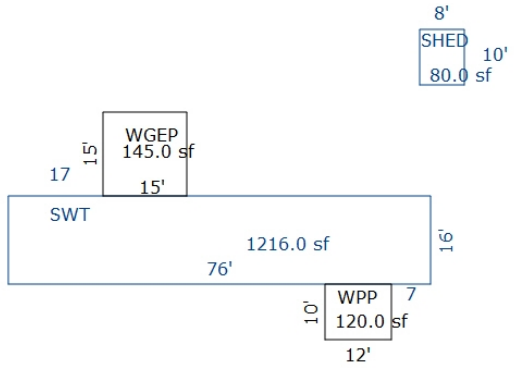

Sketch by Apex Sketch

*** Information herein deemed reliable but not guaranteed***

Parcel Number: 2410-14-4307 Jurisdiction: GREENWOOD TWP County: WEXFORD Printed on 02/15/2024

Grantor	Grantee	Sale Price	Sale Date	Inst. Type	Terms of Sale	Liber & Page	Verified By	Prcnt. Trans.
OSBORNE, RICHARD J & SHARO	SCHNEIDER, CLIFTON, ET A	13,000	09/15/2021	WD	22-OUTLIER	691/721	DEED	100.0
OSBORNE, RICHARD	OSBORNE, RICHARD J & SHARO	100	12/10/2018	WD	21-NOT USED/OTHER	684/1408	DEED	0.0
OSBORNE, RICHARD J & SHARO	OSBORNE, RICHARD J & SHARO	0	12/10/2018	QC	14-INTO/OUT OF TRUST	6841/650	DEED	0.0

Property Address

9051 N 35 RD

Owner's Name/Address

SCHNEIDER, CLIFTON, ET AL
514 HAYHOE RD48819
DANSVILLE MI 48819

Class: RESIDENTIAL-VACANT Zoning:

School: MANTON CONSOLIDATED SCHOOLS

P.R.E. 0%

:

2024 Est TCV 44,413

Building Permit(s)	Date	Number	Status

Improved | X | Vacant

Public Improvements

	Dirt Road
X	Gravel Road
	Paved Road
	Storm Sewer
	Sidewalk
	Water
	Sewer
X	Electric
	Gas
	Curb
	Street Lights
	Standard Utilities
	Underground Utils.

Topography of Site

X	Level
X	Rolling
	Low
	High
	Landscaped
	Swamp
X	Wooded
	Pond
	Waterfront
	Ravine
	Wetland
	Flood Plain
X	OPEN/PINES

Who When What

GLA 05/03/2016 INSPECTION

Land Value Estimates for Land Table 4010.LAND VALUES

Description	Frontage	Depth	* Factors * Front	Depth	Rate	%Adj.	Reason	Value
ACREAGE			9.450 Acres		4,700	100		44,413
ROW			0.130 Acres		0	100		0
			9.58 Total Acres		Total Est. Land Value =			44,413

Year	Land Value	Building Value	Assessed Value	Board of Review	Tribunal/ Other	Taxable Value
2024	22,200	0	22,200			12,899C
2023	12,800	0	12,800			12,285C
2022	11,700	0	11,700			11,700S
2021	12,000	0	12,000			6,154C

Tax Description

PAR COM 169.07 FT N OF SE COR OF SEC: S 88D W 33.02 FT TO W'LY LINE OF RD; S 88D W 1257.25 FT TO E 1/8-LINE; S 88D W 1290.27 FT TO N-S 1/4-LINE; N 161.81 FT; N 88D E 1290.21 FT TO E 1/8-LINE; N 88D E 1257.19 FT TO W'LY LINE OF RD; N 88D E 33.02 FT TO E SEC LINE; S 161.80 FT TO POB. --9.580 A. -- GW. SEC. 14 T24N R10W -MANTON-

Comments/Influences

The Equalizer. Copyright (c) 1999 - 2009. Licensed To: Township of Greenwood, County of Wexford, Michigan

*** Information herein deemed reliable but not guaranteed***

Parcel Number: 2410-14-4308 Jurisdiction: GREENWOOD TWP County: WEXFORD Printed on 02/15/2024

Grantor	Grantee	Sale Price	Sale Date	Inst. Type	Terms of Sale	Liber & Page	Verified By	Prcnt. Trans.
SCHNEIDER, KENNETH M ETAL	SCHNEIDER, PETER F ETAL	0	12/30/2015	WD	21-NOT USED/OTHER	676/1909	DEED	25.0
SCHNEIDER, KENNETH M & MAR	SCHNEIDER, PETER F & HENRY	0	12/17/2015	QC	21-NOT USED/OTHER	6761/998	DEED	0.0

Property Address

9009 N 35 RD

Owner's Name/Address

SCHNEIDER, PETER F ETAL
16610 WESTMORELAND
DETROIT MI 48219

Tax Description

PAR COM AT SE COR OF SEC: S 88D W 33.02 FT TO WLY LINE OF RD S 88D W 1257.31 FT TO E 1/8 LINE; S 88D W 856.12 FT TO NLY LINE OF 8 RD; S 88D W 434.22 FT TO S 1/4 COR; N 33.02 FT TO NLY LINE OF 8 RD; N 136.05 FT; N 88D E 1290.27 FT TO E 1/8 LINE; N 88D E 1257.25 FT TO WLY LINE OF 35 RD; N 88D E 33.02 FT TO E LINE OF SEC; S 169.07 FT TO POB. --10.010 A GW. SEC. 14 T24N R10W -MANTON-

Comments/Influences

The Equalizer. Copyright (c) 1999 - 2009. Licensed To: Township of Greenwood, County of Wexford, Michigan

Class: RESIDENTIAL-IMPROV Zoning:

School: MANTON CONSOLIDATED SCHOOLS

P.R.E. 0%

:

2024 Est TCV 103,493 TCV/TFA: 85.11

Building Permit(s)	Date	Number	Status

X Improved | Vacant

Public Improvements

	Dirt Road
X	Gravel Road
	Paved Road
	Storm Sewer
	Sidewalk
	Water
	Sewer
X	Electric
	Gas
	Curb
	Street Lights
	Standard Utilities
	Underground Utils.

Topography of Site

X	Level
X	Rolling
	Low
	High
	Landscaped
	Swamp
X	Wooded
	Pond
	Waterfront
	Ravine
	Wetland
	Flood Plain
X	OPEN/PINES

Who	When	What
GLA	05/03/2016	INSPECTION

Land Value Estimates for Land Table 4010.LAND VALUES

Description	Frontage	Depth	* Factors * Front	Depth	Rate	%Adj.	Reason	Value
ACREAGE			9.880 Acres		4,649	100		45,927
ROW			0.130 Acres		0	100		0
			10.01 Total Acres		Total Est. Land Value =			45,927

Land Improvement Cost Estimates

Description	Rate	Size	% Good	Cash Value
Wood Frame	25.07	120	42	1,263
Wood Frame	24.77	128	42	1,332
Total Estimated Land Improvements True Cash Value =				2,595

Year	Land Value	Building Value	Assessed Value	Board of Review	Tribunal/ Other	Taxable Value
2024	23,000	28,700	51,700			21,171C
2023	13,000	23,300	36,300			20,163C
2022	11,900	19,600	31,500			19,203C
2021	12,000	16,800	28,800			18,590C

*** Information herein deemed reliable but not guaranteed***

Building Type

	Single Family
X	Mobile Home
	Town Home
	Duplex
	A-Frame

X	Wood Frame

Building Style: SWT/DWT

Yr Built	Remodeled
0	0

Condition: Fair

Room List

	Basement
	1st Floor
	2nd Floor
	Bedrooms

(1) Exterior

	Wood/Shingle
X	Aluminum/Vinyl
	Brick
X	Insulation

(2) Windows

	Many		Large
X	Avg.	X	Avg.
	Few		Small

	Wood Sash
	Metal Sash
X	Vinyl Sash
	Double Hung
	Horiz. Slide
	Casement
	Double Glass
	Patio Doors
X	Storms & Screens

(3) Roof

X	Gable		Gambrel
	Hip		Mansard
	Flat		Shed

X	Asphalt Shingle

Chimney:

(3) Roof (cont.)

	Eavestrough
X	Insulation
0	Front Overhang
0	Other Overhang

(4) Interior

X	Drywall		Plaster
	Paneled		Wood T&G

Trim & Decoration

	Ex	X	Ord		Min

Size of Closets

	Lg	X	Ord		Small

Doors:		Solid	X	H.C.	

(5) Floors

Kitchen:
Other: Linoleum
Other: Carpeted

(6) Ceilings

X	Drywall		

(7) Excavation

Basement: 0 S.F.
Crawl: 0 S.F.
Slab: 0 S.F.
Height to Joists: 0.0

(8) Basement

	Conc. Block
	Poured Conc.
	Stone
	Treated Wood
	Concrete Floor

(9) Basement Finish

	Recreation SF
	Living SF
	Walkout Doors (B)
	No Floor SF
	Walkout Doors (A)

(10) Floor Support

Joists:
Unsupported Len:
Cntr.Sup:

(11) Heating/Cooling

X	Gas		Oil		Elec.
	Wood		Coal		Steam

X	Forced Warm Air
	Wall Furnace
	Warm & Cool Air
	Heat Pump

	Central Air
	Wood Furnace

(12) Electric

150	Amps Service

No./Qual. of Fixtures

	Ex.	X	Ord.		Min

No. of Elec. Outlets

	Many	X	Ave.		Few

(13) Plumbing

	Average Fixture(s)
1	3 Fixture Bath
	2 Fixture Bath
	Softener, Auto
	Softener, Manual
	Solar Water Heat
	No Plumbing
	Extra Toilet
	Extra Sink
	Separate Shower
	Ceramic Tile Floor
	Ceramic Tile Wains
	Ceramic Tub Alcove
	Vent Fan

(14) Water/Sewer

	Public Water
	Public Sewer
1	Water Well
1	1000 Gal Septic
	2000 Gal Septic

Lump Sum Items:

(15) Built-ins

	Appliance Allow.
	Cook Top
	Dishwasher
	Garbage Disposal
	Bath Heater
	Vent Fan
	Hot Tub
	Unvented Hood
	Vented Hood
	Intercom
	Jacuzzi Tub
	Jacuzzi repl.Tub
	Oven
	Microwave
	Standard Range
	Self Clean Range
	Sauna
	Trash Compactor
	Central Vacuum
	Security System

(15) Fireplaces

	Interior 1 Story
	Interior 2 Story
	2nd/Same Stack
	Two Sided
	Exterior 1 Story
	Exterior 2 Story
	Prefab 1 Story
	Prefab 2 Story
	Heat Circulator
	Raised Hearth
	Wood Stove
	Direct-Vented Gas

Class: Fair
Effec. Age: 20
Floor Area:
Total Base New : 92,135 E.C.F.
Total Depr Cost: 42,383 X 1.297
Estimated T.C.V: 54,971

(16) Porches/Decks

Area	Type
20	WPP
36	WPP
96	WGEP (1 Story)
288	WGEP (1 Story)

(17) Garage

Year Built:
Car Capacity:
Class:
Exterior:
Brick Ven.:
Stone Ven.:
Common Wall:
Foundation:
Finished ?:
Auto. Doors:
Mech. Doors:
Area:
% Good:
Storage Area:
No Conc. Floor:

Bsmnt Garage:

Carport Area:
Roof:

Cost Est. for Res. Bldg: 1 Mobile Home SWT/DWT Cls Fair Blt 0
(11) Heating System: Wall Furnace
Ground Area = 1216 SF Floor Area = 1216 SF.
Phy/Ab.Phy/Func/Econ/Comb. % Good=46/100/100/100/46
Building Areas

Type	Ext. Walls	Roof/Fnd.	Size	Cost New	Depr. Cost
Main Home	Ribbed	Metal	1216		
			Total:	55,940	25,733
Other Additions/Adjustments					
Skirting, Metal or Vinyl, Vertical			138	1,539	708
Water/Sewer					
1000 Gal Septic			1	4,582	2,108
Water Well, 100 Feet			1	5,680	2,613
Porches					
WPP			36	1,647	758
WGEP (1 Story)			96	6,814	3,134
WGEP (1 Story)			288	14,927	6,866
WPP			20	1,006	463
			Totals:	92,135	42,383

Notes:
ECF (RESIDENTIAL) 1.297 => TCV: 54,971

*** Information herein deemed reliable but not guaranteed***

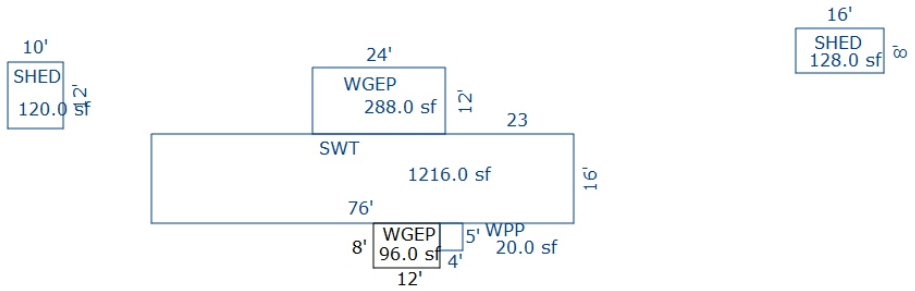

Sketch by Apex Sketch

*** Information herein deemed reliable but not guaranteed***

Parcel Number: 2410-15-1101 Jurisdiction: GREENWOOD TWP County: WEXFORD Printed on 02/15/2024

Grantor	Grantee	Sale Price	Sale Date	Inst. Type	Terms of Sale	Liber & Page	Verified By	Prcnt. Trans.

Property Address

Owner's Name/Address

MICHIGAN DEPT OF
P O BOS 30735
GRANTS ADMINISTRATION
LANSING MI 48909-8235

Tax Description

N 1/2 OF NE 1/4 GW. SEC. 15 T24N R10W 80 A. - MANTON - SEE ACT 513 ROLL FOR VALUE

Comments/Influences

The Equalizer. Copyright (c) 1999 - 2009. Licensed To: Township of Greenwood, County of Wexford, Michigan

Class: AGRICULTURAL-VACAN Zoning:

School: MANTON CONSOLIDATED SCHOOLS

P.R.E. 100% / /

:

2024 Est TCV 201,002

Building Permit(s)	Date	Number	Status

	Improved	X	Vacant

	Public Improvements
	Dirt Road
	Gravel Road
X	Paved Road
	Storm Sewer
	Sidewalk
	Water
	Sewer
X	Electric
	Gas
	Curb
	Street Lights
	Standard Utilities
	Underground Utils.

	Topography of Site
X	Level
X	Rolling
	Low
X	High
	Landscaped
	Swamp
X	Wooded
	Pond
	Waterfront
	Ravine
	Wetland
	Flood Plain
X	OPEN

Who	When	What
GLA	09/07/2016	INSPECTION

Land Value Estimates for Land Table 4010.LAND VALUES

Description	Frontage	Depth	* Factors * Front	Depth	Rate	%Adj.	Reason	Value
ACREAGE			79.000 Acres		2,544	100		201,002
			1.000 Acres		0	100		0
			80.00 Total Acres		Total Est. Land Value =			201,002

Year	Land Value	Building Value	Assessed Value	Board of Review	Tribunal/ Other	Taxable Value
2024	100,500	0	100,500			36,718C
2023	85,100	0	85,100			34,970C
2022	67,200	0	67,200			33,305C
2021	61,400	0	61,400			32,242C

*** Information herein deemed reliable but not guaranteed***

Parcel Number: 2410-15-1301 Jurisdiction: GREENWOOD TWP County: WEXFORD Printed on 02/15/2024

Grantor	Grantee	Sale Price	Sale Date	Inst. Type	Terms of Sale	Liber & Page	Verified By	Prcnt. Trans.
PISZCZEK, KEVIN J & LISA M	PISZCZEK, KEVIN J & LISA	0	04/04/2016	PTA	14-INTO/OUT OF TRUST		DEED	0.0
SCHILLEMAN, LORETTA R TRUS	SCHILLEMAN, LORETTA R ETAI	0	05/20/2013	WD	09-FAMILY	659/2620	DEED	0.0

Property Address

Owner's Name/Address

KAULE, JANE LE ETAL
P O BOX 93
TRUST
KINGSLEY MI 49649

Tax Description

S 1/2 OF NE 1/4 & S 1/2 OF NW 1/4 GW. SEC. 15 T24N R10W - MANTON 160 A. COMMERCIAL FOREST '89

Comments/Influences

The Equalizer. Copyright (c) 1999 - 2009. Licensed To: Township of Greenwood, County of Wexford, Michigan

Class: RESIDENTIAL-VACANT Zoning:

School: MANTON CONSOLIDATED SCHOOLS

P.R.E. 0%

:

2024 Est TCV 0

Building Permit(s)	Date	Number	Status

	Improved	X	Vacant

	Public Improvements
	Dirt Road
	Gravel Road
X	Paved Road
	Storm Sewer
	Sidewalk
	Water
	Sewer
X	Electric
	Gas
	Curb
	Street Lights
	Standard Utilities
	Underground Utils.

	Topography of Site
X	Level
X	Rolling
	Low
X	High
	Landscaped
	Swamp
X	Wooded
	Pond
	Waterfront
	Ravine
	Wetland
	Flood Plain

Who	When	What
GLA	05/03/2016	INSPECTION

Land Value Estimates for Land Table 4010.LAND VALUES

Description	Frontage	Depth	* Factors * Front	Depth	Rate	%Adj.	Reason	Value
ACREAGE			159.000 Acres		2,480	100		394,320
			1.000 Acres		0	100		0
			160.00 Total Acres		Total Est. Land Value =			394,320

Year	Land Value	Building Value	Assessed Value	Board of Review	Tribunal/ Other	Taxable Value
2024	0	0	0			0
2023	0	0	0			0
2022	0	0	0			0
2021	0	0	0			0

*** Information herein deemed reliable but not guaranteed***

Parcel Number: 2410-15-2101 Jurisdiction: GREENWOOD TWP County: WEXFORD Printed on 02/15/2024

Grantor	Grantee	Sale Price	Sale Date	Inst. Type	Terms of Sale	Liber & Page	Verified By	Prcnt. Trans.
KAMEN, ROBERT R & CHERYL A	KAMEN MICHAEL D & STACIE A	0	07/05/2023	QC	21-NOT USED/OTHER	695-1787	DEED	50.0
KAMEN, ROBERT R & CHERYL A	KAMEN, ROBERT R & CHERYL A	0	05/06/2015	QC	18-LIFE ESTATE	675/589	DEED	0.0
KAMEN, ROBERT R & CHERYL A	KAMEN, ROBERT R & CHERYL A	0	07/09/2013	QC	18-LIFE ESTATE	660/2207	DEED	0.0
KAMEN, ROBERT R & CHERYL A	KAMEN, ROBERT R & CHERYL A	0	10/03/2012	QC	18-LIFE ESTATE	652/789	DEED	0.0

Property Address

9858 N 31 RD

Owner's Name/Address

KAMEN MICHAEL D & STACIE A
7422 ELMCREST
MOUNT MORRIS MI 48458

Tax Description

S 1/2 OF N 1/2 OF NW 1/4 40 A. GW. SEC. 15 T24N R10W -MANTON-

Comments/Influences

Class: RESIDENTIAL-IMPROV Zoning:

School: MANTON CONSOLIDATED SCHOOLS

P.R.E. 0%

:

2024 Est TCV 246,310 TCV/TFA: 141.07

Building Permit(s)	Date	Number	Status
RESIDENTIAL - REMODEL	07/07/2003	PE15433	
RESIDENTIAL - REMODEL	06/27/2003	PP3067	
RESIDENTIAL - REMODEL	04/14/2003	PB11458	

X Improved | Vacant

	Public Improvements
	Dirt Road
	Gravel Road
X	Paved Road
	Storm Sewer
	Sidewalk
	Water
	Sewer
X	Electric
	Gas
	Curb
	Street Lights
	Standard Utilities
	Underground Utils.

	Topography of Site
X	Level
X	Rolling
	Low
X	High
	Landscaped
	Swamp
X	Wooded
	Pond
	Waterfront
	Ravine
	Wetland
	Flood Plain

Who When What

GLA 05/03/2016 INSPECTION

Land Value Estimates for Land Table 4010.LAND VALUES

Description	Frontage	Depth	* Factors * Front	Depth	Rate	%Adj.	Reason	Value
ACREAGE			39.500 Acres		2,722	100		107,519
ROW			0.500 Acres		0	100		0
			40.00 Total Acres		Total Est. Land Value =			107,519

Land Improvement Cost Estimates

Description	Rate	Size	% Good	Cash Value
D/W/P: Asphalt Paving	3.12	4600	46	6,602
Total Estimated Land Improvements True Cash Value =				6,602

Year	Land Value	Building Value	Assessed Value	Board of Review	Tribunal/ Other	Taxable Value
2024	53,800	69,400	123,200			96,363S
2023	47,500	58,200	105,700			66,217C
2022	37,700	50,300	88,000			63,064C
2021	33,700	46,700	80,400			61,050C

The Equalizer. Copyright (c) 1999 - 2009. Licensed To: Township of Greenwood, County of Wexford, Michigan

*** Information herein deemed reliable but not guaranteed***

Building Type

	Single Family
X	Mobile Home
	Town Home
	Duplex
	A-Frame

X	Wood Frame

Building Style: SWT/DWT

Yr Built	Remodeled
1998	0

Condition: Good

Room List

	Basement
	1st Floor
	2nd Floor
	Bedrooms

(1) Exterior

	Wood/Shingle
X	Aluminum/Vinyl
	Brick
X	Insulation

(2) Windows

	Many		Large
X	Avg.	X	Avg.
	Few		Small

	Wood Sash
	Metal Sash
X	Vinyl Sash
	Double Hung
	Horiz. Slide
	Casement
	Double Glass
	Patio Doors
X	Storms & Screens

(3) Roof

X	Gable		Gambrel
	Hip		Mansard
	Flat		Shed

X	Asphalt Shingle

Chimney:

(3) Roof (cont.)

	Eavestrough
X	Insulation
0	Front Overhang
0	Other Overhang

(4) Interior

X	Drywall		Plaster
	Paneled		Wood T&G

Trim & Decoration

	Ex	X	Ord		Min

Size of Closets

	Lg	X	Ord		Small

Doors:		Solid	X	H.C.	

(5) Floors

Kitchen:
Other: Linoleum
Other: Carpeted

(6) Ceilings

X	Drywall		

(7) Excavation

Basement: 0 S.F.
Crawl: 0 S.F.
Slab: 0 S.F.
Height to Joists: 0.0

(8) Basement

	Conc. Block
	Poured Conc.
	Stone
	Treated Wood
	Concrete Floor

(9) Basement Finish

	Recreation SF
	Living SF
	Walkout Doors (B)
	No Floor SF
	Walkout Doors (A)

(10) Floor Support

Joists:
Unsupported Len:
Cntr.Sup:

(11) Heating/Cooling

X	Gas		Oil		Elec.
	Wood		Coal		Steam

X	Forced Warm Air
	Wall Furnace
	Warm & Cool Air
	Heat Pump
	Central Air
	Wood Furnace

(12) Electric

150	Amps Service

No./Qual. of Fixtures

	Ex.	X	Ord.		Min

No. of Elec. Outlets

	Many	X	Ave.		Few

(13) Plumbing

2	Average Fixture(s)
	3 Fixture Bath
	2 Fixture Bath
	Softener, Auto
	Softener, Manual
	Solar Water Heat
	No Plumbing
	Extra Toilet
	Extra Sink
	Separate Shower
	Ceramic Tile Floor
	Ceramic Tile Wains
	Ceramic Tub Alcove
	Vent Fan

(14) Water/Sewer

	Public Water
	Public Sewer
1	Water Well
1	1000 Gal Septic
	2000 Gal Septic

Lump Sum Items:

(15) Built-ins

	Appliance Allow.
	Cook Top
	Dishwasher
	Garbage Disposal
	Bath Heater
	Vent Fan
	Hot Tub
	Unvented Hood
	Vented Hood
	Intercom
	Jacuzzi Tub
	Jacuzzi repl.Tub
	Oven
	Microwave
	Standard Range
	Self Clean Range
	Sauna
	Trash Compactor
	Central Vacuum
	Security System

(15) Fireplaces

	Interior 1 Story
	Interior 2 Story
	2nd/Same Stack
	Two Sided
	Exterior 1 Story
	Exterior 2 Story
	Prefab 1 Story
	Prefab 2 Story
	Heat Circulator
	Raised Hearth
	Wood Stove
	Direct-Vented Gas

Class: Average
Effec. Age: 23
Floor Area:
Total Base New : 142,826 E.C.F.
Total Depr Cost: 69,986 X 1.297
Estimated T.C.V: 90,772

(16) Porches/Decks

Area	Type
120	Treated Wood
128	Treated Wood

(17) Garage

Year Built:
Car Capacity:
Class: C
Exterior: Pole
Brick Ven.: 0
Stone Ven.: 0
Common Wall: Detache
Foundation: 18 Inch
Finished ?:
Auto. Doors: 0
Mech. Doors: 0
Area: 960
% Good: 0
Storage Area: 0
No Conc. Floor: 0

Bsmnt Garage:

Carport Area:
Roof:

Cost Est. for Res. Bldg: 1 Mobile Home SWT/DWT Cls Average Blt 1998
(11) Heating System: Forced Warm Air
Ground Area = 1296 SF Floor Area = 1296 SF.
Phy/Ab.Phy/Func/Econ/Comb. % Good=49/100/100/100/49
Building Areas

Type	Ext. Walls	Roof/Fnd.	Size	Cost New	Depr. Cost
Main Home	Siding	Comp.Shingle	1296		
			Total:	88,265	43,251
Other Additions/Adjustments					
42" frost-free footings, foundation			150	8,910	4,366
Plumbing					
3 Fixture Bath			1	3,075	1,507
Water/Sewer					
1000 Gal Septic			1	4,899	2,401
Water Well, 100 Feet			1	5,849	2,866
Deck					
Treated Wood			120	2,968	1,454
Treated Wood			128	3,110	1,524
Garages					
Class: C Exterior: Pole (Unfinished)					
Base Cost			960	24,490	12,000
Local Cost Items					
POLE LEAN TO			240	1,260	617
			Totals:	142,826	69,986

Notes:

ECF (RESIDENTIAL) 1.297 => TCV: 90,772

*** Information herein deemed reliable but not guaranteed***

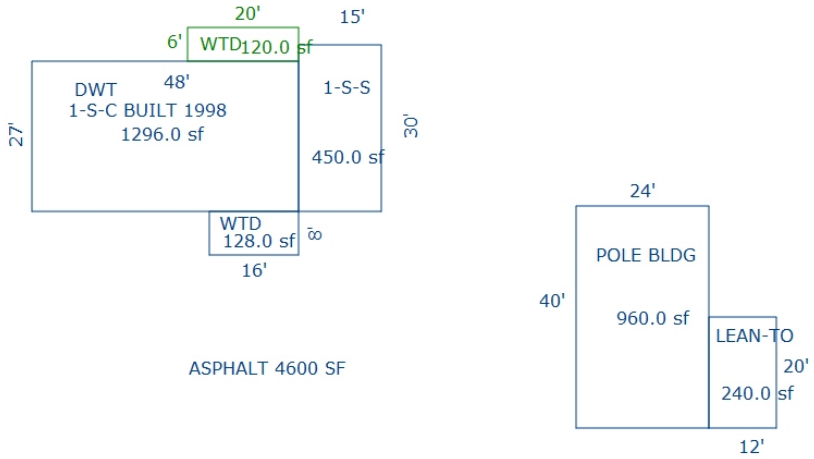

Sketch by Apex Sketch

*** Information herein deemed reliable but not guaranteed***

Building Type

X	Single Family
	Mobile Home
	Town Home
	Duplex
	A-Frame
X	Wood Frame

Building Style: PLAIN

Yr Built	Remodeled
0	0

Condition: Good

Room List

	Basement
	1st Floor
	2nd Floor
	Bedrooms

(1) Exterior

X	Wood/Shingle
	Aluminum/Vinyl
	Brick
X	Insulation

(2) Windows

X	Many		Large
	Avg.	X	Avg.
	Few		Small

	Wood Sash
	Metal Sash
X	Vinyl Sash
	Double Hung
	Horiz. Slide
	Casement
	Double Glass
	Patio Doors
X	Storms & Screens

(3) Roof

X	Gable		Gambrel
	Hip		Mansard
	Flat		Shed

X	Asphalt Shingle

Chimney:

(3) Roof (cont.)

	Eavestrough
X	Insulation
0	Front Overhang
0	Other Overhang

(4) Interior

X	Drywall		Plaster
	Paneled		Wood T&G

Trim & Decoration

	Ex	X	Ord		Min

Size of Closets

	Lg	X	Ord		Small

Doors:		Solid	X	H.C.	

(5) Floors

Kitchen:
Other: Linoleum
Other: Carpeted

(6) Ceilings

X	Drywall		

(7) Excavation

Basement: 0 S.F.
Crawl: 0 S.F.
Slab: 450 S.F.
Height to Joists: 0.0

(8) Basement

	Conc. Block
	Poured Conc.
	Stone
	Treated Wood
	Concrete Floor

(9) Basement Finish

	Recreation SF
	Living SF
	Walkout Doors (B)
	No Floor SF
	Walkout Doors (A)

(10) Floor Support

Joists:
Unsupported Len:
Cntr.Sup:

(11) Heating/Cooling

X	Gas		Oil		Elec.
	Wood		Coal		Steam

	Forced Air w/o Ducts
X	Forced Air w/ Ducts
	Forced Hot Water
	Electric Baseboard
	Elec. Ceil. Radiant
	Radiant (in-floor)
	Electric Wall Heat
	Space Heater
	Wall/Floor Furnace
	Forced Heat & Cool
	Heat Pump
	No Heating/Cooling

	Central Air
	Wood Furnace

(12) Electric

150	Amps Service

No./Qual. of Fixtures

	Ex.	X	Ord.		Min

No. of Elec. Outlets

	Many	X	Ave.		Few

(13) Plumbing

1	Average Fixture(s)
	3 Fixture Bath
	2 Fixture Bath
	Softener, Auto
	Softener, Manual
	Solar Water Heat
	No Plumbing
	Extra Toilet
	Extra Sink
	Separate Shower
	Ceramic Tile Floor
	Ceramic Tile Wains
	Ceramic Tub Alcove
	Vent Fan

(14) Water/Sewer

	Public Water
	Public Sewer
	Water Well
	1000 Gal Septic
	2000 Gal Septic

Lump Sum Items:

(15) Built-ins

	Appliance Allow.
	Cook Top
	Dishwasher
	Garbage Disposal
	Bath Heater
	Vent Fan
	Hot Tub
	Unvented Hood
	Vented Hood
	Intercom
	Jacuzzi Tub
	Jacuzzi repl.Tub
	Oven
	Microwave
	Standard Range
	Self Clean Range
	Sauna
	Trash Compactor
	Central Vacuum
	Security System

(15) Fireplaces

	Interior 1 Story
	Interior 2 Story
	2nd/Same Stack
	Two Sided
	Exterior 1 Story
	Exterior 2 Story
	Prefab 1 Story
	Prefab 2 Story
	Heat Circulator
	Raised Hearth
	Wood Stove
	Direct-Vented Gas

Class: CD
Effec. Age: 44
Floor Area: 450
Total Base New : 57,023 E.C.F.
Total Depr Cost: 31,933 X 1.297
Estimated T.C.V: 41,417

(16) Porches/Decks

Area	Type

(17) Garage

Year Built:
Car Capacity:
Class:
Exterior:
Brick Ven.:
Stone Ven.:
Common Wall:
Foundation:
Finished ?:
Auto. Doors:
Mech. Doors:
Area:
% Good:
Storage Area:
No Conc. Floor:

Bsmnt Garage:

Carport Area:
Roof:

Cost Est. for Res. Bldg: 2 Single Family PLAIN Cls CD Blt 0
(11) Heating System: Forced Air w/ Ducts
Ground Area = 450 SF Floor Area = 450 SF.
Phy/Ab.Phy/Func/Econ/Comb. % Good=56/100/100/100/56
Building Areas

Stories	Exterior	Foundation	Size	Cost New	Depr. Cost
1 Story	Siding	Slab	450		
			Total:	57,023	31,933

Other Additions/Adjustments

Totals:	57,023	31,933

Notes:

ECF (RESIDENTIAL) 1.297 => TCV: 41,417

*** Information herein deemed reliable but not guaranteed***

Parcel Number: 2410-15-2102 Jurisdiction: GREENWOOD TWP County: WEXFORD Printed on 02/15/2024

Grantor	Grantee	Sale Price	Sale Date	Inst. Type	Terms of Sale	Liber & Page	Verified By	Prcnt. Trans.
MACK JR., KENNETH E.	BRANDT, WILLIAM S.	46,500	08/04/1992	WD	03-ARM'S LENGTH	330:625	DEED	0.0
COSCIONE, FRANCESCO	MACK, KENNETH E.	19,000	06/09/1989	WD	03-ARM'S LENGTH	315:936	DEED	0.0

Property Address

9990 N 31 RD

Owner's Name/Address

BRANDT, WILLIAM S.
16094 TRENTON AVE
CEDAR SPRINGS MI 49319

Tax Description

N 1/2 OF N 1/2 OF NW 1/4 40 A. GW. SEC. 15 T24N R10W -MANTON-

Comments/Influences

The Equalizer. Copyright (c) 1999 - 2009. Licensed To: Township of Greenwood, County of Wexford, Michigan

Class: RESIDENTIAL-IMPROV Zoning:

School: MANTON CONSOLIDATED SCHOOLS

P.R.E. 0%

:

2024 Est TCV 165,747 TCV/TFA: 218.09

Building Permit(s)	Date	Number	Status

X Improved | Vacant

	Public Improvements
	Dirt Road
X	Gravel Road
	Paved Road
	Storm Sewer
	Sidewalk
	Water
	Sewer
X	Electric
	Gas
	Curb
	Street Lights
	Standard Utilities
	Underground Utils.

	Topography of Site
X	Level
X	Rolling
	Low
	High
	Landscaped
	Swamp
X	Wooded
	Pond
	Waterfront
	Ravine
	Wetland
	Flood Plain
X	OPEN/PINES

Who	When	What
GLA	05/03/2016	INSPECTION

Land Value Estimates for Land Table 4010.LAND VALUES

Description	Frontage	Depth	* Factors * Front	Depth	Rate	%Adj.	Reason	Value
ACREAGE			39.500 Acres		2,722	100		107,519
ROW			0.500 Acres		0	100		0
			40.00 Total Acres		Total Est. Land Value =			107,519

Land Improvement Cost Estimates

Description	Rate	Size	% Good	Cash Value
D/W/P: 4in Concrete	6.11	102	45	280
Wood Frame	22.35	120	42	1,126
Total Estimated Land Improvements True Cash Value =				1,406

Year	Land Value	Building Value	Assessed Value	Board of Review	Tribunal/ Other	Taxable Value
2024	53,800	29,100	82,900			29,245C
2023	47,500	23,500	71,000			27,853C
2022	37,700	19,600	57,300			26,527C
2021	33,700	19,500	53,200			25,680C

*** Information herein deemed reliable but not guaranteed***

Building Type

X	Single Family
	Mobile Home
	Town Home
	Duplex
	A-Frame
X	Wood Frame

Building Style: PLAIN

Yr Built	Remodeled
0	0

Condition: Good

Room List

	Basement
	1st Floor
	2nd Floor
	Bedrooms

(1) Exterior

	Wood/Shingle
X	Aluminum/Vinyl
	Brick
X	Insulation

(2) Windows

	Many		Large
X	Avg.	X	Avg.
	Few		Small

	Wood Sash
	Metal Sash
X	Vinyl Sash
	Double Hung
	Horiz. Slide
	Casement
	Double Glass
	Patio Doors
X	Storms & Screens

(3) Roof

X	Gable		Gambrel
	Hip		Mansard
	Flat		Shed

X	Asphalt Shingle

Chimney:

(3) Roof (cont.)

	Eavestrough
X	Insulation
0	Front Overhang
0	Other Overhang

(4) Interior

X	Drywall		Plaster
	Paneled		Wood T&G

Trim & Decoration

	Ex	X	Ord		Min

Size of Closets

	Lg	X	Ord		Small

Doors:		Solid	X	H.C.	

(5) Floors

Kitchen:
Other: Linoleum
Other: Carpeted

(6) Ceilings

X	Drywall

(7) Excavation

Basement: 0 S.F.
Crawl: 760 S.F.
Slab: 0 S.F.
Height to Joists: 0.0

(8) Basement

	Conc. Block
	Poured Conc.
	Stone
	Treated Wood
	Concrete Floor

(9) Basement Finish

	Recreation SF
	Living SF
	Walkout Doors (B)
	No Floor SF
	Walkout Doors (A)

(10) Floor Support

Joists:
Unsupported Len:
Cntr.Sup:

(11) Heating/Cooling

X	Gas		Oil		Elec.
	Wood		Coal		Steam

	Forced Air w/o Ducts
X	Forced Air w/ Ducts
	Forced Hot Water
	Electric Baseboard
	Elec. Ceil. Radiant
	Radiant (in-floor)
	Electric Wall Heat
	Space Heater
	Wall/Floor Furnace
	Forced Heat & Cool
	Heat Pump
	No Heating/Cooling

	Central Air
	Wood Furnace

(12) Electric

150	Amps Service

No./Qual. of Fixtures

	Ex.	X	Ord.		Min

No. of Elec. Outlets

	Many	X	Ave.		Few

(13) Plumbing

1	Average Fixture(s)
	3 Fixture Bath
	2 Fixture Bath
	Softener, Auto
	Softener, Manual
	Solar Water Heat
	No Plumbing
	Extra Toilet
	Extra Sink
	Separate Shower
	Ceramic Tile Floor
	Ceramic Tile Wains
	Ceramic Tub Alcove
	Vent Fan

(14) Water/Sewer

	Public Water
	Public Sewer
1	Water Well
1	1000 Gal Septic
	2000 Gal Septic

Lump Sum Items:

(15) Built-ins

	Appliance Allow.
	Cook Top
	Dishwasher
	Garbage Disposal
	Bath Heater
	Vent Fan
	Hot Tub
	Unvented Hood
	Vented Hood
	Intercom
	Jacuzzi Tub
	Jacuzzi repl.Tub
	Oven
	Microwave
	Standard Range
	Self Clean Range
	Sauna
	Trash Compactor
	Central Vacuum
	Security System

(15) Fireplaces

	Interior 1 Story
	Interior 2 Story
	2nd/Same Stack
	Two Sided
	Exterior 1 Story
	Exterior 2 Story
	Prefab 1 Story
	Prefab 2 Story
	Heat Circulator
	Raised Hearth
	Wood Stove
	Direct-Vented Gas

Class: D
Effec. Age: 62
Floor Area: 760
Total Base New : 97,356 E.C.F.
Total Depr Cost: 43,810 X 1.297
Estimated T.C.V: 56,822

(16) Porches/Decks

Area	Type

(17) Garage

Year Built:
Car Capacity:
Class:
Exterior:
Brick Ven.:
Stone Ven.:
Common Wall:
Foundation:
Finished ?:
Auto. Doors:
Mech. Doors:
Area:
% Good:
Storage Area:
No Conc. Floor:

Bsmnt Garage:

Carport Area:
Roof:

Cost Est. for Res. Bldg: 1 Single Family PLAIN Cls D Blt 0
(11) Heating System: Forced Air w/ Ducts
Ground Area = 760 SF Floor Area = 760 SF.
Phy/Ab.Phy/Func/Econ/Comb. % Good=45/100/100/100/45
Building Areas

Stories	Exterior	Foundation	Size	Cost New	Depr. Cost
1 Story	Siding	Crawl Space	760		
			Total:	87,518	39,383
Other Additions/Adjustments					
Water/Sewer					
1000 Gal Septic			1	4,293	1,932
Water Well, 100 Feet			1	5,545	2,495
			Totals:	97,356	43,810

Notes:

ECF (RESIDENTIAL) 1.297 => TCV: 56,822

*** Information herein deemed reliable but not guaranteed***

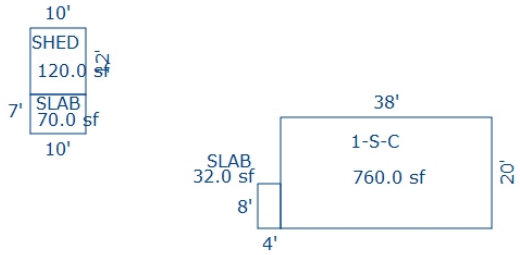

Sketch by Apex Sketch

*** Information herein deemed reliable but not guaranteed***

Parcel Number: 2410-15-3101 Jurisdiction: GREENWOOD TWP County: WEXFORD Printed on 02/15/2024

Grantor	Grantee	Sale Price	Sale Date	Inst. Type	Terms of Sale	Liber & Page	Verified By	Prcnt. Trans.
SIKORA, ROBERT	SIKORA, ROBERT &	0	12/06/2017	WD	21-NOT USED/OTHER	681 /1740	DEED	0.0
OCWEN LOAN SERVICING LLC	SIKORA, ROBERT	59,864	02/03/2017	CD	03-ARM'S LENGTH	679/2047	DEED	100.0
FEDERAL HOME LOAN MORTGAGE	OCWEN LOAN SERVICING LLC	0	06/03/2014	QC	21-NOT USED/OTHER	668/1562	DEED	0.0
CLEVELAND, HOWARD	FEDERAL HOME LOAN MORTGAGE	0	03/08/2013	SD	10-FORECLOSURE	656/2073	DEED	0.0

Property Address

9324 N 31 RD

Owner's Name/Address

SIKORA, ROBERT &
HENDGES, MARCY, JTWRO
9324 N 31 RD
MANTON MI 49663

Tax Description

S 1/2 OF N 1/2 OF SW 1/4 --40 A M/L-- GW. SEC. 15 T24N R10W - MANTON

Comments/Influences

Class: RESIDENTIAL-IMPROV Zoning:

School: MANTON CONSOLIDATED SCHOOLS

P.R.E. 100% 12/07/2017

:

2024 Est TCV 170,144 TCV/TFA: 150.04

Building Permit(s)	Date	Number	Status
Garage, Detached	09/14/2020	PB20-0139	ENTERED
RESIDENTIAL - NEW	12/21/1999	PE12660	
RESIDENTIAL - NEW	12/10/1999	PM3813	

X Improved | Vacant

	Public Improvements
	Dirt Road
	Gravel Road
X	Paved Road
	Storm Sewer
	Sidewalk
	Water
	Sewer
X	Electric
	Gas
	Curb
	Street Lights
	Standard Utilities
	Underground Utils.

	Topography of Site
X	Level
X	Rolling
	Low
X	High
	Landscaped
X	Swamp
X	Wooded
	Pond
	Waterfront
	Ravine
	Wetland
	Flood Plain
X	OPEN

Who	When	What
DB	10/23/2023	INSPECTION
GLA	05/13/2021	INSPECTION
GLA	08/01/2014	INSPECTION

Land Value Estimates for Land Table 4010.LAND VALUES

Description	Frontage	Depth	* Factors * Front	Depth	Rate	%Adj.	Reason	Value
ACREAGE			39.490 Acres		2,722	100		107,492
ROW			0.510 Acres		0	100		0
			40.00 Total Acres		Total Est. Land Value =			107,492

Year	Land Value	Building Value	Assessed Value	Board of Review	Tribunal/ Other	Taxable Value
2024	53,700	31,400	85,100			51,893C
2023	47,500	23,800	71,300			49,422C
2022	37,700	19,900	57,600			47,069C
2021	33,600	14,700	48,300			45,566C

The Equalizer. Copyright (c) 1999 - 2009.
Licensed To: Township of Greenwood, County of Wexford, Michigan

*** Information herein deemed reliable but not guaranteed***

Building Type

	Single Family
X	Mobile Home
	Town Home
	Duplex
	A-Frame

X	Wood Frame

Building Style: SWT/DWT

Yr Built	Remodeled
1999	0

Condition: Good

Room List

	Basement
	1st Floor
	2nd Floor
	Bedrooms

(1) Exterior

	Wood/Shingle
X	Aluminum/Vinyl
	Brick
X	Insulation

(2) Windows

	Many		Large
X	Avg.	X	Avg.
	Few		Small

	Wood Sash
	Metal Sash
X	Vinyl Sash
	Double Hung
	Horiz. Slide
	Casement
	Double Glass
	Patio Doors
X	Storms & Screens

(3) Roof

X	Gable		Gambrel
	Hip		Mansard
	Flat		Shed

X	Asphalt Shingle

Chimney:

(3) Roof (cont.)

	Eavestrough
X	Insulation
0	Front Overhang
0	Other Overhang

(4) Interior

X	Drywall		Plaster
	Paneled		Wood T&G

Trim & Decoration

	Ex	X	Ord		Min

Size of Closets

	Lg	X	Ord		Small

Doors:		Solid	X	H.C.	

(5) Floors

Kitchen:
Other: Linoleum
Other: Carpeted

(6) Ceilings

X	Drywall		

(7) Excavation

Basement: 0 S.F.
Crawl: 0 S.F.
Slab: 0 S.F.
Height to Joists: 0.0

(8) Basement

	Conc. Block
	Poured Conc.
	Stone
	Treated Wood
	Concrete Floor

(9) Basement Finish

	Recreation SF
	Living SF
	Walkout Doors (B)
	No Floor SF
	Walkout Doors (A)

(10) Floor Support

Joists:
Unsupported Len:
Cntr.Sup:

(11) Heating/Cooling

X	Gas		Oil		Elec.
	Wood		Coal		Steam

X	Forced Warm Air
	Wall Furnace
	Warm & Cool Air
	Heat Pump

	Central Air
	Wood Furnace

(12) Electric

150	Amps Service

No./Qual. of Fixtures

	Ex.	X	Ord.		Min

No. of Elec. Outlets

	Many	X	Ave.		Few

(13) Plumbing

	Average Fixture(s)
1	3 Fixture Bath
	2 Fixture Bath
	Softener, Auto
	Softener, Manual
	Solar Water Heat
	No Plumbing
	Extra Toilet
	Extra Sink
	Separate Shower
	Ceramic Tile Floor
	Ceramic Tile Wains
	Ceramic Tub Alcove
	Vent Fan

(14) Water/Sewer

	Public Water
	Public Sewer
1	Water Well
1	1000 Gal Septic
	2000 Gal Septic

Lump Sum Items:

(15) Built-ins

	Appliance Allow.
	Cook Top
	Dishwasher
	Garbage Disposal
	Bath Heater
	Vent Fan
	Hot Tub
	Unvented Hood
	Vented Hood
	Intercom
	Jacuzzi Tub
	Jacuzzi repl.Tub
	Oven
	Microwave
	Standard Range
	Self Clean Range
	Sauna
	Trash Compactor
	Central Vacuum
	Security System

(15) Fireplaces

	Interior 1 Story
	Interior 2 Story
	2nd/Same Stack
	Two Sided
	Exterior 1 Story
	Exterior 2 Story
	Prefab 1 Story
	Prefab 2 Story
	Heat Circulator
	Raised Hearth
	Wood Stove
	Direct-Vented Gas

Class: Fair
Effec. Age: 25
Floor Area:
Total Base New : 138,015 E.C.F.
Total Depr Cost: 48,305 X 1.297
Estimated T.C.V: 62,652

(16) Porches/Decks

Area	Type
243	WSEP (1 Story)
18	CCP (1 Story)
16	Treated Wood

(17) Garage

Year Built:
Car Capacity:
Class: D
Exterior: Pole
Brick Ven.: 0
Stone Ven.: 0
Common Wall: Detache
Foundation: 18 Inch
Finished ?:
Auto. Doors: 0
Mech. Doors: 0
Area: 960
% Good: 0
Storage Area: 0
No Conc. Floor: 0

Bsmnt Garage:

Carport Area:
Roof:

Cost Est. for Res. Bldg: 1 Mobile Home SWT/DWT Cls Fair Blt 1999
(11) Heating System: Forced Warm Air
Ground Area = 1134 SF Floor Area = 1134 SF.
Phy/Ab.Phy/Func/Econ/Comb. % Good=35/100/100/100/35
Building Areas

Type	Ext. Walls	Roof/Fnd.	Size	Cost New	Depr. Cost
Main Home	Siding	Comp.Shingle	1134		
			Total:	70,888	24,811
Other Additions/Adjustments					
Skirting, Metal or Vinyl, Vertical			152	1,695	593
Water/Sewer					
1000 Gal Septic			1	4,582	1,604
Water Well, 100 Feet			1	5,680	1,988
Porches					
WSEP (1 Story)			243	7,312	2,559
CCP (1 Story)			18	854	299
Garages					
Class: D Exterior: Pole (Unfinished)					
Base Cost			960	19,334	6,767
Class: CD Exterior: Pole (Unfinished)					
Base Cost			1200	26,100	9,135
Deck					
Treated Wood			16	720	252
Local Cost Items					
METAL CARPORT			1	850	297
			Totals:	138,015	48,305

Notes:

ECF (RESIDENTIAL) 1.297 => TCV: 62,652

*** Information herein deemed reliable but not guaranteed***

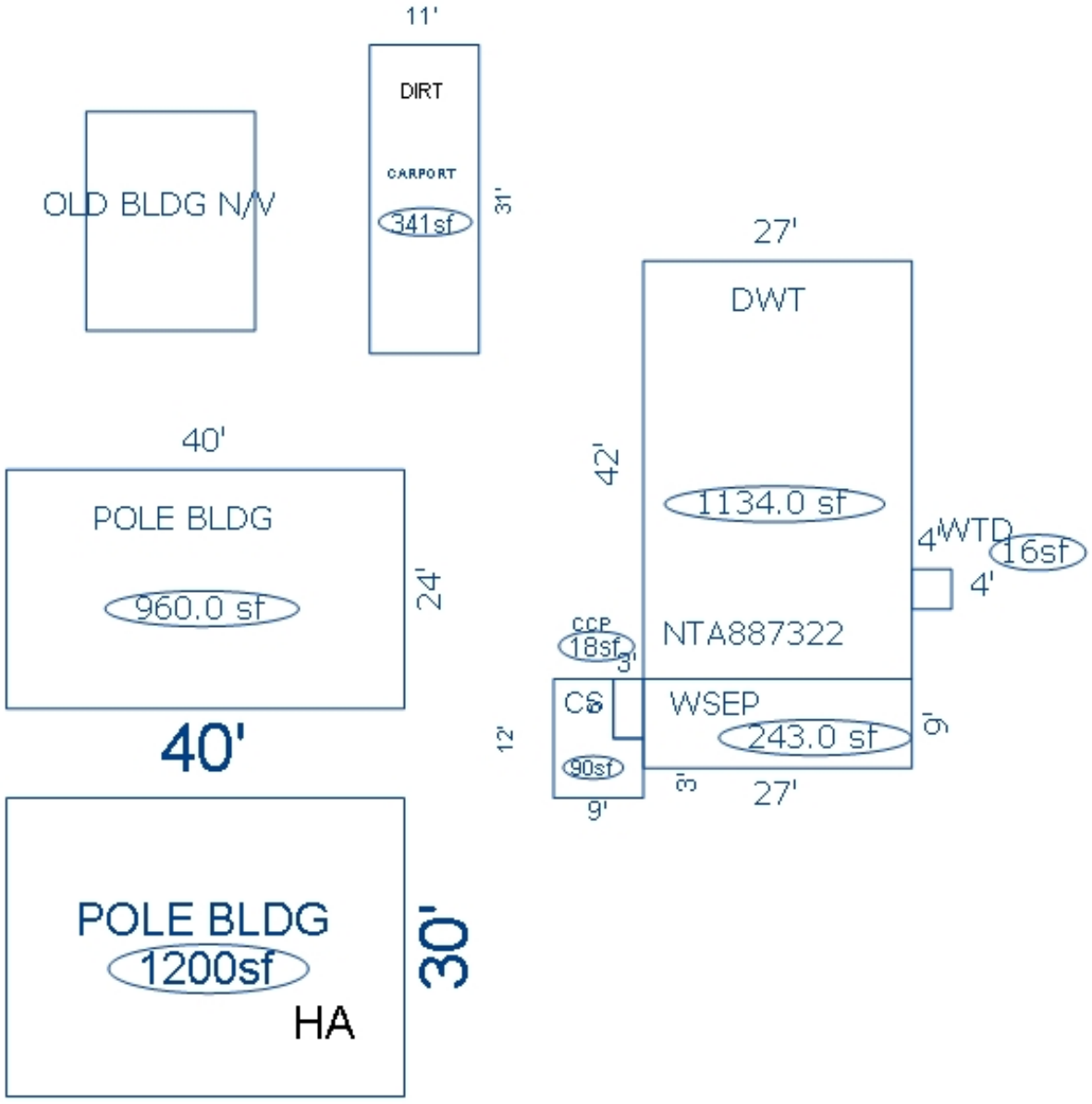

*** Information herein deemed reliable but not guaranteed***

Parcel Number: 2410-15-3102 Jurisdiction: GREENWOOD TWP County: WEXFORD Printed on 02/15/2024

Grantor	Grantee	Sale Price	Sale Date	Inst. Type	Terms of Sale	Liber & Page	Verified By	Prcnt. Trans.
OBERMEIER, GEOFFERY M & RA	KOMISARZ, STANLEY & KAREN	177,000	04/25/2017	WD	03-ARM'S LENGTH	6803/603	DEED	100.0
CLEVELAND, RICHARD E MARLE	OBERMEIER, GEOFFERY M & RA	147,500	04/27/2012	WD	03-ARM'S LENGTH	647/2724	DEED	100.0

Property Address

9436 N 31 RD

Owner's Name/Address

KOMISARZ, STANLEY & KAREN
9436 N 31 RD
MANTON MI 49663

Tax Description

N 1/2 OF N 1/2 OF SW 1/4 --40 A M/L-- GW SEC 15 T24N R10W -MANTON- [[ASSESSED W/ 15-3101 '00

Comments/Influences

Class: RESIDENTIAL-IMPROV Zoning:

School: MANTON CONSOLIDATED SCHOOLS

P.R.E. 100% 05/16/2017

:

2024 Est TCV 359,540 TCV/TFA: 230.47

Building Permit(s)	Date	Number	Status
Pole Barn	12/21/2017	PB17-0205	COMPLETE
MOBILE HOME	09/25/2001	PM5280	
RESIDENTIAL - REMODEL	09/25/2001	PM5288	
MOBILE HOME	09/25/2001	PP2359	

X Improved | Vacant

Public Improvements

- Dirt Road
- Gravel Road
- X Paved Road
- Storm Sewer
- Sidewalk
- Water
- Sewer
- X Electric
- Gas
- Curb
- Street Lights
- Standard Utilities
- Underground Utils.

Topography of Site

- X Level
- X Rolling
- Low
- High
- Landscaped
- Swamp
- X Wooded
- Pond
- Waterfront
- Ravine
- Wetland
- Flood Plain
- X OPEN/PINES

Who	When	What
GLA	05/13/2021	INSPECTION
GLA	08/01/2014	SALES INSP
GLA	05/03/2016	INSPECTION

Land Value Estimates for Land Table 4010.LAND VALUES

Description	Frontage	Depth	* Factors * Front	Depth	Rate	%Adj.	Reason	Value
ACREAGE			39.500 Acres		2,722	100		107,519
ROW			0.500 Acres		0	100		0
			40.00 Total Acres		Total Est. Land Value =			107,519

Land Improvement Cost Estimates

Description	Rate	Size	% Good	Cash Value
Gazeboo(s): Standard	8,744.77	1	35	3,061
D/W/P: Asphalt Paving	3.12	1800	60	3,370
D/W/P: 3.5 Concrete	6.63	430	65	1,853

Residential Local Cost Land Improvements

Description	Rate	Size	% Good	Cash Value
POND PER ACRE	1,000.00	1	83	830
Total Estimated Land Improvements True Cash Value =				9,114

Year	Land Value	Building Value	Assessed Value	Board of Review	Tribunal/ Other	Taxable Value
2024	53,800	126,000	179,800			104,953C
2023	47,500	103,800	151,300	0M		0
2022	37,700	88,300	126,000	0M		0
2021	33,700	89,400	123,100	0M		0

The Equalizer. Copyright (c) 1999 - 2009.
Licensed To: Township of Greenwood, County of Wexford, Michigan

*** Information herein deemed reliable but not guaranteed***

Building Type

X	Single Family
	Mobile Home
	Town Home
	Duplex
	A-Frame
X	Wood Frame

Building Style: RANCH

Yr Built	Remodeled
2001	0

Condition: Average

Room List

	Basement
	1st Floor
	2nd Floor
	Bedrooms

(1) Exterior

	Wood/Shingle
	Aluminum/Vinyl
	Brick
X	Vinyl
	Insulation

(2) Windows

X	Many		Large
	Avg.	X	Avg.
	Few		Small

	Wood Sash
	Metal Sash
X	Vinyl Sash
X	Double Hung
	Horiz. Slide
	Casement
	Double Glass
X	Patio Doors
X	Storms & Screens

(3) Roof

X	Gable		Gambrel
	Hip		Mansard
	Flat		Shed

X	Asphalt Shingle

Chimney:

(3) Roof (cont.)

	Eavestrough
	Insulation
0	Front Overhang
0	Other Overhang

(4) Interior

	Drywall		Plaster
	Paneled		Wood T&G

Trim & Decoration

	Ex		Ord		Min

Size of Closets

	Lg		Ord		Small

Doors:		Solid		H.C.

(5) Floors

Kitchen:
Other:
Other:

(6) Ceilings

(7) Excavation

Basement: 0 S.F.
Crawl: 1560 S.F.
Slab: 0 S.F.
Height to Joists: 0.0

(8) Basement

	Conc. Block
	Poured Conc.
	Stone
	Treated Wood
	Concrete Floor

(9) Basement Finish

	Recreation SF
	Living SF
	Walkout Doors (B)
	No Floor SF
	Walkout Doors (A)

(10) Floor Support

Joists:
Unsupported Len:
Cntr.Sup:

(11) Heating/Cooling

X	Gas		Oil		Elec.
	Wood		Coal		Steam

	Forced Air w/o Ducts
	Forced Air w/ Ducts
X	Forced Hot Water
	Electric Baseboard
	Elec. Ceil. Radiant
	Radiant (in-floor)
	Electric Wall Heat
	Space Heater
	Wall/Floor Furnace
	Forced Heat & Cool
	Heat Pump
	No Heating/Cooling

X	Central Air
	Wood Furnace

(12) Electric

0	Amps Service

No./Qual. of Fixtures

	Ex.		Ord.		Min

No. of Elec. Outlets

	Many		Ave.		Few

(13) Plumbing

1	Average Fixture(s)
	3 Fixture Bath
	2 Fixture Bath
	Softener, Auto
	Softener, Manual
	Solar Water Heat
	No Plumbing
	Extra Toilet
	Extra Sink
	Separate Shower
	Ceramic Tile Floor
	Ceramic Tile Wains
	Ceramic Tub Alcove
	Vent Fan

(14) Water/Sewer

	Public Water
	Public Sewer
1	Water Well
1	1000 Gal Septic
	2000 Gal Septic

Lump Sum Items:

(15) Built-ins

	Appliance Allow.
	Cook Top
	Dishwasher
	Garbage Disposal
	Bath Heater
	Vent Fan
	Hot Tub
	Unvented Hood
	Vented Hood
	Intercom
	Jacuzzi Tub
	Jacuzzi repl.Tub
	Oven
	Microwave
	Standard Range
	Self Clean Range
	Sauna
	Trash Compactor
	Central Vacuum
	Security System

(15) Fireplaces

	Interior 1 Story
	Interior 2 Story
	2nd/Same Stack
	Two Sided
	Exterior 1 Story
	Exterior 2 Story
	Prefab 1 Story
	Prefab 2 Story
	Heat Circulator
	Raised Hearth
	Wood Stove
	Direct-Vented Gas

Class: C
Effec. Age: 42
Floor Area: 1,560
Total Base New : 303,395 E.C.F.
Total Depr Cost: 187,284 X 1.297
Estimated T.C.V: 242,907

(16) Porches/Decks

Area	Type
240	WSEP (1 Story)
80	CCP (1 Story)
120	Treated Wood

(17) Garage

Year Built:
Car Capacity:
Class: C
Exterior: Siding
Brick Ven.: 0
Stone Ven.: 0
Common Wall: 1 Wall
Foundation: 42 Inch
Finished ?:
Auto. Doors: 0
Mech. Doors: 0
Area: 528
% Good: 0
Storage Area: 0
No Conc. Floor: 0

Bsmnt Garage:

Carport Area:
Roof:

Cost Est. for Res. Bldg: 1 Single Family RANCH Cls C Blt 2001
(11) Heating System: Forced Hot Water, Air Conditioning
Ground Area = 1560 SF Floor Area = 1560 SF.
Phy/Ab.Phy/Func/Econ/Comb. % Good=58/100/100/100/58
Building Areas

Stories	Exterior	Foundation	Size	Cost New	Depr. Cost	
1 Story	Siding	Crawl Space	1,560			
			Total:	218,607	126,792	
Other Additions/Adjustments						
Water/Sewer						
1000 Gal Septic			1	4,899	2,841	
Water Well, 100 Feet			1	5,849	3,392	
Porches						
WSEP (1 Story)			240	11,767	6,825	
CCP (1 Story)			80	2,322	1,347	
Deck						
Treated Wood			120	2,968	1,721	
Garages						
Class: C Exterior: Siding Foundation: 42 Inch (Unfinished)						
Base Cost			528	23,565	13,668	
Common Wall: 1 Wall			1	-2,705	-1,569	
Class: CD Exterior: Pole (Unfinished)						
Base Cost			1408	30,624	29,093	*9
Local Cost Items						
SHED			64	499	274	*5
OUTSIDE FURNACE			1	5,000	2,900	
			Totals:	303,395	187,284	

Notes:
ECF (RESIDENTIAL) 1.297 => TCV: 242,907

*** Information herein deemed reliable but not guaranteed***

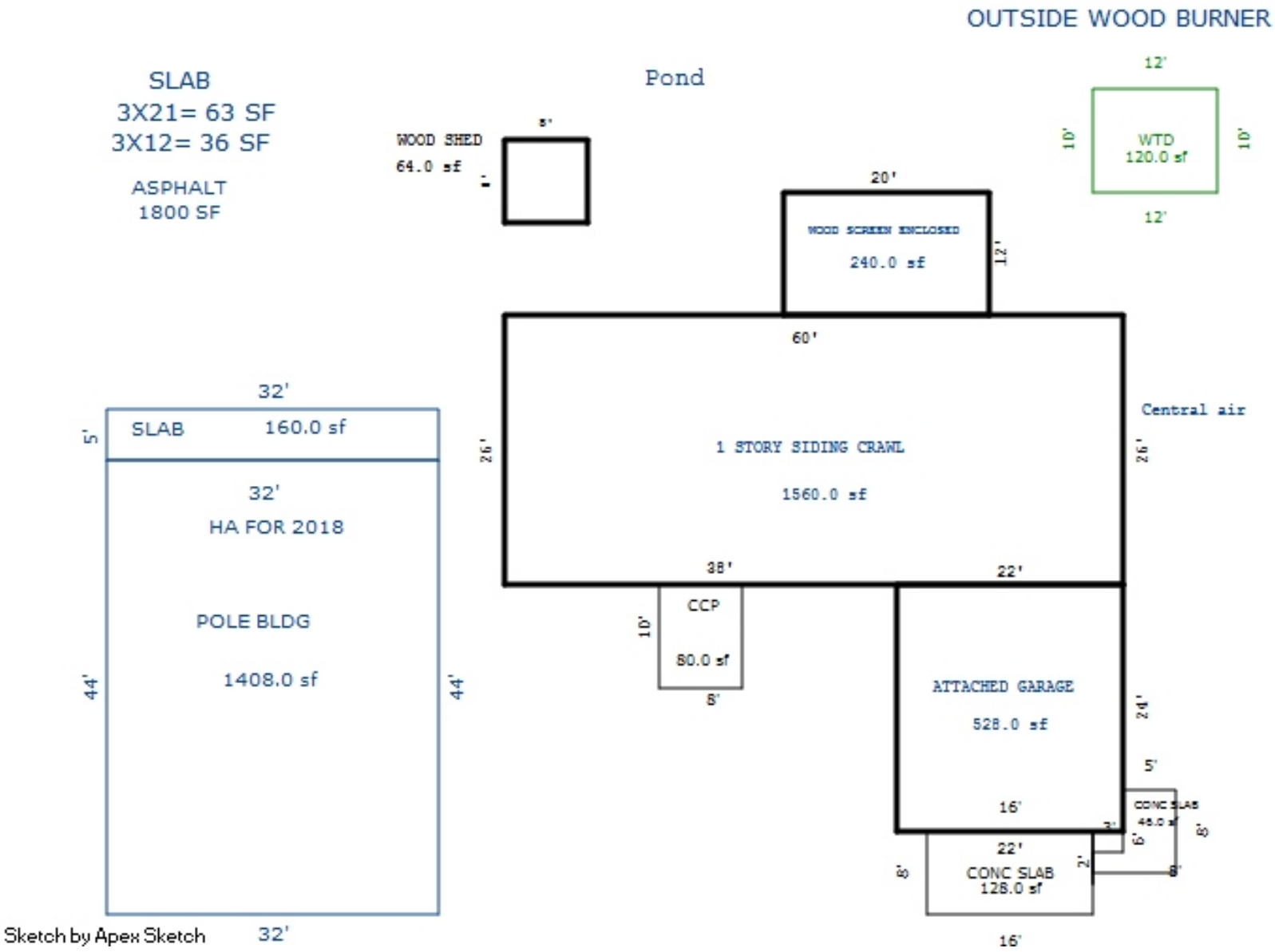

*** Information herein deemed reliable but not guaranteed***

Parcel Number: 2410-15-3301 Jurisdiction: GREENWOOD TWP County: WEXFORD Printed on 02/15/2024

Grantor	Grantee	Sale Price	Sale Date	Inst. Type	Terms of Sale	Liber & Page	Verified By	Prcnt. Trans.

Property Address

Owner's Name/Address

STATE OF MICHIGAN
P O BOX 30735
GRANTS ADMINISTRATION
LANSING MI 48909-8235

Tax Description

S 1/2 OF SW 1/4 EXC W 33 FT. OF S 213 FT. GW. SEC. 15 T24N R10W - MANTON 80 A. M/L

Comments/Influences

The Equalizer. Copyright (c) 1999 - 2009. Licensed To: Township of Greenwood, County of Wexford, Michigan

Class: AGRICULTURAL-VACAN Zoning:

School: MANTON CONSOLIDATED SCHOOLS

P.R.E. 0%

:

2024 Est TCV 0

Building Permit(s)	Date	Number	Status

	Improved	X	Vacant

	Public Improvements
	Dirt Road
	Gravel Road
X	Paved Road
	Storm Sewer
	Sidewalk
	Water
	Sewer
X	Electric
	Gas
	Curb
	Street Lights
	Standard Utilities
	Underground Utils.

	Topography of Site
X	Level
X	Rolling
	Low
X	High
	Landscaped
	Swamp
X	Wooded
	Pond
	Waterfront
	Ravine
	Wetland
	Flood Plain
X	OPEN

Who	When	What
GLA	05/03/2016	INSPECTION

Land Value Estimates for Land Table 4010.LAND VALUES

Description	Frontage	Depth	* Factors * Front	Depth	Rate	%Adj.	Reason	Value
ACREAGE			77.500 Acres		2,550	100		197,645
			2.500 Acres		0	100		0
			80.00 Total Acres		Total Est. Land Value =			197,645

Year	Land Value	Building Value	Assessed Value	Board of Review	Tribunal/ Other	Taxable Value
2024	EXEMPT	EXEMPT	EXEMPT			EXEMPT
2023	EXEMPT	EXEMPT	EXEMPT			EXEMPT
2022	0	0	0			0
2021	0	0	0			0

*** Information herein deemed reliable but not guaranteed***

Parcel Number: 2410-15-3302 Jurisdiction: GREENWOOD TWP County: WEXFORD Printed on 02/15/2024

Grantor	Grantee	Sale Price	Sale Date	Inst. Type	Terms of Sale	Liber & Page	Verified By	Prcnt. Trans.
FEDERAL NATIONAL MORTGAGE	WEXFORD CO ROAD COMMISSION	0	08/28/2008	WD	17-LENDING TO LENDING	614/1610	DEED	100.0
HUNTINGTON NATIONAL BANK	FEDERAL NATIONAL MORTGAGE	0	08/15/2007	QC	17-LENDING TO LENDING	604/65	DEED	0.0
WEHR, M. BRUCE & SARA	HUNTINGTON NATIONAL BANK	71,513	07/27/2007	SD	21-NOT USED/OTHER	603/398	DEED	0.0

Property Address

Class: COMMERCIAL-VACANT Zoning:

School: MANTON CONSOLIDATED SCHOOLS

P.R.E. 100% / /

:

2024 Est TCV 0

Building Permit(s)	Date	Number	Status

Owner's Name/Address

WEXFORD CO ROAD COMMISSION
85 E M-115 HWY
CADILLAC MI 49601

[ ] Improved [X] Vacant

Land Value Estimates for Land Table 4010.LAND VALUES

Description	Frontage	Depth	* Factors * Front	Depth	Rate	%Adj.	Reason	Value
ACREAGE			0.140 Acres		10,953	100		1,533
			0.020 Acres		0	100		0
			0.16 Total Acres		Total Est. Land Value =			1,533

Tax Description

W 33 FT OF S 213 FT OF SW 1/4 OF SW 1/4 --.16 A M/L-- GW. SEC. 15 T24N R10W - MANTON

Comments/Influences

Public Improvements

	Dirt Road
	Gravel Road
X	Paved Road
	Storm Sewer
	Sidewalk
	Water
	Sewer
X	Electric
	Gas
	Curb
	Street Lights
	Standard Utilities
	Underground Utils.

Topography of Site

X	Level
X	Rolling
	Low
X	High
	Landscaped
	Swamp
X	Wooded
	Pond
	Waterfront
	Ravine
	Wetland
	Flood Plain
X	OPEN

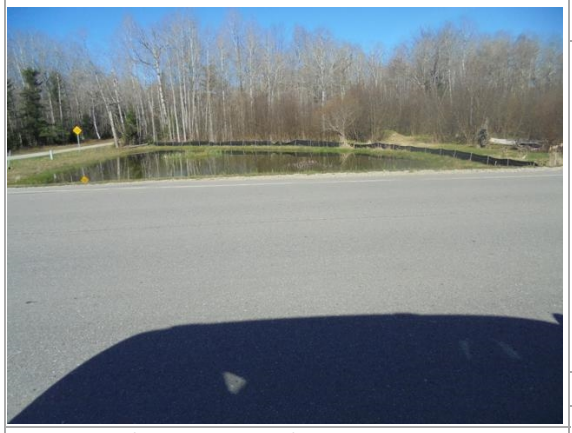

Who	When	What
GLA	05/03/2016	INSPECTION

Year	Land Value	Building Value	Assessed Value	Board of Review	Tribunal/ Other	Taxable Value
2024	EXEMPT	EXEMPT	EXEMPT			EXEMPT
2023	EXEMPT	EXEMPT	EXEMPT			EXEMPT
2022	0	0	0			0
2021	0	0	0			0

The Equalizer. Copyright (c) 1999 - 2009.
Licensed To: Township of Greenwood, County of Wexford, Michigan

*** Information herein deemed reliable but not guaranteed***

Parcel Number: 2410-15-4101 Jurisdiction: GREENWOOD TWP County: WEXFORD Printed on 02/15/2024

Grantor	Grantee	Sale Price	Sale Date	Inst. Type	Terms of Sale	Liber & Page	Verified By	Prcnt. Trans.

Property Address	Class: RESIDENTIAL-VACANT	Zoning:	Building Permit(s)	Date	Number	Status
	School: MANTON CONSOLIDATED SCHOOLS					
Owner's Name/Address	P.R.E. 0%					
	:					
SWINEHART, ROGER F. 11018 LONG POINT PLAINWELL MI 49080	2024 Est TCV 24,907					

	Improved	X	Vacant

	Public Improvements
	Dirt Road
	Gravel Road
X	Paved Road
	Storm Sewer
	Sidewalk
	Water
	Sewer
X	Electric
	Gas
	Curb
	Street Lights
	Standard Utilities
	Underground Utils.

	Topography of Site
X	Level
X	Rolling
	Low
	High
	Landscaped
	Swamp
X	Wooded
	Pond
	Waterfront
	Ravine
	Wetland
	Flood Plain
X	OPEN

Who	When	What
GLA	05/03/2016	INSPECTION

Tax Description

N 10 RDS OF E 1/2 OF SE 1/4 GW. SEC. 15 T24N R10W - MANTON 5 A.

Comments/Influences

Land Value Estimates for Land Table 4010.LAND VALUES

Description	Frontage	Depth	* Factors * Front	Depth	Rate	%Adj.	Reason	Value
ACREAGE			4.880 Acres		5,104	100		24,907
ROW			0.120 Acres		0	100		0
			5.00 Total Acres		Total Est. Land Value =			24,907

Year	Land Value	Building Value	Assessed Value	Board of Review	Tribunal/ Other	Taxable Value
2024	12,500	0	12,500			3,591C
2023	10,600	0	10,600			3,420C
2022	7,400	0	7,400			3,258C
2021	8,500	0	8,500			3,154C

The Equalizer. Copyright (c) 1999 - 2009. Licensed To: Township of Greenwood, County of Wexford, Michigan

*** Information herein deemed reliable but not guaranteed***

Parcel Number: 2410-15-4102 Jurisdiction: GREENWOOD TWP County: WEXFORD Printed on 02/15/2024

Grantor	Grantee	Sale Price	Sale Date	Inst. Type	Terms of Sale	Liber & Page	Verified By	Prcnt. Trans.

Property Address	Class: RESIDENTIAL-IMPROV	Zoning:	Building Permit(s)	Date	Number	Status
9401 N 33 RD	School: MANTON CONSOLIDATED SCHOOLS		RESIDENTIAL - REMODEL	09/06/2005	PE17079	
	P.R.E. 0%		RESIDENTIAL - NEW	11/03/2003	PM7190	
Owner's Name/Address	:					
SWINEHART, LINDA R. 11018 LONG POINT PLAINWELL MI 49080	2024 Est TCV 109,459 TCV/TFA: 118.33					

X Improved | Vacant

Tax Description

S 20 RDS OF N 30 RDS OF E 1/2 OF SE 1/4 GW. SEC. 15 T24N R10W - MANTON 10 A.

Comments/Influences

Default Comments

The Equalizer. Copyright (c) 1999 - 2009. Licensed To: Township of Greenwood, County of Wexford, Michigan

	Public Improvements
	Dirt Road
	Gravel Road
X	Paved Road
	Storm Sewer
	Sidewalk
	Water
	Sewer
X	Electric
	Gas
	Curb
	Street Lights
	Standard Utilities
	Underground Utils.

	Topography of Site
X	Level
X	Rolling
X	Low
X	High
	Landscaped
	Swamp
X	Wooded
	Pond
	Waterfront
	Ravine
	Wetland
	Flood Plain
X	OPEN

Who	When	What
GLA	05/13/2021	INSPECTION
LM	10/21/2010	INSPECTED

Land Value Estimates for Land Table 4010.LAND VALUES

Description	Frontage	Depth	* Factors * Front	Depth	Rate	%Adj.	Reason	Value
ACREAGE			9.750 Acres		4,664	100		45,470
ROW			0.250 Acres		0	100		0
			10.00 Total Acres		Total Est. Land Value =			45,470

Land Improvement Cost Estimates

Description	Rate	Size	% Good	Cash Value
D/W/P: 3.5 Concrete	5.86	49	68	195
Total Estimated Land Improvements True Cash Value =				195

Year	Land Value	Building Value	Assessed Value	Board of Review	Tribunal/ Other	Taxable Value
2024	22,700	32,000	54,700			14,674C
2023	12,900	25,600	38,500			13,976C
2022	11,900	21,500	33,400			13,311C
2021	12,000	21,600	33,600			12,886C

*** Information herein deemed reliable but not guaranteed***

Building Type

X	Single Family
	Mobile Home
	Town Home
	Duplex
	A-Frame
X	Wood Frame

Building Style: CABIN

Yr Built	Remodeled
0	0

Condition: Fair

Room List

	Basement
	1st Floor
	2nd Floor
	Bedrooms

(1) Exterior

	Wood/Shingle
	Aluminum/Vinyl
	Brick
X	Block
	Insulation

(2) Windows

X	Many Avg. Few	X	Large Avg. Small

X	Wood Sash
	Metal Sash
	Vinyl Sash
X	Double Hung
X	Horiz. Slide
	Casement
	Double Glass
	Patio Doors
	Storms & Screens

(3) Roof

X	Gable		Gambrel
	Hip		Mansard
	Flat		Shed

X	Asphalt Shingle

Chimney: Block

(3) Roof (cont.)

	Eavestrough
	Insulation
0	Front Overhang
0	Other Overhang

(4) Interior

	Drywall Paneled		Plaster Wood T&G

Trim & Decoration

	Ex		Ord		Min

Size of Closets

	Lg		Ord		Small

Doors: | | Solid | | H.C.

(5) Floors

Kitchen: Linoleum
Other: Carpeted
Other:

(6) Ceilings

(7) Excavation

Basement: 0 S.F.
Crawl: 0 S.F.
Slab: 925 S.F.
Height to Joists: 0.0

(8) Basement

	Conc. Block
	Poured Conc.
	Stone
	Treated Wood
	Concrete Floor

(9) Basement Finish

	Recreation SF
	Living SF
	Walkout Doors (B)
	No Floor SF
	Walkout Doors (A)

(10) Floor Support

Joists:
Unsupported Len:
Cntr.Sup:

(11) Heating/Cooling

X	Gas		Oil		Elec.
	Wood		Coal		Steam

	Forced Air w/o Ducts
X	Forced Air w/ Ducts
	Forced Hot Water
	Electric Baseboard
	Elec. Ceil. Radiant
	Radiant (in-floor)
	Electric Wall Heat
	Space Heater
	Wall/Floor Furnace
	Forced Heat & Cool
	Heat Pump
	No Heating/Cooling

	Central Air
	Wood Furnace

(12) Electric

0	Amps Service

No./Qual. of Fixtures

	Ex.		Ord.		Min

No. of Elec. Outlets

	Many		Ave.		Few

(13) Plumbing

1	Average Fixture(s)
	3 Fixture Bath
	2 Fixture Bath
	Softener, Auto
	Softener, Manual
	Solar Water Heat
	No Plumbing
	Extra Toilet
	Extra Sink
	Separate Shower
	Ceramic Tile Floor
	Ceramic Tile Wains
	Ceramic Tub Alcove
	Vent Fan

(14) Water/Sewer

	Public Water
	Public Sewer
1	Water Well
1	1000 Gal Septic
	2000 Gal Septic

Lump Sum Items:

(15) Built-ins

	Appliance Allow.
	Cook Top
	Dishwasher
	Garbage Disposal
	Bath Heater
	Vent Fan
	Hot Tub
	Unvented Hood
	Vented Hood
	Intercom
	Jacuzzi Tub
	Jacuzzi repl.Tub
	Oven
	Microwave
	Standard Range
	Self Clean Range
	Sauna
	Trash Compactor
	Central Vacuum
	Security System

(15) Fireplaces

	Interior 1 Story
	Interior 2 Story
	2nd/Same Stack
	Two Sided
	Exterior 1 Story
	Exterior 2 Story
	Prefab 1 Story
	Prefab 2 Story
	Heat Circulator
	Raised Hearth
	Wood Stove
	Direct-Vented Gas

Class: D
Effec. Age: 68
Floor Area: 925
Total Base New : 109,303 E.C.F.
Total Depr Cost: 49,186 X 1.297
Estimated T.C.V: 63,794

(16) Porches/Decks

Area	Type

(17) Garage

Year Built:
Car Capacity:
Class:
Exterior:
Brick Ven.:
Stone Ven.:
Common Wall:
Foundation:
Finished ?:
Auto. Doors:
Mech. Doors:
Area:
% Good:
Storage Area:
No Conc. Floor:

Bsmnt Garage:

Carport Area:
Roof:

Cost Est. for Res. Bldg: 1 Single Family CABIN Cls D Blt 0
(11) Heating System: Forced Air w/ Ducts
Ground Area = 925 SF Floor Area = 925 SF.
Phy/Ab.Phy/Func/Econ/Comb. % Good=45/100/100/100/45
Building Areas

Stories	Exterior	Foundation	Size	Cost New	Depr. Cost
1 Story	Block	Slab	925		
			Total:	99,519	44,783
Other Additions/Adjustments					
Water/Sewer					
1000 Gal Septic			1	4,200	1,890
Water Well, 100 Feet			1	5,584	2,513
			Totals:	109,303	49,186

Notes:
ECF (RESIDENTIAL) 1.297 => TCV: 63,794

*** Information herein deemed reliable but not guaranteed***

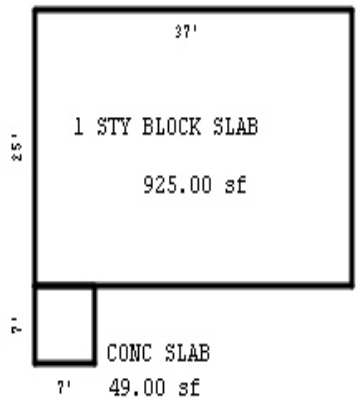

Sketch by Apex Medina™

*** Information herein deemed reliable but not guaranteed***

Parcel Number: 2410-15-4103 Jurisdiction: GREENWOOD TWP County: WEXFORD Printed on 02/15/2024

Grantor	Grantee	Sale Price	Sale Date	Inst. Type	Terms of Sale	Liber & Page	Verified By	Prcnt. Trans.

Property Address

Owner's Name/Address

RAHIM, JAMES A.
& LINDA M.
4841 FOX HILL
STERLING HEIGHTS MI 48310-3377

Tax Description

S 230 FT OF N 725 FT OF E 1/2 OF SE 1/4 --7.12 A M/L-- GW. SEC. 15 T24N R10W - MANTON

Comments/Influences

The Equalizer. Copyright (c) 1999 - 2009. Licensed To: Township of Greenwood, County of Wexford, Michigan

Class: RESIDENTIAL-VACANT Zoning:

School: MANTON CONSOLIDATED SCHOOLS

P.R.E. 0%

:

2024 Est TCV 35,119

Building Permit(s)	Date	Number	Status

	Improved	X	Vacant

	Public Improvements
X	Dirt Road
	Gravel Road
	Paved Road
	Storm Sewer
	Sidewalk
	Water
	Sewer
X	Electric
	Gas
	Curb
	Street Lights
	Standard Utilities
	Underground Utils.

	Topography of Site
X	Level
X	Rolling
	Low
X	High
	Landscaped
	Swamp
X	Wooded
	Pond
	Waterfront
	Ravine
	Wetland
	Flood Plain
X	OPEN/PINES

Who	When	What
GLA	05/03/2016	INSPECTION

Land Value Estimates for Land Table 4010.LAND VALUES

Description	Frontage	Depth	* Factors * Front	Depth	Rate	%Adj.	Reason	Value
ACREAGE			6.870 Acres		5,112	100		35,119
ROW			0.250 Acres		0	100		0
			7.12 Total Acres		Total Est. Land Value =			35,119

Year	Land Value	Building Value	Assessed Value	Board of Review	Tribunal/ Other	Taxable Value
2024	17,600	0	17,600			4,538C
2023	11,800	0	11,800			4,322C
2022	10,300	0	10,300			4,117C
2021	11,700	0	11,700			3,986C

*** Information herein deemed reliable but not guaranteed***

Parcel Number: 2410-15-4104 Jurisdiction: GREENWOOD TWP County: WEXFORD Printed on 02/15/2024

Grantor	Grantee	Sale Price	Sale Date	Inst. Type	Terms of Sale	Liber & Page	Verified By	Prcnt. Trans.
HOSKINS, KEITH & SARI	RIOUX, MICHAEL A & CELIA A	6,100	12/15/2016	QC	03-ARM'S LENGTH	6791/1111	DEED	100.0
WEXFORD COUNTY TREASURES	HOSKINS, KEITH & SARI	6,100	09/15/2016	QC	11-FROM LENDING INSTITUTI	6781/338	DEED	100.0
FOUR SEASONS SPORTSMAN	WEXFORD COUNTY TREASURES	0	03/30/2016	OTH	21-NOT USED/OTHER	676-/2382	DEED	0.0

Property Address

Class: RESIDENTIAL-VACANT Zoning:

School: MANTON CONSOLIDATED SCHOOLS

P.R.E. 0%

:

2024 Est TCV 29,036

Building Permit(s)	Date	Number	Status

Owner's Name/Address

RIOUX, MICHAEL A & CELIA ANN
1350 KANTZ RD
TRAVERSE CITY MI 49696

	Improved	X	Vacant

Land Value Estimates for Land Table 4010.LAND VALUES

Description	Frontage	Depth	* Factors * Front	Depth	Rate	%Adj.	Reason	Value
ACREAGE			5.680 Acres		5,112	100		29,036
ROW			0.250 Acres		0	100		0
			5.93 Total Acres		Total Est. Land Value =			29,036

Tax Description

PAR COM 1714.82 FT N OF SE COR OF SEC: W TO 1/8 LINE; N 200 FT; E TO R/W OF 33 RD; S TO BEG. --5.93 A M/L-- GW. SEC. 15 T24N R10W - MANTON

Comments/Influences

	Public Improvements
	Dirt Road
X	Gravel Road
	Paved Road
	Storm Sewer
	Sidewalk
	Water
	Sewer
X	Electric
	Gas
	Curb
	Street Lights
	Standard Utilities
	Underground Utils.

	Topography of Site
X	Level
X	Rolling
	Low
X	High
	Landscaped
	Swamp
X	Wooded
	Pond
	Waterfront
	Ravine
	Wetland
	Flood Plain
X	OPEN/PINES

Who	When	What
GLA	05/03/2016	INSPECTION

Year	Land Value	Building Value	Assessed Value	Board of Review	Tribunal/ Other	Taxable Value
2024	14,500	0	14,500			9,177C
2023	11,100	0	11,100			8,740C
2022	8,500	0	8,500			8,324C
2021	9,700	0	9,700			8,059C

The Equalizer. Copyright (c) 1999 - 2009.
Licensed To: Township of Greenwood, County of Wexford, Michigan

*** Information herein deemed reliable but not guaranteed***

Parcel Number: 2410-15-4105 Jurisdiction: GREENWOOD TWP County: WEXFORD Printed on 02/15/2024

Grantor	Grantee	Sale Price	Sale Date	Inst. Type	Terms of Sale	Liber & Page	Verified By	Prcnt. Trans.
ITONEY, GEORGE T.	SMITH KEVIN M	61,000	10/11/2023	WD	03-ARM'S LENGTH	696/771	PROPERTY TRANSFER	100.0
ITONEY, GEORGE T.	ITONEY, GEORGE & JULIA	1	06/28/2002	QC	09-FAMILY	389:504	DEED	0.0
LOWERY, LLOYD & HELEN	CARPENTER, ROGER & CAROL	25,000	10/19/1996	LC	03-ARM'S LENGTH	351:897	DEED	0.0

Property Address

Class: RESIDENTIAL-VACANT Zoning:

School: MANTON CONSOLIDATED SCHOOLS

P.R.E. 0%

:

2024 Est TCV 20,392

Building Permit(s)	Date	Number	Status

Owner's Name/Address

SMITH KEVIN M
5100 HEGEL RD
GOODRICH MI 48438

	Improved	X	Vacant

Land Value Estimates for Land Table 4010.LAND VALUES

Description	Frontage	Depth	* Factors * Front	Depth	Rate	%Adj.	Reason	Value
HELSEL RIV LOW	198.00	946.00	1.0000	0.0000	315	100*		0
ACREAGE			4.050 Acres		5,035	100		20,392
ROW			0.250 Acres		0	100		0

* denotes lines that do not contribute to the total acreage calculation.

198 Actual Front Feet, 4.30 Total Acres Total Est. Land Value = 20,392

Tax Description

PAR "A" DESC AS COM AT SE COR OF SEC; N 670.56 FT TO POB: S87D55'47"W 534.72 FT; S10D32'53"E 136.25 FT; S79D31'40"W 26.05 FT; S 11D 04'25"W 185.13 FT; W 54.56 FT TO PT ON SHORE OF SILVER CREEK; ALG TRAVERSE LN N29D39'39"W 315.35 FT; N46D45'03"E 357.58 FT; N87D55'47"E 527.38 FT; S 198.43 FT TO POB. --4.3 A M/L-- GW. SEC. 15 T24N R10W -MANTON-

Comments/Influences

	Public Improvements
	Dirt Road
X	Gravel Road
	Paved Road
	Storm Sewer
	Sidewalk
	Water
	Sewer
X	Electric
	Gas
	Curb
	Street Lights
	Standard Utilities
	Underground Utils.

	Topography of Site
X	Level
X	Rolling
X	Low
X	High
	Landscaped
	Swamp
X	Wooded
	Pond
	Waterfront
	Ravine
	Wetland
	Flood Plain
X	OPEN

Who	When	What
GLA	10/31/2022	INSPECTION
LM	10/28/2011	APPR INSPE
GLA	05/03/2016	INSPECTION

Year	Land Value	Building Value	Assessed Value	Board of Review	Tribunal/ Other	Taxable Value
2024	10,200	0	10,200			10,200S
2023	9,500	0	9,500			5,054C
2022	7,000	0	7,000			4,814C
2021	8,400	0	8,400			4,661C

The Equalizer. Copyright (c) 1999 - 2009.
Licensed To: Township of Greenwood, County of Wexford, Michigan

*** Information herein deemed reliable but not guaranteed***

Parcel Number: 2410-15-4106 Jurisdiction: GREENWOOD TWP County: WEXFORD Printed on 02/15/2024

Grantor	Grantee	Sale Price	Sale Date	Inst. Type	Terms of Sale	Liber & Page	Verified By	Prcnt. Trans.
ITONEY, GEORGE T.	SMITH KEVIN M	61,000	10/11/2023	WD	03-ARM'S LENGTH	696/771	PROPERTY TRANSFER	100.0

Property Address

Owner's Name/Address

SMITH KEVIN M
5100 HEGEL RD
GOODRICH MI 48438

Tax Description

PAR "B" DESC AS COM AT SE COR OF SEC; N 868.99 FT TO POB: S87D55'47"W 527.38 FT; S46D45'03"W 357.58 FT TO PT ON SILVER CREEK; ALG TRAVERSE LN N29D39'39"W 36.2 FT; W 167.23 FT; N38D22'59"E 344.85 FT; N43D51'49"E 189.95 FT; N87D57'20"E 633.57 FT; S 198.43 FT TO POB. --4.4 A M/L-- TOG W/ & SUB TO EASMT GW. SEC. 15 T24N R10W -MANTON-

Comments/Influences

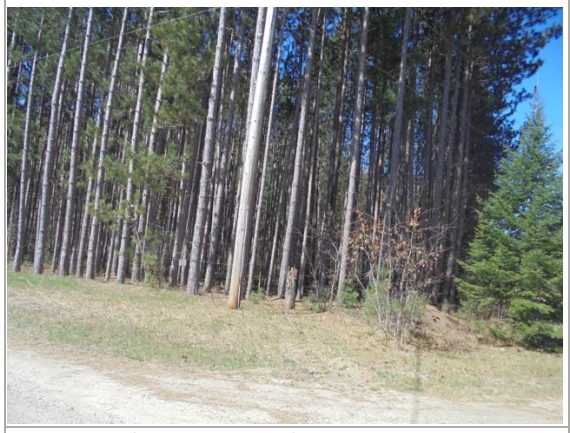

Class: RESIDENTIAL-VACANT Zoning:

School: MANTON CONSOLIDATED SCHOOLS

P.R.E. 0%

:

2024 Est TCV 20,936

Building Permit(s)	Date	Number	Status

	Improved	X	Vacant

	Public Improvements
X	Dirt Road
X	Gravel Road
	Paved Road
	Storm Sewer
	Sidewalk
	Water
	Sewer
X	Electric
	Gas
	Curb
	Street Lights
	Standard Utilities
	Underground Utils.

	Topography of Site
X	Level
X	Rolling
	Low
X	High
	Landscaped
	Swamp
	Wooded
	Pond
	Waterfront
	Ravine
	Wetland
	Flood Plain
X	OPEN/PINES

Who	When	What
GLA	05/03/2016	INSPECTION

Land Value Estimates for Land Table 4010.LAND VALUES

Description	Frontage	Depth	* Factors * Front	Depth	Rate	%Adj.	Reason	Value
ACREAGE			4.150 Acres		5,045	100		20,936
ROW			0.250 Acres		0	100		0
			4.40 Total Acres		Total Est. Land Value =			20,936

Year	Land Value	Building Value	Assessed Value	Board of Review	Tribunal/ Other	Taxable Value
2024	10,500	0	10,500			10,500S
2023	9,600	0	9,600			5,054C
2022	7,100	0	7,100			4,814C
2021	8,400	0	8,400			4,661C

The Equalizer. Copyright (c) 1999 - 2009. Licensed To: Township of Greenwood, County of Wexford, Michigan

*** Information herein deemed reliable but not guaranteed***

Parcel Number: 2410-15-4108 Jurisdiction: GREENWOOD TWP County: WEXFORD Printed on 02/15/2024

Grantor	Grantee	Sale Price	Sale Date	Inst. Type	Terms of Sale	Liber & Page	Verified By	Prcnt. Trans.
EALY, RAYMOND E(MARTHA MCP	HARTUNG, LUKE & TIFFANY	315,000	11/01/2018	WD	03-ARM'S LENGTH	6832/456	DEED	100.0

Property Address

9199 N 33 RD

Owner's Name/Address

HARTUNG, LUKE & TIFFANY
9199 N 33 RD
MANTON MI 49663

Tax Description

PAR "D" DESC AS COM AT SE COR OF SEC; E 1390.98 FT TO POB: W 850 FT;S28D15'12"W 376.86 FT TO PT ON SILVER CREEK; N61D57'52"W 169.44 FT; N80D18'14"W 123.89 FT; N 567.66 FT; E 1292.75 FT; S01D48'43"W 323.56 FT TO POB. --12.2 A M/L-- & PAR C; DESC AS COM AT SE COR OF SEC; N 1067.42 FT TO POB: S 87D57M20S W 633.57 FT; S 43D51M49S W 189.95 FT TO SILVER CR; ALG TRAV LN N 61D57M52S W 296.89 FT; N 28D15M12S E 376.86 FT; E 850 FT; S 323.56 FT TO POB. -7.7 A M/L- TOTAL 19.9 A TOG W/ & SUB TO EASMT GW. SEC. 15 T24N R10W -MANTON-

Comments/Influences

The Equalizer. Copyright (c) 1999 - 2009.
Licensed To: Township of Greenwood, County of Wexford, Michigan

Class: RESIDENTIAL-IMPROV Zoning:
School: MANTON CONSOLIDATED SCHOOLS
P.R.E. 100% 10/12/2021
:
2024 Est TCV 424,044 TCV/TFA: 219.03

Building Permit(s)	Date	Number	Status
RESIDENTIAL - REMODEL	11/17/2005	PM8780	
RESIDENTIAL - REMODEL	07/18/2005	PM8508	
RESIDENTIAL - REMODEL	07/08/2005	PE16964	
RESIDENTIAL - REMODEL	10/13/2004	PE16512	

X Improved | Vacant

Public Improvements

- Dirt Road
- X Gravel Road
- Paved Road
- Storm Sewer
- Sidewalk
- Water
- Sewer
- X Electric
- Gas
- Curb
- Street Lights
- Standard Utilities
- Underground Utils.

Topography of Site

- X Level
- X Rolling
- Low
- X High
- Landscaped
- Swamp
- X Wooded
- Pond
- Waterfront
- Ravine
- Wetland
- Flood Plain
- X OPEN/PINES

Who	When	What
GLA	05/03/2016	INSPECTION

Land Value Estimates for Land Table 4010.LAND VALUES

Description	Frontage	Depth	* Factors * Front	Depth	Rate	%Adj.	Reason	Value
	604.00	1.00	1.0000	1.0000	0	100		0
ACREAGE			19.410 Acres		3,200	100		62,112
ROW			0.490 Acres		0	100		0

604 Actual Front Feet, 19.91 Total Acres Total Est. Land Value = 62,112

Land Improvement Cost Estimates

Description	Rate	Size	% Good	Cash Value
D/W/P: 4in Concrete	7.01	81	45	256
D/W/P: 4in Concrete	7.01	114	45	360
Total Estimated Land Improvements True Cash Value =				616

Year	Land Value	Building Value	Assessed Value	Board of Review	Tribunal/ Other	Taxable Value
2024	31,100	180,900	212,000			145,328C
2023	25,200	147,600	172,800			138,408C
2022	22,600	124,500	147,100			131,818C
2021	21,000	125,800	146,800		146,800W	127,607C

*** Information herein deemed reliable but not guaranteed***

Building Type

X	Single Family
	Mobile Home
	Town Home
	Duplex
	A-Frame
X	Wood Frame

Building Style: RANCH

Yr Built	Remodeled
1999	2005

Condition: Good

Room List

	Basement
6	1st Floor
	2nd Floor
3	Bedrooms

(1) Exterior

	Wood/Shingle
X	Aluminum/Vinyl
	Brick
X	Insulation

(2) Windows

X	Many		Large
	Avg.	X	Avg.
	Few		Small

	Wood Sash
	Metal Sash
X	Vinyl Sash
X	Double Hung
	Horiz. Slide
	Casement
	Double Glass
X	Patio Doors
X	Storms & Screens

(3) Roof

X	Gable		Gambrel
	Hip		Mansard
	Flat		Shed
X	Asphalt Shingle		

Chimney:

(3) Roof (cont.)

	Eavestrough
X	Insulation
0	Front Overhang
0	Other Overhang

(4) Interior

X	Drywall		Plaster
	Paneled		Wood T&G

Trim & Decoration

	Ex	X	Ord		Min

Size of Closets

	Lg	X	Ord		Small

Doors: Solid X H.C.

(5) Floors

Kitchen: Hardwood
Other: Linoleum
Other: Carpeted

(6) Ceilings

X	Drywall
X	Cathedral

(7) Excavation

Basement: 0 S.F.
Crawl: 1920 S.F.
Slab: 0 S.F.
Height to Joists: 0.0

(8) Basement

	Conc. Block
	Poured Conc.
	Stone
	Treated Wood
	Concrete Floor

(9) Basement Finish

	Recreation	SF
	Living	SF
	Walkout Doors (B)	
	No Floor	SF
	Walkout Doors (A)	

(10) Floor Support

Joists:
Unsupported Len:
Cntr.Sup:

(11) Heating/Cooling

X	Gas		Oil		Elec.
	Wood		Coal		Steam

	Forced Air w/o Ducts
X	Forced Air w/ Ducts
	Forced Hot Water
	Electric Baseboard
	Elec. Ceil. Radiant
	Radiant (in-floor)
	Electric Wall Heat
	Space Heater
	Wall/Floor Furnace
	Forced Heat & Cool
	Heat Pump
	No Heating/Cooling
	Central Air
	Wood Furnace

(12) Electric

150 Amps Service

No./Qual. of Fixtures

	Ex.	X	Ord.		Min

No. of Elec. Outlets

	Many	X	Ave.		Few

(13) Plumbing

	Average Fixture(s)
3	3 Fixture Bath
	2 Fixture Bath
	Softener, Auto
	Softener, Manual
	Solar Water Heat
	No Plumbing
	Extra Toilet
	Extra Sink
	Separate Shower
	Ceramic Tile Floor
	Ceramic Tile Wains
	Ceramic Tub Alcove
	Vent Fan

(14) Water/Sewer

	Public Water
	Public Sewer
1	Water Well
1	1000 Gal Septic
	2000 Gal Septic

Lump Sum Items:

(15) Built-ins

	Appliance Allow.
	Cook Top
	Dishwasher
	Garbage Disposal
	Bath Heater
	Vent Fan
	Hot Tub
	Unvented Hood
	Vented Hood
	Intercom
	Jacuzzi Tub
	Jacuzzi repl.Tub
	Oven
	Microwave
	Standard Range
	Self Clean Range
	Sauna
	Trash Compactor
	Central Vacuum
	Security System

(15) Fireplaces

	Interior 1 Story
	Interior 2 Story
	2nd/Same Stack
	Two Sided
	Exterior 1 Story
	Exterior 2 Story
	Prefab 1 Story
	Prefab 2 Story
	Heat Circulator
	Raised Hearth
	Wood Stove
	Direct-Vented Gas

Class: C
Effec. Age: 23
Floor Area: 1,936
Total Base New : 361,792 E.C.F.
Total Depr Cost: 278,578 X 1.297
Estimated T.C.V: 361,316

(16) Porches/Decks

Area	Type
120	WGEP (1 Story)
314	Treated Wood
100	Treated Wood
288	Treated Wood

(17) Garage

Year Built:
Car Capacity:
Class: C
Exterior: Siding
Brick Ven.: 0
Stone Ven.: 0
Common Wall: 1 Wall
Foundation: 42 Inch
Finished ?:
Auto. Doors: 0
Mech. Doors: 0
Area: 480
% Good: 0
Storage Area: 0
No Conc. Floor: 0

Bsmnt Garage:

Carport Area:
Roof:

Cost Est. for Res. Bldg: 1 Single Family RANCH Cls C Blt 1999
(11) Heating System: Forced Air w/ Ducts
Ground Area = 1920 SF Floor Area = 1936 SF.
Phy/Ab.Phy/Func/Econ/Comb. % Good=77/100/100/100/77
Building Areas

Stories	Exterior	Foundation	Size	Cost New	Depr. Cost
1 Story	Siding	Crawl Space	1,920		
1 Story	Siding	Overhang	16		
			Total:	239,940	184,753
Other Additions/Adjustments					
Plumbing					
3 Fixture Bath			2	9,357	7,205
Water/Sewer					
1000 Gal Septic			1	4,899	3,772
Water Well, 100 Feet			1	5,849	4,504
Porches					
WGEP (1 Story)			120	11,034	8,496
Deck					
Treated Wood			314	5,608	4,318
Treated Wood			100	2,572	1,980
Treated Wood			288	5,299	4,080
Garages					
Class: C Exterior: Siding Foundation: 42 Inch (Unfinished)					
Base Cost			480	22,094	17,012
Common Wall: 1 Wall			1	-2,705	-2,083
Class: C Exterior: Siding Foundation: 18 Inch (Finished)					
Base Cost			1440	57,845	44,541
			Totals:	361,792	278,578

Notes:
ECF (RESIDENTIAL) 1.297 => TCV: 361,316

*** Information herein deemed reliable but not guaranteed***

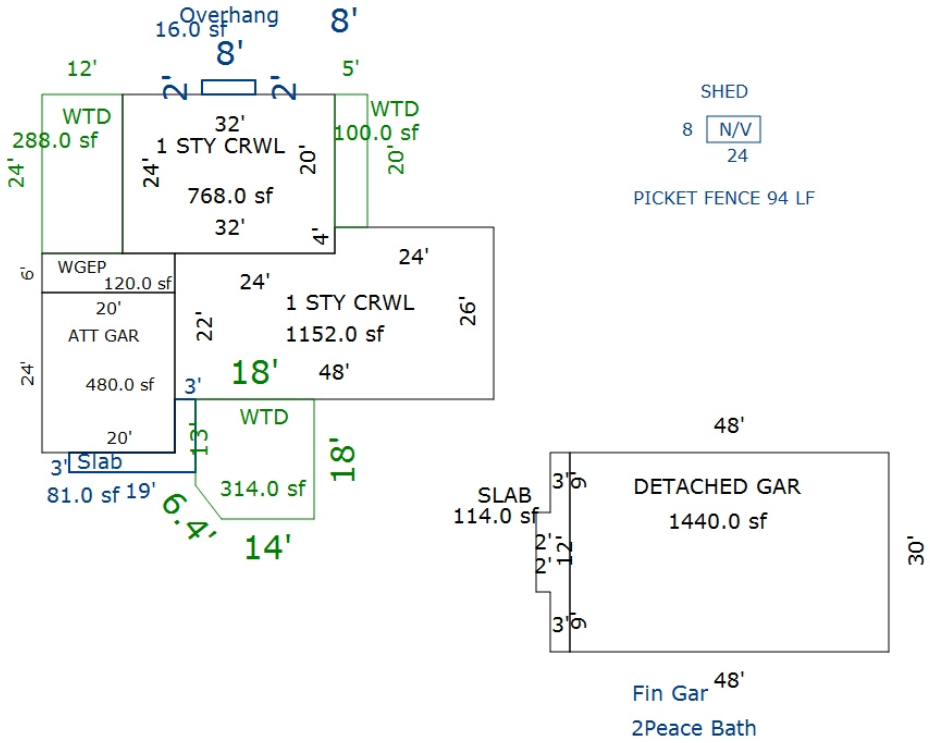

Sketch by Apex Sketch

*** Information herein deemed reliable but not guaranteed***

Parcel Number: 2410-15-4201 Jurisdiction: GREENWOOD TWP County: WEXFORD Printed on 02/15/2024

Grantor	Grantee	Sale Price	Sale Date	Inst. Type	Terms of Sale	Liber & Page	Verified By	Prcnt. Trans.

Property Address

3781 E 8 RD

Owner's Name/Address

DIEFENBACH FAMILY
TRUST
3781 E 8 RD
MANTON MI 49663

Tax Description

W 1/2 OF SE 1/4 & THAT PART OF E 1/2 OF SE 1/4 LYING S'LY OF SILVER CREEK EXC THAT PART LYING E OF A LINE COM 704 FT W OF E SEC LINE WITH INTER- SECTION OF SILVER CREEK AS PT OF BEG: TH S 135 FT ALONG SAID LINE; TH SE'LY TO A PT ON S SEC LINE 671 FT W OF SE COR & ENDING --90.04 A M/L-- GW. SEC. 15 T24N R10W -MANTON

Comments/Influences

The Equalizer. Copyright (c) 1999 - 2009. Licensed To: Township of Greenwood, County of Wexford, Michigan

Class: RESIDENTIAL-IMPROV Zoning:

School: MANTON CONSOLIDATED SCHOOLS

P.R.E. 100% / /

:

2024 Est TCV 486,693 TCV/TFA: 362.66

Building Permit(s)	Date	Number	Status
RESIDENTIAL - REMODEL	08/16/2000	PB9889	
RESIDENTIAL - NEW	08/16/2000	PE13163	

X Improved | Vacant

Public Improvements

	Dirt Road
	Gravel Road
X	Paved Road
	Storm Sewer
	Sidewalk
	Water
	Sewer
X	Electric
	Gas
	Curb
	Street Lights
	Standard Utilities
	Underground Utils.

Topography of Site

X	Level
X	Rolling
	Low
X	High
	Landscaped
	Swamp
X	Wooded
	Pond
	Waterfront
	Ravine
	Wetland
	Flood Plain
X	OPEN

Who	When	What
GLA	05/03/2016	INSPECTION

Land Value Estimates for Land Table 4010.LAND VALUES

Description	Frontage	Depth	* Factors * Front	Depth	Rate	%Adj.	Reason	Value
	1320.00	0.00	1.0000	1.0000	0	100		0
ACREAGE			88.600 Acres		2,511	100		222,487
ROW			1.440 Acres		0	100		0

1320 Actual Front Feet, 90.04 Total Acres Total Est. Land Value = 222,487

Land Improvement Cost Estimates

Description	Rate	Size	% Good	Cash Value
D/W/P: Asphalt Paving	3.12	26400	38	31,300
D/W/P: 4in Concrete	7.01	164	38	437
Wood Frame	22.73	640	38	5,528

Total Estimated Land Improvements True Cash Value = 37,265

Year	Land Value	Building Value	Assessed Value	Board of Review	Tribunal/ Other	Taxable Value
2024	111,200	132,100	243,300			114,205C
2023	89,600	110,800	200,400			108,767C
2022	80,600	95,300	175,900			103,588C
2021	72,900	95,800	168,700			100,279C

*** Information herein deemed reliable but not guaranteed***

Building Type

X	Single Family
	Mobile Home
	Town Home
	Duplex
	A-Frame
X	Wood Frame

Building Style: CABIN

Yr Built	Remodeled
1985	0

Condition: Fair

Room List

	Basement
	1st Floor
	2nd Floor
	Bedrooms

(1) Exterior

X	Wood/Shingle
	Aluminum/Vinyl
	Brick
	Insulation

(2) Windows

X	Many		Large
	Avg.	X	Avg.
	Few		Small

	Wood Sash
	Metal Sash
	Vinyl Sash
	Double Hung
	Horiz. Slide
	Casement
	Double Glass
	Patio Doors
	Storms & Screens

(3) Roof

X	Gable		Gambrel
	Hip		Mansard
	Flat		Shed
X	Asphalt Shingle		

Chimney: Brick

(3) Roof (cont.)

	Eavestrough
	Insulation
0	Front Overhang
0	Other Overhang

(4) Interior

	Drywall		Plaster
	Paneled		Wood T&G

Trim & Decoration

	Ex	X	Ord		Min

Size of Closets

	Lg	X	Ord		Small

Doors:		Solid	X	H.C.	

(5) Floors

Kitchen:
Other:
Other:

(6) Ceilings

(7) Excavation

Basement: 1230 S.F.
Crawl: 112 S.F.
Slab: 0 S.F.
Height to Joists: 0.0

(8) Basement

	Conc. Block
	Poured Conc.
	Stone
	Treated Wood
	Concrete Floor

(9) Basement Finish

	Recreation SF
	Living SF
	Walkout Doors (B)
	No Floor SF
	Walkout Doors (A)

(10) Floor Support

Joists:
Unsupported Len:
Cntr.Sup:

(11) Heating/Cooling

X	Gas		Oil		Elec.
	Wood		Coal		Steam

	Forced Air w/o Ducts
X	Forced Air w/ Ducts
	Forced Hot Water
	Electric Baseboard
	Elec. Ceil. Radiant
	Radiant (in-floor)
	Electric Wall Heat
	Space Heater
	Wall/Floor Furnace
	Forced Heat & Cool
	Heat Pump
	No Heating/Cooling
	Central Air
	Wood Furnace

(12) Electric

0 Amps Service

No./Qual. of Fixtures

	Ex.	X	Ord.		Min

No. of Elec. Outlets

	Many	X	Ave.		Few

(13) Plumbing

1	Average Fixture(s)
	3 Fixture Bath
	2 Fixture Bath
	Softener, Auto
	Softener, Manual
	Solar Water Heat
	No Plumbing
	Extra Toilet
	Extra Sink
	Separate Shower
	Ceramic Tile Floor
	Ceramic Tile Wains
	Ceramic Tub Alcove
	Vent Fan

(14) Water/Sewer

	Public Water
	Public Sewer
1	Water Well
1	1000 Gal Septic
	2000 Gal Septic

Lump Sum Items:

(15) Built-ins

	Appliance Allow.
	Cook Top
	Dishwasher
	Garbage Disposal
	Bath Heater
	Vent Fan
	Hot Tub
	Unvented Hood
	Vented Hood
	Intercom
	Jacuzzi Tub
	Jacuzzi repl.Tub
	Oven
	Microwave
	Standard Range
	Self Clean Range
	Sauna
	Trash Compactor
	Central Vacuum
	Security System

(15) Fireplaces

	Interior 1 Story
	Interior 2 Story
	2nd/Same Stack
	Two Sided
	Exterior 1 Story
	Exterior 2 Story
	Prefab 1 Story
	Prefab 2 Story
	Heat Circulator
	Raised Hearth
	Wood Stove
	Direct-Vented Gas

Class: C
Effec. Age: 47
Floor Area: 1,342
Total Base New : 309,679 E.C.F.
Total Depr Cost: 164,128 X 1.297
Estimated T.C.V: 212,874

(16) Porches/Decks

Area	Type
180	CCP (1 Story)
120	CCP (1 Story)
120	CCP (1 Story)

(17) Garage

Year Built:
Car Capacity:
Class: C
Exterior: Siding
Brick Ven.: 0
Stone Ven.: 0
Common Wall: 1 Wall
Foundation: 42 Inch
Finished ?:
Auto. Doors: 0
Mech. Doors: 0
Area: 308
% Good: 0
Storage Area: 0
No Conc. Floor: 0

Bsmnt Garage:

Carport Area:
Roof:

Cost Est. for Res. Bldg: 1 Single Family CABIN Cls C Blt 1985
(11) Heating System: Forced Air w/ Ducts
Ground Area = 1342 SF Floor Area = 1342 SF.
Phy/Ab.Phy/Func/Econ/Comb. % Good=53/100/100/100/53
Building Areas

Stories	Exterior	Foundation	Size	Cost New	Depr. Cost
1+ Story	Siding	Basement	510		
1 Story	Siding	Crawl Space	112		
1 Story	Siding	Basement	720		
			Total:	199,182	105,567
Other Additions/Adjustments					
Water/Sewer					
1000 Gal Septic			1	4,899	2,596
Water Well, 100 Feet			1	5,849	3,100
Porches					
CCP (1 Story)			180	4,831	2,560
CCP (1 Story)			120	3,348	1,774
CCP (1 Story)			120	3,348	1,774
Garages					
Class: C Exterior: Siding Foundation: 42 Inch (Unfinished)					
Base Cost			308	16,595	8,795
Common Wall: 1 Wall			1	-2,705	-1,434
Class: CD Exterior: Pole (Unfinished)					
Base Cost			1200	26,100	13,833
Class: C Exterior: Siding Foundation: 18 Inch (Unfinished)					
Base Cost			1416	45,864	24,308
Local Cost Items					
POLE LEANTO DIRT			640	2,368	1,255
			Totals:	309,679	164,128

Notes:
ECF (RESIDENTIAL) 1.297 => TCV: 212,874

*** Information herein deemed reliable but not guaranteed***

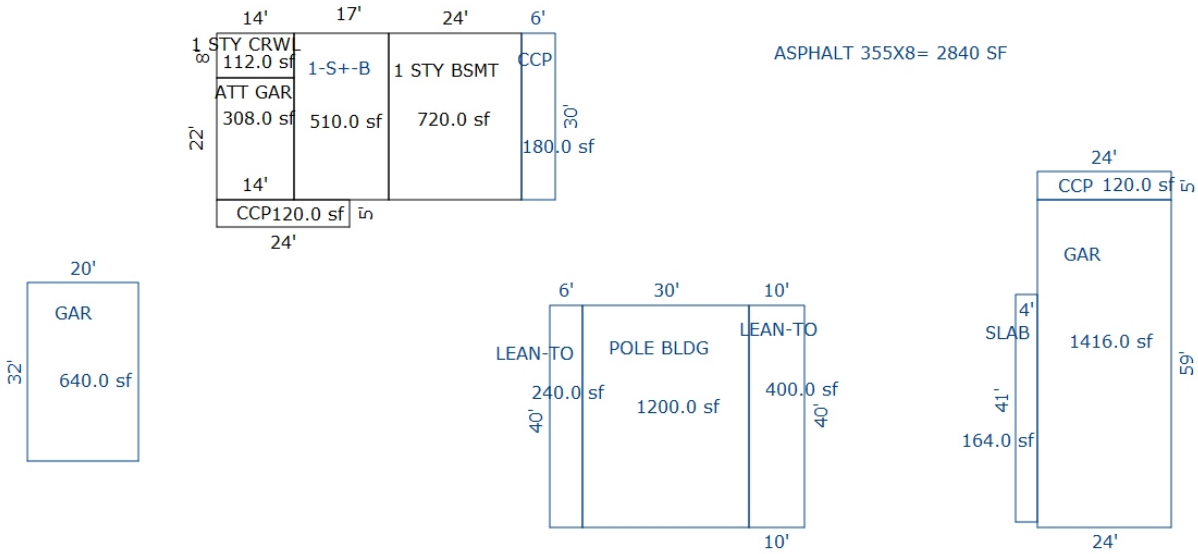

Sketch by Apex Sketch

*** Information herein deemed reliable but not guaranteed***

Building Type

X	Single Family
	Mobile Home
	Town Home
	Duplex
	A-Frame
X	Wood Frame

Building Style: PLAIN

Yr Built	Remodeled
0	0

Condition: Good

Room List

	Basement
	1st Floor
	2nd Floor
	Bedrooms

(1) Exterior

X	Wood/Shingle
	Aluminum/Vinyl
	Brick
X	Insulation

(2) Windows

X	Many		Large
	Avg.	X	Avg.
	Few		Small

	Wood Sash
	Metal Sash
X	Vinyl Sash
	Double Hung
	Horiz. Slide
	Casement
	Double Glass
	Patio Doors
X	Storms & Screens

(3) Roof

X	Gable		Gambrel
	Hip		Mansard
	Flat		Shed

X	Asphalt Shingle

Chimney:

(3) Roof (cont.)

	Eavestrough
X	Insulation
0	Front Overhang
0	Other Overhang

(4) Interior

X	Drywall		Plaster
	Paneled		Wood T&G

Trim & Decoration

	Ex	X	Ord		Min

Size of Closets

	Lg	X	Ord		Small

Doors:		Solid	X	H.C.	

(5) Floors

Kitchen:
Other: Linoleum
Other: Carpeted

(6) Ceilings

X	Drywall

(7) Excavation

Basement: 0 S.F.
Crawl: 0 S.F.
Slab: 0 S.F.
Height to Joists: 0.0

(8) Basement

	Conc. Block
	Poured Conc.
	Stone
	Treated Wood
	Concrete Floor

(9) Basement Finish

	Recreation SF
	Living SF
	Walkout Doors (B)
	No Floor SF
	Walkout Doors (A)

(10) Floor Support

Joists:
Unsupported Len:
Cntr.Sup:

(11) Heating/Cooling

X	Gas		Oil		Elec.
	Wood		Coal		Steam

	Forced Air w/o Ducts
X	Forced Air w/ Ducts
	Forced Hot Water
	Electric Baseboard
	Elec. Ceil. Radiant
	Radiant (in-floor)
	Electric Wall Heat
	Space Heater
	Wall/Floor Furnace
	Forced Heat & Cool
	Heat Pump
	No Heating/Cooling
	Central Air
	Wood Furnace

(12) Electric

150	Amps Service

No./Qual. of Fixtures

	Ex.	X	Ord.		Min

No. of Elec. Outlets

	Many	X	Ave.		Few

(13) Plumbing

1	Average Fixture(s)
	3 Fixture Bath
	2 Fixture Bath
	Softener, Auto
	Softener, Manual
	Solar Water Heat
	No Plumbing
	Extra Toilet
	Extra Sink
	Separate Shower
	Ceramic Tile Floor
	Ceramic Tile Wains
	Ceramic Tub Alcove
	Vent Fan

(14) Water/Sewer

	Public Water
	Public Sewer
	Water Well
	1000 Gal Septic
	2000 Gal Septic

Lump Sum Items:

(15) Built-ins

	Appliance Allow.
	Cook Top
	Dishwasher
	Garbage Disposal
	Bath Heater
	Vent Fan
	Hot Tub
	Unvented Hood
	Vented Hood
	Intercom
	Jacuzzi Tub
	Jacuzzi repl.Tub
	Oven
	Microwave
	Standard Range
	Self Clean Range
	Sauna
	Trash Compactor
	Central Vacuum
	Security System

(15) Fireplaces

	Interior 1 Story
	Interior 2 Story
	2nd/Same Stack
	Two Sided
	Exterior 1 Story
	Exterior 2 Story
	Prefab 1 Story
	Prefab 2 Story
	Heat Circulator
	Raised Hearth
	Wood Stove
	Direct-Vented Gas

Class: CD
Effec. Age: 57
Floor Area: 0
Total Base New : 24,102 E.C.F.
Total Depr Cost: 10,846 X 1.297
Estimated T.C.V: 14,067

(16) Porches/Decks

Area	Type

(17) Garage

Year Built:
Car Capacity:
Class: CD
Exterior: Siding
Brick Ven.: 0
Stone Ven.: 0
Common Wall: Detache
Foundation: 42 Inch
Finished ?:
Auto. Doors: 0
Mech. Doors: 0
Area: 640
% Good: 0
Storage Area: 0
No Conc. Floor: 0

Bsmnt Garage:

Carport Area:
Roof:

Cost Est. for Res. Bldg: 2 Single Family PLAIN Cls CD Blt 0
(11) Heating System: Forced Air w/ Ducts
Ground Area = 0 SF Floor Area = 0 SF.
Phy/Ab.Phy/Func/Econ/Comb. % Good=45/100/100/100/45
Building Areas

Stories	Exterior	Foundation	Size	Cost New	Depr. Cost
Other Additions/Adjustments					
Garages					
Class: CD Exterior: Siding Foundation: 42 Inch (Unfinished)					
Base Cost			640	24,102	10,846
			Totals:	24,102	10,846

Notes:
ECF (RESIDENTIAL) 1.297 => TCV: 14,067

*** Information herein deemed reliable but not guaranteed***

Parcel Number: 2410-15-4401 Jurisdiction: GREENWOOD TWP County: WEXFORD Printed on 02/15/2024

Grantor	Grantee	Sale Price	Sale Date	Inst. Type	Terms of Sale	Liber & Page	Verified By	Prcnt. Trans.
YAKLIN, LAWRENCE D	YAKLIN, LAWRENCE D LE	0	06/14/2019	QC	18-LIFE ESTATE	685/664	DEED	0.0
WHITE, TODD A	YAKLIN, LAWRENCE D	49,000	09/28/2006	WD	03-ARM'S LENGTH	592:2695	DEED	0.0
KRUEGER, ROGER A. JR.	WHITE, TODD A.	24,900	02/25/1989	WD	03-ARM'S LENGTH	314:505	DEED	0.0

Property Address

9075 N 33 RD

Owner's Name/Address

YAKLIN, LAWRENCE D LE
9075 N 33 RD
MANTON MI 49663

Tax Description

PAR COM 247.5 FT N OF SE COR OF SEC: N 423.06 FT; S 87D57'20" W 534.91 FT; S 10D31'40" E 136.18 FT; S 79D28'20" W 26 FT; S 11D03'50" W 185.11 FT; S TO PT 247.5 FT N OF SEC LINE; E TO POB. 5.12 A M/L GW. SEC. 15 T24N R10W-MANTON-

Comments/Influences

Class: RESIDENTIAL-IMPROV Zoning:

School: MANTON CONSOLIDATED SCHOOLS

P.R.E. 100% 11/29/2020

:

2024 Est TCV 76,575 TCV/TFA: 159.53

Building Permit(s)	Date	Number	Status
RESIDENTIAL - REMODEL	11/17/2006	PM9395	
RESIDENTIAL - NEW	10/20/2006	PM9331	
RESIDENTIAL - REMODEL	10/04/2006	PE17709	

X Improved | Vacant

Public Improvements

- X Gravel Road
- X Electric
- X OPEN

Topography of Site

- X Level
- X Rolling
- X Low
- X High
- X Wooded

Land Value Estimates for Land Table 4010.LAND VALUES

Description	Frontage	Depth	* Factors * Front	Depth	Rate	%Adj.	Reason	Value
ACREAGE			4.800 Acres		5,098	100		24,472
ROW			0.320 Acres		0	100		0
			5.12 Total Acres		Total Est. Land Value =			24,472

Land Improvement Cost Estimates

Description	Rate	Size	% Good	Cash Value
Wood Frame	28.00	64	16	287
Wood Frame	22.35	120	16	429
Total Estimated Land Improvements True Cash Value =				716

Year	Land Value	Building Value	Assessed Value	Board of Review	Tribunal/ Other	Taxable Value
2024	12,200	26,100	38,300			22,971C
2023	10,500	21,500	32,000			21,878C
2022	7,400	18,300	25,700			20,837C
2021	8,500	18,500	27,000			20,172C

Who	When	What
GLA	05/13/2021	INSPECTION
LM	09/21/2009	DATA ENTER
LM	08/26/2009	INSPECTED

The Equalizer. Copyright (c) 1999 - 2009. Licensed To: Township of Greenwood, County of Wexford, Michigan

*** Information herein deemed reliable but not guaranteed***

Building Type

X	Single Family
	Mobile Home
	Town Home
	Duplex
	A-Frame
X	Wood Frame

Building Style: PLAIN

Yr Built	Remodeled
0	0

Condition: Fair

Room List

	Basement
	1st Floor
	2nd Floor
	Bedrooms

(1) Exterior

X	Wood/Shingle
	Aluminum/Vinyl
	Brick
	Insulation

(2) Windows

	Many		Large
X	Avg.	X	Avg.
	Few		Small

	Wood Sash
	Metal Sash
X	Vinyl Sash
X	Double Hung
	Horiz. Slide
	Casement
	Double Glass
	Patio Doors
X	Storms & Screens

(3) Roof

X	Gable		Gambrel
	Hip		Mansard
	Flat		Shed

X	Asphalt Shingle

Chimney: Block

(3) Roof (cont.)

	Eavestrough
	Insulation
0	Front Overhang
0	Other Overhang

(4) Interior

	Drywall		Plaster
	Paneled		Wood T&G

Trim & Decoration

	Ex	X	Ord		Min

Size of Closets

	Lg	X	Ord		Small

Doors:		Solid	X	H.C.	

(5) Floors

Kitchen:
Other:
Other:

(6) Ceilings

(7) Excavation

Basement: 384 S.F.
Crawl: 0 S.F.
Slab: 0 S.F.
Height to Joists: 0.0

(8) Basement

	Conc. Block
	Poured Conc.
	Stone
	Treated Wood
	Concrete Floor

(9) Basement Finish

	Recreation SF
	Living SF
	Walkout Doors (B)
	No Floor SF
	Walkout Doors (A)

(10) Floor Support

Joists:
Unsupported Len:
Cntr.Sup:

(11) Heating/Cooling

X	Gas		Oil		Elec.
	Wood		Coal		Steam

	Forced Air w/o Ducts
X	Forced Air w/ Ducts
	Forced Hot Water
	Electric Baseboard
	Elec. Ceil. Radiant
	Radiant (in-floor)
	Electric Wall Heat
	Space Heater
	Wall/Floor Furnace
	Forced Heat & Cool
	Heat Pump
	No Heating/Cooling

	Central Air
	Wood Furnace

(12) Electric

0	Amps Service

No./Qual. of Fixtures

	Ex.	X	Ord.		Min

No. of Elec. Outlets

	Many	X	Ave.		Few

(13) Plumbing

1	Average Fixture(s)
	3 Fixture Bath
	2 Fixture Bath
	Softener, Auto
	Softener, Manual
	Solar Water Heat
	No Plumbing
	Extra Toilet
	Extra Sink
	Separate Shower
	Ceramic Tile Floor
	Ceramic Tile Wains
	Ceramic Tub Alcove
	Vent Fan

(14) Water/Sewer

	Public Water
	Public Sewer
1	Water Well
1	1000 Gal Septic
	2000 Gal Septic

Lump Sum Items:

(15) Built-ins

	Appliance Allow.
	Cook Top
	Dishwasher
	Garbage Disposal
	Bath Heater
	Vent Fan
	Hot Tub
	Unvented Hood
	Vented Hood
	Intercom
	Jacuzzi Tub
	Jacuzzi repl.Tub
	Oven
	Microwave
	Standard Range
	Self Clean Range
	Sauna
	Trash Compactor
	Central Vacuum
	Security System

(15) Fireplaces

	Interior 1 Story
	Interior 2 Story
	2nd/Same Stack
	Two Sided
	Exterior 1 Story
	Exterior 2 Story
	Prefab 1 Story
	Prefab 2 Story
	Heat Circulator
	Raised Hearth
	Wood Stove
	Direct-Vented Gas

Class: CD
Effec. Age: 54
Floor Area: 480
Total Base New : 86,108 E.C.F.
Total Depr Cost: 39,620 X 1.297
Estimated T.C.V: 51,387

(16) Porches/Decks

Area	Type
144	WSEP (1 Story)

(17) Garage

Year Built:
Car Capacity:
Class:
Exterior:
Brick Ven.:
Stone Ven.:
Common Wall:
Foundation:
Finished ?:
Auto. Doors:
Mech. Doors:
Area:
% Good:
Storage Area:
No Conc. Floor:

Bsmnt Garage:

Carport Area:
Roof:

Cost Est. for Res. Bldg: 1 Single Family PLAIN Cls CD Blt 0
(11) Heating System: Forced Air w/ Ducts
Ground Area = 384 SF Floor Area = 480 SF.
Phy/Ab.Phy/Func/Econ/Comb. % Good=46/100/100/100/46
Building Areas

Stories	Exterior	Foundation	Size	Cost New	Depr. Cost	
1.25 Story	Siding	Basement	384			
			Total:	68,259	31,400	
Other Additions/Adjustments						
Water/Sewer						
1000 Gal Septic			1	4,582	2,108	
Water Well, 100 Feet			1	5,680	2,613	
Porches						
WSEP (1 Story)			144	7,124	3,277	
Local Cost Items						
FREE STANDING ROOF			64	463	222	*4
			Totals:	86,108	39,620	

Notes:

ECF (RESIDENTIAL) 1.297 => TCV: 51,387

*** Information herein deemed reliable but not guaranteed***

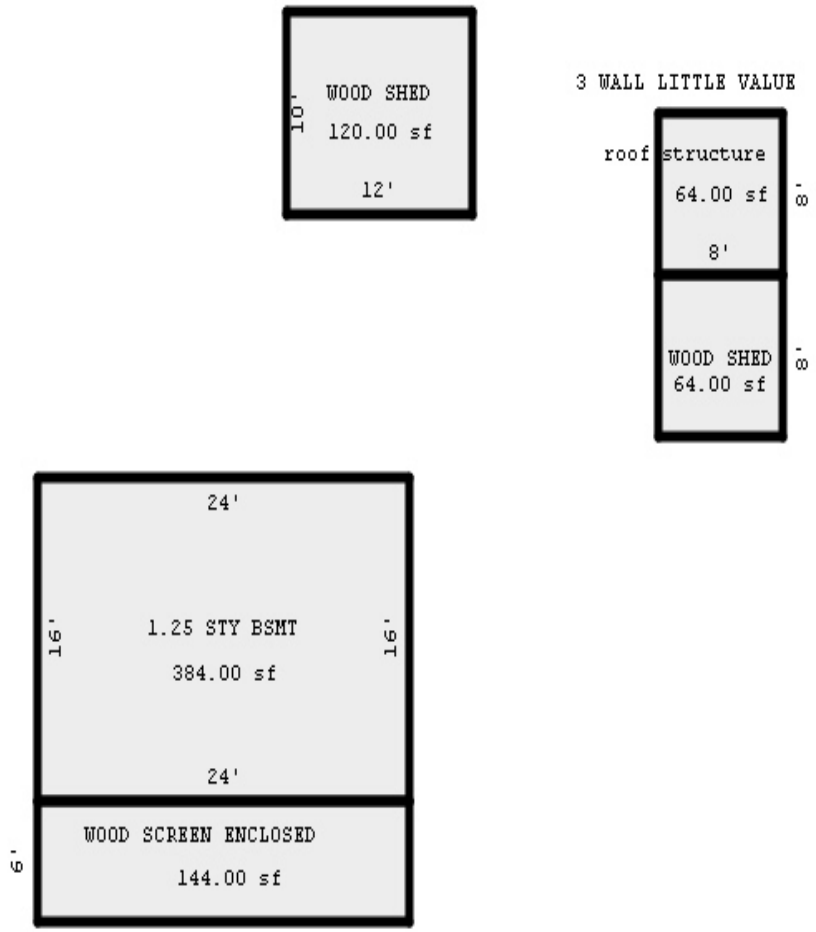

Sketch by Apex Medina™

*** Information herein deemed reliable but not guaranteed***

Parcel Number: 2410-15-4402 Jurisdiction: GREENWOOD TWP County: WEXFORD Printed on 02/15/2024

Grantor	Grantee	Sale Price	Sale Date	Inst. Type	Terms of Sale	Liber & Page	Verified By	Prcnt. Trans.
PIKE, RAYMOND W.	POSTEMA ET AL, LAWRENCE A	20,000	01/10/1995	WD	03-ARM'S LENGTH	342:887	DEED	0.0

Property Address

3905 E 8 RD

Owner's Name/Address

POSTEMA, LAWRENCE & KRISTI S
& JEFFREY POSTEMA & TAMMY L
1145 HOLTON WHITEHALL RD
WHITEHALL MI 49461

Tax Description

PAR COM AT SE COR OF SEC; TH W 560 FT TO POB: W 111 FT; N05D33'19"W 261.98 FT TO A PT 135 FT S OF BANK OF SILVER CREEK; TH N 129.50 FT TO AN INTERMEDIATE TRAVERSE PT ALONG BANK OF SILVER CREEK ; TH S 43D48'05"E 107.13 FT; S27D40'56" E 56.19 FT; S 57D25'27" E 46.85 FT TO A PT 560 FT W OF E LINE OF SEC; TH S 237.56 FT TO POB. - .93 A. GW. SEC. 15 T24N R10W - MANTON-

Comments/Influences

The Equalizer. Copyright (c) 1999 - 2009.
Licensed To: Township of Greenwood, County of Wexford, Michigan

Class: RESIDENTIAL-IMPROV Zoning:

School: MANTON CONSOLIDATED SCHOOLS

P.R.E. 0%

:

2024 Est TCV 48,271 TCV/TFA: 52.24

Building Permit(s)	Date	Number	Status

X Improved | Vacant

	Public Improvements
	Dirt Road
	Gravel Road
X	Paved Road
	Storm Sewer
	Sidewalk
	Water
	Sewer
X	Electric
	Gas
	Curb
	Street Lights
	Standard Utilities
	Underground Utils.

	Topography of Site
X	Level
X	Rolling
	Low
X	High
	Landscaped
	Swamp
X	Wooded
	Pond
	Waterfront
	Ravine
	Wetland
	Flood Plain
X	OPEN

Who	When	What
GLA	05/03/2016	INSPECTION

Land Value Estimates for Land Table 4010.LAND VALUES

Description	Frontage	Depth	* Factors * Front	Depth	Rate	%Adj.	Reason	Value
	66.00	0.00	1.0000	1.0000	0	100		0
ACREAGE			0.850 Acres		10,953	100		9,310
ROW			0.080 Acres		0	100		0
66 Actual Front Feet, 0.93 Total Acres							Total Est. Land Value =	9,310

Land Improvement Cost Estimates

Description	Rate	Size	% Good	Cash Value
Wood Frame	39.52	28	25	277
Wood Frame	23.47	330	25	1,936
Total Estimated Land Improvements True Cash Value =				2,213

Year	Land Value	Building Value	Assessed Value	Board of Review	Tribunal/ Other	Taxable Value
2024	4,700	19,400	24,100			12,658C
2023	2,600	15,900	18,500			12,056C
2022	2,400	13,500	15,900			11,482C
2021	2,800	11,700	14,500			11,116C

*** Information herein deemed reliable but not guaranteed***

Building Type

	Single Family
X	Mobile Home
	Town Home
	Duplex
	A-Frame

X	Wood Frame

Building Style: SWT/DWT

Yr Built	Remodeled
0	0

Condition: Good

Room List

	Basement
	1st Floor
	2nd Floor
	Bedrooms

(1) Exterior

	Wood/Shingle
X	Aluminum/Vinyl
	Brick
X	Insulation

(2) Windows

X	Many Avg. Few		Large Avg. Small

	Wood Sash
	Metal Sash
X	Vinyl Sash
	Double Hung
	Horiz. Slide
	Casement
	Double Glass
	Patio Doors
X	Storms & Screens

(3) Roof

X	Gable		Gambrel
	Hip		Mansard
	Flat		Shed

X	Asphalt Shingle

Chimney:

(3) Roof (cont.)

	Eavestrough
X	Insulation
0	Front Overhang
0	Other Overhang

(4) Interior

X	Drywall		Plaster
	Paneled		Wood T&G

Trim & Decoration

	Ex	X	Ord		Min

Size of Closets

	Lg	X	Ord		Small

Doors:		Solid	X	H.C.	

(5) Floors

Kitchen:
Other: Linoleum
Other: Carpeted

(6) Ceilings

X	Drywall		

(7) Excavation

Basement: 0 S.F.
Crawl: 264 S.F.
Slab: 0 S.F.
Height to Joists: 0.0

(8) Basement

	Conc. Block
	Poured Conc.
	Stone
	Treated Wood
	Concrete Floor

(9) Basement Finish

	Recreation SF
	Living SF
	Walkout Doors (B)
	No Floor SF
	Walkout Doors (A)

(10) Floor Support

Joists:
Unsupported Len:
Cntr.Sup:

(11) Heating/Cooling

X	Gas		Oil		Elec.
	Wood		Coal		Steam

X	Forced Warm Air
	Wall Furnace
	Warm & Cool Air
	Heat Pump

	Central Air
	Wood Furnace

(12) Electric

150	Amps Service

No./Qual. of Fixtures

	Ex.	X	Ord.		Min

No. of Elec. Outlets

	Many	X	Ave.		Few

(13) Plumbing

	Average Fixture(s)
1	3 Fixture Bath
	2 Fixture Bath
	Softener, Auto
	Softener, Manual
	Solar Water Heat
	No Plumbing
	Extra Toilet
	Extra Sink
	Separate Shower
	Ceramic Tile Floor
	Ceramic Tile Wains
	Ceramic Tub Alcove
	Vent Fan

(14) Water/Sewer

	Public Water
	Public Sewer
1	Water Well
1	1000 Gal Septic
	2000 Gal Septic

Lump Sum Items:

(15) Built-ins

	Appliance Allow.
	Cook Top
	Dishwasher
	Garbage Disposal
	Bath Heater
	Vent Fan
	Hot Tub
	Unvented Hood
	Vented Hood
	Intercom
	Jacuzzi Tub
	Jacuzzi repl.Tub
	Oven
	Microwave
	Standard Range
	Self Clean Range
	Sauna
	Trash Compactor
	Central Vacuum
	Security System

(15) Fireplaces

	Interior 1 Story
	Interior 2 Story
	2nd/Same Stack
	Two Sided
	Exterior 1 Story
	Exterior 2 Story
	Prefab 1 Story
	Prefab 2 Story
	Heat Circulator
	Raised Hearth
	Wood Stove
	Direct-Vented Gas

Class: Fair
Effec. Age: 25
Floor Area:
Total Base New : 80,095 E.C.F.
Total Depr Cost: 28,333 X 1.297
Estimated T.C.V: 36,748

(16) Porches/Decks

Area	Type
55	WGEP (1 Story)
114	WPP

(17) Garage

Year Built:
Car Capacity:
Class:
Exterior:
Brick Ven.:
Stone Ven.:
Common Wall:
Foundation:
Finished ?:
Auto. Doors:
Mech. Doors:
Area:
% Good:
Storage Area:
No Conc. Floor:

Bsmnt Garage:

Carport Area:
Roof:

Cost Est. for Res. Bldg: 1 Mobile Home SWT/DWT Cls Fair Blt 0
(11) Heating System: Wall Furnace
Ground Area = 924 SF Floor Area = 924 SF.
Phy/Ab.Phy/Func/Econ/Comb. % Good=35/100/100/100/35
Building Areas

Type	Ext. Walls	Roof/Fnd.	Size	Cost New	Depr. Cost	
Main Home	Ribbed	Metal	660			
Addition	Siding	Crawl	264			
			Total:	57,012	19,954	
Other Additions/Adjustments						
Skirting, Metal or Vinyl, Vertical			134	1,494	523	
Water/Sewer						
1000 Gal Septic			1	4,582	1,604	
Water Well, 100 Feet			1	5,680	1,988	
Porches						
WGEP (1 Story)			55	4,699	1,645	
WPP			114	2,884	1,009	
Local Cost Items						
SHED			480	3,744	1,610	*4
			Totals:	80,095	28,333	

Notes:
ECF (RESIDENTIAL) 1.297 => TCV: 36,748

*** Information herein deemed reliable but not guaranteed***

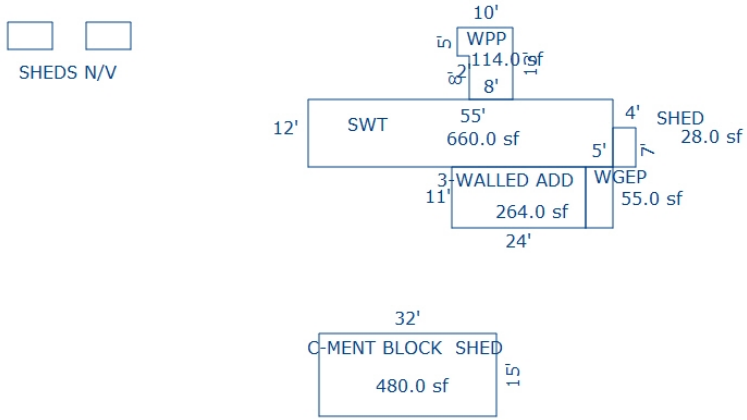

Sketch by Apex Sketch

*** Information herein deemed reliable but not guaranteed***

Parcel Number: 2410-15-4403 Jurisdiction: GREENWOOD TWP County: WEXFORD Printed on 02/15/2024

Grantor	Grantee	Sale Price	Sale Date	Inst. Type	Terms of Sale	Liber & Page	Verified By	Prcnt. Trans.
BUSHWAY, KEN	GIFFORD, SKYLAR JAMES	184,900	01/09/2020	WD	03-ARM'S LENGTH	686/1516	DEED	100.0
BUSHWAY, KEN & HEATHER L J	BUSHWAY, KEN	0	05/06/2015	QC	09-FAMILY	675/981	DEED	0.0
WETHERELL, GORDON E & NORA	BUSHWAY, KEN & HEATHER L J	129,500	07/21/2011	WD	03-ARM'S LENGTH	640/2543	DEED	100.0
LEONARD, GAIL	WETHERELL, GORDON E & NORA	0	12/04/1993	QC	21-NOT USED/OTHER	640/2542	DEED	0.0

Property Address
3925 E 8 RD

Owner's Name/Address
GIFFORD, SKYLAR JAMES
3925 E 8 RD
MANTON MI 49663

Tax Description
A PAR COM 380 FT W OF SE COR OF SEC 15: N 15 RDS; W 180 FT; S 15 RDS; E 180 FT. TO BEG. --1.02 A M/L-- GW. SEC. 15 T24N R10W - MANTON

Comments/Influences

The Equalizer. Copyright (c) 1999 - 2009. Licensed To: Township of Greenwood, County of Wexford, Michigan

Class: RESIDENTIAL-IMPROV Zoning:
School: MANTON CONSOLIDATED SCHOOLS
P.R.E. 100% 07/19/2022
:
2024 Est TCV 272,210 TCV/TFA: 113.42

Building Permit(s)	Date	Number	Status
RESIDENTIAL - REMODEL	04/08/2003	PB11448	
RESIDENTIAL - NEW	04/08/2003	PE15207	
RESIDENTIAL - NEW	01/12/1995	PE8689	

X Improved | Vacant

Public Improvements

	Dirt Road
	Gravel Road
X	Paved Road
	Storm Sewer
	Sidewalk
	Water
	Sewer
X	Electric
	Gas
	Curb
	Street Lights
	Standard Utilities
	Underground Utils.

Topography of Site

X	Level
X	Rolling
	Low
X	High
	Landscaped
	Swamp
X	Wooded
	Pond
	Waterfront
	Ravine
	Wetland
	Flood Plain
X	OPEN

Who	When	What
GLA	05/13/2021	INSPECTION
LM	12/22/2011	SALES INSP
GLA	05/03/2016	INSPECTION

Land Value Estimates for Land Table 4010.LAND VALUES

Description	Frontage	Depth	* Factors * Front	Depth	Rate	%Adj.	Reason	Value
	240.00	0.00	1.0000	1.0000	0	100		0
ACREAGE			0.890 Acres		10,953	100		9,748
ROW			0.130 Acres		0	100		0

240 Actual Front Feet, 1.02 Total Acres Total Est. Land Value = 9,748

Land Improvement Cost Estimates

Description	Rate	Size	% Good	Cash Value
Fencing: Wd, Split, 2 Rail	14.72	100	28	412
D/W/P: 3.5 Concrete	5.82	1008	38	2,229
D/W/P: 3.5 Concrete	5.82	153	38	338
D/W/P: Brick on Sand	15.32	90	0	0
D/W/P: 3.5 Concrete	5.82	30	38	66

Total Estimated Land Improvements True Cash Value = 3,045

Year	Land Value	Building Value	Assessed Value	Board of Review	Tribunal/ Other	Taxable Value
2024	4,900	131,200	136,100			103,855C
2023	2,700	107,400	110,100			98,910C
2022	3,200	91,000	94,200		94,200W	94,200S
2021	3,600	92,200	95,800		95,800A	95,800S

*** Information herein deemed reliable but not guaranteed***

Building Type

X	Single Family
	Mobile Home
	Town Home
	Duplex
	A-Frame
X	Wood Frame

Building Style: TWO STORY

Yr Built	Remodeled
1985	1996

Condition: Average

Room List

	Basement
	1st Floor
	2nd Floor
	Bedrooms

(1) Exterior

X	Wood/Shingle
	Aluminum/Vinyl
	Brick
	Insulation

(2) Windows

X	Many		Large
	Avg.	X	Avg.
	Few		Small

	Wood Sash
	Metal Sash
	Vinyl Sash
	Double Hung
	Horiz. Slide
	Casement
	Double Glass
	Patio Doors
	Storms & Screens

(3) Roof

X	Gable		Gambrel
	Hip		Mansard
	Flat		Shed
X	Asphalt Shingle		

Chimney: Brick

(3) Roof (cont.)

	Eavestrough
	Insulation
0	Front Overhang
0	Other Overhang

(4) Interior

	Drywall		Plaster
	Paneled		Wood T&G

Trim & Decoration

	Ex	X	Ord		Min

Size of Closets

	Lg	X	Ord		Small

Doors:		Solid	X	H.C.	

(5) Floors

Kitchen:
Other:
Other:

(6) Ceilings

(7) Excavation

Basement: 0 S.F.
Crawl: 1152 S.F.
Slab: 0 S.F.
Height to Joists: 0.0

(8) Basement

	Conc. Block
	Poured Conc.
	Stone
	Treated Wood
	Concrete Floor

(9) Basement Finish

	Recreation SF
	Living SF
	Walkout Doors (B)
	No Floor SF
	Walkout Doors (A)

(10) Floor Support

Joists:
Unsupported Len:
Cntr.Sup:

(11) Heating/Cooling

X	Gas		Oil		Elec.
	Wood		Coal		Steam

	Forced Air w/o Ducts
X	Forced Air w/ Ducts
	Forced Hot Water
	Electric Baseboard
	Elec. Ceil. Radiant
	Radiant (in-floor)
	Electric Wall Heat
	Space Heater
	Wall/Floor Furnace
	Forced Heat & Cool
	Heat Pump
	No Heating/Cooling
	Central Air
	Wood Furnace

(12) Electric

0	Amps Service

No./Qual. of Fixtures

	Ex.	X	Ord.		Min

No. of Elec. Outlets

	Many	X	Ave.		Few

(13) Plumbing

2	Average Fixture(s)
	3 Fixture Bath
	2 Fixture Bath
	Softener, Auto
	Softener, Manual
	Solar Water Heat
	No Plumbing
	Extra Toilet
	Extra Sink
	Separate Shower
	Ceramic Tile Floor
	Ceramic Tile Wains
	Ceramic Tub Alcove
	Vent Fan

(14) Water/Sewer

	Public Water
	Public Sewer
1	Water Well
1	1000 Gal Septic
	2000 Gal Septic

Lump Sum Items:
109

(15) Built-ins

	Appliance Allow.
	Cook Top
	Dishwasher
	Garbage Disposal
	Bath Heater
	Vent Fan
	Hot Tub
	Unvented Hood
	Vented Hood
	Intercom
	Jacuzzi Tub
	Jacuzzi repl.Tub
	Oven
	Microwave
	Standard Range
	Self Clean Range
	Sauna
	Trash Compactor
	Central Vacuum
	Security System

(15) Fireplaces

	Interior 1 Story
	Interior 2 Story
	2nd/Same Stack
	Two Sided
	Exterior 1 Story
	Exterior 2 Story
	Prefab 1 Story
	Prefab 2 Story
	Heat Circulator
	Raised Hearth
	Wood Stove
1	Direct-Vented Gas

Class: C
Effec. Age: 34
Floor Area: 2,400
Total Base New : 303,052 E.C.F.
Total Depr Cost: 200,013 X 1.297
Estimated T.C.V: 259,417

(16) Porches/Decks

Area	Type
108	CPP
240	WSEP (1 Story)
402	Treated Wood
190	Treated Wood
42	Treated Wood

(17) Garage

Year Built:
Car Capacity:
Class:
Exterior:
Brick Ven.:
Stone Ven.:
Common Wall:
Foundation:
Finished ?:
Auto. Doors:
Mech. Doors:
Area:
% Good:
Storage Area:
No Conc. Floor:

Bsmnt Garage:

Carport Area:
Roof:

Cost Est. for Res. Bldg: 1 Single Family TWO STORY Cls C Blt 1985
(11) Heating System: Forced Air w/ Ducts
Ground Area = 1824 SF Floor Area = 2400 SF.
Phy/Ab.Phy/Func/Econ/Comb. % Good=66/100/100/100/66

Building Areas

Stories	Exterior	Foundation	Size	Cost New	Depr. Cost
1 Story	Siding	Blt-in Gar.	672		
1.5 Story	Siding	Crawl Space	1,152		
			Total:	257,900	170,214

Other Additions/Adjustments

Plumbing			
3 Fixture Bath	1	4,678	3,087
Water/Sewer			
1000 Gal Septic	1	4,899	3,233
Water Well, 100 Feet	1	5,849	3,860
Porches			
CPP	108	2,179	1,438
Foundation: Shallow	108	-963	-636
WSEP (1 Story)	240	11,767	7,766
Deck			
Treated Wood	402	6,589	4,349
Treated Wood	190	4,030	2,660
Treated Wood	42	1,649	1,088
Fireplaces			
Direct-Vented Gas	1	3,043	2,008
Lump Sum Items			
CONC BLOCK SHED		466	308
WTD BRIDGE 59 X 4		966	638
	Totals:	303,052	200,013

Notes:

ECF (RESIDENTIAL) 1.297 => TCV: 259,417

*** Information herein deemed reliable but not guaranteed***

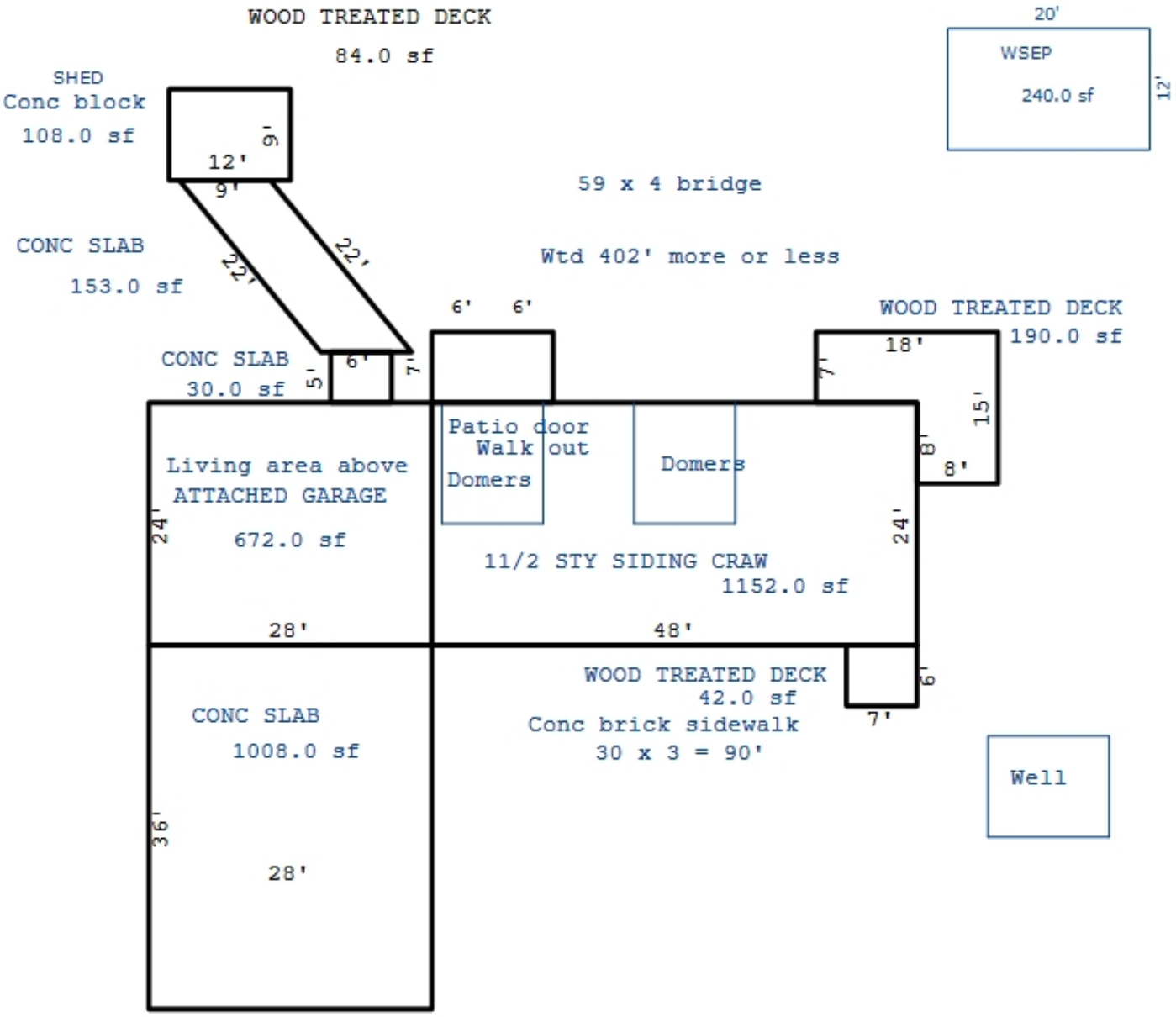

*** Information herein deemed reliable but not guaranteed***

Parcel Number: 2410-15-4404 Jurisdiction: GREENWOOD TWP County: WEXFORD Printed on 02/15/2024

Grantor	Grantee	Sale Price	Sale Date	Inst. Type	Terms of Sale	Liber & Page	Verified By	Prcnt. Trans.
ALLEN FAMILY SPECIAL NEEDS	BALDYGA, CASEY	5,000	01/30/2017	WD	03-ARM'S LENGTH	6791/004	DEED	100.0
ALLEN, BARBARA J LE	ALLEN, CHAD W	0	02/07/2008	QC	09-FAMILY	611/62	DEED	100.0
ALLEN, CHAD W	ALLEN FAMILY SPECIAL NEEDS	0	02/07/2008	QC	09-FAMILY	611/629	DEED	100.0
ALLEN, BARBARA J	ALLEN, BARBARA J LE & CHAI	0	04/19/2007	QC	09-FAMILY	600/2295	DEED	0.0

Property Address

Owner's Name/Address

BALDYGA, CASEY
2698 HAMMOND RD
TRAVERSE CITY MI 49686

Tax Description

A PAR COM AT SE COR OF SEC. 15: N 15 RDS; W 380.25 FT; S 15 RDS; E 380.25 FT TO BEG. TOG WITH EASEMT --2.16 A M/L-- GW. SEC. 15 T24N R10W - MANTON COMBINED 3-8-10 W/2410-15-4405

Comments/Influences

The Equalizer. Copyright (c) 1999 - 2009. Licensed To: Township of Greenwood, County of Wexford, Michigan

Class: RESIDENTIAL-VACANT Zoning:

School: MANTON CONSOLIDATED SCHOOLS

P.R.E. 0%

:

2024 Est TCV 14,402

Building Permit(s)	Date	Number	Status

	Improved	X	Vacant

	Public Improvements
	Dirt Road
	Gravel Road
X	Paved Road
	Storm Sewer
	Sidewalk
	Water
	Sewer
X	Electric
	Gas
	Curb
	Street Lights
	Standard Utilities
	Underground Utils.

	Topography of Site
X	Level
X	Rolling
X	Low
	High
	Landscaped
	Swamp
	Wooded
	Pond
	Waterfront
	Ravine
	Wetland
	Flood Plain
X	OPEN

Who	When	What
GLA	05/03/2016	INSPECTION

Land Value Estimates for Land Table 4010.LAND VALUES

Description	Frontage	Depth	* Factors * Front	Depth	Rate	%Adj.	Reason	Value
	247.50	380.25	1.0000	0.0000	0	100*		0
ACREAGE			1.690 Acres		8,522	100		14,402
ROW			0.470 Acres		0	100		0

* denotes lines that do not contribute to the total acreage calculation.

248 Actual Front Feet, 2.16 Total Acres Total Est. Land Value = 14,402

Year	Land Value	Building Value	Assessed Value	Board of Review	Tribunal/ Other	Taxable Value
2024	7,200	0	7,200			4,387C
2023	4,900	0	4,900			4,179C
2022	4,000	0	4,000			3,980C
2021	4,600	0	4,600			3,853C

*** Information herein deemed reliable but not guaranteed***

Parcel Number: 2410-16-1101 Jurisdiction: GREENWOOD TWP County: WEXFORD Printed on 02/15/2024

Grantor	Grantee	Sale Price	Sale Date	Inst. Type	Terms of Sale	Liber & Page	Verified By	Prcnt. Trans.
FARLAND, JOHN E.	BURNSIDE, MICHAEL & JANE	44,700	10/09/1996	WD	03-ARM'S LENGTH	351:786	DEED	0.0

Property Address

9915 N 31 RD

Owner's Name/Address

BURNSIDE, MICHAEL B.
& JANE M.
9915 N 31 RD
MANTON MI 49663

Tax Description

N 1/2 OF NE 1/4 OF NE 1/4 GW. SEC. 16 T24N R10W - MANTON 20 A.

Comments/Influences

Class: RESIDENTIAL-IMPROV Zoning:

School: MANTON CONSOLIDATED SCHOOLS

P.R.E. 100% / /

:

2024 Est TCV 311,779 TCV/TFA: 146.38

Building Permit(s)	Date	Number	Status
RESIDENTIAL - REMODEL	06/19/2007	PB13572	

X Improved | Vacant

	Public Improvements
	Dirt Road
	Gravel Road
X	Paved Road
	Storm Sewer
	Sidewalk
	Water
	Sewer
X	Electric
	Gas
	Curb
	Street Lights
	Standard Utilities
	Underground Utils.

	Topography of Site
X	Level
X	Rolling
	Low
	High
	Landscaped
	Swamp
X	Wooded
	Pond
	Waterfront
	Ravine
	Wetland
	Flood Plain
X	OPEN

Who	When	What
GLA	05/30/2017	INSPECTION
GLA	05/03/2016	INSPECTION

The Equalizer. Copyright (c) 1999 - 2009.
Licensed To: Township of Greenwood, County of Wexford, Michigan

Land Value Estimates for Land Table 4010.LAND VALUES

Description	Frontage	Depth	* Factors * Front	Depth	Rate	%Adj.	Reason	Value
ACREAGE			19.500 Acres		3,200	100		62,400
ROW			0.500 Acres		0	100		0
			20.00 Total Acres		Total Est. Land Value =			62,400

Land Improvement Cost Estimates

Description	Rate	Size	% Good	Cash Value
Wood Frame	25.82	100	44	1,136
Wood Frame	26.44	96	44	1,117
Total Estimated Land Improvements True Cash Value =				2,253

Year	Land Value	Building Value	Assessed Value	Board of Review	Tribunal/ Other	Taxable Value
2024	31,200	124,700	155,900			88,804C
2023	25,400	102,300	127,700			84,576C
2022	21,500	86,900	108,400			80,549C
2021	19,800	88,200	108,000			77,976C

*** Information herein deemed reliable but not guaranteed***

Building Type

X	Single Family
	Mobile Home
	Town Home
	Duplex
	A-Frame
X	Wood Frame

Building Style: PLAIN

Yr Built	Remodeled
1979	0

Condition: Good

Room List

	Basement
	1st Floor
	2nd Floor
	Bedrooms

(1) Exterior

X	Wood/Shingle
	Aluminum/Vinyl
	Brick
X	Insulation

(2) Windows

	Many		Large
X	Avg.	X	Avg.
	Few		Small

X	Wood Sash
	Metal Sash
	Vinyl Sash
	Double Hung
	Horiz. Slide
	Casement
	Double Glass
	Patio Doors
X	Storms & Screens

(3) Roof

X	Gable		Gambrel
	Hip		Mansard
	Flat		Shed

X	Asphalt Shingle

Chimney:

(3) Roof (cont.)

	Eavestrough
X	Insulation
0	Front Overhang
0	Other Overhang

(4) Interior

X	Drywall		Plaster
	Paneled		Wood T&G

Trim & Decoration

	Ex	X	Ord		Min

Size of Closets

	Lg	X	Ord		Small

Doors:		Solid	X	H.C.	

(5) Floors

Kitchen:
Other: Linoleum
Other: Carpeted

(6) Ceilings

X	Drywall

(7) Excavation

Basement: 936 S.F.
Crawl: 768 S.F.
Slab: 0 S.F.
Height to Joists: 0.0

(8) Basement

	Conc. Block
	Poured Conc.
	Stone
	Treated Wood
	Concrete Floor

(9) Basement Finish

	Recreation	SF
	Living	SF
1	Walkout Doors (B)	
	No Floor	SF
	Walkout Doors (A)	

(10) Floor Support

Joists:
Unsupported Len:
Cntr.Sup:

(11) Heating/Cooling

X	Gas		Oil		Elec.
	Wood		Coal		Steam

	Forced Air w/o Ducts
X	Forced Air w/ Ducts
	Forced Hot Water
	Electric Baseboard
	Elec. Ceil. Radiant
	Radiant (in-floor)
	Electric Wall Heat
	Space Heater
	Wall/Floor Furnace
	Forced Heat & Cool
	Heat Pump
	No Heating/Cooling

	Central Air
	Wood Furnace

(12) Electric

150	Amps Service

No./Qual. of Fixtures

	Ex.	X	Ord.		Min

No. of Elec. Outlets

	Many	X	Ave.		Few

(13) Plumbing

	Average Fixture(s)
2	3 Fixture Bath
	2 Fixture Bath
	Softener, Auto
	Softener, Manual
	Solar Water Heat
	No Plumbing
	Extra Toilet
	Extra Sink
	Separate Shower
	Ceramic Tile Floor
	Ceramic Tile Wains
	Ceramic Tub Alcove
	Vent Fan

(14) Water/Sewer

	Public Water
	Public Sewer
2	Water Well
2	1000 Gal Septic
	2000 Gal Septic

Lump Sum Items:

(15) Built-ins

	Appliance Allow.
	Cook Top
	Dishwasher
	Garbage Disposal
	Bath Heater
	Vent Fan
	Hot Tub
	Unvented Hood
	Vented Hood
	Intercom
	Jacuzzi Tub
	Jacuzzi repl.Tub
	Oven
	Microwave
	Standard Range
	Self Clean Range
	Sauna
	Trash Compactor
	Central Vacuum
	Security System

(15) Fireplaces

	Interior 1 Story
	Interior 2 Story
	2nd/Same Stack
	Two Sided
	Exterior 1 Story
	Exterior 2 Story
	Prefab 1 Story
	Prefab 2 Story
	Heat Circulator
	Raised Hearth
	Wood Stove
	Direct-Vented Gas

Class: CD
Effec. Age: 44
Floor Area: 2,130
Total Base New : 321,802 E.C.F.
Total Depr Cost: 190,537 X 1.297
Estimated T.C.V: 247,126

(16) Porches/Decks

Area	Type
244	WPP
258	WCP (1 Story)
351	Treated Wood

(17) Garage

Year Built:
Car Capacity:
Class: CD
Exterior: Siding
Brick Ven.: 0
Stone Ven.: 0
Common Wall: Detache
Foundation: 42 Inch
Finished ?:
Auto. Doors: 0
Mech. Doors: 0
Area: 1200
% Good: 83
Storage Area: 0
No Conc. Floor: 0

Bsmnt Garage:

Carport Area:
Roof:

Cost Est. for Res. Bldg: 1 Single Family PLAIN Cls CD Blt 1979
(11) Heating System: Forced Air w/ Ducts
Ground Area = 1704 SF Floor Area = 2130 SF.
Phy/Ab.Phy/Func/Econ/Comb. % Good=56/100/100/100/56
Building Areas

Stories	Exterior	Foundation	Size	Cost New	Depr. Cost
1.25 Story	Siding	Crawl Space	768		
1.25 Story	Siding	Basement	936		
			Total:	231,948	129,891

Other Additions/Adjustments

Basement, Outside Entrance, Below Grade	1	2,176	1,219
Plumbing			
3 Fixture Bath	1	3,887	2,177
Water/Sewer			
1000 Gal Septic	2	9,164	5,132
Water Well, 100 Feet	2	11,360	6,362
Porches			
WPP	244	4,397	2,462
WCP (1 Story)	258	8,341	4,671
Deck			
Treated Wood	351	5,893	3,300
Garages			
Class: CD Exterior: Siding Foundation: 42 Inch (Unfinished)			
Base Cost	1200	38,700	32,121 *8
Local Cost Items			
SHED #3	120	936	402 *4
OUTSIDE FURNACE	1	5,000	2,800
	Totals:	321,802	190,537

Notes:
ECF (RESIDENTIAL) 1.297 => TCV: 247,126

*** Information herein deemed reliable but not guaranteed***

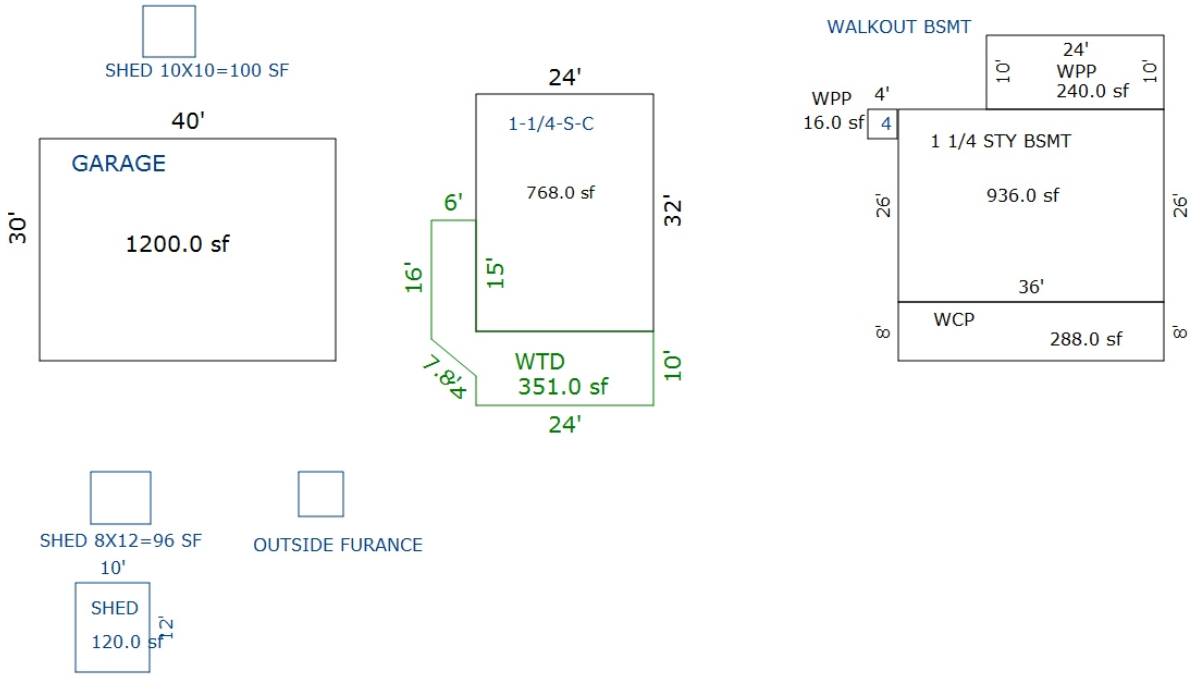

Sketch by Apex Sketch

*** Information herein deemed reliable but not guaranteed***

Parcel Number: 2410-16-1102 Jurisdiction: GREENWOOD TWP County: WEXFORD Printed on 02/15/2024

Grantor	Grantee	Sale Price	Sale Date	Inst. Type	Terms of Sale	Liber & Page	Verified By	Prcnt. Trans.
HARRIS, JAY R.	MACINKOWICZ-HARRIS, ANN MA	1	11/14/2016	QC	09-FAMILY	678 /2739	DEED	0.0

Property Address	Class: RESIDENTIAL-VACANT	Zoning:	Building Permit(s)	Date	Number	Status
9815 N 31 RD	School: MANTON CONSOLIDATED SCHOOLS					
	P.R.E. 0%					
Owner's Name/Address	:					
MACINKOWICZ-HARRIS, ANN MARIE TRUST 16098 RIVERSIDE LIVONIA MI 48154	2024 Est TCV 62,400					

	Improved	X	Vacant

	Public Improvements
	Dirt Road
	Gravel Road
X	Paved Road
	Storm Sewer
	Sidewalk
	Water
	Sewer
X	Electric
	Gas
	Curb
	Street Lights
	Standard Utilities
	Underground Utils.

	Topography of Site
X	Level
X	Rolling
	Low
	High
	Landscaped
	Swamp
X	Wooded
	Pond
	Waterfront
	Ravine
	Wetland
	Flood Plain
X	OPEN

Who	When	What
GLA	05/30/2017	INSPECTION

Tax Description

S 1/2 OF NE 1/4 OF NE 1/4 GW. SEC. 16 T24N R10W - MANTON 20 A.

Comments/Influences

The Equalizer. Copyright (c) 1999 - 2009. Licensed To: Township of Greenwood, County of Wexford, Michigan

Land Value Estimates for Land Table 4010.LAND VALUES

Description	Frontage	Depth	* Factors * Front	Depth	Rate	%Adj.	Reason	Value
ACREAGE			19.500 Acres		3,200	100		62,400
ROW			0.500 Acres		0	100		0
			20.00 Total Acres		Total Est. Land Value =			62,400

Year	Land Value	Building Value	Assessed Value	Board of Review	Tribunal/ Other	Taxable Value
2024	31,200	0	31,200			15,802C
2023	25,400	0	25,400			15,050C
2022	21,500	0	21,500			14,334C
2021	19,800	0	19,800			13,877C

*** Information herein deemed reliable but not guaranteed***

Parcel Number: 2410-16-1201 Jurisdiction: GREENWOOD TWP County: WEXFORD Printed on 02/15/2024

Grantor	Grantee	Sale Price	Sale Date	Inst. Type	Terms of Sale	Liber & Page	Verified By	Prcnt. Trans.
HARRIS, JAY R.	ANN MARIE MACINKOWICZ-HARR	1	11/16/2016	QC	09-FAMILY	678 / 273	DEED	0.0

Property Address

Owner's Name/Address

ANN MARIE MACINKOWICZ-HARRIS TRUST
16098 RIVERSIDE ST
LIVONIA MI 48154

Tax Description

NW 1/4 OF NE 1/4 GW. SEC. 16 T24N R10W - MANTON 40 A.

Comments/Influences

Class: RESIDENTIAL-VACANT Zoning:

School: MANTON CONSOLIDATED SCHOOLS

P.R.E. 0%

:

2024 Est TCV 106,158

Building Permit(s)	Date	Number	Status

	Improved	X	Vacant

	Public Improvements
X	Dirt Road
	Gravel Road
X	Paved Road
	Storm Sewer
	Sidewalk
	Water
	Sewer
X	Electric
	Gas
	Curb
	Street Lights
	Standard Utilities
	Underground Utils.

	Topography of Site
X	Level
X	Rolling
	Low
	High
	Landscaped
	Swamp
X	Wooded
	Pond
	Waterfront
	Ravine
	Wetland
	Flood Plain
X	OPEN

Who	When	What
GLA	05/30/2017	INSPECTION
GLA	05/03/2016	INSPECTION

Land Value Estimates for Land Table 4010.LAND VALUES

Description	Frontage	Depth	* Factors * Front	Depth	Rate	%Adj.	Reason	Value
ACREAGE			39.000 Acres		2,722	100		106,158
ROW			1.000 Acres		0	100		0
			40.00 Total Acres		Total Est. Land Value =			106,158

Year	Land Value	Building Value	Assessed Value	Board of Review	Tribunal/ Other	Taxable Value
2024	53,100	0	53,100			12,713C
2023	47,000	0	47,000			12,108C
2022	37,400	0	37,400			11,532C
2021	33,300	0	33,300			11,164C

The Equalizer. Copyright (c) 1999 - 2009.
Licensed To: Township of Greenwood, County of Wexford, Michigan

*** Information herein deemed reliable but not guaranteed***

Parcel Number: 2410-16-1301 Jurisdiction: GREENWOOD TWP County: WEXFORD Printed on 02/15/2024

Grantor	Grantee	Sale Price	Sale Date	Inst. Type	Terms of Sale	Liber & Page	Verified By	Prcnt. Trans.

Property Address

Owner's Name/Address

STATE OF MICHIGAN
P O BOX 30735
GRANTS ADMINISTRATION
LANSING MI 48909-8235

Tax Description

S 1/2 OF NE 1/4; SE 1/4 OF SW 1/4; W 1/2 OF SE 1/4; E 1/2 OF SE 1/4 EXC E 192 FT. OF S 213 FT & EXC W 20 RDS OF S 16 RDS. - 277 A. GW. SEC. 16 T24N R10W - MANTON

Comments/Influences

The Equalizer. Copyright (c) 1999 - 2009. Licensed To: Township of Greenwood, County of Wexford, Michigan

Class: AGRICULTURAL-VACAN Zoning:

School: MANTON CONSOLIDATED SCHOOLS

P.R.E. 0%

:

2024 Est TCV 0

Building Permit(s)	Date	Number	Status

	Improved	X	Vacant

	Public Improvements
	Dirt Road
	Gravel Road
X	Paved Road
	Storm Sewer
	Sidewalk
	Water
	Sewer
X	Electric
	Gas
	Curb
	Street Lights
	Standard Utilities
	Underground Utils.

	Topography of Site
X	Level
X	Rolling
	Low
	High
	Landscaped
	Swamp
X	Wooded
	Pond
	Waterfront
	Ravine
	Wetland
	Flood Plain
X	OPEN

Who	When	What
GLA	05/30/2017	INSPECTION
GLA	05/03/2016	INSPECTION

Land Value Estimates for Land Table 4010.LAND VALUES

Description	Frontage	Depth	* Factors * Front	Depth	Rate	%Adj.	Reason	Value
ACREAGE			272.350 Acres		2,480	100		675,428
			4.650 Acres		0	100		0
			277.00 Total Acres		Total Est. Land Value =			675,428

Year	Land Value	Building Value	Assessed Value	Board of Review	Tribunal/ Other	Taxable Value
2024	EXEMPT	EXEMPT	EXEMPT			EXEMPT
2023	EXEMPT	EXEMPT	EXEMPT			EXEMPT
2022	0	0	0			0
2021	0	0	0			0

*** Information herein deemed reliable but not guaranteed***

Parcel Number: 2410-16-2101 Jurisdiction: GREENWOOD TWP County: WEXFORD Printed on 02/15/2024

Grantor	Grantee	Sale Price	Sale Date	Inst. Type	Terms of Sale	Liber & Page	Verified By	Prcnt. Trans.

Property Address	Class: AGRICULTURAL-VACAN	Zoning:	Building Permit(s)	Date	Number	Status
	School: MANTON CONSOLIDATED SCHOOLS					
Owner's Name/Address	P.R.E. 100% / /					
	:					
MICHIGAN DEPT OF P O BOX 30735 GRANTS ADMINISTRATION LANSING MI 48909-8235	2024 Est TCV 595,200					

Tax Description

NW 1/4 AND N 1/2 OF SW 1/4 GW. SEC. 16 T24N R10W - MANTON 240 A. SEE ACT 513 ROLL FOR VALUE

Comments/Influences

The Equalizer. Copyright (c) 1999 - 2009. Licensed To: Township of Greenwood, County of Wexford, Michigan

	Improved	X	Vacant

	Public Improvements
	Dirt Road
	Gravel Road
X	Paved Road
	Storm Sewer
	Sidewalk
	Water
	Sewer
X	Electric
	Gas
	Curb
	Street Lights
	Standard Utilities
	Underground Utils.

	Topography of Site
X	Level
X	Rolling
	Low
	High
	Landscaped
	Swamp
X	Wooded
	Pond
	Waterfront
	Ravine
	Wetland
	Flood Plain
X	OPEN

Who	When	What
GLA	05/30/2017	INSPECTION
GLA	05/03/2016	INSPECTION

Land Value Estimates for Land Table 4010.LAND VALUES

Description	Frontage	Depth	* Factors * Front	Depth	Rate	%Adj.	Reason	Value
ACREAGE			240.000	Acres	2,480	100		595,200
			240.00	Total Acres			Total Est. Land Value =	595,200

Year	Land Value	Building Value	Assessed Value	Board of Review	Tribunal/ Other	Taxable Value
2024	297,600	0	297,600			90,519C
2023	228,000	0	228,000			86,209C
2022	204,000	0	204,000			82,104C
2021	180,000	0	180,000			79,482C

*** Information herein deemed reliable but not guaranteed***

Parcel Number: 2410-16-3301 Jurisdiction: GREENWOOD TWP County: WEXFORD Printed on 02/15/2024

Grantor	Grantee	Sale Price	Sale Date	Inst. Type	Terms of Sale	Liber & Page	Verified By	Prcnt. Trans.
FRIDLINE, DONALD E.	FRIDLINE, DONALD E TRUST	0	07/25/2006	WD	09-FAMILY	590/2117	DEED	0.0

Property Address

2211 E 8 RD

Owner's Name/Address

FRIDLINE, DONALD E.
TRUST
9190 LAKE RIDGE DR
CLARKSTON MI 48348

Tax Description

SW 1/4 OF SW 1/4 INC ASSESSMENT OF 17-4401 GW. SEC. 16 T24N R10W - MANTON 40 A.

Comments/Influences

Class: RESIDENTIAL-IMPROV Zoning:

School: MANTON CONSOLIDATED SCHOOLS

P.R.E. 100% 01/26/2016 Qual. Fr. PA 42

:

2024 Est TCV 367,604 TCV/TFA: 221.98

Building Permit(s)	Date	Number	Status
RESIDENTIAL - REMODEL	09/29/2004	PM7958	
RESIDENTIAL - NEW	08/13/2003	PE15556	
RESIDENTIAL - REMODEL	07/23/2003	PB11724	
RESIDENTIAL - REMODEL	02/04/2002	PM5710	

X Improved | Vacant

	Public Improvements
	Dirt Road
	Gravel Road
X	Paved Road
	Storm Sewer
	Sidewalk
	Water
	Sewer
X	Electric
	Gas
	Curb
	Street Lights
	Standard Utilities
	Underground Utils.

	Topography of Site
X	Level
X	Rolling
	Low
	High
	Landscaped
	Swamp
X	Wooded
	Pond
	Waterfront
	Ravine
	Wetland
	Flood Plain
X	OPEN

Who	When	What
GLA	05/30/2017	INSPECTION
GGL	05/03/2016	INSPECTION

Land Value Estimates for Land Table 4010.LAND VALUES

Description	Frontage	Depth	* Factors * Front	Depth	Rate	%Adj.	Reason	Value
ACREAGE			80.000 Acres		2,541	100		203,240
			80.00 Total Acres		Total Est. Land Value =			203,240

Land Improvement Cost Estimates

Description	Rate	Size	% Good	Cash Value
D/W/P: 4in Concrete	7.01	1080	65	4,921
Wood Frame	28.53	112	44	1,406
Total Estimated Land Improvements True Cash Value =				6,327

Year	Land Value	Building Value	Assessed Value	Board of Review	Tribunal/ Other	Taxable Value
2024	101,600	82,200	183,800			102,598C
2023	85,600	67,800	153,400			97,713C
2022	68,000	57,700	125,700			93,060C
2021	62,000	58,500	120,500			90,088C

The Equalizer. Copyright (c) 1999 - 2009.
Licensed To: Township of Greenwood, County of Wexford, Michigan

*** Information herein deemed reliable but not guaranteed***

Building Type

X	Single Family
	Mobile Home
	Town Home
	Duplex
	A-Frame
X	Wood Frame

Building Style: PLAIN

Yr Built	Remodeled
1975	0

Condition: Good

Room List

	Basement
	1st Floor
	2nd Floor
	Bedrooms

(1) Exterior

X	Wood/Shingle
	Aluminum/Vinyl
	Brick
X	Insulation

(2) Windows

	Many		Large
X	Avg.	X	Avg.
	Few		Small

X	Wood Sash
	Metal Sash
	Vinyl Sash
	Double Hung
	Horiz. Slide
	Casement
	Double Glass
	Patio Doors
X	Storms & Screens

(3) Roof

X	Gable		Gambrel
	Hip		Mansard
	Flat		Shed

X	Asphalt Shingle

Chimney:

(3) Roof (cont.)

	Eavestrough
X	Insulation
0	Front Overhang
0	Other Overhang

(4) Interior

X	Drywall		Plaster
	Paneled		Wood T&G

Trim & Decoration

	Ex	X	Ord		Min

Size of Closets

	Lg	X	Ord		Small

Doors:		Solid	X	H.C.	

(5) Floors

Kitchen:
Other: Linoleum
Other: Carpeted

(6) Ceilings

X	Drywall

(7) Excavation

Basement: 0 S.F.
Crawl: 1656 S.F.
Slab: 0 S.F.
Height to Joists: 0.0

(8) Basement

	Conc. Block
	Poured Conc.
	Stone
	Treated Wood
	Concrete Floor

(9) Basement Finish

	Recreation SF
	Living SF
	Walkout Doors (B)
	No Floor SF
	Walkout Doors (A)

(10) Floor Support

Joists:
Unsupported Len:
Cntr.Sup:

(11) Heating/Cooling

X	Gas		Oil		Elec.
	Wood		Coal		Steam

	Forced Air w/o Ducts
X	Forced Air w/ Ducts
	Forced Hot Water
	Electric Baseboard
	Elec. Ceil. Radiant
	Radiant (in-floor)
	Electric Wall Heat
	Space Heater
	Wall/Floor Furnace
	Forced Heat & Cool
	Heat Pump
	No Heating/Cooling

	Central Air
	Wood Furnace

(12) Electric

150	Amps Service

No./Qual. of Fixtures

	Ex.	X	Ord.		Min

No. of Elec. Outlets

	Many	X	Ave.		Few

(13) Plumbing

	Average Fixture(s)
1	3 Fixture Bath
	2 Fixture Bath
	Softener, Auto
	Softener, Manual
	Solar Water Heat
	No Plumbing
	Extra Toilet
	Extra Sink
	Separate Shower
	Ceramic Tile Floor
	Ceramic Tile Wains
	Ceramic Tub Alcove
	Vent Fan

(14) Water/Sewer

	Public Water
	Public Sewer
1	Water Well
1	1000 Gal Septic
	2000 Gal Septic

Lump Sum Items:

(15) Built-ins

	Appliance Allow.
	Cook Top
	Dishwasher
	Garbage Disposal
	Bath Heater
	Vent Fan
	Hot Tub
	Unvented Hood
	Vented Hood
	Intercom
	Jacuzzi Tub
	Jacuzzi repl.Tub
	Oven
	Microwave
	Standard Range
	Self Clean Range
	Sauna
	Trash Compactor
	Central Vacuum
	Security System

(15) Fireplaces

	Interior 1 Story
	Interior 2 Story
	2nd/Same Stack
	Two Sided
	Exterior 1 Story
	Exterior 2 Story
	Prefab 1 Story
	Prefab 2 Story
	Heat Circulator
	Raised Hearth
	Wood Stove
	Direct-Vented Gas

Class: CD
Effec. Age: 48
Floor Area: 1,656
Total Base New : 234,320 E.C.F.
Total Depr Cost: 121,848 X 1.297
Estimated T.C.V: 158,037

(16) Porches/Decks

Area	Type
128	WCP (1 Story)

(17) Garage

Year Built:
Car Capacity:
Class: CD
Exterior: Siding
Brick Ven.: 0
Stone Ven.: 0
Common Wall: 1 Wall
Foundation: 42 Inch
Finished ?:
Auto. Doors: 0
Mech. Doors: 0
Area: 576
% Good: 0
Storage Area: 0
No Conc. Floor: 0

Bsmnt Garage:

Carport Area:
Roof:

Cost Est. for Res. Bldg: 1 Single Family PLAIN Cls CD Blt 1975
(11) Heating System: Forced Air w/ Ducts
Ground Area = 1656 SF Floor Area = 1656 SF.
Phy/Ab.Phy/Func/Econ/Comb. % Good=52/100/100/100/52
Building Areas

Stories	Exterior	Foundation	Size	Cost New	Depr. Cost
1 Story	Siding	Crawl Space	1,656		
			Total:	183,439	95,389
Other Additions/Adjustments					
Water/Sewer					
1000 Gal Septic			1	4,582	2,383
Water Well, 100 Feet			1	5,680	2,954
Porches					
WCP (1 Story)			128	5,275	2,743
Garages					
Class: CD Exterior: Siding Foundation: 42 Inch (Unfinished)					
Base Cost			576	22,401	11,649
Common Wall: 1 Wall			1	-2,529	-1,315
Class: CD Exterior: Siding Foundation: 18 Inch (Unfinished)					
Base Cost			400	15,472	8,045
			Totals:	234,320	121,848

Notes:
ECF (RESIDENTIAL) 1.297 => TCV: 158,037

*** Information herein deemed reliable but not guaranteed***

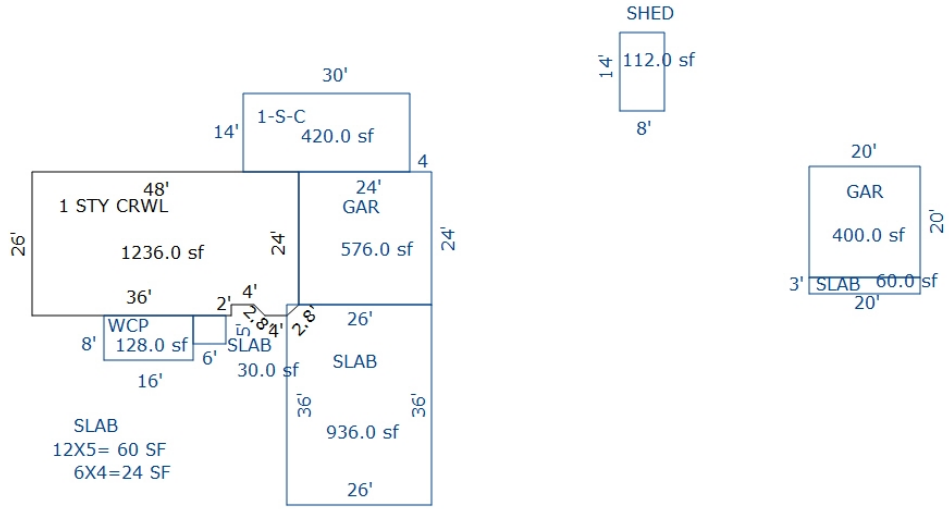

Sketch by Apex Sketch

*** Information herein deemed reliable but not guaranteed***

Parcel Number: 2410-16-4401 Jurisdiction: GREENWOOD TWP County: WEXFORD Printed on 02/15/2024

Grantor	Grantee	Sale Price	Sale Date	Inst. Type	Terms of Sale	Liber & Page	Verified By	Prcnt. Trans.
RAULIN, RICHARD C.	MATTSON, CHARLES & VICKI	48,000	08/08/1997	WD	03-ARM'S LENGTH	356:439	DEED	0.0
MERRILL, WILLIAM M.	RAULIN, RICHARD & RUTH	39,900	06/10/1996	WD	03-ARM'S LENGTH	349:802	DEED	0.0

Property Address

2761 E 8 RD

Owner's Name/Address

MATTSON, CHARLES L.
& VICKI L.
626 QUEENSWAY
CANTON MI 48188

Tax Description

W 20 RDS OF S 16 RDS OF E 1/2 OF SE 1/4 GW. SEC. 16 T24N R10W - MANTON 2 A.

Comments/Influences

The Equalizer. Copyright (c) 1999 - 2009. Licensed To: Township of Greenwood, County of Wexford, Michigan

Class: RESIDENTIAL-IMPROV Zoning:

School: MANTON CONSOLIDATED SCHOOLS

P.R.E. 0%

:

2024 Est TCV 72,985 TCV/TFA: 78.99

Building Permit(s)	Date	Number	Status

X Improved | Vacant

	Public Improvements
	Dirt Road
	Gravel Road
X	Paved Road
	Storm Sewer
	Sidewalk
	Water
	Sewer
X	Electric
	Gas
	Curb
	Street Lights
	Standard Utilities
	Underground Utils.

	Topography of Site
X	Level
X	Rolling
	Low
	High
	Landscaped
	Swamp
X	Wooded
	Pond
	Waterfront
	Ravine
	Wetland
	Flood Plain
X	OPEN

Who	When	What
GLA	05/30/2017	INSPECTION
GLA	05/03/2016	INSPECTION

Land Value Estimates for Land Table 4010.LAND VALUES

Description	Frontage	Depth	* Factors * Front	Depth	Rate	%Adj.	Reason	Value
ACREAGE			1.750 Acres		7,863	100		13,761
ROW			0.250 Acres		0	100		0
			2.00 Total Acres		Total Est. Land Value =			13,761

Land Improvement Cost Estimates

Description	Rate	Size	% Good	Cash Value
D/W/P: 4in Concrete	7.01	201	45	634
Wood Frame	35.33	64	44	995
Total Estimated Land Improvements True Cash Value =				1,629

Year	Land Value	Building Value	Assessed Value	Board of Review	Tribunal/ Other	Taxable Value
2024	6,900	29,600	36,500			18,339C
2023	5,000	24,000	29,000			17,466C
2022	4,100	20,000	24,100			16,635C
2021	4,700	17,200	21,900			16,104C

*** Information herein deemed reliable but not guaranteed***

Building Type

	Single Family
X	Mobile Home
	Town Home
	Duplex
	A-Frame

X	Wood Frame

Building Style: SWT/DWT

Yr Built	Remodeled
0	0

Condition: Fair

Room List

	Basement
	1st Floor
	2nd Floor
	Bedrooms

(1) Exterior

	Wood/Shingle
X	Aluminum/Vinyl
	Brick
X	Insulation

(2) Windows

	Many		Large
X	Avg.	X	Avg.
	Few		Small

	Wood Sash
	Metal Sash
X	Vinyl Sash
	Double Hung
	Horiz. Slide
	Casement
	Double Glass
	Patio Doors
X	Storms & Screens

(3) Roof

X	Gable		Gambrel
	Hip		Mansard
	Flat		Shed

X	Asphalt Shingle

Chimney:

(3) Roof (cont.)

	Eavestrough
X	Insulation
0	Front Overhang
0	Other Overhang

(4) Interior

X	Drywall		Plaster
	Paneled		Wood T&G

Trim & Decoration

	Ex	X	Ord		Min

Size of Closets

	Lg	X	Ord		Small

Doors:		Solid	X	H.C.	

(5) Floors

Kitchen:
Other: Linoleum
Other: Carpeted

(6) Ceilings

X	Drywall		

(7) Excavation

Basement: 0 S.F.
Crawl: 0 S.F.
Slab: 0 S.F.
Height to Joists: 0.0

(8) Basement

	Conc. Block
	Poured Conc.
	Stone
	Treated Wood
	Concrete Floor

(9) Basement Finish

	Recreation SF
	Living SF
	Walkout Doors (B)
	No Floor SF
	Walkout Doors (A)

(10) Floor Support

Joists:
Unsupported Len:
Cntr.Sup:

(11) Heating/Cooling

X	Gas		Oil		Elec.
	Wood		Coal		Steam

X	Forced Warm Air
	Wall Furnace
	Warm & Cool Air
	Heat Pump

	Central Air
	Wood Furnace

(12) Electric

150	Amps Service

No./Qual. of Fixtures

	Ex.	X	Ord.		Min

No. of Elec. Outlets

	Many	X	Ave.		Few

(13) Plumbing

	Average Fixture(s)
1	3 Fixture Bath
	2 Fixture Bath
	Softener, Auto
	Softener, Manual
	Solar Water Heat
	No Plumbing
	Extra Toilet
	Extra Sink
	Separate Shower
	Ceramic Tile Floor
	Ceramic Tile Wains
	Ceramic Tub Alcove
	Vent Fan

(14) Water/Sewer

	Public Water
	Public Sewer
1	Water Well
1	1000 Gal Septic
	2000 Gal Septic

Lump Sum Items:

(15) Built-ins

	Appliance Allow.
	Cook Top
	Dishwasher
	Garbage Disposal
	Bath Heater
	Vent Fan
	Hot Tub
	Unvented Hood
	Vented Hood
	Intercom
	Jacuzzi Tub
	Jacuzzi repl.Tub
	Oven
	Microwave
	Standard Range
	Self Clean Range
	Sauna
	Trash Compactor
	Central Vacuum
	Security System

(15) Fireplaces

	Interior 1 Story
	Interior 2 Story
	2nd/Same Stack
	Two Sided
	Exterior 1 Story
	Exterior 2 Story
	Prefab 1 Story
	Prefab 2 Story
	Heat Circulator
	Raised Hearth
	Wood Stove
	Direct-Vented Gas

Class: Average
Effec. Age: 24
Floor Area:
Total Base New : 94,481 E.C.F.
Total Depr Cost: 44,406 X 1.297
Estimated T.C.V: 57,595

(16) Porches/Decks

Area	Type
192	WSEP (1 Story)

(17) Garage

Year Built:
Car Capacity:
Class: CD
Exterior: Pole
Brick Ven.: 0
Stone Ven.: 0
Common Wall: Detache
Foundation: 18 Inch
Finished ?:
Auto. Doors: 0
Mech. Doors: 0
Area: 1200
% Good: 0
Storage Area: 0
No Conc. Floor: 1200

Bsmnt Garage:

Carport Area:
Roof:

Cost Est. for Res. Bldg: 1 Mobile Home SWT/DWT Cls Average Blt 0
(11) Heating System: Forced Warm Air
Ground Area = 924 SF Floor Area = 924 SF.
Phy/Ab.Phy/Func/Econ/Comb. % Good=47/100/100/100/47
Building Areas

Type	Ext. Walls	Roof/Fnd.	Size	Cost New	Depr. Cost
Main Home	Ribbed	Metal	924		
			Total:	56,707	26,652
Other Additions/Adjustments					
Skirting, Metal or Vinyl, Vertical			160	1,830	860
Water/Sewer					
1000 Gal Septic			1	4,899	2,303
Water Well, 100 Feet			1	5,849	2,749
Porches					
WSEP (1 Story)			192	6,476	3,044
Garages					
Class: CD Exterior: Pole (Unfinished)					
Base Cost			1200	26,100	12,267
No Concrete Floor			1200	-7,380	-3,469
			Totals:	94,481	44,406

Notes:
ECF (RESIDENTIAL) 1.297 => TCV: 57,595

*** Information herein deemed reliable but not guaranteed***

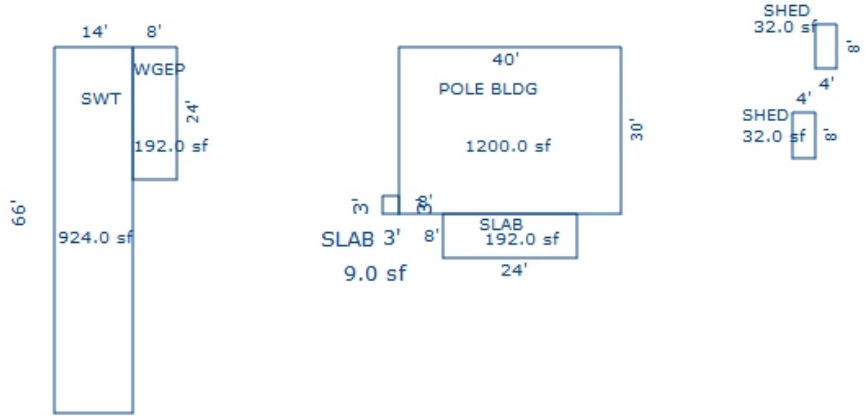

Sketch by Apex Sketch

*** Information herein deemed reliable but not guaranteed***

Parcel Number: 2410-16-4402 Jurisdiction: GREENWOOD TWP County: WEXFORD Printed on 02/15/2024

Grantor	Grantee	Sale Price	Sale Date	Inst. Type	Terms of Sale	Liber & Page	Verified By	Prcnt. Trans.
FEDERAL NATIONAL MORTGAGE	WEXFORD CO ROAD COMMISSION	20,000	08/28/2008	WD	19-MULTI PARCEL ARM'S LEN	614/1610	DEED	0.0
HUNTINGTON NATIONAL BANK	FEDERAL NATIONAL MORTGAGE	0	08/15/2007	QC	17-LENDING TO LENDING	604/65	DEED	0.0
WEHR, M. BRUCE & SARA	HUNTINGTON NATIONAL BANK	71,513	07/27/2007	SD	21-NOT USED/OTHER	603/398	DEED	0.0
YOUNG, MICHAEL & MARY JO	WEHR, M. BRUCE & SARA	36,000	08/16/1996	WD	03-ARM'S LENGTH	350:876	DEED	0.0

Property Address

2999 E 8 RD

Owner's Name/Address

WEXFORD CO ROAD COMMISSION
85 E M-115 HWY
CADILLAC MI 49601

Tax Description

E 192 FT OF S 213 FT OF SE 1/4 GW. SEC. 16 T24N R10W - MANTON 1 A. M/L

Comments/Influences

Class: COMMERCIAL-VACANT Zoning:

School: MANTON CONSOLIDATED SCHOOLS

P.R.E. 100% / /

:

2024 Est TCV 0

Building Permit(s)	Date	Number	Status

	Improved	X	Vacant

	Public Improvements
	Dirt Road
	Gravel Road
X	Paved Road
	Storm Sewer
	Sidewalk
	Water
	Sewer
X	Electric
	Gas
	Curb
	Street Lights
	Standard Utilities
	Underground Utils.

	Topography of Site
X	Level
X	Rolling
	Low
	High
	Landscaped
	Swamp
X	Wooded
	Pond
	Waterfront
	Ravine
	Wetland
	Flood Plain
X	OPEN

Who	When	What
GLA	05/30/2017	INSPECTION
GLA	05/03/2016	INSPECTION

Land Value Estimates for Land Table 4010.LAND VALUES

Description	Frontage	Depth	* Factors * Front	Depth	Rate	%Adj.	Reason	Value
ACREAGE			0.860 Acres		10,953	100		9,420
			0.140 Acres		0	100		0
			1.00 Total Acres		Total Est. Land Value =			9,420

Year	Land Value	Building Value	Assessed Value	Board of Review	Tribunal/ Other	Taxable Value
2024	EXEMPT	EXEMPT	EXEMPT			EXEMPT
2023	EXEMPT	EXEMPT	EXEMPT			EXEMPT
2022	0	0	0			0
2021	0	0	0			0

The Equalizer. Copyright (c) 1999 - 2009. Licensed To: Township of Greenwood, County of Wexford, Michigan

*** Information herein deemed reliable but not guaranteed***

Parcel Number: 2410-17-1101 Jurisdiction: GREENWOOD TWP County: WEXFORD Printed on 02/15/2024

Grantor	Grantee	Sale Price	Sale Date	Inst. Type	Terms of Sale	Liber & Page	Verified By	Prcnt. Trans.

Property Address	Class: AGRICULTURAL-VACAN	Zoning:	Building Permit(s)	Date	Number	Status
	School: MANTON CONSOLIDATED SCHOOLS					
Owner's Name/Address	P.R.E. 100% / /					
MICHIGAN DEPT OF P O BOX 30735 GRANTS ADMINISTRATION LANSING MI 48909-8235	:					
	2024 Est TCV 1,497,945					

Improved | X | Vacant

Public Improvements

Dirt Road
Gravel Road
Paved Road
Storm Sewer
Sidewalk
Water
Sewer
Electric
Gas
Curb
Street Lights
Standard Utilities
Underground Utils.

Topography of Site

Level
Rolling
Low
High
Landscaped
Swamp
Wooded
Pond
Waterfront
Ravine
Wetland
Flood Plain

Land Value Estimates for Land Table 4010.LAND VALUES

Description	Frontage	Depth	* Factors * Front	Depth	Rate	%Adj.	Reason	Value
ACREAGE			604.010 Acres		2,480	100		1,497,945
			604.01 Total Acres		Total Est. Land Value =			1,497,945

Tax Description

ENTIRE SECTION EXC SE 1/4 OF SE 1/4
604.01 A M/L GW. SEC. 17 T24N R10W
-MANTON- SEE ACT 513 ROLL FOR VALUE

Comments/Influences

Who	When	What
GLA	05/30/2017	INSPECTION

Year	Land Value	Building Value	Assessed Value	Board of Review	Tribunal/ Other	Taxable Value
2024	749,000	0	749,000			440,082C
2023	573,800	0	573,800			419,126C
2022	513,400	0	513,400			399,168C
2021	453,000	0	453,000			386,417C

The Equalizer. Copyright (c) 1999 - 2009.
Licensed To: Township of Greenwood, County of Wexford, Michigan

*** Information herein deemed reliable but not guaranteed***

Parcel Number: 2410-18-1101 Jurisdiction: GREENWOOD TWP County: WEXFORD Printed on 02/15/2024

Grantor	Grantee	Sale Price	Sale Date	Inst. Type	Terms of Sale	Liber & Page	Verified By	Prcnt. Trans.

Property Address	Class: AGRICULTURAL-VACAN	Zoning:	Building Permit(s)	Date	Number	Status
	School: KINGSLEY AREA SCHOOL					
Owner's Name/Address	P.R.E. 100% / /					
MICHIGAN DEPT OF P O BOX 30735 GRANTS ADMINISTRATION LANSING MI 48909-8235	:					
	2024 Est TCV 1,375,706					

Tax Description

ENTIRE FRL SEC. 18 EXC FRL NW 1/4 OF FRL NW 1/4 EXC PAR COM 2329.26 FT N OF SE COR OF SEC: N 676.50 FT; S 89D 39'27" W 1247.43 FT M/L TO CENTER THREAD OF RIVER; TH ALONG THREAD OF RIVER TO A PT DUE W OF POB; TH E 560.71 FT M/L TO BEG. GW. SEC. 18 T24N R10W -KINGSLEY- SEE ACT 513 ROLL FOR VALUE

Comments/Influences

	Improved
X	Vacant

Public Improvements

- Dirt Road
- Gravel Road
- Paved Road
- Storm Sewer
- Sidewalk
- Water
- Sewer
- Electric
- Gas
- Curb
- Street Lights
- Standard Utilities
- Underground Utils.

Topography of Site

- Level
- Rolling
- Low
- High
- Landscaped
- Swamp
- Wooded
- Pond
- Waterfront
- Ravine
- Wetland
- Flood Plain

Who	When	What
GLA	05/30/2017	INSPECTION

Land Value Estimates for Land Table 4010.LAND VALUES

Description	Frontage	Depth	* Factors * Front	Depth	Rate	%Adj.	Reason	Value
ACREAGE			554.720 Acres		2,480	100		1,375,706
			554.72 Total Acres				Total Est. Land Value =	1,375,706

Year	Land Value	Building Value	Assessed Value	Board of Review	Tribunal/ Other	Taxable Value
2024	687,900	0	687,900			480,703C
2023	527,000	0	527,000			457,813C
2022	471,500	0	471,500			436,013C
2021	416,000	0	416,000			422,085S

The Equalizer. Copyright (c) 1999 - 2009. Licensed To: Township of Greenwood, County of Wexford, Michigan

*** Information herein deemed reliable but not guaranteed***

Parcel Number: 2410-18-1102 Jurisdiction: GREENWOOD TWP County: WEXFORD Printed on 02/15/2024

Grantor	Grantee	Sale Price	Sale Date	Inst. Type	Terms of Sale	Liber & Page	Verified By	Prcnt. Trans.

Property Address	Class: RESIDENTIAL-IMPROV	Zoning:	Building Permit(s)	Date	Number	Status
955 N 25 RD	School: KINGSLEY AREA SCHOOL					
	P.R.E. 0%					
Owner's Name/Address	:					
CARR FAMILY COTTAGE TRUST 1600 W KALAMAZOO ST LANSING MI 48915	2024 Est TCV 268,727 TCV/TFA: 533.19					

X Improved | Vacant

Land Value Estimates for Land Table 4010.LAND VALUES

Description	Frontage	Depth	* Factors * Front	Depth	Rate	%Adj.	Reason	Value
MAN -RIVER LOW	676.00	0.00	1.0000	1.0000	315	100		212,940
676 Actual Front Feet, 0.00 Total Acres							Total Est. Land Value =	212,940

Land Improvement Cost Estimates

Description	Rate	Size	% Good	Cash Value
D/W/P: 4in Concrete	7.01	52	45	164
Wood Frame	39.52	27	45	480
Total Estimated Land Improvements True Cash Value =				644

Public Improvements

- X Dirt Road
- Gravel Road
- Paved Road
- Storm Sewer
- Sidewalk
- Water
- Sewer
- X Electric
- Gas
- Curb
- Street Lights
- Standard Utilities
- Underground Utils.

Topography of Site

- Level
- X Rolling
- Low
- High
- Landscaped
- Swamp
- X Wooded
- Pond
- Waterfront
- Ravine
- Wetland
- Flood Plain
- X OPEN

Tax Description

PAR COM 2329.26 FT N OF SE COR OF SEC: N 676.50 FT; S 89D39'27" W 1247.43 FT M/L TO CENTER THREAD OF MANISTEE RIVER; TH ALONG THREAD OF RIVER TO A PT DUE W OF POB; TH E 560.71 FT M/L TO BEG. 12.05 A. GW. SEC. 18 T24N R10W -KINGSLEY-

Comments/Influences

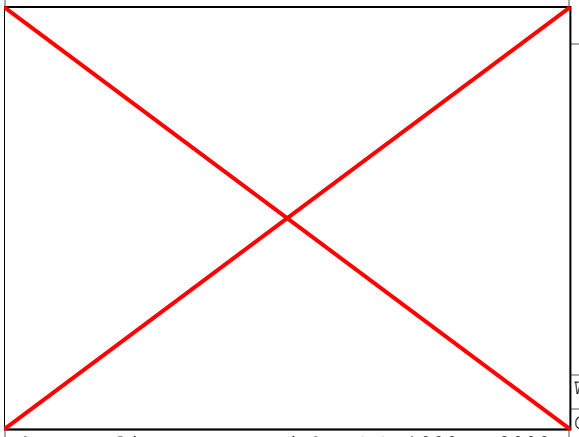

Who	When	What
GLA	05/30/2017	INSPECTION

Year	Land Value	Building Value	Assessed Value	Board of Review	Tribunal/ Other	Taxable Value
2024	106,500	27,900	134,400			18,792C
2023	100,000	22,900	122,900			17,898C
2022	91,300	19,400	110,700			17,046C
2021	67,600	19,700	87,300			16,502C

The Equalizer. Copyright (c) 1999 - 2009. Licensed To: Township of Greenwood, County of Wexford, Michigan

*** Information herein deemed reliable but not guaranteed***

Building Type

X	Single Family
	Mobile Home
	Town Home
	Duplex
	A-Frame
X	Wood Frame

Building Style: CABIN

Yr Built	Remodeled
0	1978

Condition: Good

Room List

	Basement
	1st Floor
	2nd Floor
	Bedrooms

(1) Exterior

X	Wood/Shingle
	Aluminum/Vinyl
	Brick
X	Insulation

(2) Windows

	Many		Large
X	Avg.	X	Avg.
	Few		Small

X	Wood Sash
	Metal Sash
	Vinyl Sash
	Double Hung
	Horiz. Slide
	Casement
	Double Glass
	Patio Doors
X	Storms & Screens

(3) Roof

X	Gable		Gambrel
	Hip		Mansard
	Flat		Shed

X	Asphalt Shingle

Chimney:

(3) Roof (cont.)

	Eavestrough
X	Insulation
0	Front Overhang
0	Other Overhang

(4) Interior

X	Drywall		Plaster
	Paneled		Wood T&G

Trim & Decoration

	Ex	X	Ord		Min

Size of Closets

	Lg	X	Ord		Small

Doors:		Solid	X	H.C.	

(5) Floors

Kitchen:
Other: Linoleum
Other: Carpeted

(6) Ceilings

X	Drywall

(7) Excavation

Basement: 0 S.F.
Crawl: 0 S.F.
Slab: 504 S.F.
Height to Joists: 0.0

(8) Basement

	Conc. Block
	Poured Conc.
	Stone
	Treated Wood
	Concrete Floor

(9) Basement Finish

	Recreation SF
	Living SF
	Walkout Doors (B)
	No Floor SF
	Walkout Doors (A)

(10) Floor Support

Joists:
Unsupported Len:
Cntr.Sup:

(11) Heating/Cooling

X	Gas		Oil		Elec.
	Wood		Coal		Steam

	Forced Air w/o Ducts
X	Forced Air w/ Ducts
	Forced Hot Water
	Electric Baseboard
	Elec. Ceil. Radiant
	Radiant (in-floor)
	Electric Wall Heat
	Space Heater
	Wall/Floor Furnace
	Forced Heat & Cool
	Heat Pump
	No Heating/Cooling

	Central Air
	Wood Furnace

(12) Electric

150	Amps Service

No./Qual. of Fixtures

	Ex.	X	Ord.		Min

No. of Elec. Outlets

	Many	X	Ave.		Few

(13) Plumbing

	Average Fixture(s)
1	3 Fixture Bath
	2 Fixture Bath
	Softener, Auto
	Softener, Manual
	Solar Water Heat
	No Plumbing
	Extra Toilet
	Extra Sink
	Separate Shower
	Ceramic Tile Floor
	Ceramic Tile Wains
	Ceramic Tub Alcove
	Vent Fan

(14) Water/Sewer

	Public Water
	Public Sewer
1	Water Well
1	1000 Gal Septic
	2000 Gal Septic

Lump Sum Items:

(15) Built-ins

	Appliance Allow.
	Cook Top
	Dishwasher
	Garbage Disposal
	Bath Heater
	Vent Fan
	Hot Tub
	Unvented Hood
	Vented Hood
	Intercom
	Jacuzzi Tub
	Jacuzzi repl.Tub
	Oven
	Microwave
	Standard Range
	Self Clean Range
	Sauna
	Trash Compactor
	Central Vacuum
	Security System

(15) Fireplaces

	Interior 1 Story
	Interior 2 Story
	2nd/Same Stack
	Two Sided
	Exterior 1 Story
	Exterior 2 Story
	Prefab 1 Story
	Prefab 2 Story
	Heat Circulator
	Raised Hearth
	Wood Stove
	Direct-Vented Gas

Class: CD
Effec. Age: 45
Floor Area: 504
Total Base New : 77,298 E.C.F.
Total Depr Cost: 42,516 X 1.297
Estimated T.C.V: 55,143

(16) Porches/Decks

Area	Type
64	WSEP (1 Story)

(17) Garage

Year Built:
Car Capacity:
Class:
Exterior:
Brick Ven.:
Stone Ven.:
Common Wall:
Foundation:
Finished ?:
Auto. Doors:
Mech. Doors:
Area:
% Good:
Storage Area:
No Conc. Floor:

Bsmnt Garage:

Carport Area:
Roof:

Cost Est. for Res. Bldg: 1 Single Family CABIN Cls CD Blt 0
(11) Heating System: Forced Air w/ Ducts
Ground Area = 504 SF Floor Area = 504 SF.
Phy/Ab.Phy/Func/Econ/Comb. % Good=55/100/100/100/55
Building Areas

Stories	Exterior	Foundation	Size	Cost New	Depr. Cost
1 Story	Siding	Slab	504		
			Total:	63,153	34,736
Other Additions/Adjustments					
Water/Sewer					
1000 Gal Septic			1	4,582	2,520
Water Well, 100 Feet			1	5,680	3,124
Porches					
WSEP (1 Story)			64	3,883	2,136
			Totals:	77,298	42,516

Notes:

ECF (RESIDENTIAL) 1.297 => TCV: 55,143

*** Information herein deemed reliable but not guaranteed***

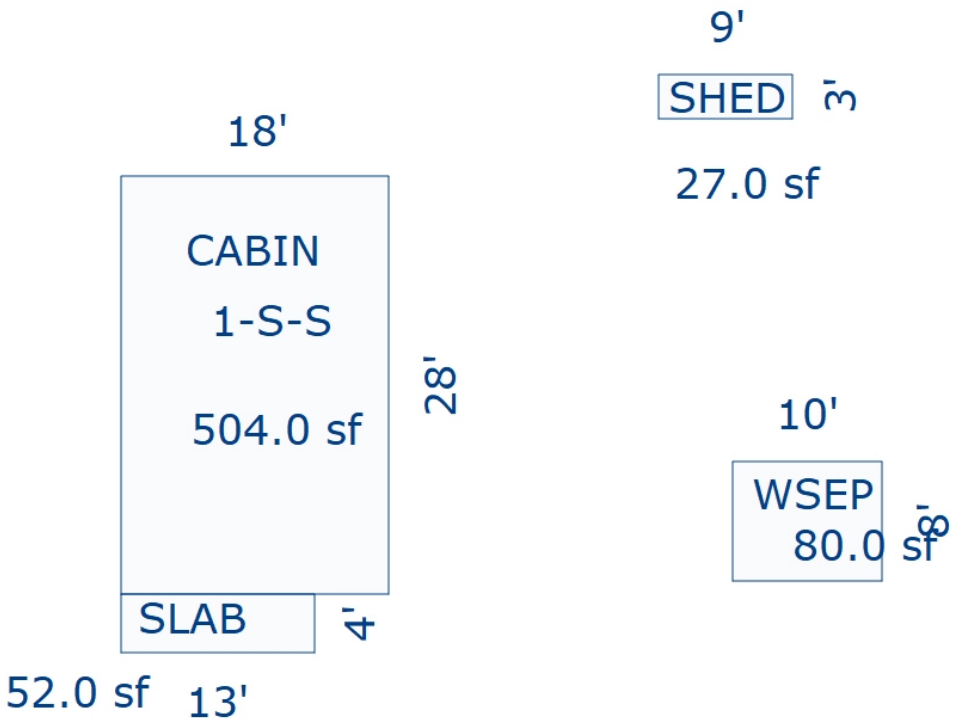

Sketch by Apex Sketch

*** Information herein deemed reliable but not guaranteed***

Parcel Number: 2410-18-2201 Jurisdiction: GREENWOOD TWP County: WEXFORD Printed on 02/15/2024

Grantor	Grantee	Sale Price	Sale Date	Inst. Type	Terms of Sale	Liber & Page	Verified By	Prcnt. Trans.

Property Address	Class: AGRICULTURAL-VACAN	Zoning:	Building Permit(s)	Date	Number	Status
	School: KINGSLEY AREA SCHOOL					
Owner's Name/Address	P.R.E. 0%					
	:					
STATE OF MICHIGAN P O BOX 30735 GRANTS ADMINISTRATION LANSING MI 48909	2024 Est TCV 0					

Improved | X | Vacant

Public Improvements

Dirt Road
Gravel Road
Paved Road
Storm Sewer
Sidewalk
Water
Sewer
Electric
Gas
Curb
Street Lights
Standard Utilities
Underground Utils.

Topography of Site

Level
Rolling
Low
High
Landscaped
Swamp
Wooded
Pond
Waterfront
Ravine
Wetland
Flood Plain

Who When What

GLA 05/30/2017 INSPECTION

Tax Description

NW 1/4 OF NW 1/4--29.45 A M/L-- GW. SEC. 18 T24N R10W -KINGSLEY-

Comments/Influences

Land Value Estimates for Land Table 4010.LAND VALUES

Description	Frontage	Depth	* Factors * Front	Depth	Rate	%Adj.	Reason	Value
ACREAGE			29.450 Acres		2,722	100		80,163
			29.45 Total Acres		Total Est. Land Value =			80,163

Year	Land Value	Building Value	Assessed Value	Board of Review	Tribunal/ Other	Taxable Value
2024	EXEMPT	EXEMPT	EXEMPT			EXEMPT
2023	EXEMPT	EXEMPT	EXEMPT			EXEMPT
2022	0	0	0			0
2021	0	0	0			0

The Equalizer. Copyright (c) 1999 - 2009. Licensed To: Township of Greenwood, County of Wexford, Michigan

*** Information herein deemed reliable but not guaranteed***

Parcel Number: 2410-19-1101 Jurisdiction: GREENWOOD TWP County: WEXFORD Printed on 02/15/2024

Grantor	Grantee	Sale Price	Sale Date	Inst. Type	Terms of Sale	Liber & Page	Verified By	Prcnt. Trans.
KOLLMEYER, DORIS L.	STATE OF MICHIGAN	65,000	02/29/2000	WD	03-ARM'S LENGTH	372:847	DEED	0.0

Property Address

Class: AGRICULTURAL-VACAN Zoning:

School: MANTON CONSOLIDATED SCHOOLS

P.R.E. 100% / /

:

2024 Est TCV 169,670

Building Permit(s)	Date	Number	Status

Owner's Name/Address

MICHIGAN DEPT OF
P O BOX 30735
GRANTS ADMINISTRATION
LANSING MI 48909-8235

Improved | X | Vacant

Public Improvements

Dirt Road
Gravel Road
Paved Road
Storm Sewer
Sidewalk
Water
Sewer
Electric
Gas
Curb
Street Lights
Standard Utilities
Underground Utils.

Topography of Site

Level
Rolling
Low
High
Landscaped
Swamp
Wooded
Pond
Waterfront
Ravine
Wetland
Flood Plain

Who When What

GLA 05/30/2017 INSPECTION

Land Value Estimates for Land Table 4010.LAND VALUES

Description	Frontage	Depth	* Factors * Front	Depth	Rate	%Adj.	Reason	Value
ACREAGE			65.000 Acres		2,610	100		169,670
			65.00 Total Acres		Total Est. Land Value =			169,670

Tax Description

NE 1/4 OF NE 1/4; SE 1/4 OF NE 1/4 EXC S 3/4 OF E 1/2 --65 A.-- GW. SEC. 19 T24N R10W -MANTON- SEE ACT 513 ROLL FOR VALUE

Comments/Influences

Year	Land Value	Building Value	Assessed Value	Board of Review	Tribunal/ Other	Taxable Value
2024	84,800	0	84,800			31,972C
2023	78,600	0	78,600			30,450C
2022	55,300	0	55,300			29,000C
2021	52,300	0	52,300			28,074C

The Equalizer. Copyright (c) 1999 - 2009. Licensed To: Township of Greenwood, County of Wexford, Michigan

*** Information herein deemed reliable but not guaranteed***

Parcel Number: 2410-19-1201 Jurisdiction: GREENWOOD TWP County: WEXFORD Printed on 02/15/2024

Grantor	Grantee	Sale Price	Sale Date	Inst. Type	Terms of Sale	Liber & Page	Verified By	Prcnt. Trans.

Property Address	Class: AGRICULTURAL-VACAN	Zoning:	Building Permit(s)	Date	Number	Status
	School: MANTON CONSOLIDATED SCHOOLS					
Owner's Name/Address	P.R.E. 0%					
	:					
STATE OF MICHIGAN P O BOX 30735 GRANTS ADMINISTRATION LANSING MI 48909-8235	2024 Est TCV 0					

Improved | X | Vacant

Land Value Estimates for Land Table 4010.LAND VALUES

Description	Frontage	Depth	* Factors * Front	Depth	Rate	%Adj.	Reason	Value
ACREAGE			200.000 Acres		2,480	100		496,000
			200.00 Total Acres		Total Est. Land Value =			496,000

Public Improvements

- Dirt Road
- Gravel Road
- Paved Road
- Storm Sewer
- Sidewalk
- Water
- Sewer
- Electric
- Gas
- Curb
- Street Lights
- Standard Utilities
- Underground Utils.

Topography of Site

- Level
- Rolling
- Low
- High
- Landscaped
- Swamp
- Wooded
- Pond
- Waterfront
- Ravine
- Wetland
- Flood Plain

Tax Description

W 1/2 OF NE 1/4; W 1/2 OF SE 1/4; SE 1/4 OF SE 1/4 --200 A.-- GW. SEC. 19 T24N R10W -MANTON-

Comments/Influences

Who	When	What
GLA	05/30/2017	INSPECTION

Year	Land Value	Building Value	Assessed Value	Board of Review	Tribunal/ Other	Taxable Value
2024	EXEMPT	EXEMPT	EXEMPT			EXEMPT
2023	EXEMPT	EXEMPT	EXEMPT			EXEMPT
2022	0	0	0			0
2021	0	0	0			0

The Equalizer. Copyright (c) 1999 - 2009. Licensed To: Township of Greenwood, County of Wexford, Michigan

*** Information herein deemed reliable but not guaranteed***

Parcel Number: 2410-19-1402 Jurisdiction: GREENWOOD TWP County: WEXFORD Printed on 02/15/2024

Grantor	Grantee	Sale Price	Sale Date	Inst. Type	Terms of Sale	Liber & Page	Verified By	Prcnt. Trans.

Property Address	Class: AGRICULTURAL-VACAN	Zoning:	Building Permit(s)	Date	Number	Status
	School: MANTON CONSOLIDATED SCHOOLS					
Owner's Name/Address	P.R.E. 0%					
STATE OF MICHIGAN	:					
	2024 Est TCV 0					

Improved | X | Vacant

Land Value Estimates for Land Table 4010.LAND VALUES

Description	Frontage	Depth	* Factors * Front	Depth	Rate	%Adj.	Reason	Value
ACREAGE			0.430 Acres		10,953	100		4,710
			0.43 Total Acres		Total Est. Land Value =			4,710

Public Improvements

- Dirt Road
- Gravel Road
- Paved Road
- Storm Sewer
- Sidewalk
- Water
- Sewer
- Electric
- Gas
- Curb
- Street Lights
- Standard Utilities
- Underground Utils.

Topography of Site

- Level
- Rolling
- Low
- High
- Landscaped
- Swamp
- Wooded
- Pond
- Waterfront
- Ravine
- Wetland
- Flood Plain

Tax Description

PAR COM 93 FT W OF SE COR OF S 1/2 OF NE 1/4 OF SE 1/4 OF NE 1/4: W 63 FT; N 300 FT; E 63 FT; S TO BEG. .43 A. M/L GW. SEC. 19 T24N R10W -MANTON-

Comments/Influences

Year	Land Value	Building Value	Assessed Value	Board of Review	Tribunal/ Other	Taxable Value
2024	EXEMPT	EXEMPT	EXEMPT			EXEMPT
2023	EXEMPT	EXEMPT	EXEMPT			EXEMPT
2022	0	0	0			0
2021	0	0	0			0

Who	When	What
GLA	05/30/2017	INSPECTION

The Equalizer. Copyright (c) 1999 - 2009. Licensed To: Township of Greenwood, County of Wexford, Michigan

*** Information herein deemed reliable but not guaranteed***

Parcel Number: 2410-19-1403 Jurisdiction: GREENWOOD TWP County: WEXFORD Printed on 02/15/2024

Grantor	Grantee	Sale Price	Sale Date	Inst. Type	Terms of Sale	Liber & Page	Verified By	Prcnt. Trans.
ITONEY, GEORGE	ITONEY, JOHN	0	11/08/2012	OTH	21-NOT USED/OTHER	691/17	DEED	0.0

Property Address

Class: RESIDENTIAL-VACANT Zoning:

School: MANTON CONSOLIDATED SCHOOLS

P.R.E. 0%

:

2024 Est TCV 20,718

Building Permit(s)	Date	Number	Status

Owner's Name/Address

ITONEY, JOHN
30125 OAKGROVE
ST CLAIR SHORES MI 48082

	Improved	X	Vacant

	Public Improvements
X	Dirt Road
	Gravel Road
	Paved Road
	Storm Sewer
	Sidewalk
	Water
	Sewer
	Electric
	Gas
	Curb
	Street Lights
	Standard Utilities
	Underground Utils.

	Topography of Site
	Level
	Rolling
	Low
X	High
	Landscaped
	Swamp
X	Wooded
	Pond
	Waterfront
	Ravine
	Wetland
	Flood Plain
X	OPEN

Who When What

GLA 05/30/2017 INSPECTION

Land Value Estimates for Land Table 4010.LAND VALUES

Description	Frontage	Depth	* Factors * Front	Depth	Rate	%Adj.	Reason	Value
ACREAGE			4.110 Acres		5,041	100		20,718
			4.11 Total Acres		Total Est. Land Value =			20,718

Tax Description

S 1/2 OF NE 1/4 OF SE 1/4 OF NE 1/4 EXC COM 93 FT W OF SE COR: W 63 FT; N 300 FT; E 63 FT; S TO BEG & EXC COM 594 FT W OF SE COR: W 63 FT; N 300 FT; E 63 FT; S TO BEG. (LOT 10) --4.11 A M/L-- GW. SEC. 19 T24N R10W -MANTON-

Comments/Influences

Year	Land Value	Building Value	Assessed Value	Board of Review	Tribunal/ Other	Taxable Value
2024	10,400	0	10,400			2,639C
2023	9,500	0	9,500			2,514C
2022	7,100	0	7,100			2,395C
2021	8,400	0	8,400			2,319C

The Equalizer. Copyright (c) 1999 - 2009. Licensed To: Township of Greenwood, County of Wexford, Michigan

*** Information herein deemed reliable but not guaranteed***

Parcel Number: 2410-19-1404 Jurisdiction: GREENWOOD TWP County: WEXFORD Printed on 02/15/2024

Grantor	Grantee	Sale Price	Sale Date	Inst. Type	Terms of Sale	Liber & Page	Verified By	Prcnt. Trans.
WEXFORD CO TREASURER	GIBERSON, MARK & PAULINE	3,000	10/19/2002	QC	09-FAMILY	448:33	DEED	0.0

Property Address

Class: RESIDENTIAL-VACANT Zoning:

School: MANTON CONSOLIDATED SCHOOLS

P.R.E. 0%

:

2024 Est TCV 4,710

Building Permit(s)	Date	Number	Status

Owner's Name/Address

GIBERSON, MARK
& PAULINE
4732 MEADOW LN
MESICK MI 49668

	Improved	X	Vacant

Land Value Estimates for Land Table 4010.LAND VALUES

Description	Frontage	Depth	* Factors * Front	Depth	Rate	%Adj.	Reason	Value
ACREAGE			0.430 Acres		10,953	100		4,710
			0.43 Total Acres		Total Est. Land Value =			4,710

Tax Description

COM 594 FT W OF SE COR OF NE 1/4 OF SE 1/4 OF NE 1/4: W 63 FT; N 300 FT; E 63 FT; S TO BEG. REFERRED TO AS LOT 10 .43 A. M/L GW. SEC. 19 T24N R10W -MANTON-

Comments/Influences

	Public Improvements
X	Dirt Road
	Gravel Road
	Paved Road
	Storm Sewer
	Sidewalk
	Water
	Sewer
	Electric
	Gas
	Curb
	Street Lights
	Standard Utilities
	Underground Utils.

	Topography of Site
	Level
X	Rolling
	Low
	High
	Landscaped
	Swamp
	Wooded
	Pond
	Waterfront
	Ravine
	Wetland
	Flood Plain
X	OPEN

Year	Land Value	Building Value	Assessed Value	Board of Review	Tribunal/ Other	Taxable Value
2024	2,400	0	2,400			1,104C
2023	1,300	0	1,300			1,052C
2022	1,100	0	1,100			1,002C
2021	1,300	0	1,300			970C

Who	When	What
GLA	05/30/2017	INSPECTION

The Equalizer. Copyright (c) 1999 - 2009. Licensed To: Township of Greenwood, County of Wexford, Michigan

*** Information herein deemed reliable but not guaranteed***

Parcel Number: 2410-19-1405 Jurisdiction: GREENWOOD TWP County: WEXFORD Printed on 02/15/2024

Grantor	Grantee	Sale Price	Sale Date	Inst. Type	Terms of Sale	Liber & Page	Verified By	Prcnt. Trans.
HOESE, ROGER G.	ITONEY, JOHN & TRACEY	41,000	08/06/2018	WD	03-ARM'S LENGTH	683/740	DEED	100.0
BOOTH, DENNIS L ESTATE	BOOTH, MARY ELIZABETH	0	03/04/2015	WD	08-ESTATE	674/1717	DEED	0.0
ITONEY, JOHN & TRACEY	ITONEY, JOHN	0	11/08/2012	OTH	06-COURT JUDGEMENT	691/18	DEED	0.0
PICCARD, VIRGINIA	HOESE ET AL, ROGER G.	5,000	06/14/1990	WD	03-ARM'S LENGTH	320:866	DEED	0.0

Property Address

943 KOLARVIC RD

Owner's Name/Address

ITONEY, JOHN
30125 OAK GROVE ST
SAINT CLAIR SHORES MI 48082

Tax Description

SE 1/4 OF SE 1/4 OF NE 1/4 10 A. GW. SEC. 19 T24N R10W -MANTON-

Comments/Influences

Class: RESIDENTIAL-IMPROV Zoning:

School: MANTON CONSOLIDATED SCHOOLS

P.R.E. 0%

:

2024 Est TCV 185,305 TCV/TFA: 120.64

Building Permit(s)	Date	Number	Status

X Improved | Vacant

	Public Improvements
	Dirt Road
X	Gravel Road
	Paved Road
	Storm Sewer
	Sidewalk
	Water
	Sewer
X	Electric
	Gas
	Curb
	Street Lights
	Standard Utilities
	Underground Utils.

	Topography of Site
	Level
X	Rolling
	Low
	High
	Landscaped
	Swamp
	Wooded
	Pond
	Waterfront
	Ravine
	Wetland
	Flood Plain

Who	When	What
GLA	05/30/2017	INSPECTION
GLA	08/11/2014	INSPECTION

Land Value Estimates for Land Table 4010.LAND VALUES

Description	Frontage	Depth	* Factors * Front	Depth	Rate	%Adj.	Reason	Value
	500.00	0.00	1.0000	1.0000	0	100		0
ACREAGE			9.950	Acres	4,641	100		46,174
500 Actual Front Feet, 9.95 Total Acres							Total Est. Land Value =	46,174

Land Improvement Cost Estimates

Description	Rate	Size	% Good	Cash Value
Wood Frame	19.22	256	18	886
Total Estimated Land Improvements True Cash Value =				886

Year	Land Value	Building Value	Assessed Value	Board of Review	Tribunal/ Other	Taxable Value
2024	23,100	69,600	92,700			66,486C
2023	13,000	57,000	70,000			63,320C
2022	13,000	48,300	61,300			60,305C
2021	13,000	49,000	62,000			58,379C

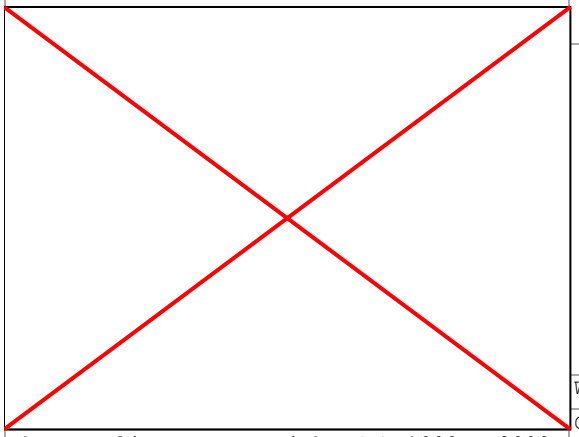

The Equalizer. Copyright (c) 1999 - 2009.
Licensed To: Township of Greenwood, County of Wexford, Michigan

*** Information herein deemed reliable but not guaranteed***

Building Type

X	Single Family
	Mobile Home
	Town Home
	Duplex
	A-Frame
X	Wood Frame

Building Style: TWO STORY

Yr Built	Remodeled
0	1998

Condition: Fair

Room List

	Basement
	1st Floor
	2nd Floor
	Bedrooms

(1) Exterior

X	Wood/Shingle
	Aluminum/Vinyl
	Brick
	Insulation

(2) Windows

	Many		Large
X	Avg.	X	Avg.
	Few		Small

	Wood Sash
	Metal Sash
X	Vinyl Sash
X	Double Hung
	Horiz. Slide
	Casement
	Double Glass
X	Patio Doors
	Storms & Screens

(3) Roof

X	Gable		Gambrel
	Hip		Mansard
	Flat		Shed

X	Asphalt Shingle

Chimney: Block

(3) Roof (cont.)

	Eavestrough
	Insulation
0	Front Overhang
0	Other Overhang

(4) Interior

	Drywall		Plaster
	Paneled		Wood T&G

Trim & Decoration

	Ex		Ord		Min

Size of Closets

	Lg		Ord		Small

Doors:		Solid		H.C.

(5) Floors

Kitchen:
Other:
Other:

(6) Ceilings

(7) Excavation

Basement: 0 S.F.
Crawl: 0 S.F.
Slab: 768 S.F.
Height to Joists: 0.0

(8) Basement

	Conc. Block
	Poured Conc.
	Stone
	Treated Wood
	Concrete Floor

(9) Basement Finish

	Recreation SF
	Living SF
	Walkout Doors (B)
	No Floor SF
	Walkout Doors (A)

(10) Floor Support

Joists:
Unsupported Len:
Cntr.Sup:

(11) Heating/Cooling

X	Gas		Oil		Elec.
	Wood		Coal		Steam

	Forced Air w/o Ducts
X	Forced Air w/ Ducts
	Forced Hot Water
	Electric Baseboard
	Elec. Ceil. Radiant
	Radiant (in-floor)
	Electric Wall Heat
	Space Heater
	Wall/Floor Furnace
	Forced Heat & Cool
	Heat Pump
	No Heating/Cooling
	Central Air
	Wood Furnace

(12) Electric

0	Amps Service

No./Qual. of Fixtures

	Ex.		Ord.		Min

No. of Elec. Outlets

	Many		Ave.		Few

(13) Plumbing

	Average Fixture(s)
1	3 Fixture Bath
	2 Fixture Bath
	Softener, Auto
	Softener, Manual
	Solar Water Heat
	No Plumbing
	Extra Toilet
	Extra Sink
	Separate Shower
	Ceramic Tile Floor
	Ceramic Tile Wains
	Ceramic Tub Alcove
	Vent Fan

(14) Water/Sewer

	Public Water
	Public Sewer
1	Water Well
1	1000 Gal Septic
	2000 Gal Septic

Lump Sum Items:
192

(15) Built-ins

	Appliance Allow.
	Cook Top
	Dishwasher
	Garbage Disposal
	Bath Heater
	Vent Fan
	Hot Tub
	Unvented Hood
	Vented Hood
	Intercom
	Jacuzzi Tub
	Jacuzzi repl.Tub
	Oven
	Microwave
	Standard Range
	Self Clean Range
	Sauna
	Trash Compactor
	Central Vacuum
	Security System

(15) Fireplaces

	Interior 1 Story
	Interior 2 Story
	2nd/Same Stack
	Two Sided
	Exterior 1 Story
	Exterior 2 Story
	Prefab 1 Story
	Prefab 2 Story
	Heat Circulator
	Raised Hearth
1	Wood Stove
	Direct-Vented Gas

Class: CD
Effec. Age: 39
Floor Area: 1,536
Total Base New : 174,734 E.C.F.
Total Depr Cost: 106,588 X 1.297
Estimated T.C.V: 138,245

(16) Porches/Decks

Area	Type
36	CCP (1 Story)

(17) Garage

Year Built:
Car Capacity:
Class:
Exterior:
Brick Ven.:
Stone Ven.:
Common Wall:
Foundation:
Finished ?:
Auto. Doors:
Mech. Doors:
Area:
% Good:
Storage Area:
No Conc. Floor:

Bsmnt Garage:

Carport Area:
Roof:

Cost Est. for Res. Bldg: 1 Single Family TWO STORY Cls CD Blt 0
(11) Heating System: Forced Air w/ Ducts
Ground Area = 768 SF Floor Area = 1536 SF.
Phy/Ab.Phy/Func/Econ/Comb. % Good=61/100/100/100/61
Building Areas

Stories	Exterior	Foundation	Size	Cost New	Depr. Cost
2 Story	Siding	Slab	768		
			Total:	160,386	97,835
Other Additions/Adjustments					
Water/Sewer					
1000 Gal Septic			1	4,582	2,795
Water Well, 100 Feet			1	5,680	3,465
Porches					
CCP (1 Story)			36	1,073	655
Fireplaces					
Wood Stove			1	2,164	1,320
Lump Sum Items					
CONC BLOCK SHED				849	518
			Totals:	174,734	106,588

Notes:

ECF (RESIDENTIAL) 1.297 => TCV: 138,245

*** Information herein deemed reliable but not guaranteed***

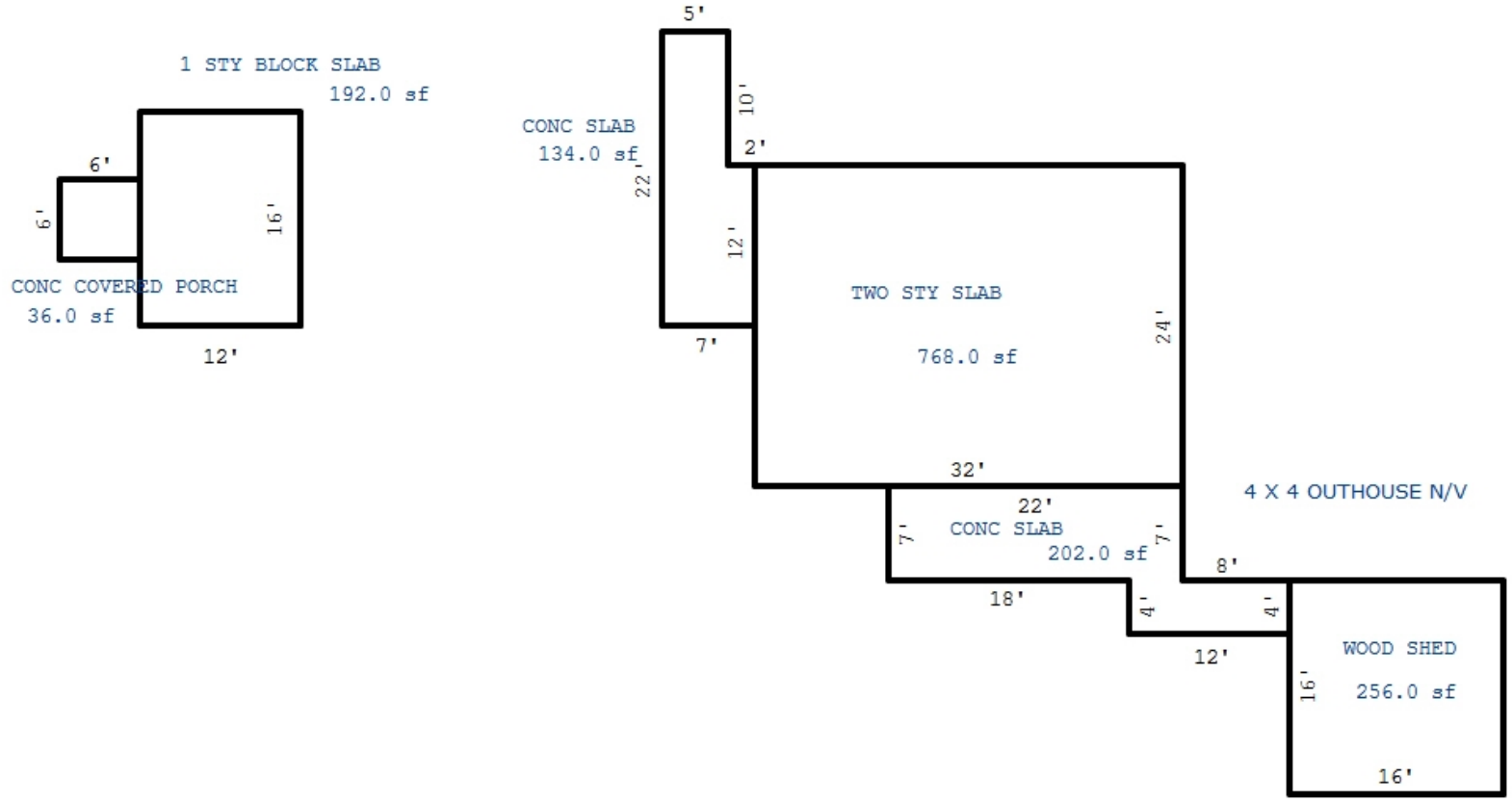

Sketch by Apex Sketch

*** Information herein deemed reliable but not guaranteed***

Parcel Number: 2410-19-2101 Jurisdiction: GREENWOOD TWP County: WEXFORD Printed on 02/15/2024

Grantor	Grantee	Sale Price	Sale Date	Inst. Type	Terms of Sale	Liber & Page	Verified By	Prcnt. Trans.

Property Address	Class: AGRICULTURAL-VACAN	Zoning:	Building Permit(s)	Date	Number	Status
	School: MANTON CONSOLIDATED SCHOOLS					
Owner's Name/Address	P.R.E. 100% / /					
MICHIGAN DEPT OF P O BOX 30735 GRANTS ADMINISTRATION LANSING MI 48909-8235	:					
	2024 Est TCV 542,773					

Tax Description

FRL W 1/2 EXC FRL SW 1/4 OF FRL NW 1/4 & EXC FRL NW 1/4 OF FRL SW 1/4 218.86 A. GW. SEC. 19 T24N R10W -MANTON- SEE ACT 513 ROLL FOR VALUE

Comments/Influences

	Improved	X	Vacant

Public Improvements

	Dirt Road
	Gravel Road
	Paved Road
	Storm Sewer
	Sidewalk
	Water
	Sewer
	Electric
	Gas
	Curb
	Street Lights
	Standard Utilities
	Underground Utils.

Topography of Site

	Level
	Rolling
	Low
	High
	Landscaped
	Swamp
	Wooded
	Pond
	Waterfront
	Ravine
	Wetland
	Flood Plain

Who	When	What
GLA	05/30/2017	INSPECTION

Land Value Estimates for Land Table 4010.LAND VALUES

Description	Frontage	Depth	* Factors * Front	Depth	Rate	%Adj.	Reason	Value
ACREAGE			218.860 Acres		2,480	100		542,773
			218.86 Total Acres		Total Est. Land Value =			542,773

Year	Land Value	Building Value	Assessed Value	Board of Review	Tribunal/ Other	Taxable Value
2024	271,400	0	271,400			83,714C
2023	207,900	0	207,900			79,728C
2022	186,000	0	186,000			75,932C
2021	164,100	0	164,100			73,507C

The Equalizer. Copyright (c) 1999 - 2009. Licensed To: Township of Greenwood, County of Wexford, Michigan

*** Information herein deemed reliable but not guaranteed***

Parcel Number: 2410-19-2301 Jurisdiction: GREENWOOD TWP County: WEXFORD Printed on 02/15/2024

Grantor	Grantee	Sale Price	Sale Date	Inst. Type	Terms of Sale	Liber & Page	Verified By	Prcnt. Trans.
FRIER, ALAN	FRIER, ALAN & THEA LE	0	10/02/2016	QC	18-LIFE ESTATE	6781/923	DEED	0.0

Property Address

Owner's Name/Address

FRIER, ALAN & THEA LE
820 LINCOLN ST.
CADILLAC MI 49601

Tax Description

FRL SW 1/4 OF FRL NW 1/4 & FRL NW 1/4 OF FRL SW 1/4 58.87 A. GW. SEC. 19 T24N R10W -MANTON- (COMMERCIAL FOREST '80)

Comments/Influences

The Equalizer. Copyright (c) 1999 - 2009. Licensed To: Township of Greenwood, County of Wexford, Michigan

Class: RESIDENTIAL-VACANT Zoning:

School: MANTON CONSOLIDATED SCHOOLS

P.R.E. 0%

:

2024 Est TCV 0

Building Permit(s)	Date	Number	Status

[ ] Improved [X] Vacant

Public Improvements

- [ ] Dirt Road
- [ ] Gravel Road
- [ ] Paved Road
- [ ] Storm Sewer
- [ ] Sidewalk
- [ ] Water
- [ ] Sewer
- [ ] Electric
- [ ] Gas
- [ ] Curb
- [ ] Street Lights
- [ ] Standard Utilities
- [ ] Underground Utils.

Topography of Site

- [ ] Level
- [ ] Rolling
- [ ] Low
- [ ] High
- [ ] Landscaped
- [ ] Swamp
- [ ] Wooded
- [ ] Pond
- [ ] Waterfront
- [ ] Ravine
- [ ] Wetland
- [ ] Flood Plain

Who When What

GLA 05/30/2017 INSPECTION

Land Value Estimates for Land Table 4010.LAND VALUES

Description	Frontage	Depth	* Factors * Front	Depth	Rate	%Adj.	Reason	Value
		0.00	Total Acres		Total Est. Land Value =			0

Year	Land Value	Building Value	Assessed Value	Board of Review	Tribunal/ Other	Taxable Value
2024	0	0	0			0
2023	0	0	0			0
2022	0	0	0			0
2021	0	0	0			0

*** Information herein deemed reliable but not guaranteed***

Parcel Number: 2410-19-4101 Jurisdiction: GREENWOOD TWP County: WEXFORD Printed on 02/15/2024

Grantor	Grantee	Sale Price	Sale Date	Inst. Type	Terms of Sale	Liber & Page	Verified By	Prcnt. Trans.
BOGART, JENNIE H.	VESELSKY, DAVID & NORMA	35,000	10/21/1998	WD	03-ARM'S LENGTH	364:89	DEED	0.0

Property Address

Owner's Name/Address

VESELSKY, DAVID G
& NORMA S
12160 FAIRBANKS RD
LINDEN MI 48451

Tax Description

NE 1/4 OF SE 1/4 40 A. GW. SEC. 19 T24N R10W -MANTON-

Comments/Influences

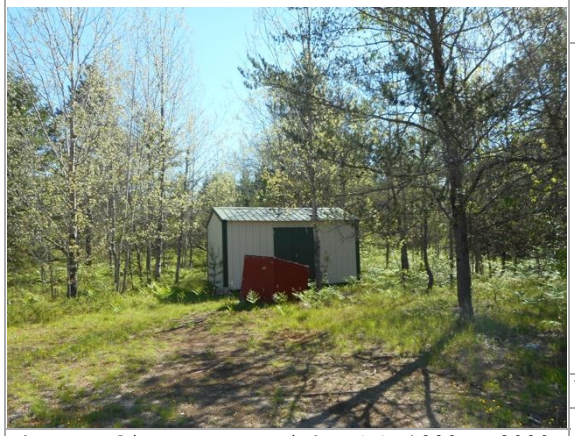

The Equalizer. Copyright (c) 1999 - 2009. Licensed To: Township of Greenwood, County of Wexford, Michigan

Class: RESIDENTIAL-IMPROV Zoning:

School: MANTON CONSOLIDATED SCHOOLS

P.R.E. 0%

:

2024 Est TCV 111,638

Building Permit(s)	Date	Number	Status

	Improved	X	Vacant

	Public Improvements
X	Dirt Road
	Gravel Road
	Paved Road
	Storm Sewer
	Sidewalk
	Water
	Sewer
	Electric
	Gas
	Curb
	Street Lights
	Standard Utilities
	Underground Utils.

	Topography of Site
	Level
X	Rolling
	Low
	High
	Landscaped
	Swamp
X	Wooded
	Pond
	Waterfront
	Ravine
	Wetland
	Flood Plain
X	OPEN

Who	When	What
GLA	05/30/2017	INSPECTION

Land Value Estimates for Land Table 4010.LAND VALUES

Description	Frontage	Depth	* Factors * Front	Depth	Rate	%Adj.	Reason	Value
ACREAGE			40.000 Acres		2,722	100		108,880
			40.00 Total Acres		Total Est. Land Value =			108,880

Land Improvement Cost Estimates

Description	Rate	Size	% Good	Cash Value
Wood Frame	21.02	160	82	2,758
Total Estimated Land Improvements True Cash Value =				2,758

Year	Land Value	Building Value	Assessed Value	Board of Review	Tribunal/ Other	Taxable Value
2024	54,400	1,400	55,800			31,074C
2023	48,000	1,300	49,300			29,595C
2022	38,000	1,200	39,200			28,186C
2021	34,000	1,100	35,100			27,286C

*** Information herein deemed reliable but not guaranteed***

Parcel Number: 2410-20-1101 Jurisdiction: GREENWOOD TWP County: WEXFORD Printed on 02/15/2024

Grantor	Grantee	Sale Price	Sale Date	Inst. Type	Terms of Sale	Liber & Page	Verified By	Prcnt. Trans.

Property Address	Class: AGRICULTURAL-VACAN	Zoning:	Building Permit(s)	Date	Number	Status
	School: MANTON CONSOLIDATED SCHOOLS					
Owner's Name/Address	P.R.E. 0%					
STATE OF MICHIGAN P O BOX 30735 GRANTS ADMINISTRATION LANSING MI 48909-8235	:					
	2024 Est TCV 0					

Improved | X | Vacant

Land Value Estimates for Land Table 4010.LAND VALUES

Description	Frontage	Depth	* Factors * Front	Depth	Rate	%Adj.	Reason	Value
ACREAGE			480.000 Acres		2,480	100		1,190,400
			480.00 Total Acres		Total Est. Land Value =			1,190,400

Public Improvements

- Dirt Road
- Gravel Road
- Paved Road
- Storm Sewer
- Sidewalk
- Water
- Sewer
- Electric
- Gas
- Curb
- Street Lights
- Standard Utilities
- Underground Utils.

Topography of Site

- Level
- Rolling
- Low
- High
- Landscaped
- Swamp
- Wooded
- Pond
- Waterfront
- Ravine
- Wetland
- Flood Plain

Tax Description

ENTIRE SEC 20 EXC N 1/2 OF NW 1/4 & EXC E 1/2 OF SE 1/4 480 A. GW. SEC. 20 T24N R10W -MANTON-

Comments/Influences

Who	When	What
GLA	05/30/2017	INSPECTION

Year	Land Value	Building Value	Assessed Value	Board of Review	Tribunal/ Other	Taxable Value
2024	EXEMPT	EXEMPT	EXEMPT			EXEMPT
2023	EXEMPT	EXEMPT	EXEMPT			EXEMPT
2022	0	0	0			0
2021	0	0	0			0

The Equalizer. Copyright (c) 1999 - 2009. Licensed To: Township of Greenwood, County of Wexford, Michigan

*** Information herein deemed reliable but not guaranteed***

Parcel Number: 2410-20-2101 Jurisdiction: GREENWOOD TWP County: WEXFORD Printed on 02/15/2024

Grantor	Grantee	Sale Price	Sale Date	Inst. Type	Terms of Sale	Liber & Page	Verified By	Prcnt. Trans.

Property Address	Class: AGRICULTURAL-VACAN	Zoning:	Building Permit(s)	Date	Number	Status
	School: MANTON CONSOLIDATED SCHOOLS					
	P.R.E. 100% / /					
Owner's Name/Address	:					
MICHIGAN DEPT OF P O BOX 30735 GRANTS ADMINISTRATION LANSING MI 48909-8235	2024 Est TCV 203,240					

Improved | X | Vacant

Land Value Estimates for Land Table 4010.LAND VALUES

Description	Frontage	Depth	* Factors * Front	Depth	Rate	%Adj.	Reason	Value
ACREAGE			80.000 Acres		2,541	100		203,240
			80.00 Total Acres		Total Est. Land Value =			203,240

Public Improvements

- Dirt Road
- Gravel Road
- Paved Road
- Storm Sewer
- Sidewalk
- Water
- Sewer
- Electric
- Gas
- Curb
- Street Lights
- Standard Utilities
- Underground Utils.

Topography of Site

- Level
- Rolling
- Low
- High
- Landscaped
- Swamp
- Wooded
- Pond
- Waterfront
- Ravine
- Wetland
- Flood Plain

Tax Description

N 1/2 OF NW 1/4 80 A. GW. SEC. 20 T24N R10W-MANTON- SEE ACT 513 ROLL FOR VALUE

Comments/Influences

Who	When	What
GLA	05/30/2017	INSPECTION

Year	Land Value	Building Value	Assessed Value	Board of Review	Tribunal/ Other	Taxable Value
2024	101,600	0	101,600			27,714C
2023	85,600	0	85,600			26,395C
2022	68,000	0	68,000			25,139C
2021	62,000	0	62,000			24,336C

The Equalizer. Copyright (c) 1999 - 2009. Licensed To: Township of Greenwood, County of Wexford, Michigan

*** Information herein deemed reliable but not guaranteed***

Parcel Number: 2410-20-4101 Jurisdiction: GREENWOOD TWP County: WEXFORD Printed on 02/15/2024

Grantor	Grantee	Sale Price	Sale Date	Inst. Type	Terms of Sale	Liber & Page	Verified By	Prcnt. Trans.
HARBOUR, ESTELLE M	SACKETT, ADAM J	0	07/08/2021	QC	21-NOT USED/OTHER	690/1805	DEED	50.0
SACKETT, KENNETH J	SACKETT, ADAM J ETAL	1	03/08/2021	QC	09-FAMILY	689/2594	AGENT	0.0
SACKETT, RONALD L	SACKETT, KENNETH J	1	03/01/2021	QC	09-FAMILY	689/2593	AGENT	0.0
NOWAK, SUZANNE M	SACKETT, KENNETH ET AL	1	04/26/2016	QC	21-NOT USED/OTHER	6771/900	DEED	0.0

Property Address

8375 N 25 RD

Owner's Name/Address

SACKETT, KENNETH J ETAL
8273 210TH AVE
REED CITY MI 49677

Tax Description

NE 1/4 OF SE 1/4 40 A. GW. SEC. 20 T24N R10W -MANTON-

Comments/Influences

Class: RESIDENTIAL-IMPROV Zoning:

School: MANTON CONSOLIDATED SCHOOLS

P.R.E. 0%

:

2024 Est TCV 176,436 TCV/TFA: 193.46

Building Permit(s)	Date	Number	Status

X Improved | Vacant

Public Improvements

- Dirt Road
- Gravel Road
- Paved Road
- Storm Sewer
- Sidewalk
- Water
- Sewer
- Electric
- Gas
- Curb
- Street Lights
- Standard Utilities
- Underground Utils.

Topography of Site

- Level
- Rolling
- Low
- High
- Landscaped
- Swamp
- Wooded
- Pond
- Waterfront
- Ravine
- Wetland
- Flood Plain

Who When What

GLA 05/30/2017 INSPECTION

Land Value Estimates for Land Table 4010.LAND VALUES

Description	Frontage	Depth	* Factors * Front	Depth	Rate	%Adj.	Reason	Value
ACREAGE			39.890 Acres		2,722	100		108,581
			39.89 Total Acres			Total Est. Land Value =		108,581

Land Improvement Cost Estimates

Description	Rate	Size	% Good	Cash Value
Wood Frame	21.16	160	18	609
Total Estimated Land Improvements True Cash Value =				609

Year	Land Value	Building Value	Assessed Value	Board of Review	Tribunal/ Other	Taxable Value
2024	54,300	33,900	88,200			29,628C
2023	47,900	27,200	75,100			28,218C
2022	37,900	22,900	60,800	60,800J		26,875C
2021	33,900	23,500	57,400			26,017C

The Equalizer. Copyright (c) 1999 - 2009.
Licensed To: Township of Greenwood, County of Wexford, Michigan

*** Information herein deemed reliable but not guaranteed***

Building Type

X	Single Family
	Mobile Home
	Town Home
	Duplex
	A-Frame
X	Wood Frame

Building Style: CABIN

Yr Built	Remodeled
0	0

Condition: Fair

Room List

	Basement
	1st Floor
	2nd Floor
	Bedrooms

(1) Exterior

X	Wood/Shingle
	Aluminum/Vinyl
	Brick
	Insulation

(2) Windows

X	Many		Large
	Avg.	X	Avg.
	Few		Small

	Wood Sash
	Metal Sash
	Vinyl Sash
	Double Hung
	Horiz. Slide
	Casement
	Double Glass
	Patio Doors
	Storms & Screens

(3) Roof

X	Gable		Gambrel
	Hip		Mansard
	Flat		Shed
X	Asphalt Shingle		

Chimney: Brick

(3) Roof (cont.)

	Eavestrough
	Insulation
0	Front Overhang
0	Other Overhang

(4) Interior

	Drywall		Plaster
	Paneled		Wood T&G

Trim & Decoration

	Ex	X	Ord		Min

Size of Closets

	Lg	X	Ord		Small

Doors:		Solid	X	H.C.	

(5) Floors

Kitchen:
Other:
Other:

(6) Ceilings

(7) Excavation

Basement: 0 S.F.
Crawl: 0 S.F.
Slab: 480 S.F.
Height to Joists: 0.0

(8) Basement

	Conc. Block
	Poured Conc.
	Stone
	Treated Wood
	Concrete Floor

(9) Basement Finish

	Recreation SF
	Living SF
	Walkout Doors (B)
	No Floor SF
	Walkout Doors (A)

(10) Floor Support

Joists:
Unsupported Len:
Cntr.Sup:

(11) Heating/Cooling

X	Gas		Oil		Elec.
	Wood		Coal		Steam

	Forced Air w/o Ducts
	Forced Air w/ Ducts
	Forced Hot Water
	Electric Baseboard
	Elec. Ceil. Radiant
	Radiant (in-floor)
	Electric Wall Heat
X	Space Heater
	Wall/Floor Furnace
	Forced Heat & Cool
	Heat Pump
	No Heating/Cooling

	Central Air
	Wood Furnace

(12) Electric

0	Amps Service

No./Qual. of Fixtures

	Ex.	X	Ord.		Min

No. of Elec. Outlets

	Many	X	Ave.		Few

(13) Plumbing

1	Average Fixture(s)
	3 Fixture Bath
	2 Fixture Bath
	Softener, Auto
	Softener, Manual
	Solar Water Heat
	No Plumbing
	Extra Toilet
	Extra Sink
	Separate Shower
	Ceramic Tile Floor
	Ceramic Tile Wains
	Ceramic Tub Alcove
	Vent Fan

(14) Water/Sewer

	Public Water
	Public Sewer
1	Water Well
	1000 Gal Septic
	2000 Gal Septic

Lump Sum Items:

(15) Built-ins

	Appliance Allow.
	Cook Top
	Dishwasher
	Garbage Disposal
	Bath Heater
	Vent Fan
	Hot Tub
	Unvented Hood
	Vented Hood
	Intercom
	Jacuzzi Tub
	Jacuzzi repl.Tub
	Oven
	Microwave
	Standard Range
	Self Clean Range
	Sauna
	Trash Compactor
	Central Vacuum
	Security System

(15) Fireplaces

	Interior 1 Story
	Interior 2 Story
	2nd/Same Stack
	Two Sided
	Exterior 1 Story
	Exterior 2 Story
	Prefab 1 Story
	Prefab 2 Story
	Heat Circulator
	Raised Hearth
1	Wood Stove
	Direct-Vented Gas

Class: D
Effec. Age: 57
Floor Area: 480
Total Base New : 62,560 E.C.F.
Total Depr Cost: 28,153 X 1.297
Estimated T.C.V: 36,515

(16) Porches/Decks

Area	Type
87	CPP
120	CPP

(17) Garage

Year Built:
Car Capacity:
Class:
Exterior:
Brick Ven.:
Stone Ven.:
Common Wall:
Foundation:
Finished ?:
Auto. Doors:
Mech. Doors:
Area:
% Good:
Storage Area:
No Conc. Floor:

Bsmnt Garage:

Carport Area:
Roof:

Cost Est. for Res. Bldg: 1 Single Family CABIN Cls D Blt 0
(11) Heating System: Space Heater
Ground Area = 480 SF Floor Area = 480 SF.
Phy/Ab.Phy/Func/Econ/Comb. % Good=45/100/100/100/45
Building Areas

Stories	Exterior	Foundation	Size	Cost New	Depr. Cost
1 Story	Block	Slab	480		
			Total:	56,636	25,488
Other Additions/Adjustments					
Porches					
CPP			87	1,498	674
Foundation: Shallow			87	-822	-370
CPP			120	1,889	850
Foundation: Shallow			120	-979	-441
Water/Sewer					
Water Well, 50 Feet			1	2,533	1,140
Fireplaces					
Wood Stove			1	1,805	812
			Totals:	62,560	28,153

Notes:

ECF (RESIDENTIAL) 1.297 => TCV: 36,515

*** Information herein deemed reliable but not guaranteed***

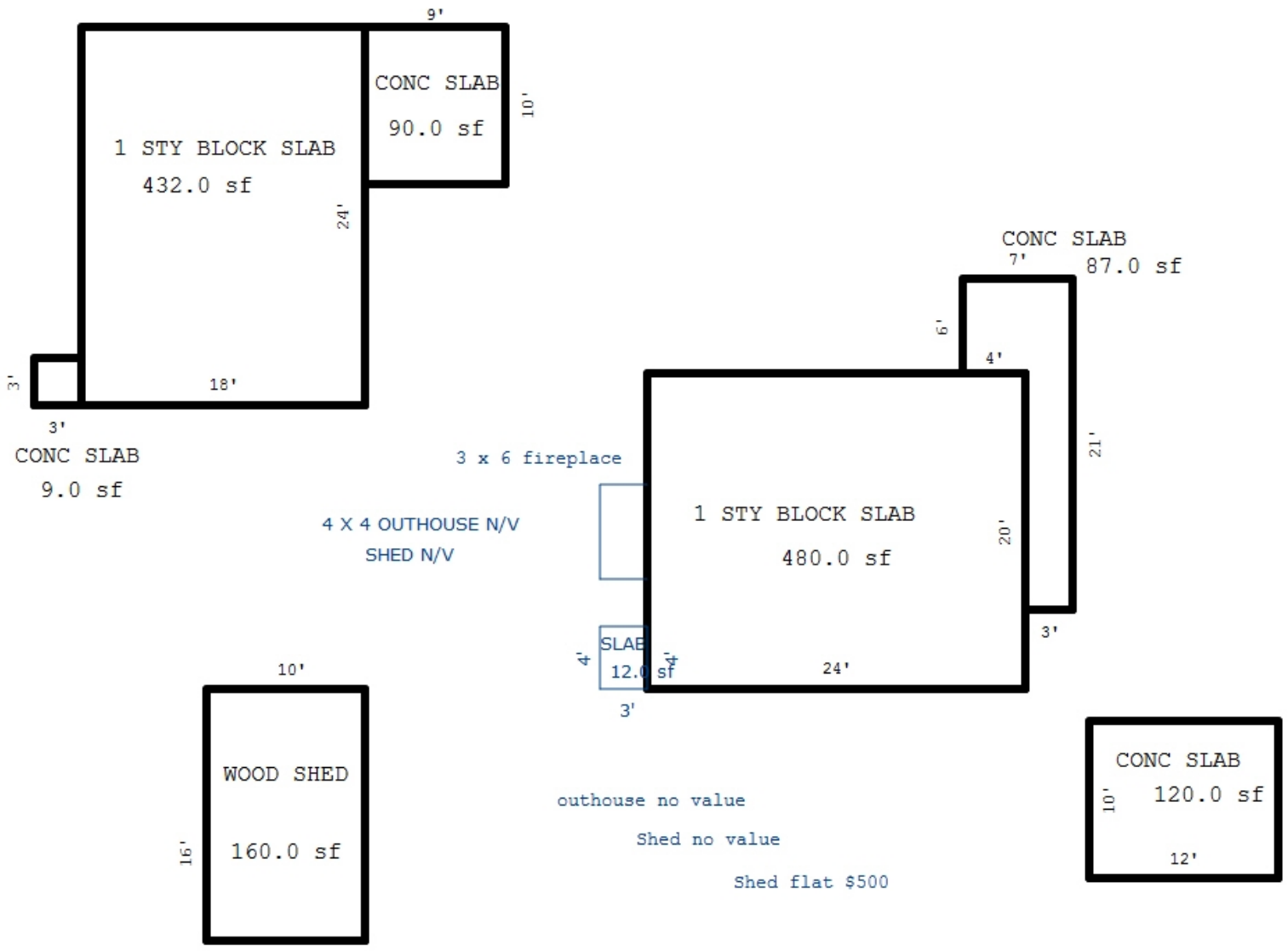

Sketch by Apex Sketch

*** Information herein deemed reliable but not guaranteed***

Building Type

X	Single Family
	Mobile Home
	Town Home
	Duplex
	A-Frame
X	Wood Frame

Building Style: CABIN

Yr Built	Remodeled
0	0

Condition: Fair

Room List

	Basement
	1st Floor
	2nd Floor
	Bedrooms

(1) Exterior

X	Wood/Shingle
	Aluminum/Vinyl
	Brick
	Insulation

(2) Windows

X	Many Avg. Few	X	Large Avg. Small

Wood Sash
Metal Sash
Vinyl Sash
Double Hung
Horiz. Slide
Casement
Double Glass
Patio Doors
Storms & Screens

(3) Roof

X	Gable		Gambrel
	Hip		Mansard
	Flat		Shed

X	Asphalt Shingle

Chimney: Brick

(3) Roof (cont.)

	Eavestrough
	Insulation
0	Front Overhang
0	Other Overhang

(4) Interior

	Drywall		Plaster
	Paneled		Wood T&G

Trim & Decoration

	Ex	X	Ord		Min

Size of Closets

	Lg	X	Ord		Small

Doors:		Solid	X	H.C.	

(5) Floors

Kitchen:
Other:
Other:

(6) Ceilings

(7) Excavation

Basement: 0 S.F.
Crawl: 0 S.F.
Slab: 432 S.F.
Height to Joists: 0.0

(8) Basement

	Conc. Block
	Poured Conc.
	Stone
	Treated Wood
	Concrete Floor

(9) Basement Finish

	Recreation SF
	Living SF
	Walkout Doors (B)
	No Floor SF
	Walkout Doors (A)

(10) Floor Support

Joists:
Unsupported Len:
Cntr.Sup:

(11) Heating/Cooling

X	Gas		Oil		Elec.
	Wood		Coal		Steam

	Forced Air w/o Ducts
	Forced Air w/ Ducts
	Forced Hot Water
	Electric Baseboard
	Elec. Ceil. Radiant
	Radiant (in-floor)
	Electric Wall Heat
X	Space Heater
	Wall/Floor Furnace
	Forced Heat & Cool
	Heat Pump
	No Heating/Cooling

	Central Air
	Wood Furnace

(12) Electric

0	Amps Service

No./Qual. of Fixtures

	Ex.	X	Ord.		Min

No. of Elec. Outlets

	Many	X	Ave.		Few

(13) Plumbing

1	Average Fixture(s)
	3 Fixture Bath
	2 Fixture Bath
	Softener, Auto
	Softener, Manual
	Solar Water Heat
	No Plumbing
	Extra Toilet
	Extra Sink
	Separate Shower
	Ceramic Tile Floor
	Ceramic Tile Wains
	Ceramic Tub Alcove
	Vent Fan

(14) Water/Sewer

	Public Water
	Public Sewer
	Water Well
	1000 Gal Septic
	2000 Gal Septic

Lump Sum Items:

(15) Built-ins

	Appliance Allow.
	Cook Top
	Dishwasher
	Garbage Disposal
	Bath Heater
	Vent Fan
	Hot Tub
	Unvented Hood
	Vented Hood
	Intercom
	Jacuzzi Tub
	Jacuzzi repl.Tub
	Oven
	Microwave
	Standard Range
	Self Clean Range
	Sauna
	Trash Compactor
	Central Vacuum
	Security System

(15) Fireplaces

	Interior 1 Story
	Interior 2 Story
	2nd/Same Stack
	Two Sided
	Exterior 1 Story
	Exterior 2 Story
	Prefab 1 Story
	Prefab 2 Story
	Heat Circulator
	Raised Hearth
	Wood Stove
	Direct-Vented Gas

Class: D
Effec. Age: 57
Floor Area: 432
Total Base New : 52,655 E.C.F.
Total Depr Cost: 23,694 X 1.297
Estimated T.C.V: 30,731

(16) Porches/Decks

Area	Type
90	CPP
9	CPP

(17) Garage

Year Built:
Car Capacity:
Class:
Exterior:
Brick Ven.:
Stone Ven.:
Common Wall:
Foundation:
Finished ?:
Auto. Doors:
Mech. Doors:
Area:
% Good:
Storage Area:
No Conc. Floor:

Bsmnt Garage:

Carport Area:
Roof:

Cost Est. for Res. Bldg: 2 Single Family CABIN Cls D Blt 0
(11) Heating System: Space Heater
Ground Area = 432 SF Floor Area = 432 SF.
Phy/Ab.Phy/Func/Econ/Comb. % Good=45/100/100/100/45
Building Areas

Stories	Exterior	Foundation	Size	Cost New	Depr. Cost
1 Story	Block	Slab	432		
			Total:	51,888	23,349
Other Additions/Adjustments					
Porches					
CPP			90	1,526	687
Foundation: Shallow			90	-837	-377
CPP			9	78	35
			Totals:	52,655	23,694

Notes:

ECF (RESIDENTIAL) 1.297 => TCV: 30,731

*** Information herein deemed reliable but not guaranteed***

Parcel Number: 2410-20-4401 Jurisdiction: GREENWOOD TWP County: WEXFORD Printed on 02/15/2024

Grantor	Grantee	Sale Price	Sale Date	Inst. Type	Terms of Sale	Liber & Page	Verified By	Prcnt. Trans.
SCRUGGS, WALLACE F. JR.	CHRISTUNAS, DANIEL C.	19,000	06/30/1990	LC	03-ARM'S LENGTH	320:983	DEED	0.0

Property Address

KOLARVIC RD

Owner's Name/Address

CHRISTUNAS, DANIEL C.
& DAVID A. CHRISTUNAS
2040 KOLARVIC RD
MANTON MI 49663

Tax Description

SE 1/4 OF SE 1/4 40 A. GW. SEC. 20 T24N R10W -MANTON-

Comments/Influences

The Equalizer. Copyright (c) 1999 - 2009. Licensed To: Township of Greenwood, County of Wexford, Michigan

Class: RESIDENTIAL-IMPROV Zoning:

School: MANTON CONSOLIDATED SCHOOLS

P.R.E. 100% 03/30/2023

:

2024 Est TCV 116,797 TCV/TFA: 0.00

Building Permit(s)	Date	Number	Status

X Improved | Vacant

	Public Improvements
X	Dirt Road
	Gravel Road
	Paved Road
	Storm Sewer
	Sidewalk
	Water
	Sewer
	Electric
	Gas
	Curb
	Street Lights
	Standard Utilities
	Underground Utils.

	Topography of Site
	Level
X	Rolling
	Low
	High
	Landscaped
	Swamp
X	Wooded
	Pond
	Waterfront
	Ravine
	Wetland
	Flood Plain

Who	When	What
GLA	05/30/2017	INSPECTION

Land Value Estimates for Land Table 4010.LAND VALUES

Description	Frontage	Depth	* Factors * Front	Depth	Rate	%Adj.	Reason	Value
ACREAGE			40.000 Acres		2,722	100		108,880
			40.00 Total Acres		Total Est. Land Value =			108,880

Land Improvement Cost Estimates

Description	Rate	Size	% Good	Cash Value
Wood Frame	35.33	64	44	995
Total Estimated Land Improvements True Cash Value =				995

Year	Land Value	Building Value	Assessed Value	Board of Review	Tribunal/ Other	Taxable Value
2024	54,400	4,000	58,400			22,557C
2023	48,000	3,300	51,300			21,483C
2022	38,000	2,800	40,800		40,800A	20,460C
2021	34,000	25,400	59,400	39,200J	39,200A	19,806C

*** Information herein deemed reliable but not guaranteed***

Building Type

X	Single Family
	Mobile Home
	Town Home
	Duplex
	A-Frame
X	Wood Frame

Building Style: PLAIN

Yr Built	Remodeled
0	0

Condition: Average

Room List

	Basement
	1st Floor
	2nd Floor
	Bedrooms

(1) Exterior

	Wood/Shingle
X	Aluminum/Vinyl
	Brick
X	Insulation

(2) Windows

	Many		Large
X	Avg.	X	Avg.
	Few		Small

	Wood Sash
	Metal Sash
X	Vinyl Sash
	Double Hung
	Horiz. Slide
	Casement
	Double Glass
	Patio Doors
X	Storms & Screens

(3) Roof

X	Gable		Gambrel
	Hip		Mansard
	Flat		Shed

X	Asphalt Shingle

Chimney:

(3) Roof (cont.)

	Eavestrough
X	Insulation
0	Front Overhang
0	Other Overhang

(4) Interior

X	Drywall		Plaster
	Paneled		Wood T&G

Trim & Decoration

	Ex	X	Ord		Min

Size of Closets

	Lg	X	Ord		Small

Doors:		Solid	X	H.C.	

(5) Floors

Kitchen:
Other: Linoleum
Other: Carpeted

(6) Ceilings

X	Drywall		

(7) Excavation

Basement: 0 S.F.
Crawl: 0 S.F.
Slab: 0 S.F.
Height to Joists: 0.0

(8) Basement

	Conc. Block
	Poured Conc.
	Stone
	Treated Wood
	Concrete Floor

(9) Basement Finish

	Recreation SF
	Living SF
	Walkout Doors (B)
	No Floor SF
	Walkout Doors (A)

(10) Floor Support

Joists:
Unsupported Len:
Cntr.Sup:

(11) Heating/Cooling

X	Gas		Oil		Elec.
	Wood		Coal		Steam

	Forced Air w/o Ducts
X	Forced Air w/ Ducts
	Forced Hot Water
	Electric Baseboard
	Elec. Ceil. Radiant
	Radiant (in-floor)
	Electric Wall Heat
	Space Heater
	Wall/Floor Furnace
	Forced Heat & Cool
	Heat Pump
	No Heating/Cooling

	Central Air
	Wood Furnace

(12) Electric

150	Amps Service

No./Qual. of Fixtures

	Ex.	X	Ord.		Min

No. of Elec. Outlets

	Many	X	Ave.		Few

(13) Plumbing

1	Average Fixture(s)
	3 Fixture Bath
	2 Fixture Bath
	Softener, Auto
	Softener, Manual
	Solar Water Heat
	No Plumbing
	Extra Toilet
	Extra Sink
	Separate Shower
	Ceramic Tile Floor
	Ceramic Tile Wains
	Ceramic Tub Alcove
	Vent Fan

(14) Water/Sewer

	Public Water
	Public Sewer
1	Water Well
1	1000 Gal Septic
	2000 Gal Septic

Lump Sum Items:

(15) Built-ins

	Appliance Allow.
	Cook Top
	Dishwasher
	Garbage Disposal
	Bath Heater
	Vent Fan
	Hot Tub
	Unvented Hood
	Vented Hood
	Intercom
	Jacuzzi Tub
	Jacuzzi repl.Tub
	Oven
	Microwave
	Standard Range
	Self Clean Range
	Sauna
	Trash Compactor
	Central Vacuum
	Security System

(15) Fireplaces

	Interior 1 Story
	Interior 2 Story
	2nd/Same Stack
	Two Sided
	Exterior 1 Story
	Exterior 2 Story
	Prefab 1 Story
	Prefab 2 Story
	Heat Circulator
	Raised Hearth
	Wood Stove
	Direct-Vented Gas

Class: CD
Effec. Age: 48
Floor Area: 0
Total Base New : 10,262 E.C.F.
Total Depr Cost: 5,337 X 1.297
Estimated T.C.V: 6,922

(16) Porches/Decks

Area	Type

(17) Garage

Year Built:
Car Capacity:
Class:
Exterior:
Brick Ven.:
Stone Ven.:
Common Wall:
Foundation:
Finished ?:
Auto. Doors:
Mech. Doors:
Area:
% Good:
Storage Area:
No Conc. Floor:

Bsmnt Garage:

Carport Area:
Roof:

Cost Est. for Res. Bldg: 1 Single Family PLAIN Cls CD Blt 0
(11) Heating System: Forced Air w/ Ducts
Ground Area = 0 SF Floor Area = 0 SF.
Phy/Ab.Phy/Func/Econ/Comb. % Good=52/100/100/100/52
Building Areas

Stories	Exterior	Foundation	Size	Cost New	Depr. Cost
Other Additions/Adjustments					
Water/Sewer					
1000 Gal Septic			1	4,582	2,383
Water Well, 100 Feet			1	5,680	2,954
			Totals:	10,262	5,337

Notes:
ECF (RESIDENTIAL) 1.297 => TCV: 6,922

*** Information herein deemed reliable but not guaranteed***

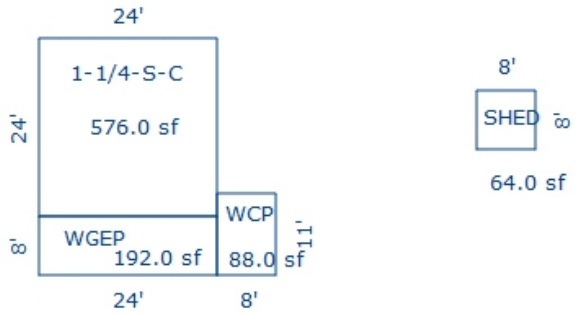

Sketch by Apex Sketch

*** Information herein deemed reliable but not guaranteed***

Parcel Number: 2410-21-1101 Jurisdiction: GREENWOOD TWP County: WEXFORD Printed on 02/15/2024

Grantor	Grantee	Sale Price	Sale Date	Inst. Type	Terms of Sale	Liber & Page	Verified By	Prcnt. Trans.

Property Address	Class: AGRICULTURAL-VACAN	Zoning:	Building Permit(s)	Date	Number	Status
	School: MANTON CONSOLIDATED SCHOOLS					
Owner's Name/Address	P.R.E. 0%					
	:					
STATE OF MICHIGAN P O BOX 30735 GRANTS ADMINISTRATION LANSING MI 48909-8235	2024 Est TCV 0					

Improved | X | Vacant

Public Improvements

Dirt Road
Gravel Road
Paved Road
Storm Sewer
Sidewalk
Water
Sewer
Electric
Gas
Curb
Street Lights
Standard Utilities
Underground Utils.

Topography of Site

Level
Rolling
Low
High
Landscaped
Swamp
Wooded
Pond
Waterfront
Ravine
Wetland
Flood Plain

Who When What

GLA 05/30/2017 INSPECTION

Tax Description

E 1/2 OF NE 1/4; SE 1/4; E 1/2 OF NW 1/4; NW 1/4 OF NW 1/4; SW 1/4 OF SW 1/4 400 A. GW. SEC. 21 T24N R10W -MANTON-

Comments/Influences

Land Value Estimates for Land Table 4010.LAND VALUES

Description	Frontage	Depth	* Factors * Front	Depth	Rate	%Adj.	Reason	Value
ACREAGE			395.000 Acres		2,480	100		979,600
			5.000 Acres		0	100		0
			400.00 Total Acres		Total Est. Land Value =			979,600

Year	Land Value	Building Value	Assessed Value	Board of Review	Tribunal/ Other	Taxable Value
2024	EXEMPT	EXEMPT	EXEMPT			EXEMPT
2023	EXEMPT	EXEMPT	EXEMPT			EXEMPT
2022	0	0	0			0
2021	0	0	0			0

The Equalizer. Copyright (c) 1999 - 2009. Licensed To: Township of Greenwood, County of Wexford, Michigan

*** Information herein deemed reliable but not guaranteed***

Parcel Number: 2410-21-1201 Jurisdiction: GREENWOOD TWP County: WEXFORD Printed on 02/15/2024

Grantor	Grantee	Sale Price	Sale Date	Inst. Type	Terms of Sale	Liber & Page	Verified By	Prcnt. Trans.

Property Address	Class: AGRICULTURAL-VACAN	Zoning:	Building Permit(s)	Date	Number	Status
	School: MANTON CONSOLIDATED SCHOOLS					
Owner's Name/Address	P.R.E. 0%					
	:					
STATE OF MICHIGAN P O BOX 30735 GRANTS ADMINISTRATION LANSING MI 48909-8235	2024 Est TCV 0					

Improved | X | Vacant

Land Value Estimates for Land Table 4010.LAND VALUES

Description	Frontage	Depth	* Factors * Front	Depth	Rate	%Adj.	Reason	Value
ACREAGE			27.850 Acres		2,722	100		75,808
			0.710 Acres		0	100		0
			28.56 Total Acres		Total Est. Land Value =			75,808

Tax Description

NW 1/4 OF NE 1/4 EXC E 126.39 FT & EXC W 252.45 FT. --28.56 A. M/L-- GW. SEC. 21 T24N R10W -MANTON-

Comments/Influences

Public Improvements

Dirt Road
Gravel Road
Paved Road
Storm Sewer
Sidewalk
Water
Sewer
Electric
Gas
Curb
Street Lights
Standard Utilities
Underground Utils.

Topography of Site

Level
Rolling
Low
High
Landscaped
Swamp
Wooded
Pond
Waterfront
Ravine
Wetland
Flood Plain

Who When What

GLA 05/30/2017 INSPECTION

Year	Land Value	Building Value	Assessed Value	Board of Review	Tribunal/ Other	Taxable Value
2024	EXEMPT	EXEMPT	EXEMPT			EXEMPT
2023	EXEMPT	EXEMPT	EXEMPT			EXEMPT
2022	0	0	0			0
2021	26,100	0	26,100			9,503C

The Equalizer. Copyright (c) 1999 - 2009. Licensed To: Township of Greenwood, County of Wexford, Michigan

*** Information herein deemed reliable but not guaranteed***

Parcel Number: 2410-21-1202 Jurisdiction: GREENWOOD TWP County: WEXFORD Printed on 02/15/2024

Grantor	Grantee	Sale Price	Sale Date	Inst. Type	Terms of Sale	Liber & Page	Verified By	Prcnt. Trans.

Property Address

Class: AGRICULTURAL-VACAN Zoning:

School: MANTON CONSOLIDATED SCHOOLS

P.R.E. 100% / /

:

2024 Est TCV 65,303

Building Permit(s)	Date	Number	Status

Owner's Name/Address

MICHIGAN DEPT OF
P O BOX 30735
GRANTS ADMINISTRATION
LANSING MI 48909-8235

Improved | X | Vacant

Public Improvements

Dirt Road
Gravel Road
Paved Road
Storm Sewer
Sidewalk
Water
Sewer
Electric
Gas
Curb
Street Lights
Standard Utilities
Underground Utils.

Topography of Site

Level
Rolling
Low
High
Landscaped
Swamp
Wooded
Pond
Waterfront
Ravine
Wetland
Flood Plain

Who When What

GLA 05/30/2017 INSPECTION

Land Value Estimates for Land Table 4010.LAND VALUES

Description	Frontage	Depth	* Factors * Front	Depth	Rate	%Adj.	Reason	Value
ACREAGE			21.609 Acres		3,022	100		65,303
ROW			0.191 Acres		0	100		0
			21.80 Total Acres		Total Est. Land Value =			65,303

Tax Description

E 126.39 FT & W 252.45 FT OF NW 1/4 OF NE 1/4; ALSO N 423.39 FT OF E 1/2 OF SW 1/4 EXC W 466.69 FT OF N 233.35 FT. --21.8 A. M/L-- GW. SEC. 21 T24N R10W -MANTON- SEE ACT 513 ROLL FOR VALUE

Comments/Influences

Year	Land Value	Building Value	Assessed Value	Board of Review	Tribunal/ Other	Taxable Value
2024	32,700	0	32,700			6,579C
2023	27,700	0	27,700			6,266C
2022	23,800	0	23,800			5,968C
2021	21,600	0	21,600			5,778C

The Equalizer. Copyright (c) 1999 - 2009. Licensed To: Township of Greenwood, County of Wexford, Michigan

*** Information herein deemed reliable but not guaranteed***

Parcel Number: 2410-21-1301 Jurisdiction: GREENWOOD TWP County: WEXFORD Printed on 02/15/2024

Grantor	Grantee	Sale Price	Sale Date	Inst. Type	Terms of Sale	Liber & Page	Verified By	Prcnt. Trans.
GRAMLICH, WILLIAM R. & JAN	GRAMLICH FAMILY TRUST	0	07/28/2011	QC	14-INTO/OUT OF TRUST	641/582	DEED	0.0
STEHOUWER, GARY	GRAMLICH, WM. & JANET	17,900	12/08/1995	WD	03-ARM'S LENGTH	347:280	DEED	0.0

Property Address

Owner's Name/Address

GRAMLICH FAMILY TRUST
WILLAIM & JANET GRAMLICH LE
2681 N. 35TH ST.
GALESBURG MI 49053

Tax Description

SW 1/4 OF NE 1/4 40 A. GW. SEC. 21 T24N R10W -MANTON-

Comments/Influences

The Equalizer. Copyright (c) 1999 - 2009. Licensed To: Township of Greenwood, County of Wexford, Michigan

Class: RESIDENTIAL-VACANT Zoning:

School: MANTON CONSOLIDATED SCHOOLS

P.R.E. 0%

:

2024 Est TCV 108,880

Building Permit(s)	Date	Number	Status

	Improved	X	Vacant

	Public Improvements
X	Dirt Road
	Gravel Road
	Paved Road
	Storm Sewer
	Sidewalk
	Water
	Sewer
X	Electric
	Gas
	Curb
	Street Lights
	Standard Utilities
	Underground Utils.

	Topography of Site
	Level
	Rolling
	Low
	High
	Landscaped
	Swamp
X	Wooded
	Pond
	Waterfront
	Ravine
	Wetland
	Flood Plain

Who	When	What
GLA	05/30/2017	INSPECTION

Land Value Estimates for Land Table 4010.LAND VALUES

Description	Frontage	Depth	* Factors * Front	Depth	Rate	%Adj.	Reason	Value
ACREAGE			40.000 Acres		2,722	100		108,880
			40.00 Total Acres		Total Est. Land Value =			108,880

Year	Land Value	Building Value	Assessed Value	Board of Review	Tribunal/ Other	Taxable Value
2024	54,400	0	54,400			12,584C
2023	48,000	0	48,000			11,985C
2022	38,000	0	38,000			11,415C
2021	34,000	0	34,000			11,051C

*** Information herein deemed reliable but not guaranteed***

Parcel Number: 2410-21-2301 Jurisdiction: GREENWOOD TWP County: WEXFORD Printed on 02/15/2024

Grantor	Grantee	Sale Price	Sale Date	Inst. Type	Terms of Sale	Liber & Page	Verified By	Prcnt. Trans.
KOLAROVIC, ROSE LE & JOANN	KOLAROVIC, ROSE LE & JOANN	0	11/28/2011	QC	18-LIFE ESTATE	643/2802	DEED	0.0
KOLAROVIC, ROSE	KOLAROVIC, ROSE LE & JOANN	0	07/31/2009	QC	18-LIFE ESTATE	623/966	DEED	0.0

Property Address
2076 KOLARVIC RD

Owner's Name/Address
CERKA, JOANN
2076 KOLAROVIC RD
MANTON MI 49663

Tax Description
SW 1/4 OF NW 1/4 40 A. GW. SEC. 21 T24N R10W -MANTON-

Comments/Influences

Class: RESIDENTIAL-IMPROV Zoning:
School: MANTON CONSOLIDATED SCHOOLS
P.R.E. 100% / /
:
2024 Est TCV 274,751 TCV/TFA: 166.01

Building Permit(s)	Date	Number	Status

X Improved | Vacant

Public Improvements

	Dirt Road
X	Gravel Road
	Paved Road
	Storm Sewer
	Sidewalk
	Water
	Sewer
X	Electric
	Gas
	Curb
	Street Lights
	Standard Utilities
	Underground Utils.

Topography of Site

X	Level
	Rolling
	Low
	High
	Landscaped
	Swamp
X	Wooded
	Pond
	Waterfront
	Ravine
	Wetland
	Flood Plain
X	OPEN/PINES

Who	When	What
GLA	05/30/2017	INSPECTION
GLA	08/01/2014	INSPECTION

Land Value Estimates for Land Table 4010.LAND VALUES

Description	Frontage	Depth	* Factors * Front	Depth	Rate	%Adj.	Reason	Value
ACREAGE			40.000 Acres		2,722	100		108,880
			40.00 Total Acres		Total Est. Land Value =			108,880

Land Improvement Cost Estimates

Description	Rate	Size	% Good	Cash Value
D/W/P: 4in Concrete	6.11	412	45	1,133
Total Estimated Land Improvements True Cash Value =				1,133

Year	Land Value	Building Value	Assessed Value	Board of Review	Tribunal/ Other	Taxable Value
2024	54,400	83,000	137,400			41,147C
2023	48,000	68,100	116,100			39,188C
2022	38,000	57,900	95,900			37,322C
2021	34,000	58,800	92,800			36,130C

The Equalizer. Copyright (c) 1999 - 2009.
Licensed To: Township of Greenwood, County of Wexford, Michigan

*** Information herein deemed reliable but not guaranteed***

Building Type

X	Single Family
	Mobile Home
	Town Home
	Duplex
	A-Frame
X	Wood Frame

Building Style: PLAIN

Yr Built	Remodeled
0	1975

Condition: Good

Room List

	Basement
	1st Floor
	2nd Floor
	Bedrooms

(1) Exterior

X	Wood/Shingle
	Aluminum/Vinyl
	Brick
X	Insulation

(2) Windows

	Many		Large
X	Avg.	X	Avg.
	Few		Small

X	Wood Sash
	Metal Sash
	Vinyl Sash
	Double Hung
	Horiz. Slide
	Casement
	Double Glass
	Patio Doors
X	Storms & Screens

(3) Roof

X	Gable		Gambrel
	Hip		Mansard
	Flat		Shed

X	Asphalt Shingle

Chimney:

(3) Roof (cont.)

	Eavestrough
X	Insulation
0	Front Overhang
0	Other Overhang

(4) Interior

X	Drywall		Plaster
	Paneled		Wood T&G

Trim & Decoration

	Ex	X	Ord		Min

Size of Closets

	Lg	X	Ord		Small

Doors:		Solid	X	H.C.	

(5) Floors

Kitchen:
Other: Linoleum
Other: Carpeted

(6) Ceilings

X	Drywall

(7) Excavation

Basement: 680 S.F.
Crawl: 975 S.F.
Slab: 0 S.F.
Height to Joists: 0.0

(8) Basement

	Conc. Block
	Poured Conc.
	Stone
	Treated Wood
	Concrete Floor

(9) Basement Finish

	Recreation SF
	Living SF
	Walkout Doors (B)
	No Floor SF
	Walkout Doors (A)

(10) Floor Support

Joists:
Unsupported Len:
Cntr.Sup:

(11) Heating/Cooling

X	Gas		Oil		Elec.
	Wood		Coal		Steam

	Forced Air w/o Ducts
X	Forced Air w/ Ducts
	Forced Hot Water
	Electric Baseboard
	Elec. Ceil. Radiant
	Radiant (in-floor)
	Electric Wall Heat
	Space Heater
	Wall/Floor Furnace
	Forced Heat & Cool
	Heat Pump
	No Heating/Cooling

	Central Air
	Wood Furnace

(12) Electric

150	Amps Service

No./Qual. of Fixtures

	Ex.	X	Ord.		Min

No. of Elec. Outlets

	Many	X	Ave.		Few

(13) Plumbing

1	Average Fixture(s)
	3 Fixture Bath
	2 Fixture Bath
	Softener, Auto
	Softener, Manual
	Solar Water Heat
	No Plumbing
	Extra Toilet
	Extra Sink
	Separate Shower
	Ceramic Tile Floor
	Ceramic Tile Wains
	Ceramic Tub Alcove
	Vent Fan

(14) Water/Sewer

	Public Water
	Public Sewer
1	Water Well
1	1000 Gal Septic
	2000 Gal Septic

Lump Sum Items:

(15) Built-ins

	Appliance Allow.
	Cook Top
	Dishwasher
	Garbage Disposal
	Bath Heater
	Vent Fan
	Hot Tub
	Unvented Hood
	Vented Hood
	Intercom
	Jacuzzi Tub
	Jacuzzi repl.Tub
	Oven
	Microwave
	Standard Range
	Self Clean Range
	Sauna
	Trash Compactor
	Central Vacuum
	Security System

(15) Fireplaces

	Interior 1 Story
	Interior 2 Story
	2nd/Same Stack
	Two Sided
	Exterior 1 Story
	Exterior 2 Story
	Prefab 1 Story
	Prefab 2 Story
	Heat Circulator
	Raised Hearth
	Wood Stove
	Direct-Vented Gas

Class: D
Effec. Age: 49
Floor Area: 1,655
Total Base New : 249,051 E.C.F.
Total Depr Cost: 127,015 X 1.297
Estimated T.C.V: 164,738

(16) Porches/Decks

Area	Type
312	WGEP (1 Story)
329	CCP (1 Story)
16	WCP (1 Story)
12	WCP (1 Story)
6	WCP (1 Story)

(17) Garage

Year Built:
Car Capacity:
Class: D
Exterior: Siding
Brick Ven.: 0
Stone Ven.: 0
Common Wall: 1/2 Wal
Foundation: 18 Inch
Finished ?:
Auto. Doors: 0
Mech. Doors: 0
Area: 1440
% Good: 0
Storage Area: 0
No Conc. Floor: 0

Bsmnt Garage:

Carport Area:
Roof:

Cost Est. for Res. Bldg: 1 Single Family PLAIN Cls D Blt 0
(11) Heating System: Forced Air w/ Ducts
Ground Area = 1655 SF Floor Area = 1655 SF.
Phy/Ab.Phy/Func/Econ/Comb. % Good=51/100/100/100/51
Building Areas

Stories	Exterior	Foundation	Size	Cost New	Depr. Cost
1 Story	Siding	Basement	680		
1 Story	Siding	Crawl Space	975		
			Total:	177,033	90,286
Other Additions/Adjustments					
Water/Sewer					
1000 Gal Septic			1	4,293	2,189
Water Well, 100 Feet			1	5,545	2,828
Porches					
WGEP (1 Story)			312	17,210	8,777
CCP (1 Story)			329	6,721	3,428
WCP (1 Story)			16	1,067	544
WCP (1 Story)			12	800	408
WCP (1 Story)			6	400	204
Garages					
Class: D Exterior: Siding Foundation: 18 Inch (Unfinished)					
Common Wall: 1/2 Wall			1	-925	-472
Base Cost			1440	36,907	18,823
			Totals:	249,051	127,015

Notes:
ECF (RESIDENTIAL) 1.297 => TCV: 164,738

*** Information herein deemed reliable but not guaranteed***

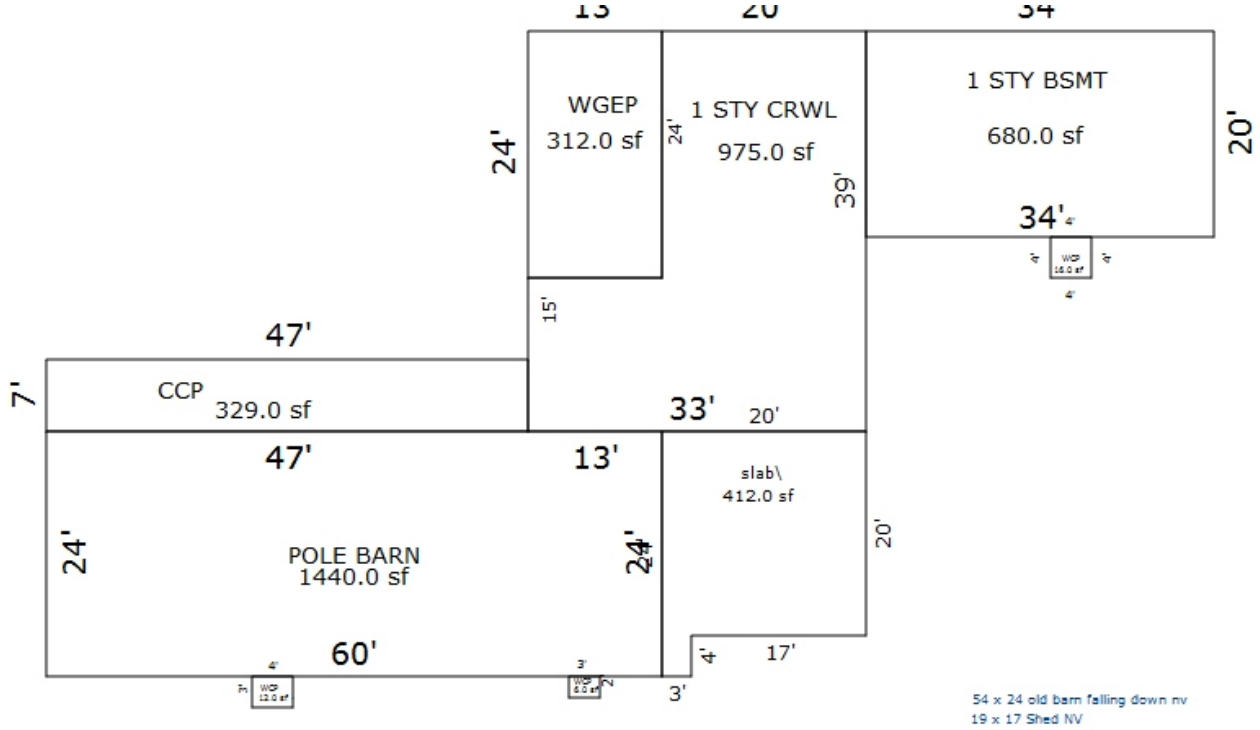

Sketch by Apex Sketch

*** Information herein deemed reliable but not guaranteed***

Parcel Number: 2410-21-3101 Jurisdiction: GREENWOOD TWP County: WEXFORD Printed on 02/15/2024

Grantor	Grantee	Sale Price	Sale Date	Inst. Type	Terms of Sale	Liber & Page	Verified By	Prcnt. Trans.

Property Address	Class: AGRICULTURAL-VACAN	Zoning:	Building Permit(s)	Date	Number	Status
	School: MANTON CONSOLIDATED SCHOOLS					
Owner's Name/Address	P.R.E. 0%					
	:					
STATE OF MICHIGAN P O BOX 30735 GRANTS ADMINISTRATION LANSING MI 48909-8235	2024 Est TCV 0					

Improved | X | Vacant

Land Value Estimates for Land Table 4010.LAND VALUES

Description	Frontage	Depth	* Factors * Front	Depth	Rate	%Adj.	Reason	Value
ACREAGE			67.520 Acres		2,596	100		175,310
			67.52 Total Acres		Total Est. Land Value =			175,310

Public Improvements

- Dirt Road
- Gravel Road
- Paved Road
- Storm Sewer
- Sidewalk
- Water
- Sewer
- Electric
- Gas
- Curb
- Street Lights
- Standard Utilities
- Underground Utils.

Topography of Site

- Level
- Rolling
- Low
- High
- Landscaped
- Swamp
- Wooded
- Pond
- Waterfront
- Ravine
- Wetland
- Flood Plain

Tax Description

E 1/2 OF SW 1/4 EXC N 423.39 FT. --67.52 A M/L-- GW. SEC. 21 T24N R10W -MANTON-

Comments/Influences

Who	When	What
GLA	05/30/2017	INSPECTION

Year	Land Value	Building Value	Assessed Value	Board of Review	Tribunal/ Other	Taxable Value
2024	EXEMPT	EXEMPT	EXEMPT			EXEMPT
2023	EXEMPT	EXEMPT	EXEMPT			EXEMPT
2022	0	0	0			0
2021	0	0	0			0

The Equalizer. Copyright (c) 1999 - 2009. Licensed To: Township of Greenwood, County of Wexford, Michigan

*** Information herein deemed reliable but not guaranteed***

Parcel Number: 2410-21-3102 Jurisdiction: GREENWOOD TWP County: WEXFORD Printed on 02/15/2024

Grantor	Grantee	Sale Price	Sale Date	Inst. Type	Terms of Sale	Liber & Page	Verified By	Prcnt. Trans.

Property Address	Class: RESIDENTIAL-IMPROV	Zoning:	Building Permit(s)	Date	Number	Status
2230 KOLARVIC RD	School: MANTON CONSOLIDATED SCHOOLS					
	P.R.E. 100% 05/17/2021					
Owner's Name/Address	:					
DEAN, THOMAS E. 2230 KOLARVIC RD MANTON MI 49663	2024 Est TCV 116,182 TCV/TFA: 145.23					

X Improved | Vacant

Land Value Estimates for Land Table 4010.LAND VALUES

Description	Frontage	Depth	* Factors * Front	Depth	Rate	%Adj.	Reason	Value
ACREAGE			2.500 Acres		5,546	100		13,865
			2.50 Total Acres		Total Est. Land Value =			13,865

Land Improvement Cost Estimates

Description	Rate	Size	% Good	Cash Value
Wood Frame	21.55	144	57	1,769
Wood Frame	19.35	240	57	2,647
Total Estimated Land Improvements True Cash Value =				4,416

Public Improvements

- X Dirt Road
- Gravel Road
- Paved Road
- Storm Sewer
- Sidewalk
- Water
- Sewer
- X Electric
- Gas
- Curb
- Street Lights
- Standard Utilities
- Underground Utils.

Topography of Site

- X Level
- X Rolling
- X Low
- High
- Landscaped
- Swamp
- X Wooded
- Pond
- Waterfront
- Ravine
- Wetland
- Flood Plain

Tax Description

N 233.35 FT OF W 466.69 FT OF E 1/2 OF SW 1/4 --2.5 A M/L-- GW. SEC. 21 T24N R10W -MANTON-

Comments/Influences

Who	When	What
GLA	05/30/2017	INSPECTION

Year	Land Value	Building Value	Assessed Value	Board of Review	Tribunal/ Other	Taxable Value
2024	6,900	51,200	58,100			30,404C
2023	6,900	42,400	49,300			28,957C
2022	5,600	36,300	41,900			27,579C
2021	5,300	36,900	42,200			26,698C

The Equalizer. Copyright (c) 1999 - 2009. Licensed To: Township of Greenwood, County of Wexford, Michigan

*** Information herein deemed reliable but not guaranteed***

Building Type

X	Single Family
	Mobile Home
	Town Home
	Duplex
	A-Frame
X	Wood Frame

Building Style: PLAIN

Yr Built	Remodeled
0	1980

Condition: Good

Room List

	Basement
	1st Floor
	2nd Floor
	Bedrooms

(1) Exterior

X	Wood/Shingle
	Aluminum/Vinyl
	Brick
X	Insulation

(2) Windows

	Many		Large
X	Avg.	X	Avg.
	Few		Small

X	Wood Sash
	Metal Sash
	Vinyl Sash
	Double Hung
	Horiz. Slide
	Casement
	Double Glass
	Patio Doors
X	Storms & Screens

(3) Roof

X	Gable		Gambrel
	Hip		Mansard
	Flat		Shed

X	Asphalt Shingle

Chimney:

(3) Roof (cont.)

	Eavestrough
X	Insulation
0	Front Overhang
0	Other Overhang

(4) Interior

X	Drywall		Plaster
	Paneled		Wood T&G

Trim & Decoration

	Ex	X	Ord		Min

Size of Closets

	Lg	X	Ord		Small

Doors:		Solid	X	H.C.	

(5) Floors

Kitchen:
Other: Linoleum
Other: Carpeted

(6) Ceilings

X	Drywall		

(7) Excavation

Basement: 800 S.F.
Crawl: 0 S.F.
Slab: 0 S.F.
Height to Joists: 0.0

(8) Basement

	Conc. Block
	Poured Conc.
	Stone
	Treated Wood
	Concrete Floor

(9) Basement Finish

	Recreation SF
	Living SF
	Walkout Doors (B)
	No Floor SF
	Walkout Doors (A)

(10) Floor Support

Joists:
Unsupported Len:
Cntr.Sup:

(11) Heating/Cooling

X	Gas		Oil		Elec.
	Wood		Coal		Steam

	Forced Air w/o Ducts
X	Forced Air w/ Ducts
	Forced Hot Water
	Electric Baseboard
	Elec. Ceil. Radiant
	Radiant (in-floor)
	Electric Wall Heat
	Space Heater
	Wall/Floor Furnace
	Forced Heat & Cool
	Heat Pump
	No Heating/Cooling

	Central Air
	Wood Furnace

(12) Electric

150	Amps Service

No./Qual. of Fixtures

	Ex.	X	Ord.		Min

No. of Elec. Outlets

	Many	X	Ave.		Few

(13) Plumbing

1	Average Fixture(s)
	3 Fixture Bath
	2 Fixture Bath
	Softener, Auto
	Softener, Manual
	Solar Water Heat
	No Plumbing
	Extra Toilet
	Extra Sink
	Separate Shower
	Ceramic Tile Floor
	Ceramic Tile Wains
	Ceramic Tub Alcove
	Vent Fan

(14) Water/Sewer

	Public Water
	Public Sewer
1	Water Well
1	1000 Gal Septic
	2000 Gal Septic

Lump Sum Items:
1

(15) Built-ins

	Appliance Allow.
	Cook Top
	Dishwasher
	Garbage Disposal
	Bath Heater
	Vent Fan
	Hot Tub
	Unvented Hood
	Vented Hood
	Intercom
	Jacuzzi Tub
	Jacuzzi repl.Tub
	Oven
	Microwave
	Standard Range
	Self Clean Range
	Sauna
	Trash Compactor
	Central Vacuum
	Security System

(15) Fireplaces

	Interior 1 Story
	Interior 2 Story
	2nd/Same Stack
	Two Sided
	Exterior 1 Story
	Exterior 2 Story
	Prefab 1 Story
	Prefab 2 Story
	Heat Circulator
	Raised Hearth
	Wood Stove
	Direct-Vented Gas

Class: D
Effec. Age: 44
Floor Area: 800
Total Base New : 136,289 E.C.F.
Total Depr Cost: 75,483 X 1.297
Estimated T.C.V: 97,901

(16) Porches/Decks

Area	Type
120	WGEP (1 Story)
152	WPP
16	WPP

(17) Garage

Year Built:
Car Capacity:
Class:
Exterior:
Brick Ven.:
Stone Ven.:
Common Wall:
Foundation:
Finished ?:
Auto. Doors:
Mech. Doors:
Area:
% Good:
Storage Area:
No Conc. Floor:

Bsmnt Garage:

Carport Area:
Roof:

Cost Est. for Res. Bldg: 1 Single Family PLAIN Cls D Blt 0
(11) Heating System: Forced Air w/ Ducts
Ground Area = 800 SF Floor Area = 800 SF.
Phy/Ab.Phy/Func/Econ/Comb. % Good=56/100/100/100/56
Building Areas

Stories	Exterior	Foundation	Size	Cost New	Depr. Cost	
1 Story	Siding	Basement	800			
			Total:	103,833	58,147	
Other Additions/Adjustments						
Water/Sewer						
1000 Gal Septic			1	4,293	2,404	
Water Well, 100 Feet			1	5,545	3,105	
Porches						
WGEP (1 Story)			120	9,244	5,177	
WPP			152	3,127	1,751	
WPP			16	758	424	
Local Cost Items						
SHED			464	3,619	1,592	*4
SHED #2			192	1,498	659	*4
SHED #3			240	1,872	824	*4
Lump Sum Items						
GENERATOR				2,500	1,400	
			Totals:	136,289	75,483	

Notes:
ECF (RESIDENTIAL) 1.297 => TCV: 97,901

*** Information herein deemed reliable but not guaranteed***

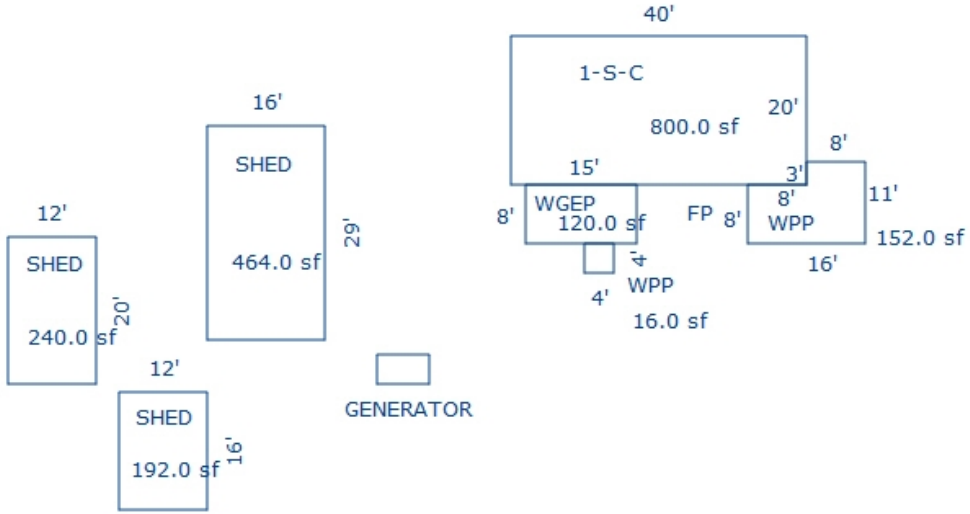

Sketch by Apex Sketch

*** Information herein deemed reliable but not guaranteed***

Parcel Number: 2410-21-3201-01 Jurisdiction: GREENWOOD TWP County: WEXFORD Printed on 02/15/2024

Grantor	Grantee	Sale Price	Sale Date	Inst. Type	Terms of Sale	Liber & Page	Verified By	Prcnt. Trans.

Property Address	Class: RESIDENTIAL-IMPROV	Zoning:	Building Permit(s)	Date	Number	Status
2040 KOLARVIC RD	School: MANTON CONSOLIDATED SCHOOLS		RESIDENTIAL - NEW	06/21/2021	PB21-0147	ENTERED
	P.R.E. 100% 03/27/2023					
Owner's Name/Address	: 248-497-8174					
	2024 Est TCV 295,487 TCV/TFA: 324.00					

CHRISTUNAS, DAVID A
& DANIEL CHRISTUNAS
2040 KOLARVIC RD
MANTON MI 49663

X Improved | | Vacant

Public Improvements

- Dirt Road
- Gravel Road
- Paved Road
- Storm Sewer
- Sidewalk
- Water
- Sewer
- Electric
- Gas
- Curb
- Street Lights
- Standard Utilities
- Underground Utils.

Topography of Site

- Level
- Rolling
- Low
- High
- Landscaped
- Swamp
- Wooded
- Pond
- Waterfront
- Ravine
- Wetland
- Flood Plain

Tax Description

NW 1/4 OF SW 1/4: 40 AC M/L-- GW. SEC. 21 T24N R10W -MANTON- COMBINED ON 01/14/2019 FROM 2410-21-3202, 2410-21-3201;

Comments/Influences

Split/Comb. on 01/14/2019 completed 01/14/2019 LINDA ;
Parent Parcel(s): 2410-21-3202, 2410-21-3201;
Child Parcel(s): 2410-21-3201-01;

Who	When	What
DB	10/23/2023	INSPECTION
GLA	11/01/2021	INSPECTION

Land Value Estimates for Land Table 4010.LAND VALUES

Description	Frontage	Depth	* Factors * Front	Depth	Rate	%Adj.	Reason	Value
ACREAGE			40.000 Acres		2,722	100		108,880
			40.00 Total Acres		Total Est. Land Value =			108,880

Land Improvement Cost Estimates

Description	Rate	Size	% Good	Cash Value
D/W/P: 3.5 Concrete	6.63	120	0	0
Total Estimated Land Improvements True Cash Value =				0

Year	Land Value	Building Value	Assessed Value	Board of Review	Tribunal/ Other	Taxable Value
2024	54,400	93,300	147,700			96,571C
2023	48,000	37,900	85,900			50,830C
2022	38,000	31,900	69,900		69,900A	48,410C
2021	34,000	9,400	43,400		43,400A	22,566C

The Equalizer. Copyright (c) 1999 - 2009.
Licensed To: Township of Greenwood, County of Wexford, Michigan

*** Information herein deemed reliable but not guaranteed***

Building Type

X	Single Family
	Mobile Home
	Town Home
	Duplex
	A-Frame
X	Wood Frame

Building Style: PLAIN

Yr Built	Remodeled
0	0

Condition: Good

Room List

	Basement
	1st Floor
	2nd Floor
	Bedrooms

(1) Exterior

	Wood/Shingle
X	Aluminum/Vinyl
	Brick
X	Insulation

(2) Windows

	Many		Large
X	Avg.	X	Avg.
	Few		Small

	Wood Sash
	Metal Sash
X	Vinyl Sash
	Double Hung
	Horiz. Slide
	Casement
	Double Glass
	Patio Doors
X	Storms & Screens

(3) Roof

X	Gable		Gambrel
	Hip		Mansard
	Flat		Shed

X	Asphalt Shingle

Chimney:

(3) Roof (cont.)

	Eavestrough
X	Insulation
0	Front Overhang
0	Other Overhang

(4) Interior

X	Drywall		Plaster
	Paneled		Wood T&G

Trim & Decoration

	Ex	X	Ord		Min

Size of Closets

	Lg	X	Ord		Small

Doors:		Solid	X	H.C.	

(5) Floors

Kitchen:
Other: Linoleum
Other: Carpeted

(6) Ceilings

X	Drywall		

(7) Excavation

Basement: 0 S.F.
Crawl: 912 S.F.
Slab: 0 S.F.
Height to Joists: 0.0

(8) Basement

	Conc. Block
	Poured Conc.
	Stone
	Treated Wood
	Concrete Floor

(9) Basement Finish

	Recreation SF
	Living SF
	Walkout Doors (B)
	No Floor SF
	Walkout Doors (A)

(10) Floor Support

Joists:
Unsupported Len:
Cntr.Sup:

(11) Heating/Cooling

X	Gas		Oil		Elec.
	Wood		Coal		Steam

	Forced Air w/o Ducts
X	Forced Air w/ Ducts
	Forced Hot Water
	Electric Baseboard
	Elec. Ceil. Radiant
	Radiant (in-floor)
	Electric Wall Heat
	Space Heater
	Wall/Floor Furnace
	Forced Heat & Cool
	Heat Pump
	No Heating/Cooling

	Central Air
	Wood Furnace

(12) Electric

150	Amps Service

No./Qual. of Fixtures

	Ex.	X	Ord.		Min

No. of Elec. Outlets

	Many	X	Ave.		Few

(13) Plumbing

	Average Fixture(s)
1	3 Fixture Bath
	2 Fixture Bath
	Softener, Auto
	Softener, Manual
	Solar Water Heat
	No Plumbing
	Extra Toilet
	Extra Sink
	Separate Shower
	Ceramic Tile Floor
	Ceramic Tile Wains
	Ceramic Tub Alcove
	Vent Fan

(14) Water/Sewer

	Public Water
	Public Sewer
1	Water Well
1	1000 Gal Septic
	2000 Gal Septic

Lump Sum Items:

(15) Built-ins

	Appliance Allow.
	Cook Top
	Dishwasher
	Garbage Disposal
	Bath Heater
	Vent Fan
	Hot Tub
	Unvented Hood
	Vented Hood
	Intercom
	Jacuzzi Tub
	Jacuzzi repl.Tub
	Oven
	Microwave
	Standard Range
	Self Clean Range
	Sauna
	Trash Compactor
	Central Vacuum
	Security System

(15) Fireplaces

	Interior 1 Story
	Interior 2 Story
	2nd/Same Stack
	Two Sided
	Exterior 1 Story
	Exterior 2 Story
	Prefab 1 Story
	Prefab 2 Story
	Heat Circulator
	Raised Hearth
	Wood Stove
	Direct-Vented Gas

Class: CD
Effec. Age: 4
Floor Area: 912
Total Base New : 149,870 E.C.F.
Total Depr Cost: 143,876 X 1.297
Estimated T.C.V: 186,607

(16) Porches/Decks

Area	Type
80	WCP (1 Story)

(17) Garage

Year Built:
Car Capacity:
Class: CD
Exterior: Pole
Brick Ven.: 0
Stone Ven.: 0
Common Wall: Detache
Foundation: 18 Inch
Finished ?:
Auto. Doors: 0
Mech. Doors: 0
Area: 1200
% Good: 0
Storage Area: 0
No Conc. Floor: 0

Bsmnt Garage:

Carport Area:
Roof:

Cost Est. for Res. Bldg: 1 Single Family PLAIN Cls CD Blt 0
(11) Heating System: Forced Air w/ Ducts
Ground Area = 912 SF Floor Area = 912 SF.
Phy/Ab.Phy/Func/Econ/Comb. % Good=96/100/100/100/96
Building Areas

Stories	Exterior	Foundation	Size	Cost New	Depr. Cost
1 Story	Siding	Crawl Space	912		
			Total:	109,652	105,266
Other Additions/Adjustments					
Water/Sewer					
1000 Gal Septic			1	4,582	4,399
Water Well, 100 Feet			1	5,680	5,453
Porches					
WCP (1 Story)			80	3,856	3,702
Garages					
Class: CD Exterior: Pole (Unfinished)					
Base Cost			1200	26,100	25,056
			Totals:	149,870	143,876

Notes:
ECF (RESIDENTIAL) 1.297 => TCV: 186,607

*** Information herein deemed reliable but not guaranteed***

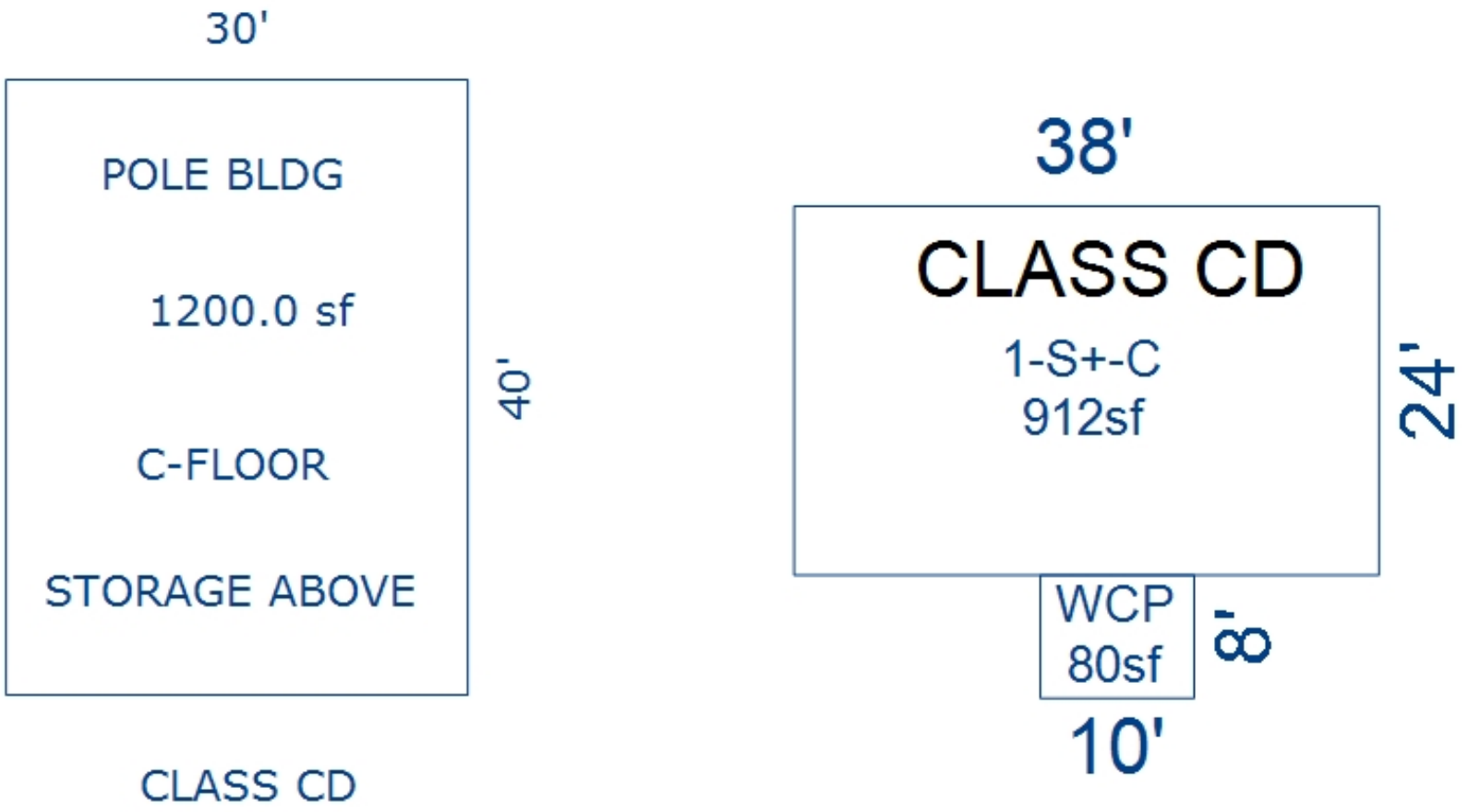

*** Information herein deemed reliable but not guaranteed***

Parcel Number: 2410-22-1101 Jurisdiction: GREENWOOD TWP County: WEXFORD Printed on 02/15/2024

Grantor	Grantee	Sale Price	Sale Date	Inst. Type	Terms of Sale	Liber & Page	Verified By	Prcnt. Trans.
PISZCZEK, KEVIN J & LISA M	PISZCZEK, KEVIN J & LISA M	100	04/04/2016	WD	14-INTO/OUT OF TRUST	677/1378	DEED	0.0
SCHILLEMAN, LORETTA R TRUS	SCHILLEMAN, LORETTA R ETAI	0	05/20/2013	WD	09-FAMILY	659/2620	DEED	0.0

Property Address

8781 N 33 RD

Owner's Name/Address

KAULE, JANE LE ETAL
& LORETTA SCHILLEMAN ETAL
3385 ALICE ST
WHITEHALL MI 49461

Tax Description

PAR COM AT N 1/4 COR OF SEC; TH E 1382.19 FT; S 625 FT; E 1163.80 FT; TO E SEC LINE; S 698.74 FT TO N 1/8 LINE; TH W 2580.23 FT TO N/S 1/4 LINE; TH N 1321.20 FT TO POB. AKA PAR "A" -61.37 A M/L- GW. SEC. 22 T24N R10W -MANTON-

Comments/Influences

Class: RESIDENTIAL-IMPROV Zoning:

School: MANTON CONSOLIDATED SCHOOLS

P.R.E. 0%

:

2024 Est TCV 287,420 TCV/TFA: 159.24

Building Permit(s)	Date	Number	Status

X Improved | Vacant

Public Improvements

- Dirt Road
- Gravel Road
- X Paved Road
- Storm Sewer
- Sidewalk
- Water
- Sewer
- X Electric
- Gas
- Curb
- Street Lights
- Standard Utilities
- Underground Utils.

Topography of Site

- X Level
- Rolling
- X Low
- High
- Landscaped
- Swamp
- X Wooded
- Pond
- Waterfront
- Ravine
- Wetland
- Flood Plain
- X OPEN/PINES

Who	When	What
GLA	05/30/2017	INSPECTION

Land Value Estimates for Land Table 4010.LAND VALUES

Description	Frontage	Depth	* Factors * Front	Depth	Rate	%Adj.	Reason	Value
ACREAGE			59.780 Acres		2,643	100		157,988
ROW			1.590 Acres		0	100		0
			61.37 Total Acres				Total Est. Land Value =	157,988

Land Improvement Cost Estimates

Description	Rate	Size	% Good	Cash Value
D/W/P: 3.5 Concrete	5.82	46	45	121
Total Estimated Land Improvements True Cash Value =				121

Year	Land Value	Building Value	Assessed Value	Board of Review	Tribunal/ Other	Taxable Value
2024	79,000	64,700	143,700			60,970C
2023	76,100	53,200	129,300			58,067C
2022	50,800	45,200	96,000			55,302C
2021	48,900	46,000	94,900			53,536C

The Equalizer. Copyright (c) 1999 - 2009. Licensed To: Township of Greenwood, County of Wexford, Michigan

*** Information herein deemed reliable but not guaranteed***

Building Type

X	Single Family
	Mobile Home
	Town Home
	Duplex
	A-Frame
X	Wood Frame

Building Style: PLAIN

Yr Built	Remodeled
0	1975

Condition: Good

Room List

	Basement
	1st Floor
	2nd Floor
	Bedrooms

(1) Exterior

X	Wood/Shingle
	Aluminum/Vinyl
	Brick
X	Insulation

(2) Windows

	Many		Large
X	Avg.	X	Avg.
	Few		Small

X	Wood Sash
	Metal Sash
	Vinyl Sash
	Double Hung
	Horiz. Slide
	Casement
	Double Glass
	Patio Doors
X	Storms & Screens

(3) Roof

X	Gable		Gambrel
	Hip		Mansard
	Flat		Shed

X	Asphalt Shingle

Chimney:

(3) Roof (cont.)

	Eavestrough
X	Insulation
0	Front Overhang
0	Other Overhang

(4) Interior

X	Drywall		Plaster
	Paneled		Wood T&G

Trim & Decoration

	Ex	X	Ord		Min

Size of Closets

	Lg	X	Ord		Small

Doors:		Solid	X	H.C.	

(5) Floors

Kitchen:
Other: Linoleum
Other: Carpeted

(6) Ceilings

X	Drywall

(7) Excavation

Basement: 0 S.F.
Crawl: 1805 S.F.
Slab: 0 S.F.
Height to Joists: 0.0

(8) Basement

	Conc. Block
	Poured Conc.
	Stone
	Treated Wood
	Concrete Floor

(9) Basement Finish

	Recreation SF
	Living SF
	Walkout Doors (B)
	No Floor SF
	Walkout Doors (A)

(10) Floor Support

Joists:
Unsupported Len:
Cntr.Sup:

(11) Heating/Cooling

X	Gas		Oil		Elec.
	Wood		Coal		Steam

	Forced Air w/o Ducts
X	Forced Air w/ Ducts
	Forced Hot Water
	Electric Baseboard
	Elec. Ceil. Radiant
	Radiant (in-floor)
	Electric Wall Heat
	Space Heater
	Wall/Floor Furnace
	Forced Heat & Cool
	Heat Pump
	No Heating/Cooling

	Central Air
	Wood Furnace

(12) Electric

150	Amps Service

No./Qual. of Fixtures

	Ex.	X	Ord.		Min

No. of Elec. Outlets

	Many	X	Ave.		Few

(13) Plumbing

	Average Fixture(s)
1	3 Fixture Bath
	2 Fixture Bath
	Softener, Auto
	Softener, Manual
	Solar Water Heat
	No Plumbing
	Extra Toilet
	Extra Sink
	Separate Shower
	Ceramic Tile Floor
	Ceramic Tile Wains
	Ceramic Tub Alcove
	Vent Fan

(14) Water/Sewer

	Public Water
	Public Sewer
1	Water Well
1	1000 Gal Septic
	2000 Gal Septic

Lump Sum Items:

(15) Built-ins

	Appliance Allow.
	Cook Top
	Dishwasher
	Garbage Disposal
	Bath Heater
	Vent Fan
	Hot Tub
	Unvented Hood
	Vented Hood
	Intercom
	Jacuzzi Tub
	Jacuzzi repl.Tub
	Oven
	Microwave
	Standard Range
	Self Clean Range
	Sauna
	Trash Compactor
	Central Vacuum
	Security System

(15) Fireplaces

	Interior 1 Story
	Interior 2 Story
	2nd/Same Stack
	Two Sided
	Exterior 1 Story
	Exterior 2 Story
	Prefab 1 Story
	Prefab 2 Story
	Heat Circulator
	Raised Hearth
	Wood Stove
	Direct-Vented Gas

Class: D
Effec. Age: 48
Floor Area: 1,805
Total Base New : 191,730 E.C.F.
Total Depr Cost: 99,700 X 1.297
Estimated T.C.V: 129,311

(16) Porches/Decks

Area	Type
328	WPP

(17) Garage

Year Built:
Car Capacity:
Class:
Exterior:
Brick Ven.:
Stone Ven.:
Common Wall:
Foundation:
Finished ?:
Auto. Doors:
Mech. Doors:
Area:
% Good:
Storage Area:
No Conc. Floor:

Bsmnt Garage:

Carport Area:
Roof:

Cost Est. for Res. Bldg: 1 Single Family PLAIN Cls D Blt 0
(11) Heating System: Forced Air w/ Ducts
Ground Area = 1805 SF Floor Area = 1805 SF.
Phy/Ab.Phy/Func/Econ/Comb. % Good=52/100/100/100/52
Building Areas

Stories	Exterior	Foundation	Size	Cost New	Depr. Cost
1 Story	Siding	Crawl Space	1,805		
			Total:	177,696	92,402
Other Additions/Adjustments					
Water/Sewer					
1000 Gal Septic			1	4,293	2,232
Water Well, 50 Feet			1	2,515	1,308
Porches					
WPP			328	4,330	2,252
Local Cost Items					
FREE STANDING ROOF			400	2,896	1,506
			Totals:	191,730	99,700

Notes:

ECF (RESIDENTIAL) 1.297 => TCV: 129,311

*** Information herein deemed reliable but not guaranteed***

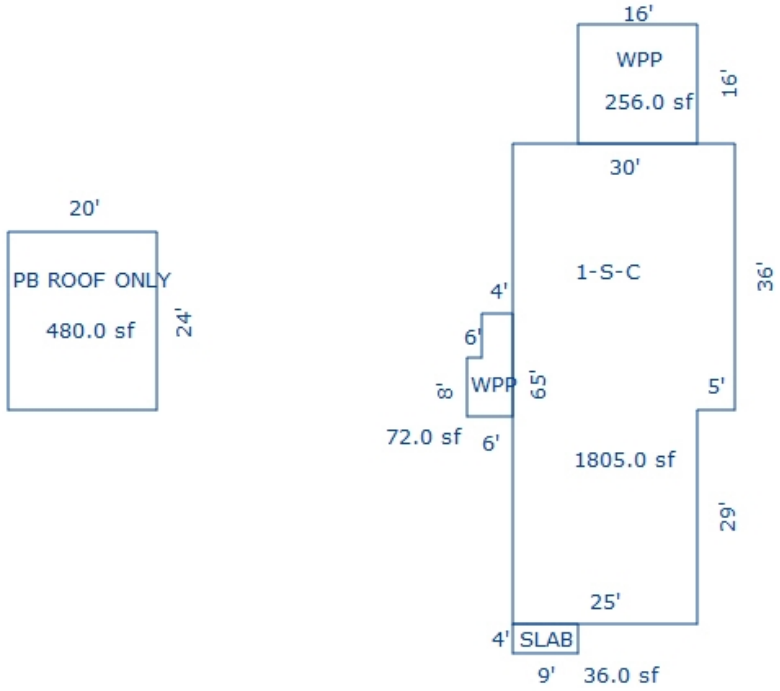

Sketch by Apex Sketch

*** Information herein deemed reliable but not guaranteed***

Parcel Number: 2410-22-1102 Jurisdiction: GREENWOOD TWP County: WEXFORD Printed on 02/15/2024

Grantor	Grantee	Sale Price	Sale Date	Inst. Type	Terms of Sale	Liber & Page	Verified By	Prcnt. Trans.
PADDOCK, FRANKLIN L	PADDOCK, FRANKLIN L TRUST	0	01/30/2014	QC	14-INTO/OUT OF TRUST	665/1552	DEED	0.0
PADDOCK, FRANK	PADDOCK, FRANKLIN L TRUST	0	01/18/2010	QC	09-FAMILY	627/764	DEED	0.0
PADDOCK, FRANK & PATRICK C	PADDOCK, FRANK	0	05/15/2006	WD	09-FAMILY	588/1617	DEED	0.0
PADDOCK, PATRICK J.	PADDOCK ET AL, FRANK	19,000	04/16/1990	LC	03-ARM'S LENGTH	323:180	DEED	0.0

Property Address

8971 N 33 RD

Owner's Name/Address

PADDOCK, FRANKLIN L TRUST
P O BOX 37
BUCKLEY MI 49620

Tax Description

N 225 FT OF THAT PART OF N 1/2 OF NE 1/4 LYING E OF C/L OF SILVER CREEK --1.1 A M/L-- GW. SEC. 22 T24N R10W -MANTON-

Comments/Influences

Class: RESIDENTIAL-IMPROV Zoning:

School: MANTON CONSOLIDATED SCHOOLS

P.R.E. 0%

:

2024 Est TCV 55,226 TCV/TFA: 76.70

Building Permit(s)	Date	Number	Status

X Improved | Vacant

	Public Improvements
	Dirt Road
	Gravel Road
X	Paved Road
	Storm Sewer
	Sidewalk
	Water
	Sewer
X	Electric
	Gas
	Curb
	Street Lights
	Standard Utilities
	Underground Utils.

	Topography of Site
X	Level
	Rolling
X	Low
	High
	Landscaped
	Swamp
X	Wooded
	Pond
	Waterfront
	Ravine
	Wetland
	Flood Plain
X	OPEN

Who	When	What
GLA	05/30/2017	INSPECTION
GLA	08/01/2014	INSPECTION

Land Value Estimates for Land Table 4010.LAND VALUES

Description	Frontage	Depth	* Factors * Front	Depth	Rate	%Adj.	Reason	Value
	133.00	0.00	1.0000	1.0000	0	100		0
ACREAGE			0.770 Acres		10,953	100		8,434
ROW			0.330 Acres		0	100		0

133 Actual Front Feet, 1.10 Total Acres Total Est. Land Value = 8,434

Land Improvement Cost Estimates

Description	Rate	Size	% Good	Cash Value
D/W/P: 4in Concrete	6.11	240	45	660
Wood Frame	23.57	96	45	1,018
Wood Frame	21.02	160	45	1,513
Total Estimated Land Improvements True Cash Value =				3,191

Year	Land Value	Building Value	Assessed Value	Board of Review	Tribunal/ Other	Taxable Value
2024	4,200	23,400	27,600			9,692C
2023	2,300	19,400	21,700			9,231C
2022	2,200	16,600	18,800			8,792C
2021	2,600	16,800	19,400			8,512C

The Equalizer. Copyright (c) 1999 - 2009. Licensed To: Township of Greenwood, County of Wexford, Michigan

*** Information herein deemed reliable but not guaranteed***

Building Type

X	Single Family
	Mobile Home
	Town Home
	Duplex
	A-Frame
X	Wood Frame

Building Style: PLAIN

Yr Built	Remodeled
0	1975

Condition: Good

Room List

	Basement
	1st Floor
	2nd Floor
	Bedrooms

(1) Exterior

X	Wood/Shingle
	Aluminum/Vinyl
	Brick
X	Insulation

(2) Windows

	Many		Large
X	Avg.	X	Avg.
	Few		Small

X	Wood Sash
	Metal Sash
	Vinyl Sash
	Double Hung
	Horiz. Slide
	Casement
	Double Glass
	Patio Doors
X	Storms & Screens

(3) Roof

X	Gable		Gambrel
	Hip		Mansard
	Flat		Shed

X	Asphalt Shingle

Chimney:

(3) Roof (cont.)

	Eavestrough
X	Insulation
0	Front Overhang
0	Other Overhang

(4) Interior

X	Drywall		Plaster
	Paneled		Wood T&G

Trim & Decoration

	Ex	X	Ord		Min

Size of Closets

	Lg	X	Ord		Small

Doors:		Solid	X	H.C.	

(5) Floors

Kitchen:
Other: Linoleum
Other: Carpeted

(6) Ceilings

X	Drywall

(7) Excavation

Basement: 0 S.F.
Crawl: 0 S.F.
Slab: 720 S.F.
Height to Joists: 0.0

(8) Basement

	Conc. Block
	Poured Conc.
	Stone
	Treated Wood
	Concrete Floor

(9) Basement Finish

	Recreation SF
	Living SF
	Walkout Doors (B)
	No Floor SF
	Walkout Doors (A)

(10) Floor Support

Joists:
Unsupported Len:
Cntr.Sup:

(11) Heating/Cooling

X	Gas		Oil		Elec.
	Wood		Coal		Steam

	Forced Air w/o Ducts
X	Forced Air w/ Ducts
	Forced Hot Water
	Electric Baseboard
	Elec. Ceil. Radiant
	Radiant (in-floor)
	Electric Wall Heat
	Space Heater
	Wall/Floor Furnace
	Forced Heat & Cool
	Heat Pump
	No Heating/Cooling
	Central Air
	Wood Furnace

(12) Electric

150	Amps Service

No./Qual. of Fixtures

	Ex.	X	Ord.		Min

No. of Elec. Outlets

	Many	X	Ave.		Few

(13) Plumbing

1	Average Fixture(s)
	3 Fixture Bath
	2 Fixture Bath
	Softener, Auto
	Softener, Manual
	Solar Water Heat
	No Plumbing
	Extra Toilet
	Extra Sink
	Separate Shower
	Ceramic Tile Floor
	Ceramic Tile Wains
	Ceramic Tub Alcove
	Vent Fan

(14) Water/Sewer

	Public Water
	Public Sewer
1	Water Well
1	1000 Gal Septic
	2000 Gal Septic

Lump Sum Items:

(15) Built-ins

	Appliance Allow.
	Cook Top
	Dishwasher
	Garbage Disposal
	Bath Heater
	Vent Fan
	Hot Tub
	Unvented Hood
	Vented Hood
	Intercom
	Jacuzzi Tub
	Jacuzzi repl.Tub
	Oven
	Microwave
	Standard Range
	Self Clean Range
	Sauna
	Trash Compactor
	Central Vacuum
	Security System

(15) Fireplaces

	Interior 1 Story
	Interior 2 Story
	2nd/Same Stack
	Two Sided
	Exterior 1 Story
	Exterior 2 Story
	Prefab 1 Story
	Prefab 2 Story
	Heat Circulator
	Raised Hearth
	Wood Stove
	Direct-Vented Gas

Class: D
Effec. Age: 48
Floor Area: 720
Total Base New : 107,980 E.C.F.
Total Depr Cost: 33,617 X 1.297
Estimated T.C.V: 43,601

(16) Porches/Decks

Area	Type
264	WGEP (1 Story)

(17) Garage

Year Built:
Car Capacity:
Class:
Exterior:
Brick Ven.:
Stone Ven.:
Common Wall:
Foundation:
Finished ?:
Auto. Doors:
Mech. Doors:
Area:
% Good:
Storage Area:
No Conc. Floor:

Bsmnt Garage:

Carport Area:
Roof:

Cost Est. for Res. Bldg: 1 Single Family PLAIN Cls D Blt 0
(11) Heating System: Forced Air w/ Ducts
Ground Area = 720 SF Floor Area = 720 SF.
Phy/Ab.Phy/Func/Econ/Comb. % Good=52/60/100/100/31.2
Building Areas

Stories	Exterior	Foundation	Size	Cost New	Depr. Cost	
1 Story	Siding	Slab	720			
			Total:	81,289	25,362	
Other Additions/Adjustments						
Water/Sewer						
1000 Gal Septic			1	4,293	1,339	
Water Well, 100 Feet			1	5,545	1,730	
Porches						
WGEP (1 Story)			264	15,349	4,789	
Local Cost Items						
SHED #2			100	780	206	*4
FREE STANDING ROOF			100	724	191	*4
			Totals:	107,980	33,617	

Notes:
ECF (RESIDENTIAL) 1.297 => TCV: 43,601

*** Information herein deemed reliable but not guaranteed***

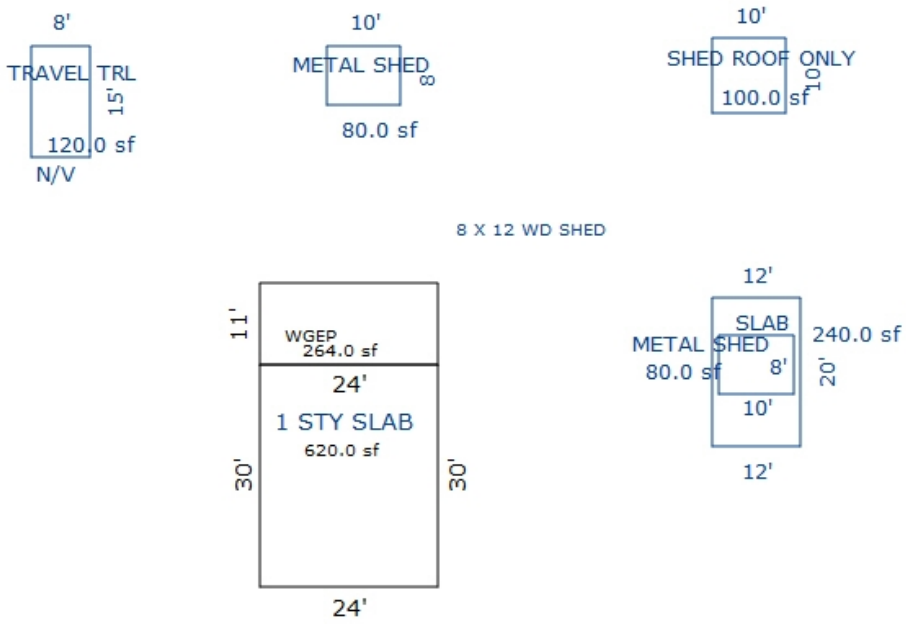

Sketch by Apex Sketch

*** Information herein deemed reliable but not guaranteed***

Parcel Number: 2410-22-1103 Jurisdiction: GREENWOOD TWP County: WEXFORD Printed on 02/15/2024

Grantor	Grantee	Sale Price	Sale Date	Inst. Type	Terms of Sale	Liber & Page	Verified By	Prcnt. Trans.
GRIGSBY, BERNETH R.	GRIGSBY, BERNETH R LE	0	04/04/2022	QC	18-LIFE ESTATE	692/1628	DEED	0.0

Property Address

8965 N 33 RD

Owner's Name/Address

GRIGSBY, BERNETH R LE
1718 COLUMBUS ST
HOLLAND MI 49423

Tax Description

S 100 FT OF N 325 FT OF THAT PART OF N 1/2 OF NE 1/4 LYING E OF C/L OF SILVER CREEK --.36 A M/L-- GW. SEC. 22 T24N R10W -MANTON-

Comments/Influences

Default Comments

Class: RESIDENTIAL-IMPROV Zoning:

School: MANTON CONSOLIDATED SCHOOLS

P.R.E. 0%

:

2024 Est TCV 44,904 TCV/TFA: 112.26

Building Permit(s)	Date	Number	Status

X Improved | Vacant

Public Improvements

	Dirt Road
X	Gravel Road
X	Paved Road
	Storm Sewer
	Sidewalk
	Water
	Sewer
X	Electric
	Gas
	Curb
	Street Lights
	Standard Utilities
	Underground Utils.

Topography of Site

X	Level
	Rolling
X	Low
	High
	Landscaped
	Swamp
X	Wooded
	Pond
	Waterfront
	Ravine
	Wetland
	Flood Plain
X	OPEN/PINES

Who When What

GLA 05/30/2017 INSPECTION
GLA 08/01/2014 INSPECTED

Land Value Estimates for Land Table 4010.LAND VALUES

Description	Frontage	Depth	* Factors * Front	Depth	Rate	%Adj.	Reason	Value
HELSEL RIV LOW	100.00	325.00	1.0000	0.0000	315	100*		0
ACREAGE			0.676 Acres		10,953	100		7,404
ROW			0.070 Acres		0	100		0

* denotes lines that do not contribute to the total acreage calculation.
100 Actual Front Feet, 0.75 Total Acres Total Est. Land Value = 7,404

Land Improvement Cost Estimates

Description	Rate	Size	% Good	Cash Value
Ad-Hoc Unit-In-Place Items				
Description	Rate	Size	% Good	Cash Value
OLD GARAGES	1.00	440	50	220

Total Estimated Land Improvements True Cash Value = 220

Year	Land Value	Building Value	Assessed Value	Board of Review	Tribunal/ Other	Taxable Value
2024	3,700	18,800	22,500			12,333C
2023	2,000	15,100	17,100			11,746C
2022	1,700	12,600	14,300			11,187C
2021	2,000	12,600	14,600			10,830C

The Equalizer. Copyright (c) 1999 - 2009.
Licensed To: Township of Greenwood, County of Wexford, Michigan

*** Information herein deemed reliable but not guaranteed***

Building Type

X	Single Family
	Mobile Home
	Town Home
	Duplex
	A-Frame

X	Wood Frame

Building Style: CABIN

Yr Built	Remodeled
0	0

Condition: Poor

Room List

	Basement
	1st Floor
	2nd Floor
	Bedrooms

(1) Exterior

X	Wood/Shingle
	Aluminum/Vinyl
	Brick
	Insulation

(2) Windows

	Many		Large
X	Avg.	X	Avg.
	Few		Small

X	Wood Sash
	Metal Sash
	Vinyl Sash
X	Double Hung
	Horiz. Slide
	Casement
	Double Glass
	Patio Doors
	Storms & Screens

(3) Roof

X	Gable		Gambrel
	Hip		Mansard
	Flat		Shed

X	Asphalt Shingle
	Metal

Chimney: Metal

(3) Roof (cont.)

	Eavestrough
	Insulation
0	Front Overhang
0	Other Overhang

(4) Interior

	Drywall		Plaster
	Paneled		Wood T&G

Trim & Decoration

	Ex		Ord		Min

Size of Closets

	Lg		Ord		Small

Doors:		Solid		H.C.

(5) Floors

Kitchen:
Other:
Other:

(6) Ceilings

(7) Excavation

Basement: 0 S.F.
Crawl: 0 S.F.
Slab: 400 S.F.
Height to Joists: 0.0

(8) Basement

	Conc. Block
	Poured Conc.
	Stone
	Treated Wood
	Concrete Floor

(9) Basement Finish

	Recreation SF
	Living SF
	Walkout Doors (B)
	No Floor SF
	Walkout Doors (A)

(10) Floor Support

Joists:
Unsupported Len:
Cntr.Sup:

(11) Heating/Cooling

X	Gas		Oil		Elec.
	Wood		Coal		Steam

	Forced Air w/o Ducts
X	Forced Air w/ Ducts
	Forced Hot Water
	Electric Baseboard
	Elec. Ceil. Radiant
	Radiant (in-floor)
	Electric Wall Heat
	Space Heater
	Wall/Floor Furnace
	Forced Heat & Cool
	Heat Pump
	No Heating/Cooling

	Central Air
	Wood Furnace

(12) Electric

0	Amps Service

No./Qual. of Fixtures

	Ex.		Ord.		Min

No. of Elec. Outlets

	Many		Ave.		Few

(13) Plumbing

1	Average Fixture(s)
	3 Fixture Bath
	2 Fixture Bath
	Softener, Auto
	Softener, Manual
	Solar Water Heat
	No Plumbing
	Extra Toilet
	Extra Sink
	Separate Shower
	Ceramic Tile Floor
	Ceramic Tile Wains
	Ceramic Tub Alcove
	Vent Fan

(14) Water/Sewer

	Public Water
	Public Sewer
1	Water Well
1	1000 Gal Septic
	2000 Gal Septic

Lump Sum Items:

(15) Built-ins

	Appliance Allow.
	Cook Top
	Dishwasher
	Garbage Disposal
	Bath Heater
	Vent Fan
	Hot Tub
	Unvented Hood
	Vented Hood
	Intercom
	Jacuzzi Tub
	Jacuzzi repl.Tub
	Oven
	Microwave
	Standard Range
	Self Clean Range
	Sauna
	Trash Compactor
	Central Vacuum
	Security System

(15) Fireplaces

	Interior 1 Story
	Interior 2 Story
	2nd/Same Stack
	Two Sided
	Exterior 1 Story
	Exterior 2 Story
	Prefab 1 Story
	Prefab 2 Story
	Heat Circulator
	Raised Hearth
	Wood Stove
	Direct-Vented Gas

Class: D
Effec. Age: 68
Floor Area: 400
Total Base New : 63,875 E.C.F.
Total Depr Cost: 28,743 X 1.297
Estimated T.C.V: 37,280

(16) Porches/Decks

Area	Type
80	WSEP (1 Story)

(17) Garage

Year Built:
Car Capacity:
Class:
Exterior:
Brick Ven.:
Stone Ven.:
Common Wall:
Foundation:
Finished ?:
Auto. Doors:
Mech. Doors:
Area:
% Good:
Storage Area:
No Conc. Floor:

Bsmnt Garage:

Carport Area:
Roof:

Cost Est. for Res. Bldg: 1 Single Family CABIN Cls D Blt 0
(11) Heating System: Forced Air w/ Ducts
Ground Area = 400 SF Floor Area = 400 SF.
Phy/Ab.Phy/Func/Econ/Comb. % Good=45/100/100/100/45
Building Areas

Stories	Exterior	Foundation	Size	Cost New	Depr. Cost
1 Story	Siding	Slab	400		
			Total:	49,909	22,458
Other Additions/Adjustments					
Water/Sewer					
1000 Gal Septic			1	4,293	1,932
Water Well, 100 Feet			1	5,545	2,495
Porches					
WSEP (1 Story)			80	4,128	1,858
			Totals:	63,875	28,743

Notes:

ECF (RESIDENTIAL) 1.297 => TCV: 37,280

*** Information herein deemed reliable but not guaranteed***

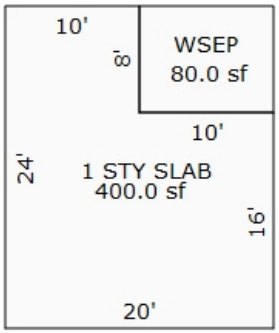

Sketch by Apex Sketch

*** Information herein deemed reliable but not guaranteed***

Parcel Number: 2410-22-1104 Jurisdiction: GREENWOOD TWP County: WEXFORD Printed on 02/15/2024

Grantor	Grantee	Sale Price	Sale Date	Inst. Type	Terms of Sale	Liber & Page	Verified By	Prcnt. Trans.

Property Address	Class: RESIDENTIAL-IMPROV	Zoning:	Building Permit(s)	Date	Number	Status
8925 N 33 RD	School: MANTON CONSOLIDATED SCHOOLS		Electrical	05/17/2011	PE11-19046	
	P.R.E. 0%					
Owner's Name/Address	:					
WESTBROOK, WILLIAM W TRUST P O BOX 263 MONTAGUE MI 49437-0263	2024 Est TCV 119,052 TCV/TFA: 248.03					

Tax Description

PAR COM AT NE COR OF SEC; TH S 325 FT TO POB: S 300 FT; W 1163.80 FT; N 625 FT TO N SEC LINE; E 800 FT; S 133 FT; E 153.50 FT TO TRAVERSE LINE ALONG LEFT BANK SILVER CREEK; S 4D 4' 35" W ALONG TRAVERSE LINE 79.06 FT; S 33D 46' 09" E 50.81 FT; S 62D 03' 44" E 48.92 FT; S 31D 02' 40"E 55.42 FT; E 138.81 FT TO POB. AKA PAR "B" 14.81 A M/L/ GW SEC 22 T24N R10W -MANTON- [[PARTLY ASSESSED W/22-1101 '98

Comments/Influences

X	Improved	
	Vacant	

Public Improvements

	Dirt Road
X	Gravel Road
X	Paved Road
	Storm Sewer
	Sidewalk
	Water
	Sewer
X	Electric
	Gas
	Curb
	Street Lights
	Standard Utilities
	Underground Utils.

Topography of Site

X	Level
	Rolling
X	Low
	High
	Landscaped
	Swamp
X	Wooded
	Pond
	Waterfront
	Ravine
	Wetland
	Flood Plain
X	OPEN/PINES

Who	When	What
GLA	05/30/2017	INSPECTION
GLA	08/01/2014	INSPECTION

Land Value Estimates for Land Table 4010.LAND VALUES

Description	Frontage	Depth	* Factors * Front	Depth	Rate	%Adj.	Reason	Value
ACREAGE			14.030 Acres		3,398	100		47,680
ROW			0.780 Acres		0	100		0
			14.81 Total Acres		Total Est. Land Value =			47,680

Land Improvement Cost Estimates

Description	Rate	Size	% Good	Cash Value
D/W/P: 4in Concrete	6.53	125	45	367
Wood Frame	24.32	140	45	1,532
Total Estimated Land Improvements True Cash Value =				1,899

Year	Land Value	Building Value	Assessed Value	Board of Review	Tribunal/ Other	Taxable Value
2024	23,800	35,700	59,500			25,311C
2023	18,200	29,400	47,600			24,106C
2022	16,200	25,000	41,200			22,959C
2021	16,800	25,400	42,200			22,226C

The Equalizer. Copyright (c) 1999 - 2009. Licensed To: Township of Greenwood, County of Wexford, Michigan

*** Information herein deemed reliable but not guaranteed***

Building Type

X	Single Family
	Mobile Home
	Town Home
	Duplex
	A-Frame
X	Wood Frame

Building Style: PLAIN

Yr Built	Remodeled
0	1975

Condition: Fair

Room List

	Basement
	1st Floor
	2nd Floor
	Bedrooms

(1) Exterior

X	Wood/Shingle
	Aluminum/Vinyl
	Brick
X	Insulation

(2) Windows

	Many		Large
X	Avg.	X	Avg.
	Few		Small

X	Wood Sash
	Metal Sash
	Vinyl Sash
	Double Hung
	Horiz. Slide
	Casement
	Double Glass
	Patio Doors
X	Storms & Screens

(3) Roof

X	Gable		Gambrel
	Hip		Mansard
	Flat		Shed

X	Asphalt Shingle

Chimney:

(3) Roof (cont.)

	Eavestrough
X	Insulation
0	Front Overhang
0	Other Overhang

(4) Interior

X	Drywall		Plaster
	Paneled		Wood T&G

Trim & Decoration

	Ex	X	Ord		Min

Size of Closets

	Lg	X	Ord		Small

Doors:		Solid	X	H.C.	

(5) Floors

Kitchen:
Other: Linoleum
Other: Carpeted

(6) Ceilings

X	Drywall

(7) Excavation

Basement: 0 S.F.
Crawl: 0 S.F.
Slab: 480 S.F.
Height to Joists: 0.0

(8) Basement

	Conc. Block
	Poured Conc.
	Stone
	Treated Wood
	Concrete Floor

(9) Basement Finish

	Recreation SF
	Living SF
	Walkout Doors (B)
	No Floor SF
	Walkout Doors (A)

(10) Floor Support

Joists:
Unsupported Len:
Cntr.Sup:

(11) Heating/Cooling

X	Gas		Oil		Elec.
	Wood		Coal		Steam

	Forced Air w/o Ducts
X	Forced Air w/ Ducts
	Forced Hot Water
	Electric Baseboard
	Elec. Ceil. Radiant
	Radiant (in-floor)
	Electric Wall Heat
	Space Heater
	Wall/Floor Furnace
	Forced Heat & Cool
	Heat Pump
	No Heating/Cooling
	Central Air
	Wood Furnace

(12) Electric

150	Amps Service

No./Qual. of Fixtures

	Ex.	X	Ord.		Min

No. of Elec. Outlets

	Many	X	Ave.		Few

(13) Plumbing

	Average Fixture(s)
1	3 Fixture Bath
	2 Fixture Bath
	Softener, Auto
	Softener, Manual
	Solar Water Heat
	No Plumbing
	Extra Toilet
	Extra Sink
	Separate Shower
	Ceramic Tile Floor
	Ceramic Tile Wains
	Ceramic Tub Alcove
	Vent Fan

(14) Water/Sewer

	Public Water
	Public Sewer
1	Water Well
1	1000 Gal Septic
	2000 Gal Septic

Lump Sum Items:

(15) Built-ins

	Appliance Allow.
	Cook Top
	Dishwasher
	Garbage Disposal
	Bath Heater
	Vent Fan
	Hot Tub
	Unvented Hood
	Vented Hood
	Intercom
	Jacuzzi Tub
	Jacuzzi repl.Tub
	Oven
	Microwave
	Standard Range
	Self Clean Range
	Sauna
	Trash Compactor
	Central Vacuum
	Security System

(15) Fireplaces

	Interior 1 Story
	Interior 2 Story
	2nd/Same Stack
	Two Sided
	Exterior 1 Story
	Exterior 2 Story
	Prefab 1 Story
	Prefab 2 Story
	Heat Circulator
	Raised Hearth
	Wood Stove
	Direct-Vented Gas

Class: CD
Effec. Age: 48
Floor Area: 480
Total Base New : 103,007 E.C.F.
Total Depr Cost: 53,564 X 1.297
Estimated T.C.V: 69,473

(16) Porches/Decks

Area	Type
216	WGEP (1 Story)
150	Treated Wood
56	Treated Wood

(17) Garage

Year Built:
Car Capacity:
Class: D
Exterior: Siding
Brick Ven.: 0
Stone Ven.: 0
Common Wall: Detache
Foundation: 42 Inch
Finished ?:
Auto. Doors: 0
Mech. Doors: 0
Area: 280
% Good: 0
Storage Area: 0
No Conc. Floor: 0

Bsmnt Garage:

Carport Area:
Roof:

Cost Est. for Res. Bldg: 1 Single Family PLAIN Cls CD Blt 0
(11) Heating System: Forced Air w/ Ducts
Ground Area = 480 SF Floor Area = 480 SF.
Phy/Ab.Phy/Func/Econ/Comb. % Good=52/100/100/100/52
Building Areas

Stories	Exterior	Foundation	Size	Cost New	Depr. Cost
1 Story	Siding	Slab	480		
			Total:	60,436	31,426
Other Additions/Adjustments					
Water/Sewer					
1000 Gal Septic			1	4,582	2,383
Water Well, 100 Feet			1	5,680	2,954
Porches					
WGEP (1 Story)			216	14,660	7,623
Deck					
Treated Wood			150	3,372	1,753
Treated Wood			56	1,851	963
Garages					
Class: D Exterior: Siding Foundation: 42 Inch (Unfinished)					
Base Cost			280	12,426	6,462
			Totals:	103,007	53,564

Notes:
ECF (RESIDENTIAL) 1.297 => TCV: 69,473

*** Information herein deemed reliable but not guaranteed***

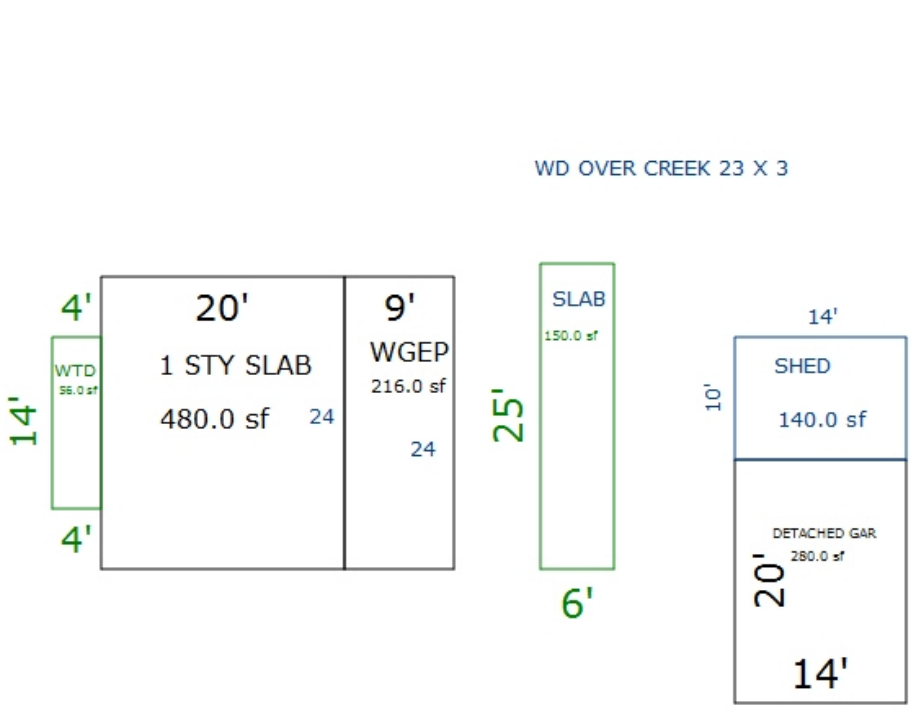

Sketch by Apex Sketch

*** Information herein deemed reliable but not guaranteed***

Parcel Number: 2410-22-1105 Jurisdiction: GREENWOOD TWP County: WEXFORD Printed on 02/15/2024

Grantor	Grantee	Sale Price	Sale Date	Inst. Type	Terms of Sale	Liber & Page	Verified By	Prcnt. Trans.
KOPS, DIANE ETAL	YOUNG, ROBERT & LESLIE	3,000	07/01/2002	WD	03-ARM'S LENGTH	389:507	DEED	0.0

Property Address

Owner's Name/Address

YOUNG, ROBERT H
& LESLIE R
2781 FOUR POINT LN
TWIN LAKE MI 49457

Tax Description

N 133 FT OF E 400 FT OF THAT PART OF N 1/2 OF NE 1/4 LYING W OF C/L OF SILVER CREEK --.6 A M/L-- GW. SEC. 22 T24N R10W -MANTON-

Comments/Influences

Class: RESIDENTIAL-VACANT Zoning:

School: MANTON CONSOLIDATED SCHOOLS

P.R.E. 0%

:

2024 Est TCV 5,038

Building Permit(s)	Date	Number	Status

[ ] Improved [X] Vacant

Land Value Estimates for Land Table 4010.LAND VALUES

Description	Frontage	Depth	* Factors * Front	Depth	Rate	%Adj.	Reason	Value
	200.00	0.00	1.0000	1.0000	0	100		0
ACREAGE			0.460 Acres		10,953	100		5,038
ROW			0.140 Acres		0	100		0
200 Actual Front Feet, 0.60 Total Acres							Total Est. Land Value =	5,038

Public Improvements

	Dirt Road
	Gravel Road
X	Paved Road
	Storm Sewer
	Sidewalk
	Water
	Sewer
X	Electric
	Gas
	Curb
	Street Lights
	Standard Utilities
	Underground Utils.

Topography of Site

X	Level
	Rolling
	Low
	High
	Landscaped
X	Swamp
	Wooded
	Pond
	Waterfront
	Ravine
	Wetland
	Flood Plain
X	OPEN

Who	When	What
GLA	05/30/2017	INSPECTION

Year	Land Value	Building Value	Assessed Value	Board of Review	Tribunal/ Other	Taxable Value
2024	2,500	0	2,500			1,470C
2023	1,400	0	1,400			1,400S
2022	1,600	0	1,600			1,600S
2021	1,800	0	1,800			1,622C

The Equalizer. Copyright (c) 1999 - 2009.
Licensed To: Township of Greenwood, County of Wexford, Michigan

*** Information herein deemed reliable but not guaranteed***

Parcel Number: 2410-22-1301 Jurisdiction: GREENWOOD TWP County: WEXFORD Printed on 02/15/2024

Grantor	Grantee	Sale Price	Sale Date	Inst. Type	Terms of Sale	Liber & Page	Verified By	Prcnt. Trans.

Property Address

Class: AGRICULTURAL-VACAN Zoning:

School: MANTON CONSOLIDATED SCHOOLS

P.R.E. 0%

:

2024 Est TCV 0

Building Permit(s)	Date	Number	Status

Owner's Name/Address

STATE OF MICHIGAN
P O BOX 30735
GRANTS ADMINISTRATION
LANSING MI 48909-8235

	Improved	X	Vacant

Land Value Estimates for Land Table 4010.LAND VALUES

Description	Frontage	Depth	* Factors * Front	Depth	Rate	%Adj.	Reason	Value
ACREAGE			473.300 Acres		2,480	100		1,173,784
			5.700 Acres		0	100		0
			479.00 Total Acres		Total Est. Land Value =			1,173,784

Tax Description

ENTIRE SEC. 22 EXC N 1/2 OF NE 1/4 & EXC W 1/2 OF SE 1/4 & EXC 1 SQ A IN NW COR. --479 A.-- GW. SEC. 22 T24N R10W -MANTON-

Comments/Influences

	Public Improvements
	Dirt Road
X	Gravel Road
X	Paved Road
	Storm Sewer
	Sidewalk
	Water
	Sewer
X	Electric
	Gas
	Curb
	Street Lights
	Standard Utilities
	Underground Utils.

	Topography of Site
X	Level
	Rolling
X	Low
	High
	Landscaped
	Swamp
X	Wooded
	Pond
	Waterfront
	Ravine
	Wetland
	Flood Plain
X	OPEN/PINES

Who	When	What
GLA	05/30/2017	INSPECTION

Year	Land Value	Building Value	Assessed Value	Board of Review	Tribunal/ Other	Taxable Value
2024	EXEMPT	EXEMPT	EXEMPT			EXEMPT
2023	EXEMPT	EXEMPT	EXEMPT			EXEMPT
2022	0	0	0			0
2021	0	0	0			0

The Equalizer. Copyright (c) 1999 - 2009. Licensed To: Township of Greenwood, County of Wexford, Michigan

*** Information herein deemed reliable but not guaranteed***

Parcel Number: 2410-22-2202 Jurisdiction: GREENWOOD TWP County: WEXFORD Printed on 02/15/2024

Grantor	Grantee	Sale Price	Sale Date	Inst. Type	Terms of Sale	Liber & Page	Verified By	Prcnt. Trans.
EAST TRAVERSE CATHOLIC FED	WARBLOW, ANDREW	29,000	07/21/2015	WD	21-NOT USED/OTHER	675/2067	DEED	100.0
JOHNSTON, RICHARD A.	EAST TRAVERSE CATHOLIC CRE	74,974	04/27/2007	SD	21-NOT USED/OTHER	600/185	DEED	0.0
STROHM, VIOLET & KEVIN LYT	JOHNSTON, RICHARD A	24,000	03/08/2001	WD	03-ARM'S LENGTH	380:123	DEED	0.0
STROHM, VIOLET B.	JOHNSTON, RICHARD A.	24,000	09/11/1997	LC	03-ARM'S LENGTH	356:881	DEED	0.0

Property Address

3046 E 8 RD

Owner's Name/Address

WARBLOW, ANDREW
11710 SUTFIN RD
CLARKLAKE MI 49234

Tax Description

1 SQ ACRE IN NW COR OF NW 1/4 OF NW 1/4 1 A. GW. SEC. 22 T24N R10W -MANTON-

Comments/Influences

Class: RESIDENTIAL-IMPROV Zoning:

School: MANTON CONSOLIDATED SCHOOLS

P.R.E. 0%

:

2024 Est TCV 83,283 TCV/TFA: 96.39

Building Permit(s)	Date	Number	Status
RESIDENTIAL - REMODEL	09/27/2001	PM5317	

X Improved | Vacant

Public Improvements

	Dirt Road
X	Gravel Road
X	Paved Road
	Storm Sewer
	Sidewalk
	Water
	Sewer
X	Electric
	Gas
	Curb
	Street Lights
	Standard Utilities
	Underground Utils.

Topography of Site

X	Level
	Rolling
X	Low
	High
	Landscaped
	Swamp
X	Wooded
	Pond
	Waterfront
	Ravine
	Wetland
	Flood Plain
X	OPEN/PINES

Who	When	What
GLA	05/30/2017	INSPECTION
GLA	08/01/2014	INSPECTION

Land Value Estimates for Land Table 4010.LAND VALUES

Description	Frontage	Depth	* Factors * Front	Depth	Rate	%Adj.	Reason	Value
ACREAGE			0.850 Acres		10,953	100		9,310
ROW			0.150 Acres		0	100		0
			1.00 Total Acres		Total Est. Land Value =			9,310

Land Improvement Cost Estimates

Description	Rate	Size	% Good	Cash Value
Wood Frame	18.43	352	44	2,854
Total Estimated Land Improvements True Cash Value =				2,854

Year	Land Value	Building Value	Assessed Value	Board of Review	Tribunal/ Other	Taxable Value
2024	4,700	36,900	41,600			22,463C
2023	2,600	30,500	33,100			21,394C
2022	2,100	26,000	28,100			20,376C
2021	2,600	26,300	28,900			19,726C

The Equalizer. Copyright (c) 1999 - 2009. Licensed To: Township of Greenwood, County of Wexford, Michigan

*** Information herein deemed reliable but not guaranteed***

Building Type

X	Single Family
	Mobile Home
	Town Home
	Duplex
	A-Frame
X	Wood Frame

Building Style: PLAIN

Yr Built	Remodeled
0	0

Condition: Fair

Room List

	Basement
	1st Floor
	2nd Floor
	Bedrooms

(1) Exterior

	Wood/Shingle
X	Aluminum/Vinyl
	Brick
X	Insulation

(2) Windows

	Many		Large
X	Avg.	X	Avg.
	Few		Small

	Wood Sash
	Metal Sash
X	Vinyl Sash
	Double Hung
	Horiz. Slide
	Casement
	Double Glass
	Patio Doors
X	Storms & Screens

(3) Roof

X	Gable		Gambrel
	Hip		Mansard
	Flat		Shed

X	Asphalt Shingle

Chimney:

(3) Roof (cont.)

	Eavestrough
X	Insulation
0	Front Overhang
0	Other Overhang

(4) Interior

X	Drywall		Plaster
	Paneled		Wood T&G

Trim & Decoration

	Ex	X	Ord		Min

Size of Closets

	Lg	X	Ord		Small

Doors:		Solid	X	H.C.	

(5) Floors

Kitchen:
Other: Linoleum
Other: Carpeted

(6) Ceilings

X	Drywall		

(7) Excavation

Basement: 0 S.F.
Crawl: 0 S.F.
Slab: 864 S.F.
Height to Joists: 0.0

(8) Basement

	Conc. Block
	Poured Conc.
	Stone
	Treated Wood
	Concrete Floor

(9) Basement Finish

	Recreation SF
	Living SF
	Walkout Doors (B)
	No Floor SF
	Walkout Doors (A)

(10) Floor Support

Joists:
Unsupported Len:
Cntr.Sup:

(11) Heating/Cooling

X	Gas		Oil		Elec.
	Wood		Coal		Steam

	Forced Air w/o Ducts
	Forced Air w/ Ducts
	Forced Hot Water
	Electric Baseboard
	Elec. Ceil. Radiant
	Radiant (in-floor)
	Electric Wall Heat
	Space Heater
	Wall/Floor Furnace
	Forced Heat & Cool
	Heat Pump
X	No Heating/Cooling
	Central Air
	Wood Furnace

(12) Electric

150	Amps Service

No./Qual. of Fixtures

	Ex.	X	Ord.		Min

No. of Elec. Outlets

	Many	X	Ave.		Few

(13) Plumbing

	Average Fixture(s)
1	3 Fixture Bath
	2 Fixture Bath
	Softener, Auto
	Softener, Manual
	Solar Water Heat
	No Plumbing
	Extra Toilet
	Extra Sink
	Separate Shower
	Ceramic Tile Floor
	Ceramic Tile Wains
	Ceramic Tub Alcove
	Vent Fan

(14) Water/Sewer

	Public Water
	Public Sewer
1	Water Well
1	1000 Gal Septic
	2000 Gal Septic

Lump Sum Items:

(15) Built-ins

	Appliance Allow.
	Cook Top
	Dishwasher
	Garbage Disposal
	Bath Heater
	Vent Fan
	Hot Tub
	Unvented Hood
	Vented Hood
	Intercom
	Jacuzzi Tub
	Jacuzzi repl.Tub
	Oven
	Microwave
	Standard Range
	Self Clean Range
	Sauna
	Trash Compactor
	Central Vacuum
	Security System

(15) Fireplaces

	Interior 1 Story
	Interior 2 Story
	2nd/Same Stack
	Two Sided
	Exterior 1 Story
	Exterior 2 Story
	Prefab 1 Story
	Prefab 2 Story
	Heat Circulator
	Raised Hearth
	Wood Stove
	Direct-Vented Gas

Class: D
Effec. Age: 48
Floor Area: 864
Total Base New : 105,452 E.C.F.
Total Depr Cost: 54,834 X 1.297
Estimated T.C.V: 71,119

(16) Porches/Decks

Area	Type
60	CPP
240	WPP

(17) Garage

Year Built:
Car Capacity:
Class:
Exterior:
Brick Ven.:
Stone Ven.:
Common Wall:
Foundation:
Finished ?:
Auto. Doors:
Mech. Doors:
Area:
% Good:
Storage Area:
No Conc. Floor:

Bsmnt Garage:

Carport Area:
Roof:

Cost Est. for Res. Bldg: 1 Single Family PLAIN Cls D Blt 0
(11) Heating System: No Heating/Cooling
Ground Area = 864 SF Floor Area = 864 SF.
Phy/Ab.Phy/Func/Econ/Comb. % Good=52/100/100/100/52
Building Areas

Stories	Exterior	Foundation	Size	Cost New	Depr. Cost
1 Story	Siding	Slab	864		
			Total:	90,527	47,074
Other Additions/Adjustments					
Water/Sewer					
1000 Gal Septic			1	4,293	2,232
Water Well, 100 Feet			1	5,545	2,883
Porches					
CPP			60	1,199	623
WPP			240	3,888	2,022
			Totals:	105,452	54,834

Notes:
ECF (RESIDENTIAL) 1.297 => TCV: 71,119

*** Information herein deemed reliable but not guaranteed***

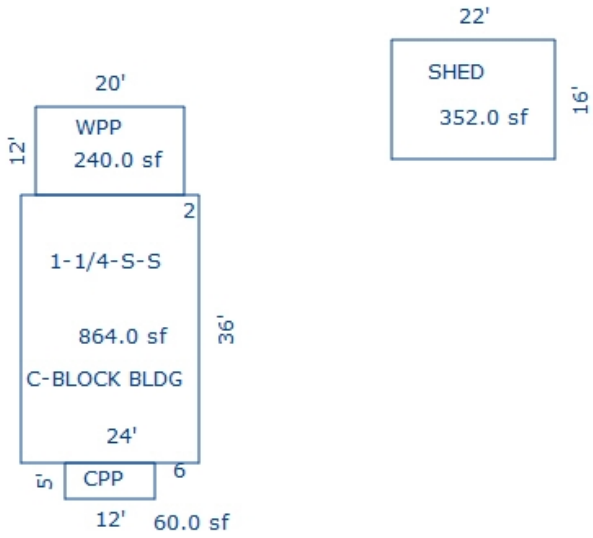

Sketch by Apex Sketch

*** Information herein deemed reliable but not guaranteed***

Parcel Number: 2410-22-4201 Jurisdiction: GREENWOOD TWP County: WEXFORD Printed on 02/15/2024

Grantor	Grantee	Sale Price	Sale Date	Inst. Type	Terms of Sale	Liber & Page	Verified By	Prcnt. Trans.
LYTLE, KEVIN C	VAN TIL, RICHARD J & JANE	0	04/12/2007	QC	21-NOT USED/OTHER	599:2129	DEED	0.0
VAN TIL, RICHARD J & JANE	ADAM, RUDOLPH M II	60,000	04/12/2007	WD	03-ARM'S LENGTH	599:2130	DEED	100.0
BIGELOW, CHARLES C.	VAN TIL, RICHARD & JANE	24,000	11/15/1998	WD	03-ARM'S LENGTH	364:733	DEED	0.0
STROHM, VIOLET B.	BIGELOW, CHARLES C.	22,000	08/25/1997	WD	03-ARM'S LENGTH	356:950	DEED	0.0

Property Address

Owner's Name/Address

ADAM, RUDOLPH M II
19572 WOOD
MELVINDALE MI 48122

Tax Description

PAR "C" COM AT S 1/4 COR OF SEC; TH E 329.23 FT TO POB: TH E 627.35 FT; N 2649.71 FT TO E & W 1/4 LINE; TH W 630.64 FT; TH S 2649.94 FT TO POB 38.25 A M/L GW. SEC. 22 T24N R10W -MANTON-

Comments/Influences

Class: RESIDENTIAL-IMPROV Zoning:

School: MANTON CONSOLIDATED SCHOOLS

P.R.E. 0%

:

2024 Est TCV 137,228 TCV/TFA: 328.30

Building Permit(s)	Date	Number	Status

X	Improved		Vacant

	Public Improvements
X	Dirt Road
X	Gravel Road
	Paved Road
	Storm Sewer
	Sidewalk
	Water
	Sewer
X	Electric
	Gas
	Curb
	Street Lights
	Standard Utilities
	Underground Utils.

	Topography of Site
X	Level
X	Rolling
X	Low
	High
	Landscaped
	Swamp
X	Wooded
	Pond
	Waterfront
	Ravine
	Wetland
	Flood Plain
X	OPEN/PINES

Who	When	What
GLA	05/30/2017	INSPECTION
GLA	08/01/2014	INSPECTION

Land Value Estimates for Land Table 4010.LAND VALUES

Description	Frontage	Depth	* Factors * Front	Depth	Rate	%Adj.	Reason	Value
ACREAGE			37.750 Acres		2,722	100		102,756
ROW			0.500 Acres		0	100		0
			38.25 Total Acres		Total Est. Land Value =			102,756

Year	Land Value	Building Value	Assessed Value	Board of Review	Tribunal/ Other	Taxable Value
2024	51,400	17,200	68,600			34,908C
2023	45,600	14,200	59,800			33,246C
2022	36,500	12,000	48,500			31,663C
2021	32,400	12,200	44,600			30,652C

The Equalizer. Copyright (c) 1999 - 2009. Licensed To: Township of Greenwood, County of Wexford, Michigan

*** Information herein deemed reliable but not guaranteed***

Building Type

X	Single Family
	Mobile Home
	Town Home
	Duplex
	A-Frame
X	Wood Frame

Building Style: CABIN

Yr Built	Remodeled
2008	0

Condition: Fair

Room List

	Basement
	1st Floor
	2nd Floor
	Bedrooms

(1) Exterior

X	Wood/Shingle
	Aluminum/Vinyl
	Brick
	Insulation

(2) Windows

X	Many		Large
	Avg.	X	Avg.
	Few		Small

Wood Sash
Metal Sash
Vinyl Sash
Double Hung
Horiz. Slide
Casement
Double Glass
Patio Doors
Storms & Screens

(3) Roof

X	Gable		Gambrel
	Hip		Mansard
	Flat		Shed
X	Asphalt Shingle		

Chimney: Brick

(3) Roof (cont.)

	Eavestrough
	Insulation
0	Front Overhang
0	Other Overhang

(4) Interior

	Drywall		Plaster
	Paneled		Wood T&G

Trim & Decoration

	Ex	X	Ord		Min

Size of Closets

	Lg	X	Ord		Small

Doors:		Solid	X	H.C.	

(5) Floors

Kitchen:
Other:
Other:

(6) Ceilings

(7) Excavation

Basement: 0 S.F.
Crawl: 0 S.F.
Slab: 0 S.F.
Height to Joists: 0.0

(8) Basement

Conc. Block
Poured Conc.
Stone
Treated Wood
Concrete Floor

(9) Basement Finish

	Recreation SF
	Living SF
	Walkout Doors (B)
	No Floor SF
	Walkout Doors (A)

(10) Floor Support

Joists:
Unsupported Len:
Cntr.Sup:

(11) Heating/Cooling

X	Gas		Oil		Elec.
	Wood		Coal		Steam

	Forced Air w/o Ducts
X	Forced Air w/ Ducts
	Forced Hot Water
	Electric Baseboard
	Elec. Ceil. Radiant
	Radiant (in-floor)
	Electric Wall Heat
	Space Heater
	Wall/Floor Furnace
	Forced Heat & Cool
	Heat Pump
	No Heating/Cooling

	Central Air
	Wood Furnace

(12) Electric

0	Amps Service

No./Qual. of Fixtures

	Ex.	X	Ord.		Min

No. of Elec. Outlets

	Many	X	Ave.		Few

(13) Plumbing

1	Average Fixture(s)
	3 Fixture Bath
	2 Fixture Bath
	Softener, Auto
	Softener, Manual
	Solar Water Heat
	No Plumbing
	Extra Toilet
	Extra Sink
	Separate Shower
	Ceramic Tile Floor
	Ceramic Tile Wains
	Ceramic Tub Alcove
	Vent Fan

(14) Water/Sewer

	Public Water
	Public Sewer
	Water Well
	1000 Gal Septic
	2000 Gal Septic

Lump Sum Items:

(15) Built-ins

	Appliance Allow.
	Cook Top
	Dishwasher
	Garbage Disposal
	Bath Heater
	Vent Fan
	Hot Tub
	Unvented Hood
	Vented Hood
	Intercom
	Jacuzzi Tub
	Jacuzzi repl.Tub
	Oven
	Microwave
	Standard Range
	Self Clean Range
	Sauna
	Trash Compactor
	Central Vacuum
	Security System

(15) Fireplaces

	Interior 1 Story
	Interior 2 Story
	2nd/Same Stack
	Two Sided
	Exterior 1 Story
	Exterior 2 Story
	Prefab 1 Story
	Prefab 2 Story
	Heat Circulator
	Raised Hearth
	Wood Stove
	Direct-Vented Gas

Class: D
Effec. Age: 46
Floor Area: 418
Total Base New : 49,219 E.C.F.
Total Depr Cost: 26,578 X 1.297
Estimated T.C.V: 34,472

(16) Porches/Decks

Area	Type

(17) Garage

Year Built:
Car Capacity:
Class:
Exterior:
Brick Ven.:
Stone Ven.:
Common Wall:
Foundation:
Finished ?:
Auto. Doors:
Mech. Doors:
Area:
% Good:
Storage Area:
No Conc. Floor:

Bsmnt Garage:

Carport Area:
Roof:

Cost Est. for Res. Bldg: 1 Single Family CABIN Cls D Blt 2008
(11) Heating System: Forced Air w/ Ducts
Ground Area = 418 SF Floor Area = 418 SF.
Phy/Ab.Phy/Func/Econ/Comb. % Good=54/100/100/100/54
Building Areas

Stories	Exterior	Foundation	Size	Cost New	Depr. Cost
1 Story	Siding	Piers	418		
			Total:	49,219	26,578

Other Additions/Adjustments

Totals:	49,219	26,578

Notes:

ECF (RESIDENTIAL) 1.297 => TCV: 34,472

*** Information herein deemed reliable but not guaranteed***

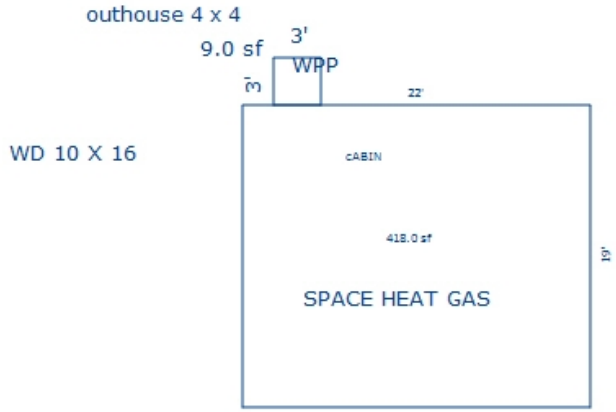

Sketch by Apex Sketch

*** Information herein deemed reliable but not guaranteed***

Parcel Number: 2410-22-4202 Jurisdiction: GREENWOOD TWP County: WEXFORD Printed on 02/15/2024

Grantor	Grantee	Sale Price	Sale Date	Inst. Type	Terms of Sale	Liber & Page	Verified By	Prcnt. Trans.
HENRY, RAY A.	MARTIN, BRYAN J & RENEE M	30,000	03/03/2022	WD	20-MULTI PARCEL SALE REF	692/1099	DEED	100.0
BIGELOW, CHARLES C.	HENRY ET AL, RAY & GLORIA	15,000	09/18/1997	WD	03-ARM'S LENGTH	356:991	DEED	0.0

Property Address

Owner's Name/Address

MARTIN, BRYAN J & RENEE M
497 E LAKE MITCHELL DR
CADILLAC MI 49601

Tax Description

W 164.62 FT OF W 1/2 OF SE 1/4 10 A. M/L GW. SEC. 22 T24N R10W-MANTON-

Comments/Influences

Class: RESIDENTIAL-VACANT Zoning:

School: MANTON CONSOLIDATED SCHOOLS

P.R.E. 0%

:

2024 Est TCV 45,857

Building Permit(s)	Date	Number	Status

[ ] Improved [X] Vacant

Public Improvements

	Dirt Road
X	Gravel Road
	Paved Road
	Storm Sewer
	Sidewalk
	Water
	Sewer
X	Electric
	Gas
	Curb
	Street Lights
	Standard Utilities
	Underground Utils.

Topography of Site

X	Level
X	Rolling
	Low
	High
	Landscaped
	Swamp
X	Wooded
	Pond
	Waterfront
	Ravine
	Wetland
	Flood Plain
X	OPEN/PINES

Who	When	What
GLA	10/31/2022	INSPECTION
GLA	05/30/2017	INSPECTION

Land Value Estimates for Land Table 4010.LAND VALUES

Description	Frontage	Depth	* Factors * Front	Depth	Rate	%Adj.	Reason	Value
ACREAGE			9.860 Acres		4,651	100		45,857
ROW			0.140 Acres		0	100		0
			10.00 Total Acres		Total Est. Land Value =			45,857

Year	Land Value	Building Value	Assessed Value	Board of Review	Tribunal/ Other	Taxable Value
2024	22,900	0	22,900			13,545C
2023	12,900	0	12,900			12,900S
2022	11,900	0	11,900			9,646C
2021	12,000	0	12,000			9,338C

The Equalizer. Copyright (c) 1999 - 2009. Licensed To: Township of Greenwood, County of Wexford, Michigan

*** Information herein deemed reliable but not guaranteed***

Parcel Number: 2410-22-4203 Jurisdiction: GREENWOOD TWP County: WEXFORD Printed on 02/15/2024

Grantor	Grantee	Sale Price	Sale Date	Inst. Type	Terms of Sale	Liber & Page	Verified By	Prcnt. Trans.
HENRY, RAY A.	MARTIN, BRYAN J & RENEE M	30,000	03/03/2022	WD	19-MULTI PARCEL ARM'S LEN	692/1099	DEED	100.0

Property Address

Owner's Name/Address

MARTIN, BRYAN J & RENEE M
497 E LAKE MITCHELL DR
CADILLAC MI 49601

Tax Description

PAR COM AT S 1/4 COR; TH E 164.61 FT TO POB: TH E 164.62 FT; TH N 2649.94 FT TO E/W 1/4 LINE; TH W 164.61 FT; S 2650.32 FT TO POB. AKA PARCEL "B" 10.01 A. GW. SEC. 22 T24N R10W -MANTON-

Comments/Influences

Class: RESIDENTIAL-IMPROV Zoning:

School: MANTON CONSOLIDATED SCHOOLS

P.R.E. 0%

:

2024 Est TCV 65,353 TCV/TFA: 0.00

Building Permit(s)	Date	Number	Status

X Improved | Vacant

	Public Improvements
	Dirt Road
X	Gravel Road
	Paved Road
	Storm Sewer
	Sidewalk
	Water
	Sewer
X	Electric
	Gas
	Curb
	Street Lights
	Standard Utilities
	Underground Utils.

	Topography of Site
X	Level
X	Rolling
	Low
	High
	Landscaped
	Swamp
X	Wooded
	Pond
	Waterfront
	Ravine
	Wetland
	Flood Plain
X	OPEN/PINES

Who	When	What
GLA	05/30/2017	INSPECTION
GLA	08/01/2014	INSPECTION

Land Value Estimates for Land Table 4010.LAND VALUES

Description	Frontage	Depth	* Factors * Front	Depth	Rate	%Adj.	Reason	Value
ACREAGE			9.870 Acres		4,650	100		45,892
ROW			0.140 Acres		0	100		0
			10.01 Total Acres		Total Est. Land Value =			45,892

Land Improvement Cost Estimates

Description	Rate	Size	% Good	Cash Value
Wood Frame	32.53	80	41	1,067
Total Estimated Land Improvements True Cash Value =				1,067

Year	Land Value	Building Value	Assessed Value	Board of Review	Tribunal/ Other	Taxable Value
2024	22,900	9,800	32,700			22,050C
2023	13,000	8,000	21,000			21,000S
2022	11,900	6,900	18,800			7,369C
2021	12,000	6,900	18,900			7,134C

The Equalizer. Copyright (c) 1999 - 2009.
Licensed To: Township of Greenwood, County of Wexford, Michigan

*** Information herein deemed reliable but not guaranteed***

Building Type

X	Single Family
	Mobile Home
	Town Home
	Duplex
	A-Frame
X	Wood Frame

Building Style: PLAIN

Yr Built	Remodeled
0	0

Condition: Good

Room List

	Basement
	1st Floor
	2nd Floor
	Bedrooms

(1) Exterior

	Wood/Shingle
X	Aluminum/Vinyl
	Brick
X	Insulation

(2) Windows

	Many		Large
X	Avg.	X	Avg.
	Few		Small

	Wood Sash
	Metal Sash
X	Vinyl Sash
	Double Hung
	Horiz. Slide
	Casement
	Double Glass
	Patio Doors
X	Storms & Screens

(3) Roof

X	Gable		Gambrel
	Hip		Mansard
	Flat		Shed

X	Asphalt Shingle

Chimney:

(3) Roof (cont.)

	Eavestrough
X	Insulation
0	Front Overhang
0	Other Overhang

(4) Interior

X	Drywall		Plaster
	Paneled		Wood T&G

Trim & Decoration

	Ex	X	Ord		Min

Size of Closets

	Lg	X	Ord		Small

Doors:		Solid	X	H.C.	

(5) Floors

Kitchen:
Other: Linoleum
Other: Carpeted

(6) Ceilings

X	Drywall

(7) Excavation

Basement: 0 S.F.
Crawl: 0 S.F.
Slab: 0 S.F.
Height to Joists: 0.0

(8) Basement

	Conc. Block
	Poured Conc.
	Stone
	Treated Wood
	Concrete Floor

(9) Basement Finish

	Recreation SF
	Living SF
	Walkout Doors (B)
	No Floor SF
	Walkout Doors (A)

(10) Floor Support

Joists:
Unsupported Len:
Cntr.Sup:

(11) Heating/Cooling

X	Gas		Oil		Elec.
	Wood		Coal		Steam

	Forced Air w/o Ducts
X	Forced Air w/ Ducts
	Forced Hot Water
	Electric Baseboard
	Elec. Ceil. Radiant
	Radiant (in-floor)
	Electric Wall Heat
	Space Heater
	Wall/Floor Furnace
	Forced Heat & Cool
	Heat Pump
	No Heating/Cooling
	Central Air
	Wood Furnace

(12) Electric

150	Amps Service

No./Qual. of Fixtures

	Ex.	X	Ord.		Min

No. of Elec. Outlets

	Many	X	Ave.		Few

(13) Plumbing

	Average Fixture(s)
1	3 Fixture Bath
	2 Fixture Bath
	Softener, Auto
	Softener, Manual
	Solar Water Heat
	No Plumbing
	Extra Toilet
	Extra Sink
	Separate Shower
	Ceramic Tile Floor
	Ceramic Tile Wains
	Ceramic Tub Alcove
	Vent Fan

(14) Water/Sewer

	Public Water
	Public Sewer
1	Water Well
1	1000 Gal Septic
	2000 Gal Septic

Lump Sum Items:

(15) Built-ins

	Appliance Allow.
	Cook Top
	Dishwasher
	Garbage Disposal
	Bath Heater
	Vent Fan
	Hot Tub
	Unvented Hood
	Vented Hood
	Intercom
	Jacuzzi Tub
	Jacuzzi repl.Tub
	Oven
	Microwave
	Standard Range
	Self Clean Range
	Sauna
	Trash Compactor
	Central Vacuum
	Security System

(15) Fireplaces

	Interior 1 Story
	Interior 2 Story
	2nd/Same Stack
	Two Sided
	Exterior 1 Story
	Exterior 2 Story
	Prefab 1 Story
	Prefab 2 Story
	Heat Circulator
	Raised Hearth
	Wood Stove
	Direct-Vented Gas

Class: CD
Effec. Age: 20
Floor Area: 0
Total Base New : 18,192 E.C.F.
Total Depr Cost: 14,182 X 1.297
Estimated T.C.V: 18,394

(16) Porches/Decks

Area	Type
140	WSEP (1 Story)

(17) Garage

Year Built:
Car Capacity:
Class:
Exterior:
Brick Ven.:
Stone Ven.:
Common Wall:
Foundation:
Finished ?:
Auto. Doors:
Mech. Doors:
Area:
% Good:
Storage Area:
No Conc. Floor:

Bsmnt Garage:

Carport Area:
Roof:

Cost Est. for Res. Bldg: 1 Single Family PLAIN Cls CD Blt 0
(11) Heating System: Forced Air w/ Ducts
Ground Area = 0 SF Floor Area = 0 SF.
Phy/Ab.Phy/Func/Econ/Comb. % Good=80/100/100/100/80
Building Areas

Stories / Exterior / Foundation / Other Additions/Adjustments	Size	Cost New	Depr. Cost	
Water/Sewer				
1000 Gal Septic	1	4,582	3,666	
Water Well, 100 Feet	1	5,680	4,544	
Porches				
WSEP (1 Story)	140	6,978	5,582	
Local Cost Items				
TT	112	952	390	*4
Totals:		18,192	14,182	

Notes:

ECF (RESIDENTIAL) 1.297 => TCV: 18,394

*** Information herein deemed reliable but not guaranteed***

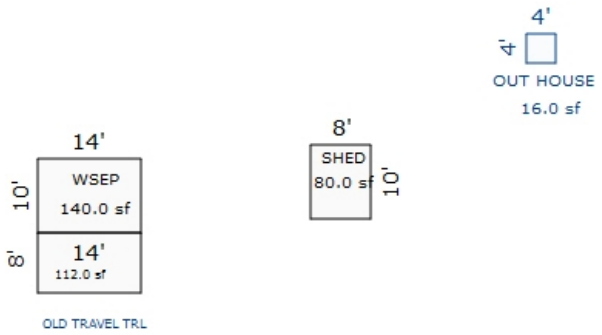

Sketch by Apex Sketch

*** Information herein deemed reliable but not guaranteed***

Parcel Number: 2410-22-4204 Jurisdiction: GREENWOOD TWP County: WEXFORD Printed on 02/15/2024

Grantor	Grantee	Sale Price	Sale Date	Inst. Type	Terms of Sale	Liber & Page	Verified By	Prcnt. Trans.
HOLLINGSWORTH, DIANE TRUST	HOLLINGSWORTH, FLOYD L	0	06/26/2008	QC	09-FAMILY	612/2327	DEED	50.0
HOLLINGSWORTH, THOMAS & DI	HOLLINGSWORTH, DIANE TRUST	0	02/08/2007	WD	09-FAMILY	597:1401	DEED	0.0
BIGELOW, CHARLES C.	HOLLINGSWORTH, FLOYD L.	12,900	06/10/1998	WD	03-ARM'S LENGTH	361:652	DEED	0.0

Property Address

Owner's Name/Address

HOLLINGSWORTH, FLOYD L
3841 KENT RD
FREELAND MI 48623

Tax Description

COM AT S 1/4 COR OF SEC; TH E 956.58 FT TO POB: E 329.29 FT TO E 1/8 LINE; N 2649.53 FT TO E/W 1/4 LINE; W 329.28 FT; S 2649.71 FT TO POB. AKA PAR "D" 20.02 A M/L GW SEC 22 T24N R10W -MANTON- [[ASSESSED W/22-4201 '98

Comments/Influences

Class: RESIDENTIAL-IMPROV Zoning:

School: MANTON CONSOLIDATED SCHOOLS

P.R.E. 0%

:

2024 Est TCV 71,927 TCV/TFA: 143.28

Building Permit(s)	Date	Number	Status

X Improved | Vacant

Public Improvements

	Dirt Road
X	Gravel Road
	Paved Road
	Storm Sewer
	Sidewalk
	Water
	Sewer
X	Electric
	Gas
	Curb
	Street Lights
	Standard Utilities
	Underground Utils.

Topography of Site

X	Level
X	Rolling
X	Low
	High
	Landscaped
	Swamp
X	Wooded
	Pond
	Waterfront
	Ravine
	Wetland
	Flood Plain
X	OPEN/PINES

Who	When	What
GLA	05/30/2017	INSPECTION

Land Value Estimates for Land Table 4010.LAND VALUES

Description	Frontage	Depth	* Factors * Front	Depth	Rate	%Adj.	Reason	Value
ACREAGE			19.760 Acres		3,200	100		63,232
ROW			0.260 Acres		0	100		0
			20.02 Total Acres		Total Est. Land Value =			63,232

Land Improvement Cost Estimates

Description	Rate	Size	% Good	Cash Value
Wood Frame	28.62	110	44	1,385
Total Estimated Land Improvements True Cash Value =				1,385

Year	Land Value	Building Value	Assessed Value	Board of Review	Tribunal/ Other	Taxable Value
2024	31,600	4,400	36,000			19,294C
2023	25,700	3,600	29,300			18,376C
2022	21,800	3,100	24,900			17,501C
2021	19,900	3,100	23,000			16,942C

The Equalizer. Copyright (c) 1999 - 2009. Licensed To: Township of Greenwood, County of Wexford, Michigan

*** Information herein deemed reliable but not guaranteed***

Building Type

X	Single Family
	Mobile Home
	Town Home
	Duplex
	A-Frame
X	Wood Frame

Building Style: PLAIN

Yr Built	Remodeled
0	0

Condition: Good

Room List

	Basement
	1st Floor
	2nd Floor
	Bedrooms

(1) Exterior

	Wood/Shingle
X	Aluminum/Vinyl
	Brick
X	Insulation

(2) Windows

	Many		Large
X	Avg.	X	Avg.
	Few		Small

	Wood Sash
	Metal Sash
X	Vinyl Sash
	Double Hung
	Horiz. Slide
	Casement
	Double Glass
	Patio Doors
X	Storms & Screens

(3) Roof

X	Gable		Gambrel
	Hip		Mansard
	Flat		Shed

X	Asphalt Shingle

Chimney:

(3) Roof (cont.)

	Eavestrough
X	Insulation
0	Front Overhang
0	Other Overhang

(4) Interior

X	Drywall		Plaster
	Paneled		Wood T&G

Trim & Decoration

	Ex	X	Ord		Min

Size of Closets

	Lg	X	Ord		Small

Doors:		Solid	X	H.C.	

(5) Floors

Kitchen:
Other: Linoleum
Other: Carpeted

(6) Ceilings

X	Drywall

(7) Excavation

Basement: 0 S.F.
Crawl: 0 S.F.
Slab: 0 S.F.
Height to Joists: 0.0

(8) Basement

	Conc. Block
	Poured Conc.
	Stone
	Treated Wood
	Concrete Floor

(9) Basement Finish

	Recreation SF
	Living SF
	Walkout Doors (B)
	No Floor SF
	Walkout Doors (A)

(10) Floor Support

Joists:
Unsupported Len:
Cntr.Sup:

(11) Heating/Cooling

X	Gas		Oil		Elec.
	Wood		Coal		Steam

	Forced Air w/o Ducts
X	Forced Air w/ Ducts
	Forced Hot Water
	Electric Baseboard
	Elec. Ceil. Radiant
	Radiant (in-floor)
	Electric Wall Heat
	Space Heater
	Wall/Floor Furnace
	Forced Heat & Cool
	Heat Pump
	No Heating/Cooling

	Central Air
	Wood Furnace

(12) Electric

150	Amps Service

No./Qual. of Fixtures

	Ex.	X	Ord.		Min

No. of Elec. Outlets

	Many	X	Ave.		Few

(13) Plumbing

1	Average Fixture(s)
	3 Fixture Bath
	2 Fixture Bath
	Softener, Auto
	Softener, Manual
	Solar Water Heat
	No Plumbing
	Extra Toilet
	Extra Sink
	Separate Shower
	Ceramic Tile Floor
	Ceramic Tile Wains
	Ceramic Tub Alcove
	Vent Fan

(14) Water/Sewer

	Public Water
	Public Sewer
	Water Well
	1000 Gal Septic
	2000 Gal Septic

Lump Sum Items:

(15) Built-ins

	Appliance Allow.
	Cook Top
	Dishwasher
	Garbage Disposal
	Bath Heater
	Vent Fan
	Hot Tub
	Unvented Hood
	Vented Hood
	Intercom
	Jacuzzi Tub
	Jacuzzi repl.Tub
	Oven
	Microwave
	Standard Range
	Self Clean Range
	Sauna
	Trash Compactor
	Central Vacuum
	Security System

(15) Fireplaces

	Interior 1 Story
	Interior 2 Story
	2nd/Same Stack
	Two Sided
	Exterior 1 Story
	Exterior 2 Story
	Prefab 1 Story
	Prefab 2 Story
	Heat Circulator
	Raised Hearth
	Wood Stove
	Direct-Vented Gas

Class: CD
Effec. Age: 61
Floor Area: 502
Total Base New : 62,684 E.C.F.
Total Depr Cost: 5,636 X 1.297
Estimated T.C.V: 7,310

(16) Porches/Decks

Area	Type

(17) Garage

Year Built:
Car Capacity:
Class:
Exterior:
Brick Ven.:
Stone Ven.:
Common Wall:
Foundation:
Finished ?:
Auto. Doors:
Mech. Doors:
Area:
% Good:
Storage Area:
No Conc. Floor:

Bsmnt Garage:

Carport Area:
Roof:

Cost Est. for Res. Bldg: 1 Single Family PLAIN Cls CD Blt 0
(11) Heating System: Forced Air w/ Ducts
Ground Area = 502 SF Floor Area = 502 SF.
Phy/Ab.Phy/Func/Econ/Comb. % Good=45/100/20/100/9
Functional Depreciation because of: OLD BUS AND POOR WOKMANSHIP
Building Areas

Stories	Exterior	Foundation	Size	Cost New	Depr. Cost	
1 Story	Siding	Piers	502			
			Total:	59,486	5,354	
Other Additions/Adjustments						
Local Cost Items						
WOOD LEAN TO DIRT			668	2,872	253	*4
FREE STANDING ROOF			45	326	29	*4
			Totals:	62,684	5,636	

Notes:

ECF (RESIDENTIAL) 1.297 => TCV: 7,310

*** Information herein deemed reliable but not guaranteed***

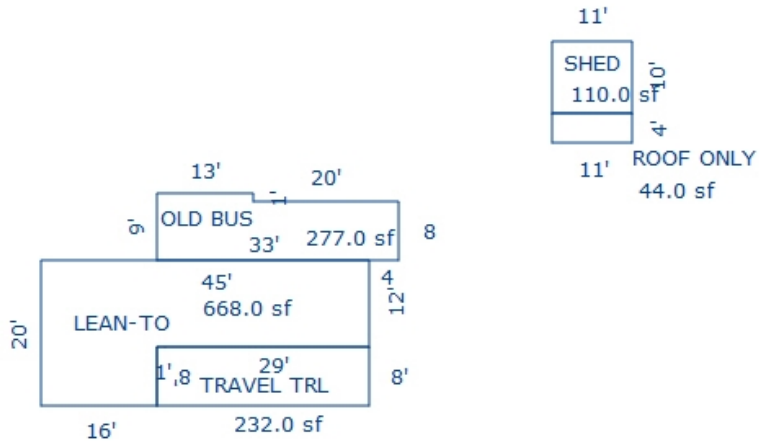

Sketch by Apex Sketch

*** Information herein deemed reliable but not guaranteed***

Parcel Number: 2410-23-1101 Jurisdiction: GREENWOOD TWP County: WEXFORD Printed on 02/15/2024

Grantor	Grantee	Sale Price	Sale Date	Inst. Type	Terms of Sale	Liber & Page	Verified By	Prcnt. Trans.

Property Address	Class: AGRICULTURAL-VACAN	Zoning:	Building Permit(s)	Date	Number	Status
	School: MANTON CONSOLIDATED SCHOOLS					
Owner's Name/Address	P.R.E. 0%					
	:					
STATE OF MICHIGAN P O BOX 30735 GRANTS ADMINISTRATION LANSING MI 48909-8235	2024 Est TCV 0					

Tax Description

N 1/2 OF NE 1/4 80 A. GW. SEC. 23 T24N R10W -MANTON-

Comments/Influences

	Improved	X	Vacant

	Public Improvements
	Dirt Road
X	Gravel Road
X	Paved Road
	Storm Sewer
	Sidewalk
	Water
	Sewer
X	Electric
	Gas
	Curb
	Street Lights
	Standard Utilities
	Underground Utils.

	Topography of Site
	Level
X	Rolling
	Low
	High
	Landscaped
	Swamp
X	Wooded
	Pond
	Waterfront
	Ravine
	Wetland
	Flood Plain
X	PINES/OPEN

Who	When	What
GLA	05/30/2017	INSPECTION

Land Value Estimates for Land Table 4010.LAND VALUES

Description	Frontage	Depth	* Factors * Front	Depth	Rate	%Adj.	Reason	Value
ACREAGE			76.424 Acres		2,555	100		195,237
			3.575 Acres		0	100		0
			80.00 Total Acres		Total Est. Land Value =			195,237

Year	Land Value	Building Value	Assessed Value	Board of Review	Tribunal/ Other	Taxable Value
2024	EXEMPT	EXEMPT	EXEMPT			EXEMPT
2023	EXEMPT	EXEMPT	EXEMPT			EXEMPT
2022	0	0	0			0
2021	0	0	0			0

The Equalizer. Copyright (c) 1999 - 2009. Licensed To: Township of Greenwood, County of Wexford, Michigan

*** Information herein deemed reliable but not guaranteed***

Parcel Number: 2410-23-1301 Jurisdiction: GREENWOOD TWP County: WEXFORD Printed on 02/15/2024

Grantor	Grantee	Sale Price	Sale Date	Inst. Type	Terms of Sale	Liber & Page	Verified By	Prcnt. Trans.

Property Address	Class: RESIDENTIAL-IMPROV	Zoning:	Building Permit(s)	Date	Number	Status
8573 N 35 RD	School: MANTON CONSOLIDATED SCHOOLS		Manufactured home	07/25/2018	PB18-0127	COMPLETE
	P.R.E. 100% / /					
Owner's Name/Address	:					
WIERENGA, BETTY L. 8573 N 35 RD MANTON MI 49663	2024 Est TCV 280,328 TCV/TFA: 192.53					

Tax Description

S 1/2 OF NE 1/4 EXC E 105 RDS OF N 25 RDS & EXC E 18 RDS OF S 10 RDS & EXC COM 25 RDS S OF E 1/8-POST IN NE 1/4: S 30 RES; W 16 RDS; N 30 RDS; E TO BEG. 59.47 A. GW. SEC. 23 T24N R10W -MANTON-

Comments/Influences

DEFAULT COMMENTS BETTY HOME PHONE 231-884-5436

The Equalizer. Copyright (c) 1999 - 2009. Licensed To: Township of Greenwood, County of Wexford, Michigan

X	Improved		Vacant

	Public Improvements
	Dirt Road
X	Gravel Road
X	Paved Road
	Storm Sewer
	Sidewalk
	Water
	Sewer
X	Electric
	Gas
	Curb
	Street Lights
	Standard Utilities
	Underground Utils.

	Topography of Site
	Level
X	Rolling
	Low
	High
	Landscaped
	Swamp
X	Wooded
	Pond
	Waterfront
	Ravine
	Wetland
	Flood Plain
X	PINES/OPEN

Who	When	What
GLA	05/30/2017	INSPECTION

Land Value Estimates for Land Table 4010.LAND VALUES

Description	Frontage	Depth	* Factors * Front	Depth	Rate	%Adj.	Reason	Value
ACREAGE			59.260 Acres		2,646	100		156,824
ROW			0.210 Acres		0	100		0
			59.47 Total Acres		Total Est. Land Value =			156,824

Year	Land Value	Building Value	Assessed Value	Board of Review	Tribunal/ Other	Taxable Value
2024	78,400	61,800	140,200			60,783C
2023	75,900	51,400	127,300			57,889C
2022	50,400	44,900	95,300			55,133C
2021	48,500	40,300	88,800			53,372C

*** Information herein deemed reliable but not guaranteed***

Building Type

	Single Family
X	Mobile Home
	Town Home
	Duplex
	A-Frame

X	Wood Frame

Building Style: SWT/DWT

Yr Built	Remodeled
2018	0

Condition: Good

Room List

	Basement
	1st Floor
	2nd Floor
	Bedrooms

(1) Exterior

	Wood/Shingle
X	Aluminum/Vinyl
	Brick
X	Insulation

(2) Windows

	Many		Large
X	Avg.	X	Avg.
	Few		Small

	Wood Sash
	Metal Sash
X	Vinyl Sash
	Double Hung
	Horiz. Slide
	Casement
	Double Glass
	Patio Doors
X	Storms & Screens

(3) Roof

X	Gable		Gambrel
	Hip		Mansard
	Flat		Shed

X	Asphalt Shingle

Chimney:

(3) Roof (cont.)

	Eavestrough
X	Insulation
0	Front Overhang
0	Other Overhang

(4) Interior

X	Drywall		Plaster
	Paneled		Wood T&G

Trim & Decoration

	Ex	X	Ord		Min

Size of Closets

	Lg	X	Ord		Small

Doors:		Solid	X	H.C.	

(5) Floors

Kitchen:
Other: Linoleum
Other: Carpeted

(6) Ceilings

X	Drywall		

(7) Excavation

Basement: 0 S.F.
Crawl: 0 S.F.
Slab: 0 S.F.
Height to Joists: 0.0

(8) Basement

	Conc. Block
	Poured Conc.
	Stone
	Treated Wood
	Concrete Floor

(9) Basement Finish

	Recreation SF
	Living SF
	Walkout Doors (B)
	No Floor SF
	Walkout Doors (A)

(10) Floor Support

Joists:
Unsupported Len:
Cntr.Sup:

(11) Heating/Cooling

X	Gas		Oil		Elec.
	Wood		Coal		Steam

X	Forced Warm Air
	Wall Furnace
	Warm & Cool Air
	Heat Pump

	Central Air
	Wood Furnace

(12) Electric

150	Amps Service

No./Qual. of Fixtures

	Ex.	X	Ord.		Min

No. of Elec. Outlets

	Many	X	Ave.		Few

(13) Plumbing

	Average Fixture(s)
1	3 Fixture Bath
	2 Fixture Bath
	Softener, Auto
	Softener, Manual
	Solar Water Heat
	No Plumbing
	Extra Toilet
	Extra Sink
	Separate Shower
	Ceramic Tile Floor
	Ceramic Tile Wains
	Ceramic Tub Alcove
	Vent Fan

(14) Water/Sewer

	Public Water
	Public Sewer
1	Water Well
1	1000 Gal Septic
	2000 Gal Septic

Lump Sum Items:

(15) Built-ins

	Appliance Allow.
	Cook Top
	Dishwasher
	Garbage Disposal
	Bath Heater
	Vent Fan
	Hot Tub
	Unvented Hood
	Vented Hood
	Intercom
	Jacuzzi Tub
	Jacuzzi repl.Tub
	Oven
	Microwave
	Standard Range
	Self Clean Range
	Sauna
	Trash Compactor
	Central Vacuum
	Security System

(15) Fireplaces

	Interior 1 Story
	Interior 2 Story
	2nd/Same Stack
	Two Sided
	Exterior 1 Story
	Exterior 2 Story
	Prefab 1 Story
	Prefab 2 Story
	Heat Circulator
	Raised Hearth
	Wood Stove
	Direct-Vented Gas

Class: Fair
Effec. Age: 5
Floor Area:
Total Base New : 154,313 E.C.F.
Total Depr Cost: 95,223 X 1.297
Estimated T.C.V: 123,504

(16) Porches/Decks

Area	Type
44	WPP

(17) Garage

Year Built:
Car Capacity:
Class: CD
Exterior: Pole
Brick Ven.: 0
Stone Ven.: 0
Common Wall: Detache
Foundation: 18 Inch
Finished ?:
Auto. Doors: 0
Mech. Doors: 0
Area: 3840
% Good: 25
Storage Area: 0
No Conc. Floor: 3840

Bsmnt Garage:

Carport Area:
Roof:

Cost Est. for Res. Bldg: 1 Mobile Home SWT/DWT Cls Fair Blt 2018
(11) Heating System: Wall Furnace
Ground Area = 1456 SF Floor Area = 1456 SF.
Phy/Ab.Phy/Func/Econ/Comb. % Good=85/100/100/100/85
Building Areas

Type	Ext. Walls	Roof/Fnd.	Size	Cost New	Depr. Cost	
Main Home	Siding	Comp.Shingle	1456			
			Total:	77,777	66,110	
Other Additions/Adjustments						
Skirting, Metal or Vinyl, Vertical			160	1,784	1,516	
Water/Sewer						
1000 Gal Septic			1	4,582	3,895	
Water Well, 100 Feet			1	5,680	4,828	
Porches						
WPP			44	1,804	1,533	
Garages						
Class: CD Exterior: Pole (Unfinished)						
Base Cost			3840	83,520	20,880	*2
No Concrete Floor			3840	-23,616	-5,904	
Local Cost Items						
POLE LEANTO DIRT			752	2,782	2,365	
			Totals:	154,313	95,223	

Notes:
ECF (RESIDENTIAL) 1.297 => TCV: 123,504

*** Information herein deemed reliable but not guaranteed***

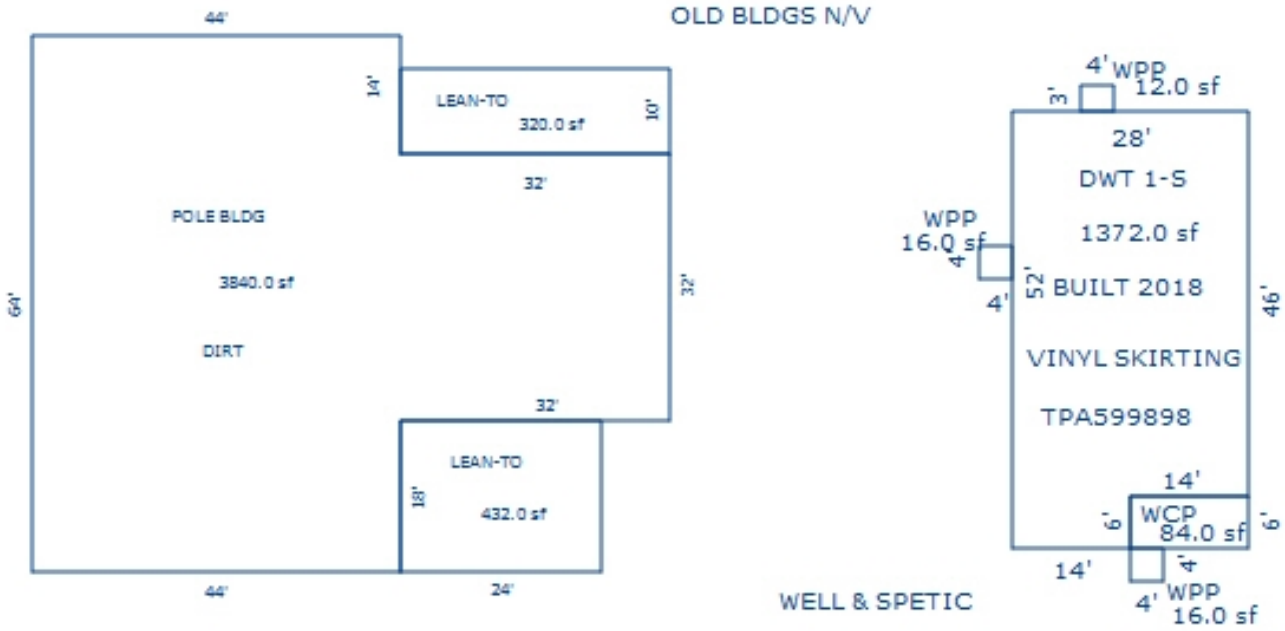

Sketch by Apex Sketch

*** Information herein deemed reliable but not guaranteed***

Parcel Number: 2410-23-1401 Jurisdiction: GREENWOOD TWP County: WEXFORD Printed on 02/15/2024

Grantor	Grantee	Sale Price	Sale Date	Inst. Type	Terms of Sale	Liber & Page	Verified By	Prcnt. Trans.
WAITE, RONALD L & DIANNE I	ROSE, RYAN & JOANNA	12,000	01/15/2016	WD	03-ARM'S LENGTH	676/2220	DEED	100.0
WAITE, RON	WAITE, RONALD L & DIANNE I	0	03/08/2010	QC	09-FAMILY	628/865	DEED	0.0
WAITE, EVERETT	WAITE, RON	0	09/26/2006	WD	09-FAMILY	593/280	DEED	0.0

Property Address

Owner's Name/Address

ROSE, RYAN & JOANNA
2899 WHITE TRL DR
SIDNEY MI 48885

Tax Description

E 105 RDS OF N 25 RDS OF S 1/2 OF NE 1/4 EXC E 37 1/2 RDS OF N 11 1/2 RDS THEREOF; & EXC S 1 1/2 RDS OF PAR COM 12 1/2 RDS W OF NE COR OF S 1/2 OF NE 1/4; W 12 1/2 RDS; S 12 1/2 RDS; E 12 1/2 RDS; N 12 1/2 RDS TO POB & EXC E 50 RDS OF S 11 1/2 RDS THEREOF. --11.68 A M/L-- GW. SEC. 23 T24N R10W -MANTON-

Comments/Influences

Class: RESIDENTIAL-VACANT Zoning:

School: MANTON CONSOLIDATED SCHOOLS

P.R.E. 0%

:

2024 Est TCV 46,904

Building Permit(s)	Date	Number	Status

	Improved	X	Vacant

	Public Improvements
X	Dirt Road
X	Gravel Road
	Paved Road
	Storm Sewer
	Sidewalk
	Water
	Sewer
X	Electric
	Gas
	Curb
	Street Lights
	Standard Utilities
	Underground Utils.

	Topography of Site
X	Level
	Rolling
	Low
	High
	Landscaped
	Swamp
	Wooded
	Pond
	Waterfront
	Ravine
	Wetland
	Flood Plain
X	PINES

Who	When	What
GLA	05/30/2017	INSPECTION

Land Value Estimates for Land Table 4010.LAND VALUES

Description	Frontage	Depth	* Factors * Front	Depth	Rate	%Adj.	Reason	Value
ACREAGE			11.680 Acres		4,016	100		46,904
			0.030 Acres		0	100		0
			11.71 Total Acres		Total Est. Land Value =			46,904

Year	Land Value	Building Value	Assessed Value	Board of Review	Tribunal/ Other	Taxable Value
2024	23,500	0	23,500			12,708C
2023	15,200	0	15,200			12,103C
2022	13,800	0	13,800			11,527C
2021	14,000	0	14,000			11,159C

The Equalizer. Copyright (c) 1999 - 2009. Licensed To: Township of Greenwood, County of Wexford, Michigan

*** Information herein deemed reliable but not guaranteed***

Parcel Number: 2410-23-1402 Jurisdiction: GREENWOOD TWP County: WEXFORD Printed on 02/15/2024

Grantor	Grantee	Sale Price	Sale Date	Inst. Type	Terms of Sale	Liber & Page	Verified By	Prcnt. Trans.
GRUBER, GERALD P TRUST	LEMAIRE, MATTHEW C & DEANN	5,000	10/23/2020	WD	03-ARM'S LENGTH	688/1439	AGENT	100.0
GRUBER, GERALD P.	GRUBER, GERALD P TRUST	0	03/19/2015	QC	14-INTO/OUT OF TRUST	674/1912	DEED	0.0

Property Address

Class: RESIDENTIAL-VACANT Zoning:

School: MANTON CONSOLIDATED SCHOOLS

P.R.E. 0%

:

2024 Est TCV 9,858

Building Permit(s)	Date	Number	Status

Owner's Name/Address

LEMAIRE, MATTHEW C & DEANN M
6950 FIVE PT. HWY.
EATON RAPIDS MI 48827

	Improved	X	Vacant

Land Value Estimates for Land Table 4010.LAND VALUES

Description	Frontage	Depth	* Factors * Front	Depth	Rate	%Adj.	Reason	Value
HELSEL RIV LOW	206.00	190.00	1.0000	0.0000	315	100*		0
ACREAGE			0.900 Acres		10,953	100		9,858

* denotes lines that do not contribute to the total acreage calculation.

206 Actual Front Feet, 0.90 Total Acres Total Est. Land Value = 9,858

Tax Description

PAR COM 25 RDS W OF NE COR OF S 1/2 OF NE 1/4; S 11 1/2 RDS; W 12 1/2 RDS; N 11 1/2 RDS; E TO BEG. --.9 A M/L-- GW. SEC. 23 T24N R10W -MANTON-

Comments/Influences

	Public Improvements
X	Dirt Road
X	Gravel Road
X	Paved Road
	Storm Sewer
	Sidewalk
	Water
	Sewer
X	Electric
	Gas
	Curb
	Street Lights
	Standard Utilities
	Underground Utils.

	Topography of Site
	Level
X	Rolling
	Low
	High
	Landscaped
	Swamp
X	Wooded
	Pond
	Waterfront
	Ravine
	Wetland
	Flood Plain
X	PINES/OPEN

Who	When	What
GLA	05/30/2017	INSPECTION
LM	10/28/2011	APPR INSPE

Year	Land Value	Building Value	Assessed Value	Board of Review	Tribunal/ Other	Taxable Value
2024	4,900	0	4,900			2,535C
2023	2,700	0	2,700			2,415C
2022	2,300	0	2,300			2,300S
2021	2,700	0	2,700			2,700S

The Equalizer. Copyright (c) 1999 - 2009. Licensed To: Township of Greenwood, County of Wexford, Michigan

*** Information herein deemed reliable but not guaranteed***

Parcel Number: 2410-23-1403 Jurisdiction: GREENWOOD TWP County: WEXFORD Printed on 02/15/2024

Grantor	Grantee	Sale Price	Sale Date	Inst. Type	Terms of Sale	Liber & Page	Verified By	Prcnt. Trans.
ALLEN, STEPHEN J	ALLEN, STEPHEN J LE & ERIC	0	02/10/2009	QC	18-LIFE ESTATE	617/2602	DEED	0.0

Property Address

8743 N 35 RD

Owner's Name/Address

ALLEN, STEPHEN J LE & ERIC J ALLEN
6333 NORFOLK
MUSKEGON MI 49444

Tax Description

PAR COM 12 1/2 RDS W OF NE COR OF S 1/2 OF NE 1/4: W 12 1/2 RDS; S 12 1/2 RDS; E 12 1/2 RDS; N TO BEG EXC S 1 RD FOR ROAD R/W --.98 A M/L-- GW. SEC. 23 T24N R10W -MANTON-

Comments/Influences

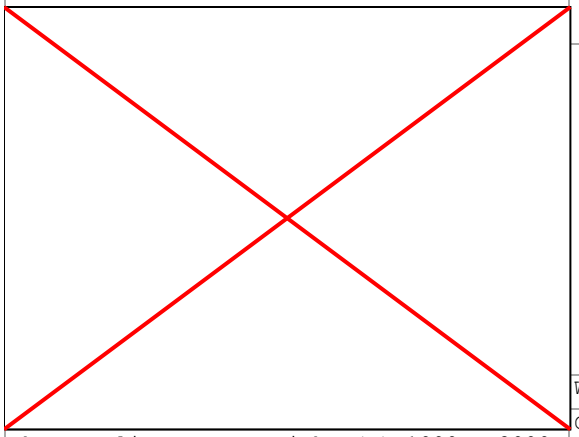

The Equalizer. Copyright (c) 1999 - 2009. Licensed To: Township of Greenwood, County of Wexford, Michigan

Class: RESIDENTIAL-IMPROV Zoning:

School: MANTON CONSOLIDATED SCHOOLS

P.R.E. 0%

:

2024 Est TCV 156,264 TCV/TFA: 197.30

Building Permit(s)	Date	Number	Status
Res. Single Family	03/24/2009	PB09-0046	
Res. Single Family	03/23/2009	PE09-18450	
Mechanical	03/23/2009	PM09-10503	
Res. Single Family	03/23/2009	PP09-4808	

X	Improved		Vacant

	Public Improvements
	Dirt Road
X	Gravel Road
X	Paved Road
	Storm Sewer
	Sidewalk
	Water
	Sewer
X	Electric
	Gas
	Curb
	Street Lights
	Standard Utilities
	Underground Utils.

	Topography of Site
	Level
X	Rolling
	Low
	High
	Landscaped
	Swamp
X	Wooded
	Pond
	Waterfront
	Ravine
	Wetland
	Flood Plain
X	PINES/OPEN

Who	When	What
GLA	05/30/2017	INSPECTION

Land Value Estimates for Land Table 4010.LAND VALUES

Description	Frontage	Depth	* Factors * Front	Depth	Rate	%Adj.	Reason	Value
HELSEL RIV LOW	206.00	207.20	1.0000	0.0000	315	100*		0
ACREAGE			0.980 Acres		10,953	100		10,734

* denotes lines that do not contribute to the total acreage calculation.

206 Actual Front Feet, 0.98 Total Acres Total Est. Land Value = 10,734

Year	Land Value	Building Value	Assessed Value	Board of Review	Tribunal/ Other	Taxable Value
2024	5,400	72,700	78,100			22,838C
2023	2,900	59,300	62,200			21,751C
2022	2,500	49,900	52,400			20,716C
2021	2,900	50,500	53,400			20,055C

*** Information herein deemed reliable but not guaranteed***

Building Type

X	Single Family
	Mobile Home
	Town Home
	Duplex
	A-Frame
X	Wood Frame

Building Style: PLAIN

Yr Built	Remodeled
2009	0

Condition: Average

Room List

	Basement
	1st Floor
	2nd Floor
	Bedrooms

(1) Exterior

X	Wood/Shingle
	Aluminum/Vinyl
	Brick
	Insulation

(2) Windows

X	Many		Large
	Avg.	X	Avg.
	Few		Small

	Wood Sash
	Metal Sash
	Vinyl Sash
	Double Hung
	Horiz. Slide
	Casement
	Double Glass
	Patio Doors
	Storms & Screens

(3) Roof

X	Gable		Gambrel
	Hip		Mansard
	Flat		Shed

X	Asphalt Shingle

Chimney: Brick

(3) Roof (cont.)

	Eavestrough
	Insulation
0	Front Overhang
0	Other Overhang

(4) Interior

	Drywall		Plaster
	Paneled		Wood T&G

Trim & Decoration

	Ex	X	Ord		Min

Size of Closets

	Lg	X	Ord		Small

Doors:		Solid	X	H.C.	

(5) Floors

Kitchen:
Other:
Other:

(6) Ceilings

(7) Excavation

Basement: 792 S.F.
Crawl: 0 S.F.
Slab: 0 S.F.
Height to Joists: 0.0

(8) Basement

	Conc. Block
	Poured Conc.
	Stone
	Treated Wood
	Concrete Floor

(9) Basement Finish

	Recreation SF
	Living SF
	Walkout Doors (B)
	No Floor SF
	Walkout Doors (A)

(10) Floor Support

Joists:
Unsupported Len:
Cntr.Sup:

(11) Heating/Cooling

X	Gas		Oil		Elec.
	Wood		Coal		Steam

	Forced Air w/o Ducts
X	Forced Air w/ Ducts
	Forced Hot Water
	Electric Baseboard
	Elec. Ceil. Radiant
	Radiant (in-floor)
	Electric Wall Heat
	Space Heater
	Wall/Floor Furnace
	Forced Heat & Cool
	Heat Pump
	No Heating/Cooling

	Central Air
	Wood Furnace

(12) Electric

0	Amps Service

No./Qual. of Fixtures

	Ex.	X	Ord.		Min

No. of Elec. Outlets

	Many	X	Ave.		Few

(13) Plumbing

1	Average Fixture(s)
	3 Fixture Bath
	2 Fixture Bath
	Softener, Auto
	Softener, Manual
	Solar Water Heat
	No Plumbing
	Extra Toilet
	Extra Sink
	Separate Shower
	Ceramic Tile Floor
	Ceramic Tile Wains
	Ceramic Tub Alcove
	Vent Fan

(14) Water/Sewer

	Public Water
	Public Sewer
1	Water Well
1	1000 Gal Septic
	2000 Gal Septic

Lump Sum Items:

(15) Built-ins

	Appliance Allow.
	Cook Top
	Dishwasher
	Garbage Disposal
	Bath Heater
	Vent Fan
	Hot Tub
	Unvented Hood
	Vented Hood
	Intercom
	Jacuzzi Tub
	Jacuzzi repl.Tub
	Oven
	Microwave
	Standard Range
	Self Clean Range
	Sauna
	Trash Compactor
	Central Vacuum
	Security System

(15) Fireplaces

	Interior 1 Story
	Interior 2 Story
	2nd/Same Stack
	Two Sided
	Exterior 1 Story
	Exterior 2 Story
	Prefab 1 Story
	Prefab 2 Story
	Heat Circulator
	Raised Hearth
	Wood Stove
	Direct-Vented Gas

Class: CD
Effec. Age: 20
Floor Area: 792
Total Base New : 140,256 E.C.F.
Total Depr Cost: 112,205 X 1.297
Estimated T.C.V: 145,530

(16) Porches/Decks

Area	Type
160	Treated Wood

(17) Garage

Year Built:
Car Capacity:
Class: CD
Exterior: Siding
Brick Ven.: 0
Stone Ven.: 0
Common Wall: Detache
Foundation: 18 Inch
Finished ?:
Auto. Doors: 0
Mech. Doors: 0
Area: 360
% Good: 0
Storage Area: 0
No Conc. Floor: 0

Bsmnt Garage:

Carport Area:
Roof:

Cost Est. for Res. Bldg: 1 Single Family PLAIN Cls CD Blt 2009
(11) Heating System: Forced Air w/ Ducts
Ground Area = 792 SF Floor Area = 792 SF.
Phy/Ab.Phy/Func/Econ/Comb. % Good=80/100/100/100/80
Building Areas

Stories	Exterior	Foundation	Size	Cost New	Depr. Cost
1 Story	Siding	Basement	792		
			Total:	111,981	89,585
Other Additions/Adjustments					
Water/Sewer					
1000 Gal Septic			1	4,582	3,666
Water Well, 100 Feet			1	5,680	4,544
Deck					
Treated Wood			160	3,523	2,818
Garages					
Class: CD Exterior: Siding Foundation: 18 Inch (Unfinished)					
Base Cost			360	14,490	11,592
			Totals:	140,256	112,205

Notes:
ECF (RESIDENTIAL) 1.297 => TCV: 145,530

*** Information herein deemed reliable but not guaranteed***

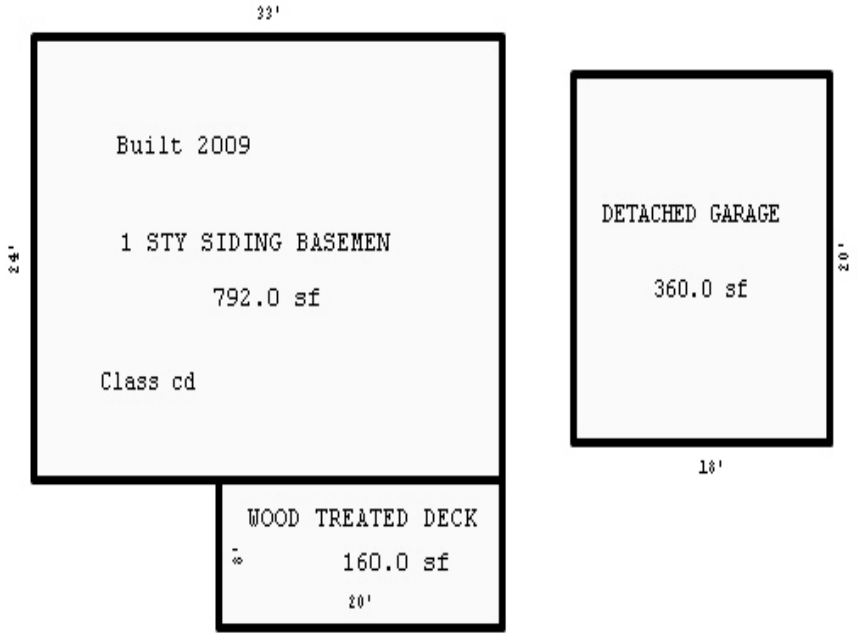

Sketch by Apex Medina™

*** Information herein deemed reliable but not guaranteed***

Parcel Number: 2410-23-1404 Jurisdiction: GREENWOOD TWP County: WEXFORD Printed on 02/15/2024

Grantor	Grantee	Sale Price	Sale Date	Inst. Type	Terms of Sale	Liber & Page	Verified By	Prcnt. Trans.
DEYOUNG, SANDRA KAY	DUNNEBACK, RAYMOND & REBEC	7,000	06/21/2013	QC	03-ARM'S LENGTH	660/1921	DEED	100.0
MUNCH, CATHERINE S.	MUNCH ET AL, LEONARD	5,000	07/11/1991	WD	03-ARM'S LENGTH	326:927	DEED	0.0

Property Address

8723 N 35 RD

Owner's Name/Address

DUNNEBACK, RAYMOND & REBECCA
5019 BAUMHOFF
COMSTOCK PARK MI 49321

Tax Description

PAR COM AT NE COR OF S 1/2 OF NE 1/4: S 11 1/2 RDS; W 12 1/2 RDS; N 11 1/2 RDS; E 12 1/2 RDS TO POB. --.9 A M/L-- GW. SEC. 23 T24N R10W -MANTON-

Comments/Influences

Class: RESIDENTIAL-IMPROV Zoning:

School: MANTON CONSOLIDATED SCHOOLS

P.R.E. 0%

:

2024 Est TCV 35,632 TCV/TFA: 77.46

Building Permit(s)	Date	Number	Status

X	Improved		Vacant

	Public Improvements
	Dirt Road
X	Gravel Road
	Paved Road
	Storm Sewer
	Sidewalk
	Water
	Sewer
X	Electric
	Gas
	Curb
	Street Lights
	Standard Utilities
	Underground Utils.

	Topography of Site
X	Level
	Rolling
	Low
	High
	Landscaped
	Swamp
	Wooded
	Pond
	Waterfront
	Ravine
	Wetland
	Flood Plain
X	PINES

Who	When	What
GLA	05/30/2017	INSPECTION

Land Value Estimates for Land Table 4010.LAND VALUES

Description	Frontage	Depth	* Factors * Front	Depth	Rate	%Adj.	Reason	Value
ACREAGE			0.760 Acres		10,953	100		8,324
ROW			0.140 Acres		0	100		0
			0.90 Total Acres		Total Est. Land Value =			8,324

Land Improvement Cost Estimates

Description	Rate	Size	% Good	Cash Value
D/W/P: 4in Concrete	7.01	244	10	171
D/W/P: 4in Concrete	7.01	184	10	129
D/W/P: 4in Concrete	7.01	27	10	19
Metal Prefab/Conc.	25.65	96	10	246
Wood Frame	36.03	60	44	951
Total Estimated Land Improvements True Cash Value =				1,516

Year	Land Value	Building Value	Assessed Value	Board of Review	Tribunal/ Other	Taxable Value
2024	4,200	13,600	17,800			9,208C
2023	2,300	11,100	13,400			8,770C
2022	1,900	9,400	11,300			8,353C
2021	2,300	8,100	10,400			8,087C

The Equalizer. Copyright (c) 1999 - 2009. Licensed To: Township of Greenwood, County of Wexford, Michigan

*** Information herein deemed reliable but not guaranteed***

Building Type

	Single Family
X	Mobile Home
	Town Home
	Duplex
	A-Frame

X	Wood Frame

Building Style: SWT/DWT

Yr Built	Remodeled
0	0

Condition: Good

Room List

	Basement
	1st Floor
	2nd Floor
	Bedrooms

(1) Exterior

	Wood/Shingle
	Aluminum/Vinyl
X	Brick
X	Insulation

(2) Windows

	Many		Large
X	Avg.	X	Avg.
	Few		Small

	Wood Sash
	Metal Sash
X	Vinyl Sash
	Double Hung
	Horiz. Slide
	Casement
	Double Glass
	Patio Doors
X	Storms & Screens

(3) Roof

X	Gable		Gambrel
	Hip		Mansard
	Flat		Shed

X	Asphalt Shingle

Chimney:

(3) Roof (cont.)

	Eavestrough
X	Insulation
0	Front Overhang
0	Other Overhang

(4) Interior

X	Drywall		Plaster
	Paneled		Wood T&G

Trim & Decoration

	Ex	X	Ord		Min

Size of Closets

	Lg	X	Ord		Small

Doors:		Solid	X	H.C.	

(5) Floors

Kitchen:
Other: Linoleum
Other: Carpeted

(6) Ceilings

X	Drywall		

(7) Excavation

Basement: 0 S.F.
Crawl: 0 S.F.
Slab: 0 S.F.
Height to Joists: 0.0

(8) Basement

	Conc. Block
	Poured Conc.
	Stone
	Treated Wood
	Concrete Floor

(9) Basement Finish

	Recreation SF
	Living SF
	Walkout Doors (B)
	No Floor SF
	Walkout Doors (A)

(10) Floor Support

Joists:
Unsupported Len:
Cntr.Sup:

(11) Heating/Cooling

X	Gas		Oil		Elec.
	Wood		Coal		Steam

X	Forced Warm Air
	Wall Furnace
	Warm & Cool Air
	Heat Pump
	Central Air
	Wood Furnace

(12) Electric

150	Amps Service

No./Qual. of Fixtures

	Ex.	X	Ord.		Min

No. of Elec. Outlets

	Many	X	Ave.		Few

(13) Plumbing

1	Average Fixture(s)
	3 Fixture Bath
	2 Fixture Bath
	Softener, Auto
	Softener, Manual
	Solar Water Heat
	No Plumbing
	Extra Toilet
	Extra Sink
	Separate Shower
	Ceramic Tile Floor
	Ceramic Tile Wains
	Ceramic Tub Alcove
	Vent Fan

(14) Water/Sewer

	Public Water
	Public Sewer
1	Water Well
1	1000 Gal Septic
	2000 Gal Septic

Lump Sum Items:
1

(15) Built-ins

	Appliance Allow.
	Cook Top
	Dishwasher
	Garbage Disposal
	Bath Heater
	Vent Fan
	Hot Tub
	Unvented Hood
	Vented Hood
	Intercom
	Jacuzzi Tub
	Jacuzzi repl.Tub
	Oven
	Microwave
	Standard Range
	Self Clean Range
	Sauna
	Trash Compactor
	Central Vacuum
	Security System

(15) Fireplaces

	Interior 1 Story
	Interior 2 Story
	2nd/Same Stack
	Two Sided
	Exterior 1 Story
	Exterior 2 Story
	Prefab 1 Story
	Prefab 2 Story
	Heat Circulator
	Raised Hearth
	Wood Stove
	Direct-Vented Gas

Class: Fair
Effec. Age: 25
Floor Area:
Total Base New : 56,816 E.C.F.
Total Depr Cost: 19,886 X 1.297
Estimated T.C.V: 25,792

(16) Porches/Decks

Area	Type
160	WGEP (1 Story)

(17) Garage

Year Built:
Car Capacity:
Class:
Exterior:
Brick Ven.:
Stone Ven.:
Common Wall:
Foundation:
Finished ?:
Auto. Doors:
Mech. Doors:
Area:
% Good:
Storage Area:
No Conc. Floor:

Bsmnt Garage:

Carport Area:
Roof:

Cost Est. for Res. Bldg: 1 Mobile Home SWT/DWT Cls Fair Blt 0
(11) Heating System: Forced Warm Air
Ground Area = 460 SF Floor Area = 460 SF.
Phy/Ab.Phy/Func/Econ/Comb. % Good=35/100/100/100/35
Building Areas

Type	Ext. Walls	Roof/Fnd.	Size	Cost New	Depr. Cost
Main Home	Ribbed	Metal	460		
			Total:	32,346	11,321
Other Additions/Adjustments					
Skirting, Metal or Vinyl, Vertical			112	1,249	437
Water/Sewer					
1000 Gal Septic			1	4,582	1,604
Water Well, 100 Feet			1	5,680	1,988
Porches					
WGEP (1 Story)			160	9,459	3,311
Lump Sum Items					
PLD TRAVEL TRL				3,500	1,225
			Totals:	56,816	19,886

Notes:
ECF (RESIDENTIAL) 1.297 => TCV: 25,792

*** Information herein deemed reliable but not guaranteed***

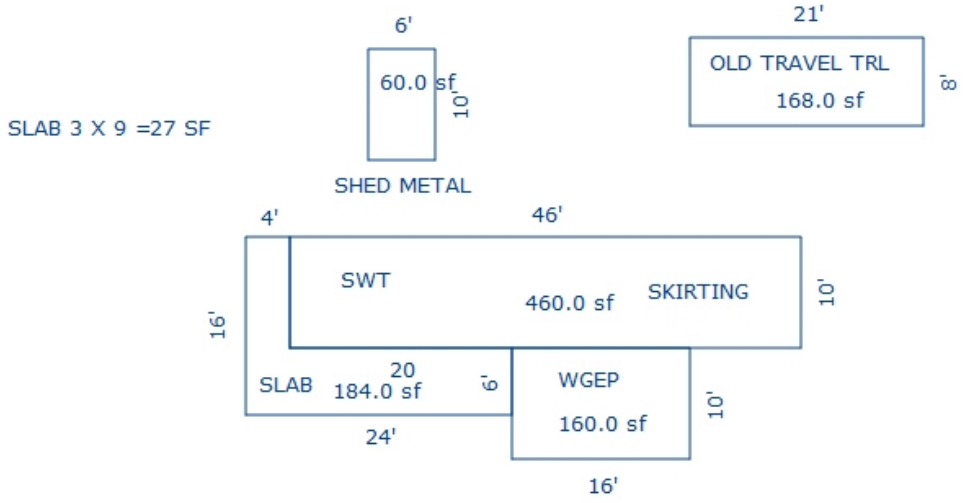

Sketch by Apex Sketch

*** Information herein deemed reliable but not guaranteed***

Parcel Number: 2410-23-1405 Jurisdiction: GREENWOOD TWP County: WEXFORD Printed on 02/15/2024

Grantor	Grantee	Sale Price	Sale Date	Inst. Type	Terms of Sale	Liber & Page	Verified By	Prcnt. Trans.
LEHMANN, A.R.	BRETTSCHNEIDER, MATTHEW &	74,362	07/29/2016	WD	03-ARM'S LENGTH	678/443	DEED	100.0
LEHMANN, DAVID A.	LEHMANN, A.R.	2,500	11/24/1992	QC	09-FAMILY	333:9	DEED	0.0

Property Address

8681 N 35 RD

Owner's Name/Address

BRETTSCHNEIDER, MATTHEW & KRYSTINA
8681 N 35RD
MANTON MI 49663

Tax Description

PAR COM 13 1/2 RDS S OF NE COR OF S 1/2 OF NE 1/4: S 11 1/2 RDS; W 25 RDS; N 11 1/2 RDS; E TO BEG. --1.797 A M/L-- GW. SEC. 23 T24N R10W -MANTON-

Comments/Influences

Class: RESIDENTIAL-IMPROV Zoning:

School: MANTON CONSOLIDATED SCHOOLS

P.R.E. 100% 08/17/2016

:

2024 Est TCV 157,883 TCV/TFA: 137.05

Building Permit(s)	Date	Number	Status
Res. Add/Alter/Repair	06/29/2022	PB22-0151	ENTERED

X	Improved		Vacant

	Public Improvements
	Dirt Road
X	Gravel Road
	Paved Road
	Storm Sewer
	Sidewalk
	Water
	Sewer
X	Electric
	Gas
	Curb
	Street Lights
	Standard Utilities
	Underground Utils.

	Topography of Site
X	Level
	Rolling
	Low
	High
	Landscaped
	Swamp
	Wooded
	Pond
	Waterfront
	Ravine
	Wetland
	Flood Plain
X	PINES

Who	When	What
DB	10/23/2023	INSPECTION
GLA	05/30/2017	INSPECTION

Land Value Estimates for Land Table 4010.LAND VALUES

Description	Frontage	Depth	* Factors * Front	Depth	Rate	%Adj.	Reason	Value
	190.00	417.00	1.0000	0.0000	0	100*		0
ACREAGE			1.657 Acres		8,904	100		14,754
ROW			0.140 Acres		0	100		0

* denotes lines that do not contribute to the total acreage calculation.

190 Actual Front Feet, 1.80 Total Acres Total Est. Land Value = 14,754

Land Improvement Cost Estimates

Description	Rate	Size	% Good	Cash Value
D/W/P: 4in Concrete	6.11	608	45	1,672
Total Estimated Land Improvements True Cash Value =				1,672

Year	Land Value	Building Value	Assessed Value	Board of Review	Tribunal/ Other	Taxable Value
2024	7,400	71,500	78,900			54,108C
2023	4,800	41,700	46,500			34,770C
2022	4,000	35,300	39,300			33,115C
2021	4,600	35,800	40,400			32,058C

The Equalizer. Copyright (c) 1999 - 2009.
Licensed To: Township of Greenwood, County of Wexford, Michigan

*** Information herein deemed reliable but not guaranteed***

Building Type

X	Single Family
	Mobile Home
	Town Home
	Duplex
	A-Frame
X	Wood Frame

Building Style: PLAIN

Yr Built	Remodeled
0	1990

Condition: Good

Room List

	Basement
	1st Floor
	2nd Floor
	Bedrooms

(1) Exterior

	Wood/Shingle
X	Aluminum/Vinyl
	Brick
X	Insulation

(2) Windows

X	Many Avg. Few	X	Large Avg. Small

	Wood Sash
	Metal Sash
X	Vinyl Sash
	Double Hung
	Horiz. Slide
	Casement
	Double Glass
	Patio Doors
X	Storms & Screens

(3) Roof

X	Gable Hip Flat		Gambrel Mansard Shed
X	Asphalt Shingle		

Chimney:

(3) Roof (cont.)

	Eavestrough
X	Insulation
0	Front Overhang
0	Other Overhang

(4) Interior

X	Drywall Paneled		Plaster Wood T&G

Trim & Decoration

	Ex	X	Ord		Min

Size of Closets

	Lg	X	Ord		Small

Doors: | | Solid | X | H.C.

(5) Floors

Kitchen:
Other: Linoleum
Other: Carpeted

(6) Ceilings

X	Drywall		

(7) Excavation

Basement: 1152 S.F.
Crawl: 0 S.F.
Slab: 0 S.F.
Height to Joists: 0.0

(8) Basement

	Conc. Block
	Poured Conc.
	Stone
	Treated Wood
	Concrete Floor

(9) Basement Finish

	Recreation SF
	Living SF
	Walkout Doors (B)
	No Floor SF
	Walkout Doors (A)

(10) Floor Support

Joists:
Unsupported Len:
Cntr.Sup:

(11) Heating/Cooling

X	Gas Wood		Oil Coal		Elec. Steam

	Forced Air w/o Ducts
X	Forced Air w/ Ducts
	Forced Hot Water
	Electric Baseboard
	Elec. Ceil. Radiant
	Radiant (in-floor)
	Electric Wall Heat
	Space Heater
	Wall/Floor Furnace
	Forced Heat & Cool
	Heat Pump
	No Heating/Cooling

	Central Air
	Wood Furnace

(12) Electric

150	Amps Service

No./Qual. of Fixtures

	Ex.	X	Ord.		Min

No. of Elec. Outlets

	Many	X	Ave.		Few

(13) Plumbing

	Average Fixture(s)
1	3 Fixture Bath
	2 Fixture Bath
	Softener, Auto
	Softener, Manual
	Solar Water Heat
	No Plumbing
	Extra Toilet
	Extra Sink
	Separate Shower
	Ceramic Tile Floor
	Ceramic Tile Wains
	Ceramic Tub Alcove
	Vent Fan

(14) Water/Sewer

	Public Water
	Public Sewer
1	Water Well
1	1000 Gal Septic
	2000 Gal Septic

Lump Sum Items:

(15) Built-ins

	Appliance Allow.
	Cook Top
	Dishwasher
	Garbage Disposal
	Bath Heater
	Vent Fan
	Hot Tub
	Unvented Hood
	Vented Hood
	Intercom
	Jacuzzi Tub
	Jacuzzi repl.Tub
	Oven
	Microwave
	Standard Range
	Self Clean Range
	Sauna
	Trash Compactor
	Central Vacuum
	Security System

(15) Fireplaces

	Interior 1 Story
	Interior 2 Story
	2nd/Same Stack
	Two Sided
	Exterior 1 Story
	Exterior 2 Story
	Prefab 1 Story
	Prefab 2 Story
	Heat Circulator
	Raised Hearth
	Wood Stove
	Direct-Vented Gas

Class: D
Effec. Age: 40
Floor Area: 1,152
Total Base New : 183,386 E.C.F.
Total Depr Cost: 109,065 X 1.297
Estimated T.C.V: 141,457

(16) Porches/Decks

Area	Type
128	WPP
96	Treated Wood

(17) Garage

Year Built:
Car Capacity:
Class: D
Exterior: Pole
Brick Ven.: 0
Stone Ven.: 0
Common Wall: Detache
Foundation: 18 Inch
Finished ?:
Auto. Doors: 0
Mech. Doors: 0
Area: 1008
% Good: 0
Storage Area: 0
No Conc. Floor: 0

Bsmnt Garage:

Carport Area:
Roof:

Cost Est. for Res. Bldg: 1 Single Family PLAIN Cls D Blt 0
(11) Heating System: Forced Air w/ Ducts
Ground Area = 1152 SF Floor Area = 1152 SF.
Phy/Ab.Phy/Func/Econ/Comb. % Good=60/100/100/100/60
Building Areas

Stories	Exterior	Foundation	Size	Cost New	Depr. Cost	
1 Story	Siding	Basement	864			
1 Story	Siding	Basement	288			
			Total:	138,583	83,149	
Other Additions/Adjustments						
Water/Sewer						
1000 Gal Septic			1	4,293	2,576	
Water Well, 100 Feet			1	5,545	3,327	
Porches						
WPP			128	2,784	1,670	
Deck						
Treated Wood			96	2,401	1,441	
Garages						
Class: D Exterior: Pole (Unfinished)						
Base Cost			1008	20,120	12,072	
Class: D Exterior: Pole (Unfinished)						
Base Cost			576	12,891	6,445	*5
No Concrete Floor			576	-3,231	-1,616	
			Totals:	183,386	109,065	

Notes:

ECF (RESIDENTIAL) 1.297 => TCV: 141,457

*** Information herein deemed reliable but not guaranteed***

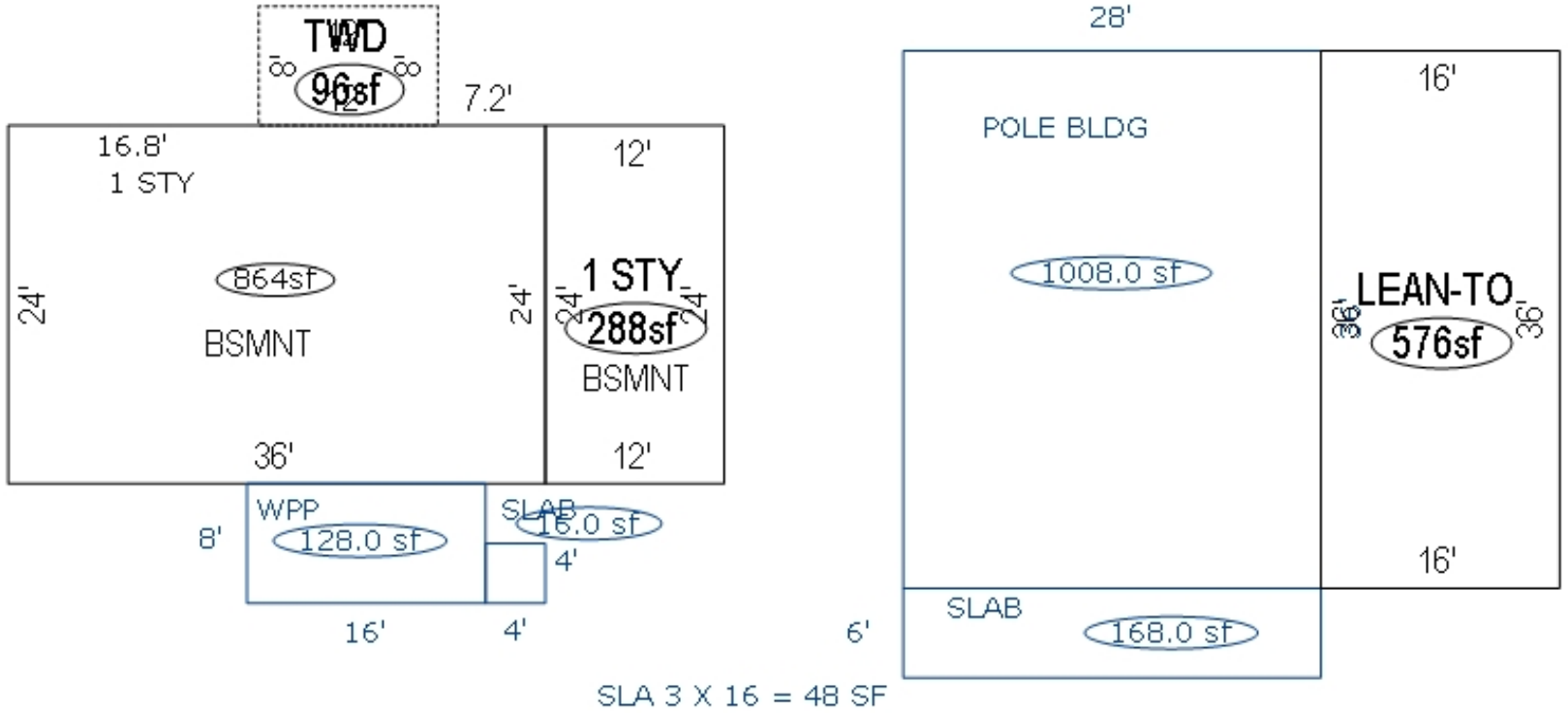

*** Information herein deemed reliable but not guaranteed***

Parcel Number: 2410-23-1406 Jurisdiction: GREENWOOD TWP County: WEXFORD Printed on 02/15/2024

Grantor	Grantee	Sale Price	Sale Date	Inst. Type	Terms of Sale	Liber & Page	Verified By	Prcnt. Trans.
SCOTT, SANDRA L & STEPHEN	SCOTT, SANDRA L & REBECCA	0	09/10/2006	QC	09-FAMILY	596/78	DEED	0.0
CURTIS, MARK W.	SCOTT, STEPHEN & SANDRA	4,000	03/22/2000	QC	09-FAMILY	372:726	DEED	0.0

Property Address

Owner's Name/Address

SCOTT, SANDRA L
& REBECCA ANN SCOTT
5130 E 10 RD
MANTON MI 49663

Tax Description

PAR COM 13 1/2 RDS S & 25 RDS W OF NE COR OF S 1/2 OF NE 1/4: S 11 1/2 RDS; W 25 RDS; N 11 1/2 RDS; E TO BEG. --1.797 A M/L-- GW. SEC. 23 T24N R10W -MANTON-

Comments/Influences

Class: RESIDENTIAL-VACANT Zoning:

School: MANTON CONSOLIDATED SCHOOLS

P.R.E. 0%

:

2024 Est TCV 13,259

Building Permit(s)	Date	Number	Status

	Improved	X	Vacant

	Public Improvements
X	Dirt Road
	Gravel Road
	Paved Road
	Storm Sewer
	Sidewalk
	Water
	Sewer
X	Electric
	Gas
	Curb
	Street Lights
	Standard Utilities
	Underground Utils.

	Topography of Site
	Level
	Rolling
	Low
	High
	Landscaped
	Swamp
X	Wooded
	Pond
	Waterfront
	Ravine
	Wetland
	Flood Plain
X	PINES

Who	When	What
GLA	05/30/2017	INSPECTION

Land Value Estimates for Land Table 4010.LAND VALUES

Description	Frontage	Depth	* Factors * Front	Depth	Rate	%Adj.	Reason	Value
ACREAGE			1.797 Acres		7,379	100		13,259
			1.80 Total Acres		Total Est. Land Value =			13,259

Year	Land Value	Building Value	Assessed Value	Board of Review	Tribunal/ Other	Taxable Value
2024	6,600	0	6,600			3,237C
2023	5,100	0	5,100			3,083C
2022	4,200	0	4,200			2,937C
2021	4,700	0	4,700			2,844C

The Equalizer. Copyright (c) 1999 - 2009. Licensed To: Township of Greenwood, County of Wexford, Michigan

*** Information herein deemed reliable but not guaranteed***

Parcel Number: 2410-23-1407 Jurisdiction: GREENWOOD TWP County: WEXFORD Printed on 02/15/2024

Grantor	Grantee	Sale Price	Sale Date	Inst. Type	Terms of Sale	Liber & Page	Verified By	Prcnt. Trans.
TIKKANEN, DAVID C	DEVRIES RICHARD AND CHERYI	138,000	10/16/2023	WD	03-ARM'S LENGTH	696/892	DEED	100.0
DEVRIES RICHARD AND CHERYL	CR CHALET LLC	0	10/16/2023	QC	21-NOT USED/OTHER	696/894	DEED	100.0

Property Address

8651 N 35 RD

Owner's Name/Address

CR CHALET LLC
556 FENNESSEY ST SW
GRAND RAPIDS MI 49544

Tax Description

PAR COM 25 RDS S OF NE COR OF S 1/2 OF NE 1/4: S 10 RDS; W 16 RDS; N 10 RDS; E 16 RDS TO POB. --1 A M/L-- GW. SEC. 23 T24N R10W -MANTON-

Comments/Influences

The Equalizer. Copyright (c) 1999 - 2009. Licensed To: Township of Greenwood, County of Wexford, Michigan

Class: RESIDENTIAL-IMPROV Zoning:

School: MANTON CONSOLIDATED SCHOOLS

P.R.E. 0%

:

2024 Est TCV 114,788 TCV/TFA: 136.65

Building Permit(s)	Date	Number	Status

X	Improved		Vacant

	Public Improvements
	Dirt Road
X	Gravel Road
	Paved Road
	Storm Sewer
	Sidewalk
	Water
	Sewer
X	Electric
	Gas
	Curb
	Street Lights
	Standard Utilities
	Underground Utils.

	Topography of Site
X	Level
X	Rolling
	Low
	High
	Landscaped
	Swamp
	Wooded
	Pond
	Waterfront
	Ravine
	Wetland
	Flood Plain
X	PINES

Who	When	What
GLA	05/30/2017	INSPECTION

Land Value Estimates for Land Table 4010.LAND VALUES

Description	Frontage	Depth	* Factors * Front	Depth	Rate	%Adj.	Reason	Value
ACREAGE			0.875 Acres		10,953	100		9,584
ROW			0.125 Acres		0	100		0
			1.00 Total Acres		Total Est. Land Value =			9,584

Land Improvement Cost Estimates

Description	Rate	Size	% Good	Cash Value
Wood Frame	29.74	96	72	2,056
Total Estimated Land Improvements True Cash Value =				2,056

Year	Land Value	Building Value	Assessed Value	Board of Review	Tribunal/ Other	Taxable Value
2024	4,800	52,600	57,400			57,400S
2023	2,600	43,100	45,700			36,939C
2022	2,200	36,400	38,600			35,180C
2021	2,600	36,800	39,400			34,057C

*** Information herein deemed reliable but not guaranteed***

Building Type

X	Single Family
	Mobile Home
	Town Home
	Duplex
	A-Frame
X	Wood Frame

Building Style: PLAIN

Yr Built	Remodeled
0	0

Condition: Good

Room List

	Basement
	1st Floor
	2nd Floor
	Bedrooms

(1) Exterior

	Wood/Shingle
X	Aluminum/Vinyl
	Brick
X	Insulation

(2) Windows

	Many		Large
X	Avg.	X	Avg.
	Few		Small

	Wood Sash
	Metal Sash
X	Vinyl Sash
	Double Hung
	Horiz. Slide
	Casement
	Double Glass
	Patio Doors
X	Storms & Screens

(3) Roof

X	Gable		Gambrel
	Hip		Mansard
	Flat		Shed

X	Asphalt Shingle

Chimney:

(3) Roof (cont.)

	Eavestrough
X	Insulation
0	Front Overhang
0	Other Overhang

(4) Interior

X	Drywall		Plaster
	Paneled		Wood T&G

Trim & Decoration

	Ex	X	Ord		Min

Size of Closets

	Lg	X	Ord		Small

Doors:		Solid	X	H.C.	

(5) Floors

Kitchen:
Other: Linoleum
Other: Carpeted

(6) Ceilings

X	Drywall

(7) Excavation

Basement: 0 S.F.
Crawl: 672 S.F.
Slab: 0 S.F.
Height to Joists: 0.0

(8) Basement

	Conc. Block
	Poured Conc.
	Stone
	Treated Wood
	Concrete Floor

(9) Basement Finish

	Recreation SF
	Living SF
	Walkout Doors (B)
	No Floor SF
	Walkout Doors (A)

(10) Floor Support

Joists:
Unsupported Len:
Cntr.Sup:

(11) Heating/Cooling

X	Gas		Oil		Elec.
	Wood		Coal		Steam

	Forced Air w/o Ducts
X	Forced Air w/ Ducts
	Forced Hot Water
	Electric Baseboard
	Elec. Ceil. Radiant
	Radiant (in-floor)
	Electric Wall Heat
	Space Heater
	Wall/Floor Furnace
	Forced Heat & Cool
	Heat Pump
	No Heating/Cooling

	Central Air
	Wood Furnace

(12) Electric

150	Amps Service

No./Qual. of Fixtures

	Ex.	X	Ord.		Min

No. of Elec. Outlets

	Many	X	Ave.		Few

(13) Plumbing

	Average Fixture(s)
1	3 Fixture Bath
	2 Fixture Bath
	Softener, Auto
	Softener, Manual
	Solar Water Heat
	No Plumbing
	Extra Toilet
	Extra Sink
	Separate Shower
	Ceramic Tile Floor
	Ceramic Tile Wains
	Ceramic Tub Alcove
	Vent Fan

(14) Water/Sewer

	Public Water
	Public Sewer
1	Water Well
1	1000 Gal Septic
	2000 Gal Septic

Lump Sum Items:

(15) Built-ins

	Appliance Allow.
	Cook Top
	Dishwasher
	Garbage Disposal
	Bath Heater
	Vent Fan
	Hot Tub
	Unvented Hood
	Vented Hood
	Intercom
	Jacuzzi Tub
	Jacuzzi repl.Tub
	Oven
	Microwave
	Standard Range
	Self Clean Range
	Sauna
	Trash Compactor
	Central Vacuum
	Security System

(15) Fireplaces

	Interior 1 Story
	Interior 2 Story
	2nd/Same Stack
	Two Sided
	Exterior 1 Story
	Exterior 2 Story
	Prefab 1 Story
	Prefab 2 Story
	Heat Circulator
	Raised Hearth
	Wood Stove
	Direct-Vented Gas

Class: CD
Effec. Age: 29
Floor Area: 840
Total Base New : 112,012 E.C.F.
Total Depr Cost: 79,528 X 1.297
Estimated T.C.V: 103,148

(16) Porches/Decks

Area	Type
80	CCP (1 Story)
9	CPP
80	Treated Wood

(17) Garage

Year Built:
Car Capacity:
Class:
Exterior:
Brick Ven.:
Stone Ven.:
Common Wall:
Foundation:
Finished ?:
Auto. Doors:
Mech. Doors:
Area:
% Good:
Storage Area:
No Conc. Floor:

Bsmnt Garage:

Carport Area:
Roof:

Cost Est. for Res. Bldg: 1 Single Family PLAIN Cls CD Blt 0
(11) Heating System: Forced Air w/ Ducts
Ground Area = 672 SF Floor Area = 840 SF.
Phy/Ab.Phy/Func/Econ/Comb. % Good=71/100/100/100/71
Building Areas

Stories	Exterior	Foundation	Size	Cost New	Depr. Cost
1.25 Story	Siding	Crawl Space	672		
			Total:	97,152	68,977
Other Additions/Adjustments					
Water/Sewer					
1000 Gal Septic			1	4,582	3,253
Water Well, 100 Feet			1	5,680	4,033
Porches					
CCP (1 Story)			80	2,130	1,512
CPP			9	239	170
Deck					
Treated Wood			80	2,229	1,583
			Totals:	112,012	79,528

Notes:
ECF (RESIDENTIAL) 1.297 => TCV: 103,148

*** Information herein deemed reliable but not guaranteed***

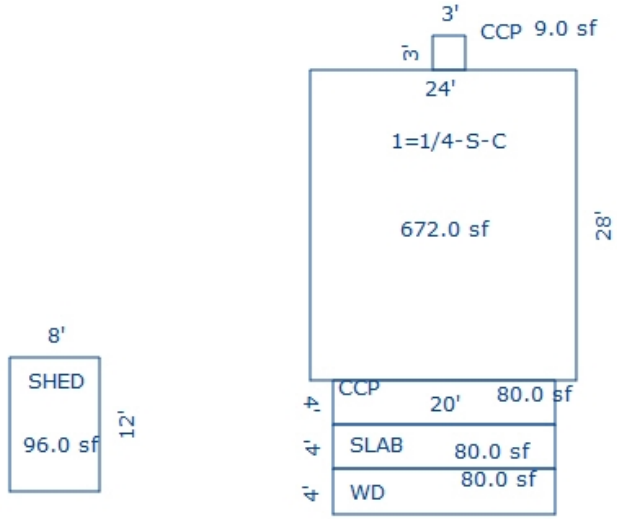

Sketch by Apex Sketch

*** Information herein deemed reliable but not guaranteed***

Parcel Number: 2410-23-1408 Jurisdiction: GREENWOOD TWP County: WEXFORD Printed on 02/15/2024

Grantor	Grantee	Sale Price	Sale Date	Inst. Type	Terms of Sale	Liber & Page	Verified By	Prcnt. Trans.
BEIMERS, BRIAN	SEMKIW, WILLIAM & MELISSA	0	09/25/2018	QC	21-NOT USED/OTHER	683 / 1616	DEED	100.0
BEIMERS, BRIAN G & LINDA J	BEIMERS, BRIAN	1	07/09/2015	QC	21-NOT USED/OTHER	675/2081	DEED	0.0

Property Address

8621 N 35 RD

Owner's Name/Address

SEMKIW, WILLIAM & MELISSA
18400 148TH AVE
SPRING LAKE MI 49456

Tax Description

PAR COM 35 RDS S OF NE COR OF S 1/2 OF NE 1/4; S 10 RDS; W 16 RDS; N 10 RDS; TH E 16 RDS TO POB. --1 A M/L-- GW. SEC. 23 T24N R10W -MANTON-

Comments/Influences

Class: RESIDENTIAL-IMPROV Zoning:

School: MANTON CONSOLIDATED SCHOOLS

P.R.E. 0%

:

2024 Est TCV 48,360 TCV/TFA: 52.34

Building Permit(s)	Date	Number	Status
MOBILE HOME	09/11/2002	PE14767	
RESIDENTIAL - REMODEL	03/27/2000	PB9535	

X	Improved		Vacant

	Public Improvements
X	Dirt Road
	Gravel Road
	Paved Road
	Storm Sewer
	Sidewalk
	Water
	Sewer
X	Electric
	Gas
	Curb
	Street Lights
	Standard Utilities
	Underground Utils.

	Topography of Site
	Level
X	Rolling
	Low
	High
	Landscaped
	Swamp
	Wooded
	Pond
	Waterfront
	Ravine
	Wetland
	Flood Plain
X	PINES

Who	When	What
GLA	05/30/2017	INSPECTION

Land Value Estimates for Land Table 4010.LAND VALUES

Description	Frontage	Depth	* Factors * Front	Depth	Rate	%Adj.	Reason	Value
ACREAGE			0.880 Acres		10,953	100		9,639
ROW			0.120 Acres		0	100		0
			1.00 Total Acres		Total Est. Land Value =			9,639

Year	Land Value	Building Value	Assessed Value	Board of Review	Tribunal/ Other	Taxable Value
2024	4,800	19,400	24,200			12,943C
2023	2,600	15,600	18,200			12,327C
2022	2,200	13,000	15,200			11,740C
2021	2,600	11,100	13,700			11,365C

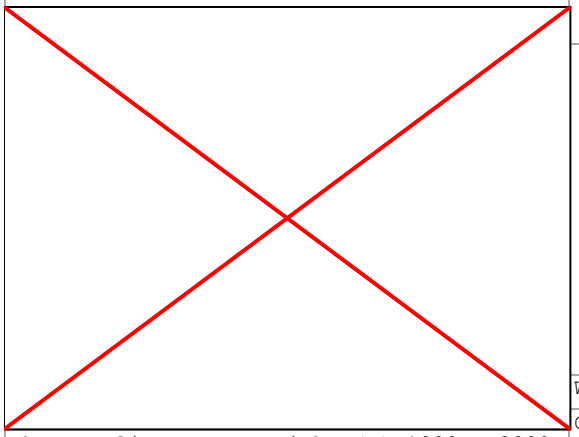

The Equalizer. Copyright (c) 1999 - 2009.
Licensed To: Township of Greenwood, County of Wexford, Michigan

*** Information herein deemed reliable but not guaranteed***

Building Type

	Single Family
X	Mobile Home
	Town Home
	Duplex
	A-Frame

X	Wood Frame

Building Style: SWT/DWT

Yr Built	Remodeled
1989	0

Condition: Good

Room List

	Basement
	1st Floor
	2nd Floor
	Bedrooms

(1) Exterior

	Wood/Shingle
X	Aluminum/Vinyl
	Brick
X	Insulation

(2) Windows

	Many		Large
X	Avg.	X	Avg.
	Few		Small

	Wood Sash
	Metal Sash
X	Vinyl Sash
	Double Hung
	Horiz. Slide
	Casement
	Double Glass
	Patio Doors
X	Storms & Screens

(3) Roof

X	Gable		Gambrel
	Hip		Mansard
	Flat		Shed

X	Asphalt Shingle

Chimney:

(3) Roof (cont.)

	Eavestrough
X	Insulation
0	Front Overhang
0	Other Overhang

(4) Interior

X	Drywall		Plaster
	Paneled		Wood T&G

Trim & Decoration

	Ex	X	Ord		Min

Size of Closets

	Lg	X	Ord		Small

Doors:		Solid	X	H.C.

(5) Floors

Kitchen:
Other: Linoleum
Other: Carpeted

(6) Ceilings

X	Drywall		

(7) Excavation

Basement: 0 S.F.
Crawl: 0 S.F.
Slab: 0 S.F.
Height to Joists: 0.0

(8) Basement

	Conc. Block
	Poured Conc.
	Stone
	Treated Wood
	Concrete Floor

(9) Basement Finish

	Recreation SF
	Living SF
	Walkout Doors (B)
	No Floor SF
	Walkout Doors (A)

(10) Floor Support

Joists:
Unsupported Len:
Cntr.Sup:

(11) Heating/Cooling

X	Gas		Oil		Elec.
	Wood		Coal		Steam

X	Forced Warm Air
	Wall Furnace
	Warm & Cool Air
	Heat Pump

	Central Air
	Wood Furnace

(12) Electric

150	Amps Service

No./Qual. of Fixtures

	Ex.	X	Ord.		Min

No. of Elec. Outlets

	Many	X	Ave.		Few

(13) Plumbing

	Average Fixture(s)
1	3 Fixture Bath
	2 Fixture Bath
	Softener, Auto
	Softener, Manual
	Solar Water Heat
	No Plumbing
	Extra Toilet
	Extra Sink
	Separate Shower
	Ceramic Tile Floor
	Ceramic Tile Wains
	Ceramic Tub Alcove
	Vent Fan

(14) Water/Sewer

	Public Water
	Public Sewer
1	Water Well
1	1000 Gal Septic
	2000 Gal Septic

Lump Sum Items:

(15) Built-ins

	Appliance Allow.
	Cook Top
	Dishwasher
	Garbage Disposal
	Bath Heater
	Vent Fan
	Hot Tub
	Unvented Hood
	Vented Hood
	Intercom
	Jacuzzi Tub
	Jacuzzi repl.Tub
	Oven
	Microwave
	Standard Range
	Self Clean Range
	Sauna
	Trash Compactor
	Central Vacuum
	Security System

(15) Fireplaces

	Interior 1 Story
	Interior 2 Story
	2nd/Same Stack
	Two Sided
	Exterior 1 Story
	Exterior 2 Story
	Prefab 1 Story
	Prefab 2 Story
	Heat Circulator
	Raised Hearth
	Wood Stove
	Direct-Vented Gas

Class: Average
Effec. Age: 30
Floor Area:
Total Base New : 85,295 E.C.F.
Total Depr Cost: 29,854 X 1.297
Estimated T.C.V: 38,721

(16) Porches/Decks

Area	Type
25	WPP
9	CCP (1 Story)
104	CPP
40	CPP

(17) Garage

Year Built:
Car Capacity:
Class: C
Exterior: Siding
Brick Ven.: 0
Stone Ven.: 0
Common Wall: Detache
Foundation: 18 Inch
Finished ?:
Auto. Doors: 0
Mech. Doors: 0
Area: 312
% Good: 0
Storage Area: 0
No Conc. Floor: 0

Bsmnt Garage:

Carport Area:
Roof:

Cost Est. for Res. Bldg: 1 Mobile Home SWT/DWT Cls Average Blt 1989
(11) Heating System: Wall Furnace
Ground Area = 924 SF Floor Area = 924 SF.
Phy/Ab.Phy/Func/Econ/Comb. % Good=35/100/100/100/35
Building Areas

Type	Ext. Walls	Roof/Fnd.	Size	Cost New	Depr. Cost
Main Home	Ribbed	Metal	924		
			Total:	54,156	18,956
Other Additions/Adjustments					
Skirting, Metal or Vinyl, Vertical			160	1,830	640
Water/Sewer					
1000 Gal Septic			1	4,899	1,715
Water Well, 100 Feet			1	5,849	2,047
Porches					
WPP			25	1,386	485
CPP			104	1,258	440
CPP			40	591	207
CCP (1 Story)			9	456	160
Garages					
Class: C Exterior: Siding Foundation: 18 Inch (Unfinished)					
Base Cost			312	14,870	5,204
			Totals:	85,295	29,854

Notes:

ECF (RESIDENTIAL) 1.297 => TCV: 38,721

*** Information herein deemed reliable but not guaranteed***

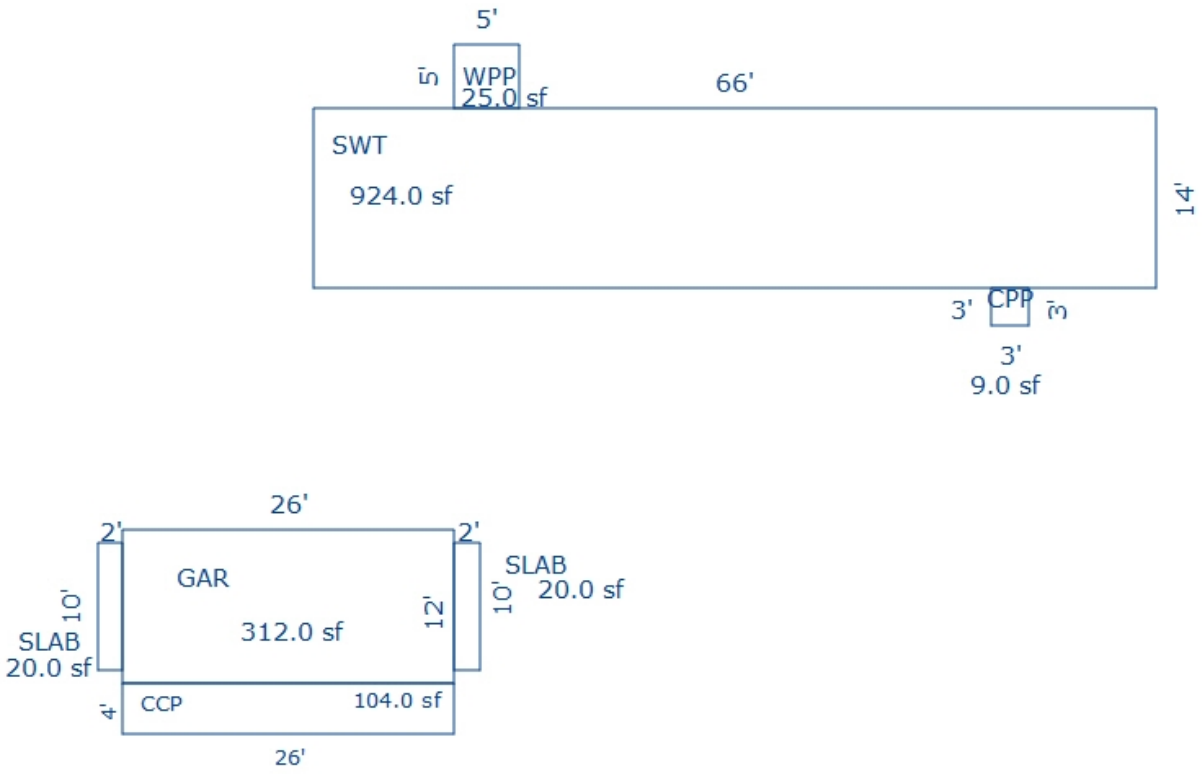

Sketch by Apex Sketch

*** Information herein deemed reliable but not guaranteed***

Parcel Number: 2410-23-1409 Jurisdiction: GREENWOOD TWP County: WEXFORD Printed on 02/15/2024

Grantor	Grantee	Sale Price	Sale Date	Inst. Type	Terms of Sale	Liber & Page	Verified By	Prcnt. Trans.
ROSE, ALLEN H.	ROSE, ALLEN H & LYNN A LE	100	08/09/2018	QC	18-LIFE ESTATE	683 / 721	DEED	0.0

Property Address

8593 N 35 RD

Owner's Name/Address

ROSE, ALLEN H & LYNN A LE
14745 144TH AVE
SPRING LAKE MI 49456

Tax Description

PAR COM 45 RDS S OF NE COR OF S 1/2 OF NE 1/4: S 10 RDS; W 16 RDS; N 10 RDS; E 16 RDS TO POB. --1 A M/L-- GW. SEC. 23 T24N R10W -MANTON-

Comments/Influences

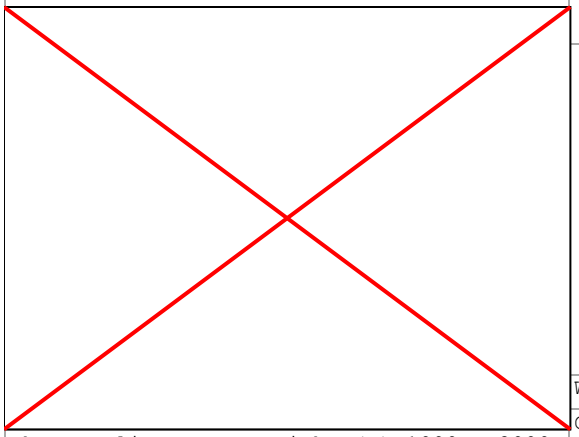

The Equalizer. Copyright (c) 1999 - 2009. Licensed To: Township of Greenwood, County of Wexford, Michigan

Class: RESIDENTIAL-IMPROV Zoning:
School: MANTON CONSOLIDATED SCHOOLS
P.R.E. 0%
:
2024 Est TCV 49,625 TCV/TFA: 53.71

Building Permit(s)	Date	Number	Status
MOBILE HOME	07/28/2006	PE17588	
MOBILE HOME	07/28/2006	PP4272	
MOBILE HOME	07/20/2006	PB13251	

X	Improved		Vacant

	Public Improvements
	Dirt Road
X	Gravel Road
	Paved Road
	Storm Sewer
	Sidewalk
	Water
	Sewer
X	Electric
	Gas
	Curb
	Street Lights
	Standard Utilities
	Underground Utils.

	Topography of Site
X	Level
X	Rolling
	Low
	High
	Landscaped
	Swamp
	Wooded
	Pond
	Waterfront
	Ravine
	Wetland
	Flood Plain
X	PINES

Who	When	What
GLA	05/30/2017	INSPECTION

Land Value Estimates for Land Table 4010.LAND VALUES

Description	Frontage	Depth	* Factors * Front	Depth	Rate	%Adj.	Reason	Value
ACREAGE			0.880 Acres		10,953	100		9,639
ROW			0.120 Acres		0	100		0
			1.00 Total Acres		Total Est. Land Value =			9,639

Land Improvement Cost Estimates

Description	Rate	Size	% Good	Cash Value
D/W/P: 4in Concrete	7.01	124	45	391
Wood Frame	29.74	96	44	1,256
Total Estimated Land Improvements True Cash Value =				1,647

Year	Land Value	Building Value	Assessed Value	Board of Review	Tribunal/ Other	Taxable Value
2024	4,800	20,000	24,800			13,648C
2023	2,600	16,300	18,900			12,999C
2022	2,200	13,600	15,800			12,380C
2021	2,600	11,700	14,300			11,985C

*** Information herein deemed reliable but not guaranteed***

Building Type

	Single Family
X	Mobile Home
	Town Home
	Duplex
	A-Frame

X	Wood Frame

Building Style: SWT/DWT

Yr Built	Remodeled
0	0

Condition: Good

Room List

	Basement
	1st Floor
	2nd Floor
	Bedrooms

(1) Exterior

	Wood/Shingle
X	Aluminum/Vinyl
	Brick
X	Insulation

(2) Windows

	Many		Large
X	Avg.	X	Avg.
	Few		Small

	Wood Sash
	Metal Sash
X	Vinyl Sash
	Double Hung
	Horiz. Slide
	Casement
	Double Glass
	Patio Doors
X	Storms & Screens

(3) Roof

X	Gable		Gambrel
	Hip		Mansard
	Flat		Shed

X	Asphalt Shingle

Chimney:

(3) Roof (cont.)

	Eavestrough
X	Insulation
0	Front Overhang
0	Other Overhang

(4) Interior

X	Drywall		Plaster
	Paneled		Wood T&G

Trim & Decoration

	Ex	X	Ord		Min

Size of Closets

	Lg	X	Ord		Small

Doors:		Solid	X	H.C.	

(5) Floors

Kitchen:
Other: Linoleum
Other: Carpeted

(6) Ceilings

X	Drywall		

(7) Excavation

Basement: 0 S.F.
Crawl: 0 S.F.
Slab: 0 S.F.
Height to Joists: 0.0

(8) Basement

	Conc. Block
	Poured Conc.
	Stone
	Treated Wood
	Concrete Floor

(9) Basement Finish

	Recreation SF
	Living SF
	Walkout Doors (B)
	No Floor SF
	Walkout Doors (A)

(10) Floor Support

Joists:
Unsupported Len:
Cntr.Sup:

(11) Heating/Cooling

X	Gas		Oil		Elec.
	Wood		Coal		Steam

X	Forced Warm Air
	Wall Furnace
	Warm & Cool Air
	Heat Pump

	Central Air
	Wood Furnace

(12) Electric

150	Amps Service

No./Qual. of Fixtures

	Ex.	X	Ord.		Min

No. of Elec. Outlets

	Many	X	Ave.		Few

(13) Plumbing

	Average Fixture(s)
1	3 Fixture Bath
	2 Fixture Bath
	Softener, Auto
	Softener, Manual
	Solar Water Heat
	No Plumbing
	Extra Toilet
	Extra Sink
	Separate Shower
	Ceramic Tile Floor
	Ceramic Tile Wains
	Ceramic Tub Alcove
	Vent Fan

(14) Water/Sewer

	Public Water
	Public Sewer
1	Water Well
1	1000 Gal Septic
	2000 Gal Septic

Lump Sum Items:

(15) Built-ins

	Appliance Allow.
	Cook Top
	Dishwasher
	Garbage Disposal
	Bath Heater
	Vent Fan
	Hot Tub
	Unvented Hood
	Vented Hood
	Intercom
	Jacuzzi Tub
	Jacuzzi repl.Tub
	Oven
	Microwave
	Standard Range
	Self Clean Range
	Sauna
	Trash Compactor
	Central Vacuum
	Security System

(15) Fireplaces

	Interior 1 Story
	Interior 2 Story
	2nd/Same Stack
	Two Sided
	Exterior 1 Story
	Exterior 2 Story
	Prefab 1 Story
	Prefab 2 Story
	Heat Circulator
	Raised Hearth
	Wood Stove
	Direct-Vented Gas

Class: Fair
Effec. Age: 25
Floor Area:
Total Base New : 84,456 E.C.F.
Total Depr Cost: 29,560 X 1.297
Estimated T.C.V: 38,339

(16) Porches/Decks

Area	Type
120	WPP

(17) Garage

Year Built:
Car Capacity:
Class: CD
Exterior: Pole
Brick Ven.: 0
Stone Ven.: 0
Common Wall: Detache
Foundation: 18 Inch
Finished ?:
Auto. Doors: 0
Mech. Doors: 0
Area: 960
% Good: 0
Storage Area: 0
No Conc. Floor: 0

Bsmnt Garage:

Carport Area:
Roof:

Cost Est. for Res. Bldg: 1 Mobile Home SWT/DWT Cls Fair Blt 0
(11) Heating System: Wall Furnace
Ground Area = 924 SF Floor Area = 924 SF.
Phy/Ab.Phy/Func/Econ/Comb. % Good=35/100/100/100/35
Building Areas

Type	Ext. Walls	Roof/Fnd.	Size	Cost New	Depr. Cost
Main Home	Ribbed	Metal	924		
			Total:	47,507	16,628
Other Additions/Adjustments					
Skirting, Metal or Vinyl, Vertical			160	1,784	624
Water/Sewer					
1000 Gal Septic			1	4,582	1,604
Water Well, 100 Feet			1	5,680	1,988
Porches					
WPP			120	2,996	1,049
Garages					
Class: CD Exterior: Pole (Unfinished)					
Base Cost			960	21,907	7,667
			Totals:	84,456	29,560

Notes:
ECF (RESIDENTIAL) 1.297 => TCV: 38,339

*** Information herein deemed reliable but not guaranteed***

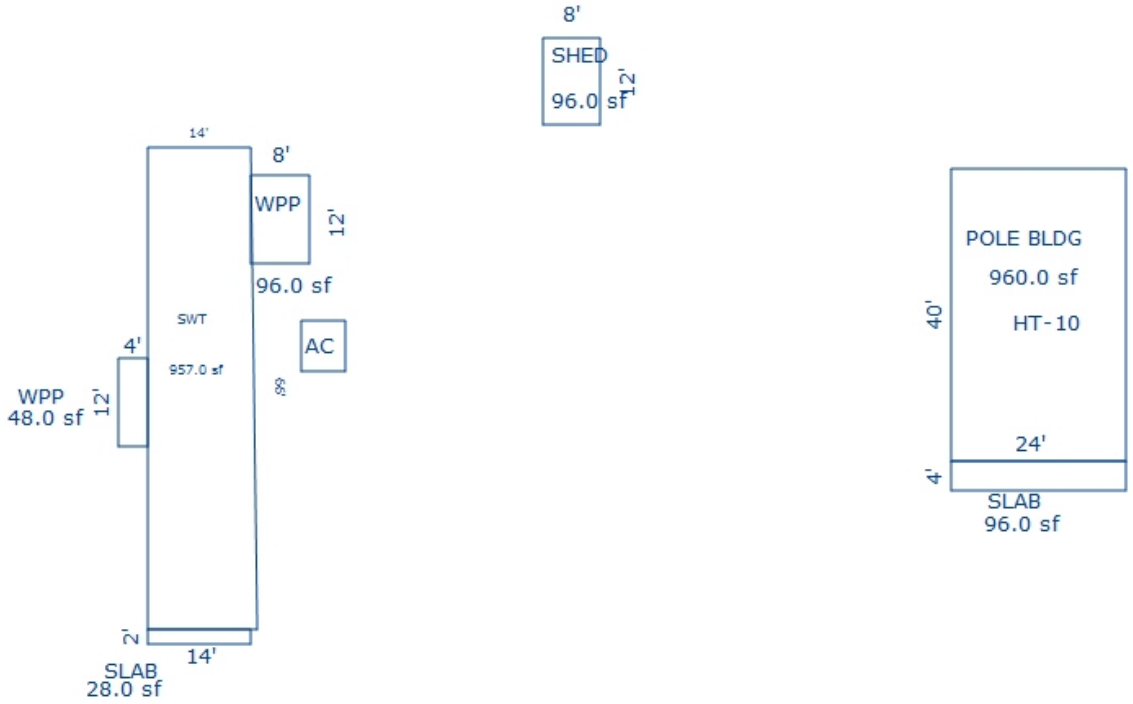

Sketch by Apex Sketch

*** Information herein deemed reliable but not guaranteed***

Parcel Number: 2410-23-1410 Jurisdiction: GREENWOOD TWP County: WEXFORD Printed on 02/15/2024

Grantor	Grantee	Sale Price	Sale Date	Inst. Type	Terms of Sale	Liber & Page	Verified By	Prcnt. Trans.

Property Address	Class: RESIDENTIAL-IMPROV	Zoning:	Building Permit(s)	Date	Number	Status
8513 N 35 RD	School: MANTON CONSOLIDATED SCHOOLS		RESIDENTIAL - REMODEL	07/06/2000	PB9779	
	P.R.E. 100% 11/13/2012					
Owner's Name/Address	:					
TIKKANEN, STEVE & CINDY 12311 W BRADY RD CHESANING MI 48616	2024 Est TCV 106,701 TCV/TFA: 130.76					

X Improved | Vacant

Land Value Estimates for Land Table 4010.LAND VALUES

Description	Frontage	Depth	* Factors * Front	Depth	Rate	%Adj.	Reason	Value
ACREAGE			0.880 Acres		10,953	100		9,639
ROW			0.120 Acres		0	100		0
			1.00 Total Acres		Total Est. Land Value =			9,639

Land Improvement Cost Estimates

Description	Rate	Size	% Good	Cash Value
D/W/P: 4in Concrete	6.11	224	45	616
Wood Frame	19.95	192	55	2,106
Total Estimated Land Improvements True Cash Value =				2,722

Public Improvements

- X Gravel Road
- X Electric
- X OPEN

Topography of Site

- Level
- Rolling
- Low
- High
- Landscaped
- Swamp
- Wooded
- Pond
- Waterfront
- Ravine
- Wetland
- Flood Plain

Tax Description

THE E 18 RDS OF THE S 10 RDS OF S 1/2 OF NE 1/4 -- 1A M/L-- GW. SEC. 23 T24N R10W -MANTON-

Comments/Influences

Who	When	What
GLA	05/30/2017	INSPECTION

Year	Land Value	Building Value	Assessed Value	Board of Review	Tribunal/ Other	Taxable Value
2024	4,800	48,600	53,400			15,416C
2023	2,600	40,000	42,600			14,682C
2022	2,200	34,000	36,200			13,983C
2021	2,600	34,500	37,100			13,537C

The Equalizer. Copyright (c) 1999 - 2009. Licensed To: Township of Greenwood, County of Wexford, Michigan

*** Information herein deemed reliable but not guaranteed***

Building Type

X	Single Family
	Mobile Home
	Town Home
	Duplex
	A-Frame
X	Wood Frame

Building Style: PLAIN

Yr Built	Remodeled
0	0

Condition: Good

Room List

	Basement
	1st Floor
	2nd Floor
	Bedrooms

(1) Exterior

	Wood/Shingle
X	Aluminum/Vinyl
	Brick
X	Insulation

(2) Windows

	Many		Large
X	Avg.	X	Avg.
	Few		Small

	Wood Sash
	Metal Sash
X	Vinyl Sash
	Double Hung
	Horiz. Slide
	Casement
	Double Glass
	Patio Doors
X	Storms & Screens

(3) Roof

X	Gable		Gambrel
	Hip		Mansard
	Flat		Shed
X	Asphalt Shingle		

Chimney:

(3) Roof (cont.)

	Eavestrough
X	Insulation
0	Front Overhang
0	Other Overhang

(4) Interior

X	Drywall		Plaster
	Paneled		Wood T&G

Trim & Decoration

	Ex	X	Ord		Min

Size of Closets

	Lg	X	Ord		Small

Doors:		Solid	X	H.C.	

(5) Floors

Kitchen:
Other: Linoleum
Other: Carpeted

(6) Ceilings

X	Drywall

(7) Excavation

Basement: 0 S.F.
Crawl: 0 S.F.
Slab: 816 S.F.
Height to Joists: 0.0

(8) Basement

	Conc. Block
	Poured Conc.
	Stone
	Treated Wood
	Concrete Floor

(9) Basement Finish

	Recreation SF
	Living SF
	Walkout Doors (B)
	No Floor SF
	Walkout Doors (A)

(10) Floor Support

Joists:
Unsupported Len:
Cntr.Sup:

(11) Heating/Cooling

X	Gas		Oil		Elec.
	Wood		Coal		Steam

	Forced Air w/o Ducts
X	Forced Air w/ Ducts
	Forced Hot Water
	Electric Baseboard
	Elec. Ceil. Radiant
	Radiant (in-floor)
	Electric Wall Heat
	Space Heater
	Wall/Floor Furnace
	Forced Heat & Cool
	Heat Pump
	No Heating/Cooling

	Central Air
	Wood Furnace

(12) Electric

150	Amps Service

No./Qual. of Fixtures

	Ex.	X	Ord.		Min

No. of Elec. Outlets

	Many	X	Ave.		Few

(13) Plumbing

	Average Fixture(s)
1	3 Fixture Bath
	2 Fixture Bath
	Softener, Auto
	Softener, Manual
	Solar Water Heat
	No Plumbing
	Extra Toilet
	Extra Sink
	Separate Shower
	Ceramic Tile Floor
	Ceramic Tile Wains
	Ceramic Tub Alcove
	Vent Fan

(14) Water/Sewer

	Public Water
	Public Sewer
1	Water Well
1	1000 Gal Septic
	2000 Gal Septic

Lump Sum Items:

(15) Built-ins

	Appliance Allow.
	Cook Top
	Dishwasher
	Garbage Disposal
	Bath Heater
	Vent Fan
	Hot Tub
	Unvented Hood
	Vented Hood
	Intercom
	Jacuzzi Tub
	Jacuzzi repl.Tub
	Oven
	Microwave
	Standard Range
	Self Clean Range
	Sauna
	Trash Compactor
	Central Vacuum
	Security System

(15) Fireplaces

	Interior 1 Story
	Interior 2 Story
	2nd/Same Stack
	Two Sided
	Exterior 1 Story
	Exterior 2 Story
	Prefab 1 Story
	Prefab 2 Story
	Heat Circulator
	Raised Hearth
	Wood Stove
	Direct-Vented Gas

Class: D
Effec. Age: 45
Floor Area: 816
Total Base New : 132,909 E.C.F.
Total Depr Cost: 72,737 X 1.297
Estimated T.C.V: 94,340

(16) Porches/Decks

Area	Type
212	CPP

(17) Garage

Year Built:
Car Capacity:
Class: D
Exterior: Pole
Brick Ven.: 0
Stone Ven.: 0
Common Wall: Detache
Foundation: 18 Inch
Finished ?:
Auto. Doors: 0
Mech. Doors: 0
Area: 960
% Good: 0
Storage Area: 0
No Conc. Floor: 0

Bsmnt Garage:

Carport Area:
Roof:

Cost Est. for Res. Bldg: 1 Single Family PLAIN Cls D Blt 0
(11) Heating System: Forced Air w/ Ducts
Ground Area = 816 SF Floor Area = 816 SF.
Phy/Ab.Phy/Func/Econ/Comb. % Good=55/100/100/100/55
Building Areas

Stories	Exterior	Foundation	Size	Cost New	Depr. Cost	
1 Story	Siding	Slab	816			
			Total:	90,058	49,532	
Other Additions/Adjustments						
Water/Sewer						
1000 Gal Septic			1	4,293	2,361	
Water Well, 100 Feet			1	5,545	3,050	
Porches						
CPP			212	3,051	1,678	
Garages						
Class: D Exterior: Pole (Unfinished)						
Base Cost			960	19,334	10,634	
Class: D Exterior: Siding Foundation: 42 Inch (Unfinished)						
Base Cost			192	8,751	4,813	
Local Cost Items						
POLE LEAN TO			96	504	277	
SHED			96	749	330	*4
SHED #2			80	624	62	*1
			Totals:	132,909	72,737	

Notes:

ECF (RESIDENTIAL) 1.297 => TCV: 94,340

*** Information herein deemed reliable but not guaranteed***

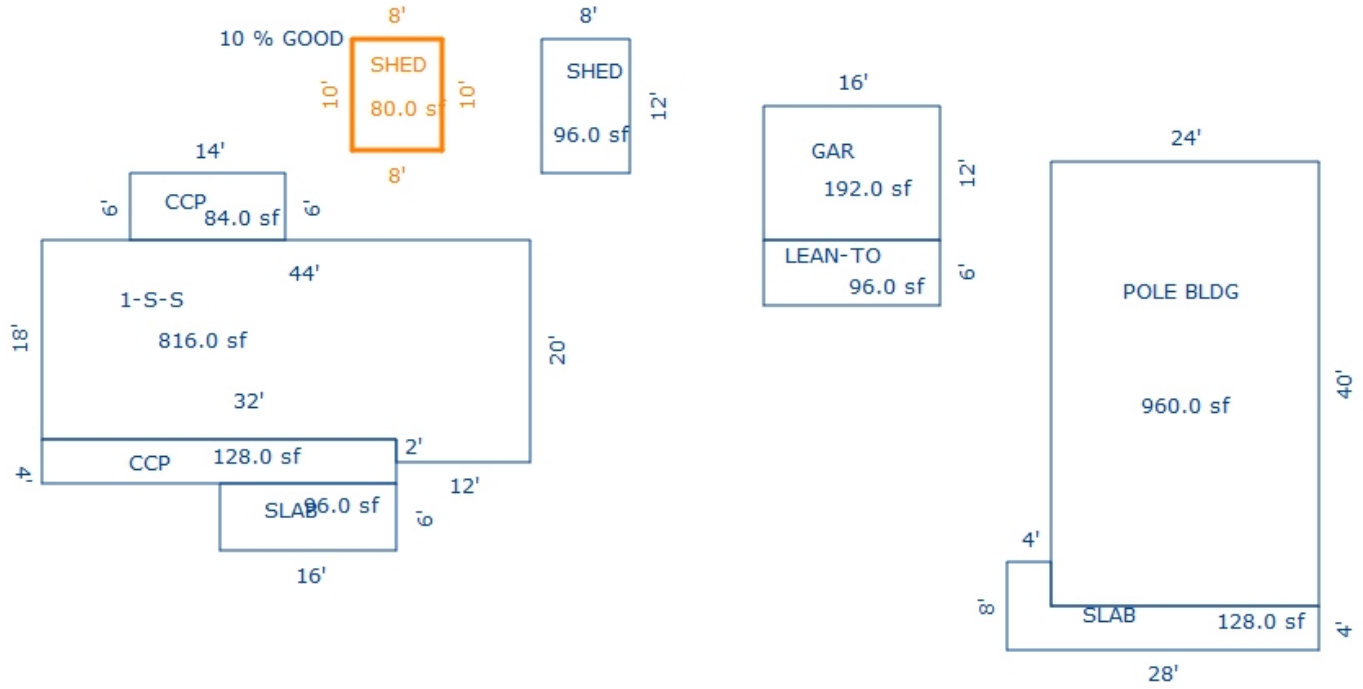

Sketch by Apex Sketch

*** Information herein deemed reliable but not guaranteed***

Parcel Number: 2410-23-2101 Jurisdiction: GREENWOOD TWP County: WEXFORD Printed on 02/15/2024

Grantor	Grantee	Sale Price	Sale Date	Inst. Type	Terms of Sale	Liber & Page	Verified By	Prcnt. Trans.
GELVEN, ROBERT	GELVEN, ROBERT W & STACEY	0	03/29/2021	QC	03-ARM'S LENGTH		AGENT	0.0
WESTON, TROY	GELVEN, ROBERT	215,000	07/14/2020	WD	03-ARM'S LENGTH	688/518	AGENT	100.0
MITCHELL, MELISSA E.	WESTON, TROY	48,938	10/21/1995	WD	03-ARM'S LENGTH	346:742	DEED	0.0
LAMERAND, RONALD D.	MITCHELL, MELISSA E.	40,000	12/22/1993	LC	03-ARM'S LENGTH	337:716	DEED	0.0

Property Address

4364 E 8 RD

Owner's Name/Address

GELVEN, ROBERT W & STACEY A
17174 ORCHARD RIDGE RD
NORTHVIEW MI 48168

Tax Description

E 1/2 OF NW 1/4 80 A. GW. SEC. 23 T24N R10W -MANTON-

Comments/Influences

Class: RESIDENTIAL-IMPROV Zoning:

School: MANTON CONSOLIDATED SCHOOLS

P.R.E. 0%

:

2024 Est TCV 343,116 TCV/TFA: 291.77

Building Permit(s)	Date	Number	Status
Pole Barn	08/28/2008	PB08-0206	

X Improved | Vacant

	Public Improvements
	Dirt Road
X	Gravel Road
	Paved Road
	Storm Sewer
	Sidewalk
	Water
	Sewer
X	Electric
	Gas
	Curb
	Street Lights
	Standard Utilities
	Underground Utils.

	Topography of Site
X	Level
X	Rolling
	Low
	High
	Landscaped
	Swamp
	Wooded
	Pond
	Waterfront
	Ravine
	Wetland
	Flood Plain
X	PINES/OPEN

Who	When	What
GLA	05/30/2017	INSPECTION

Land Value Estimates for Land Table 4010.LAND VALUES

Description	Frontage	Depth	* Factors * Front	Depth	Rate	%Adj.	Reason	Value
ACREAGE			79.010 Acres		2,544	100		201,024
ROW			0.990 Acres		0	100		0
			80.00 Total Acres		Total Est. Land Value =			201,024

Land Improvement Cost Estimates

Description	Rate	Size	% Good	Cash Value
Wood Frame	24.42	240	44	2,579
Total Estimated Land Improvements True Cash Value =				2,579

Year	Land Value	Building Value	Assessed Value	Board of Review	Tribunal/ Other	Taxable Value
2024	100,500	71,100	171,600			126,642C
2023	85,100	57,400	142,500			120,612C
2022	67,200	48,900	116,100			114,869C
2021	61,400	49,800	111,200			111,200S

The Equalizer. Copyright (c) 1999 - 2009. Licensed To: Township of Greenwood, County of Wexford, Michigan

*** Information herein deemed reliable but not guaranteed***

Building Type

X	Single Family
	Mobile Home
	Town Home
	Duplex
	A-Frame
X	Wood Frame

Building Style: PLAIN

Yr Built	Remodeled
0	1978

Condition: Good

Room List

	Basement
	1st Floor
	2nd Floor
	Bedrooms

(1) Exterior

X	Wood/Shingle
	Aluminum/Vinyl
	Brick
X	Insulation

(2) Windows

	Many		Large
X	Avg.	X	Avg.
	Few		Small

X	Wood Sash
	Metal Sash
	Vinyl Sash
	Double Hung
	Horiz. Slide
	Casement
	Double Glass
	Patio Doors
X	Storms & Screens

(3) Roof

X	Gable		Gambrel
	Hip		Mansard
	Flat		Shed

X	Asphalt Shingle

Chimney:

(3) Roof (cont.)

	Eavestrough
X	Insulation
0	Front Overhang
0	Other Overhang

(4) Interior

X	Drywall		Plaster
	Paneled		Wood T&G

Trim & Decoration

	Ex	X	Ord		Min

Size of Closets

	Lg	X	Ord		Small

Doors:		Solid	X	H.C.	

(5) Floors

Kitchen:
Other: Linoleum
Other: Carpeted

(6) Ceilings

X	Drywall

(7) Excavation

Basement: 0 S.F.
Crawl: 1176 S.F.
Slab: 0 S.F.
Height to Joists: 0.0

(8) Basement

	Conc. Block
	Poured Conc.
	Stone
	Treated Wood
	Concrete Floor

(9) Basement Finish

	Recreation SF
	Living SF
	Walkout Doors (B)
	No Floor SF
	Walkout Doors (A)

(10) Floor Support

Joists:
Unsupported Len:
Cntr.Sup:

(11) Heating/Cooling

X	Gas		Oil		Elec.
	Wood		Coal		Steam

	Forced Air w/o Ducts
X	Forced Air w/ Ducts
	Forced Hot Water
	Electric Baseboard
	Elec. Ceil. Radiant
	Radiant (in-floor)
	Electric Wall Heat
	Space Heater
	Wall/Floor Furnace
	Forced Heat & Cool
	Heat Pump
	No Heating/Cooling

	Central Air
	Wood Furnace

(12) Electric

150	Amps Service

No./Qual. of Fixtures

	Ex.	X	Ord.		Min

No. of Elec. Outlets

	Many	X	Ave.		Few

(13) Plumbing

1	Average Fixture(s)
	3 Fixture Bath
	2 Fixture Bath
	Softener, Auto
	Softener, Manual
	Solar Water Heat
	No Plumbing
	Extra Toilet
	Extra Sink
	Separate Shower
	Ceramic Tile Floor
	Ceramic Tile Wains
	Ceramic Tub Alcove
	Vent Fan

(14) Water/Sewer

	Public Water
	Public Sewer
1	Water Well
	1000 Gal Septic
	2000 Gal Septic

Lump Sum Items:

(15) Built-ins

	Appliance Allow.
	Cook Top
	Dishwasher
	Garbage Disposal
	Bath Heater
	Vent Fan
	Hot Tub
	Unvented Hood
	Vented Hood
	Intercom
	Jacuzzi Tub
	Jacuzzi repl.Tub
	Oven
	Microwave
	Standard Range
	Self Clean Range
	Sauna
	Trash Compactor
	Central Vacuum
	Security System

(15) Fireplaces

	Interior 1 Story
	Interior 2 Story
	2nd/Same Stack
	Two Sided
	Exterior 1 Story
	Exterior 2 Story
	Prefab 1 Story
	Prefab 2 Story
	Heat Circulator
	Raised Hearth
	Wood Stove
	Direct-Vented Gas

Class: CD
Effec. Age: 56
Floor Area: 1,176
Total Base New : 239,036 E.C.F.
Total Depr Cost: 107,566 X 1.297
Estimated T.C.V: 139,513

(16) Porches/Decks

Area	Type
720	CSEP (1 Story)

(17) Garage

Year Built:
Car Capacity:
Class: CD
Exterior: Sid/Br
Brick Ven.: 0
Stone Ven.: 0
Common Wall: Detache
Foundation: 42 Inch
Finished ?:
Auto. Doors: 0
Mech. Doors: 0
Area: 2160
% Good: 0
Storage Area: 0
No Conc. Floor: 0

Bsmnt Garage:

Carport Area:
Roof:

Cost Est. for Res. Bldg: 1 Single Family PLAIN Cls CD Blt 0
(11) Heating System: Forced Air w/ Ducts
Ground Area = 1176 SF Floor Area = 1176 SF.
Phy/Ab.Phy/Func/Econ/Comb. % Good=45/100/100/100/45
Building Areas

Stories	Exterior	Foundation	Size	Cost New	Depr. Cost
1 Story	Siding	Crawl Space	1,176		
			Total:	136,674	61,503
Other Additions/Adjustments					
Water/Sewer					
Water Well, 100 Feet			1	5,680	2,556
Porches					
CSEP (1 Story)			720	27,022	12,160
Garages					
Class: CD Exterior: Sid/Br Foundation: 42 Inch (Unfinished)					
Base Cost			2160	69,660	31,347
			Totals:	239,036	107,566

Notes:
ECF (RESIDENTIAL) 1.297 => TCV: 139,513

*** Information herein deemed reliable but not guaranteed***

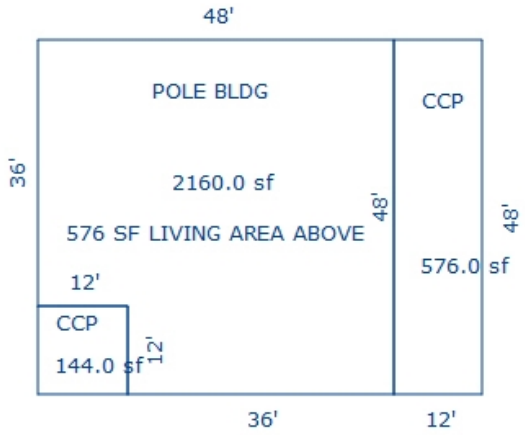

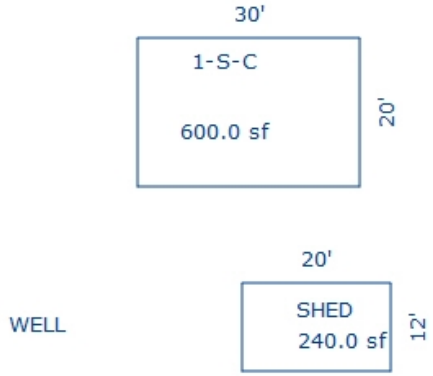

Sketch by Apex Sketch

*** Information herein deemed reliable but not guaranteed***

Parcel Number: 2410-23-2201-02 Jurisdiction: GREENWOOD TWP County: WEXFORD Printed on 02/15/2024

Grantor	Grantee	Sale Price	Sale Date	Inst. Type	Terms of Sale	Liber & Page	Verified By	Prcnt. Trans.
WESTBROOK, BRENT V & BRIAN	WESTBROOK BRIAN J	0	08/08/2023	QC	21-NOT USED/OTHER	695/2781	PROPERTY TRANSFER	0.0

Property Address

N 33 RD

Owner's Name/Address

WESTBROOK BRIAN J
P.O BOX 1612
TRAVERSE CITY MI 49685

Tax Description

W 1/2 OF NW 1/4 EXC W 433 FT OF S 350 FT; & EXC COM AT NW COR OF SW 1/4 OF NW 1/4 AS POB: S 450 FT; E TO CENTER OF SILVER CREEK: NW'LY ALONG CREEK TO A PT 225 FT S OF N 1/8-LINE; N TO 1/8- LINE; W TO BEG. & EXC COM 1947 FT S OF NW COR OF NW 1/4 AS POB; S 200 FT; E TO CENTER OF SILVER CK; NW'LY 200 FT M/L; W TO BEG; INTENDING TO CONVEY A STRIP 150 FT WIDE N & S 71.407 A M/L-- GW. SEC. 23 T24N R10W
-MANTON-
SPLIT/COMBINED ON 10/26/2018 FROM 2410-23-2201, 2410-23-2303.
Split/Combined on 12/12/2022 from 2410-23-2201-01;

Comments/Influences

Split/Comb. on 12/12/2022 completed 12/12/2022 LINDA ;
Parent Parcel(s): 2410-23-2201-01;
Child Parcel(s): 2410-23-2201-02, 2410-23-2201-03;

The Equalizer. Copyright (c) 1999 - 2009. Licensed To: Township of Greenwood, County of Wexford, Michigan

Class: RESIDENTIAL-VACANT Zoning:

School: MANTON CONSOLIDATED SCHOOLS

P.R.E. 0%

:

2024 Est TCV 97,584

Building Permit(s)	Date	Number	Status

Improved | X | Vacant

Public Improvements

- Dirt Road
- Gravel Road
- Paved Road
- Storm Sewer
- Sidewalk
- Water
- Sewer
- Electric
- Gas
- Curb
- Street Lights
- Standard Utilities
- Underground Utils.

Topography of Site

- Level
- Rolling
- Low
- High
- Landscaped
- Swamp
- Wooded
- Pond
- Waterfront
- Ravine
- Wetland
- Flood Plain

Who When What

Land Value Estimates for Land Table 4010.LAND VALUES

Description	Frontage	Depth	* Factors * Front	Depth	Rate	%Adj.	Reason	Value
ACREAGE			35.850	Acres	2,722	100		97,584
			35.85	Total Acres			Total Est. Land Value =	97,584

Year	Land Value	Building Value	Assessed Value	Board of Review	Tribunal/ Other	Taxable Value
2024	48,800	0	48,800			16,629C
2023	43,600	0	43,600			15,838C
2022	0	0	0			0
2021	0	0	0			0

*** Information herein deemed reliable but not guaranteed***

Parcel Number: 2410-23-2201-03 Jurisdiction: GREENWOOD TWP County: WEXFORD Printed on 02/15/2024

Grantor	Grantee	Sale Price	Sale Date	Inst. Type	Terms of Sale	Liber & Page	Verified By	Prcnt. Trans.
WESTBROOK, BRENT V & BRIAN	WESTBROOK BRENT V	0	08/08/2023	QC	21-NOT USED/OTHER	695/2782	DEED	0.0

Property Address

N 33 RD

Owner's Name/Address

WESTBROOK BRENT V
1349 E LAKE DR
NOVI MI 48377

Class: RESIDENTIAL-VACANT Zoning:

School: MANTON CONSOLIDATED SCHOOLS

P.R.E. 0%

:

2024 Est TCV 97,584

Building Permit(s)	Date	Number	Status

Improved | X | Vacant

Public Improvements

Dirt Road
Gravel Road
Paved Road
Storm Sewer
Sidewalk
Water
Sewer
Electric
Gas
Curb
Street Lights
Standard Utilities
Underground Utils.

Topography of Site

Level
Rolling
Low
High
Landscaped
Swamp
Wooded
Pond
Waterfront
Ravine
Wetland
Flood Plain

Who When What

Land Value Estimates for Land Table 4010.LAND VALUES

Description	Frontage	Depth	* Factors * Front	Depth	Rate	%Adj.	Reason	Value
ACREAGE			35.850	Acres	2,722	100		97,584
			35.85	Total Acres			Total Est. Land Value =	97,584

Tax Description

PART OF THE WEST HALF, OF THE NORTHWEST QUARTER, SECTION 23, TOWN 24 NORTH, RANGE 10 WEST, GREENWOOD TOWNSHIP, WEXFORD COUNTY, MICHIGAN; MORE FULLY DESCRIBED AS FOLLOWS: COMMENCING AT THE NORTHWEST COMER OF SAID SECTION; THENCE ALONG THE NORTH LINE OF SAID SECTION S 89° 35'51" EA DISTANCE OF 835.33' TO THE POINT OF BEGINNING; THENCE CONTINUING S 89°35'51" E A DISTANCE OF 453.34' TO THE WEST EIGHTH LINE OF SAID SECTION; THENCE ALONG SAID EIGHTH LINE S 02°21 '33" W A DISTANCE OF 2656.80' TO THE EAST-WEST QUARTER LINE OF SAID SECTION; THENCE ALONG SAID QUARTER LINE N 89° 1 O' 49" W A DISTANCE OF 850.45 '; THENCE PARALLEL WITH THE WEST LINE OF SAID SECTION N 02° 15' 15" EA DISTANCE OF349.87'; THENCE N 89°09'48" W A DISTANCE OF 433.07' TO SAID WEST LINE; THENCE ALONG SAID WEST LINE N 02° 15' 15" E .A DISTANCE OF 150.29'; ***BALANCE OF DESCRIPTION ON FILE***

Comments/Influences

Split/Comb. on 12/12/2022 completed 12/12/2022 LINDA ;
Parent Parcel(s): 2410-23-2201-01;
Child Parcel(s): 2410-23-2201-02, 2410-23-2201-03;

Year	Land Value	Building Value	Assessed Value	Board of Review	Tribunal/ Other	Taxable Value
2024	48,800	0	48,800			16,574C
2023	43,600	0	43,600			15,785C
2022	0	0	0			0
2021	0	0	0			0

The Equalizer. Copyright (c) 1999 - 2009. Licensed To: Township of Greenwood, County of Wexford, Michigan

*** Information herein deemed reliable but not guaranteed***

Parcel Number: 2410-23-2301 Jurisdiction: GREENWOOD TWP County: WEXFORD Printed on 02/15/2024

Grantor	Grantee	Sale Price	Sale Date	Inst. Type	Terms of Sale	Liber & Page	Verified By	Prcnt. Trans.
WESTBROOK, BRIAN & MARY	WESTBROOK, BRIAN	0	03/24/2021	QC	21-NOT USED/OTHER	689/1594	AGENT	0.0
WESTBROOK, WILLIAM	WESTBROOK, BRIAN & MARY	100	07/29/2017	WD	09-FAMILY	680 /2377	DEED	0.0

Property Address

8710 N 33 RD

Owner's Name/Address

WESTBROOK, BRIAN
P O BOX 1612
TRAVERSE CITY MI 49685

Tax Description

COM AT NW COR OF SW 1/4 OF NW 1/4; S 200 FT; E TO CENTER OF SILVER CREEK; SE'LY TO A PT 225 FT S OF N 1/8-LINE; TH N 255 FT TO N 1/8 LINE; W TO BEG. 1.19 A M/L GW. SEC. 23 T24N R10W -MANTON-

Comments/Influences

The Equalizer. Copyright (c) 1999 - 2009.
Licensed To: Township of Greenwood, County of Wexford, Michigan

Class: RESIDENTIAL-IMPROV Zoning:

School: MANTON CONSOLIDATED SCHOOLS

P.R.E. 0%

:

2024 Est TCV 12,504 TCV/TFA: 32.91

Building Permit(s)	Date	Number	Status

X	Improved		Vacant

	Public Improvements
	Dirt Road
	Gravel Road
X	Paved Road
	Storm Sewer
	Sidewalk
	Water
	Sewer
X	Electric
	Gas
	Curb
	Street Lights
	Standard Utilities
	Underground Utils.

	Topography of Site
X	Level
X	Rolling
X	Low
	High
	Landscaped
	Swamp
	Wooded
	Pond
	Waterfront
	Ravine
	Wetland
	Flood Plain
X	PINES

Who	When	What
GLA	05/30/2017	INSPECTION
GLA	08/02/2014	INSPECTION

Land Value Estimates for Land Table 4010.LAND VALUES

Description	Frontage	Depth	* Factors * Front	Depth	Rate	%Adj.	Reason	Value
	100.00	0.00	1.0000	1.0000	0	100		0
ACREAGE			1.040 Acres		10,953	100		11,391
ROW			0.150 Acres		0	100		0

100 Actual Front Feet, 1.19 Total Acres Total Est. Land Value = 11,391

Land Improvement Cost Estimates

Description	Rate	Size	% Good	Cash Value
Wood Frame	23.18	100	48	1,113

Total Estimated Land Improvements True Cash Value = 1,113

Year	Land Value	Building Value	Assessed Value	Board of Review	Tribunal/ Other	Taxable Value
2024	5,700	600	6,300			3,225C
2023	3,100	500	3,600			3,072C
2022	2,800	500	3,300			2,926C
2021	3,300	0	3,300			2,833C

*** Information herein deemed reliable but not guaranteed***

Building Type

X	Single Family
	Mobile Home
	Town Home
	Duplex
	A-Frame
X	Wood Frame

Building Style: PLAIN

Yr Built	Remodeled
0	0

Condition: Very Poor

Room List

	Basement
	1st Floor
	2nd Floor
	Bedrooms

(1) Exterior

X	Wood/Shingle
	Aluminum/Vinyl
	Brick
X	Insulation

(2) Windows

X	Many Avg. Few	X	Large Avg. Small

X	Wood Sash
	Metal Sash
	Vinyl Sash
	Double Hung
	Horiz. Slide
	Casement
	Double Glass
	Patio Doors
X	Storms & Screens

(3) Roof

X	Gable		Gambrel
	Hip		Mansard
	Flat		Shed

X	Asphalt Shingle

Chimney:

(3) Roof (cont.)

	Eavestrough
X	Insulation
0	Front Overhang
0	Other Overhang

(4) Interior

X	Drywall Paneled		Plaster Wood T&G

Trim & Decoration

	Ex	X	Ord		Min

Size of Closets

	Lg	X	Ord		Small

Doors:		Solid	X	H.C.	

(5) Floors

Kitchen:
Other: Linoleum
Other: Carpeted

(6) Ceilings

X	Drywall

(7) Excavation

Basement: 0 S.F.
Crawl: 0 S.F.
Slab: 380 S.F.
Height to Joists: 0.0

(8) Basement

	Conc. Block
	Poured Conc.
	Stone
	Treated Wood
	Concrete Floor

(9) Basement Finish

	Recreation SF
	Living SF
	Walkout Doors (B)
	No Floor SF
	Walkout Doors (A)

(10) Floor Support

Joists:
Unsupported Len:
Cntr.Sup:

(11) Heating/Cooling

X	Gas		Oil		Elec.
	Wood		Coal		Steam

	Forced Air w/o Ducts
	Forced Air w/ Ducts
	Forced Hot Water
	Electric Baseboard
	Elec. Ceil. Radiant
	Radiant (in-floor)
	Electric Wall Heat
	Space Heater
	Wall/Floor Furnace
	Forced Heat & Cool
	Heat Pump
X	No Heating/Cooling

	Central Air
	Wood Furnace

(12) Electric

150	Amps Service

No./Qual. of Fixtures

	Ex.	X	Ord.		Min

No. of Elec. Outlets

	Many	X	Ave.		Few

(13) Plumbing

1	Average Fixture(s)
	3 Fixture Bath
	2 Fixture Bath
	Softener, Auto
	Softener, Manual
	Solar Water Heat
	No Plumbing
	Extra Toilet
	Extra Sink
	Separate Shower
	Ceramic Tile Floor
	Ceramic Tile Wains
	Ceramic Tub Alcove
	Vent Fan

(14) Water/Sewer

	Public Water
	Public Sewer
	Water Well
	1000 Gal Septic
	2000 Gal Septic

Lump Sum Items:

(15) Built-ins

	Appliance Allow.
	Cook Top
	Dishwasher
	Garbage Disposal
	Bath Heater
	Vent Fan
	Hot Tub
	Unvented Hood
	Vented Hood
	Intercom
	Jacuzzi Tub
	Jacuzzi repl.Tub
	Oven
	Microwave
	Standard Range
	Self Clean Range
	Sauna
	Trash Compactor
	Central Vacuum
	Security System

(15) Fireplaces

	Interior 1 Story
	Interior 2 Story
	2nd/Same Stack
	Two Sided
	Exterior 1 Story
	Exterior 2 Story
	Prefab 1 Story
	Prefab 2 Story
	Heat Circulator
	Raised Hearth
	Wood Stove
	Direct-Vented Gas

Class: D
Effec. Age: 64
Floor Area: 380
Total Base New : 45,912 E.C.F.
Total Depr Cost: 0 X 1.297
Estimated T.C.V: 0

(16) Porches/Decks

Area	Type

(17) Garage

Year Built:
Car Capacity:
Class:
Exterior:
Brick Ven.:
Stone Ven.:
Common Wall:
Foundation:
Finished ?:
Auto. Doors:
Mech. Doors:
Area:
% Good:
Storage Area:
No Conc. Floor:

Bsmnt Garage:

Carport Area:
Roof:

Cost Est. for Res. Bldg: 1 Single Family PLAIN Cls D Blt 0
(11) Heating System: No Heating/Cooling
Ground Area = 380 SF Floor Area = 380 SF.
Phy/Ab.Phy/Func/Econ/Comb. % Good=45/20/100/0/0
Economic Depreciation because of: POOR CONDITION
Building Areas

Stories	Exterior	Foundation	Size	Cost New	Depr. Cost
1 Story	Block	Slab	380		
			Total:	45,912	0

Other Additions/Adjustments

Totals:	45,912	0

Notes:

ECF (RESIDENTIAL) 1.297 => TCV: 0

*** Information herein deemed reliable but not guaranteed***

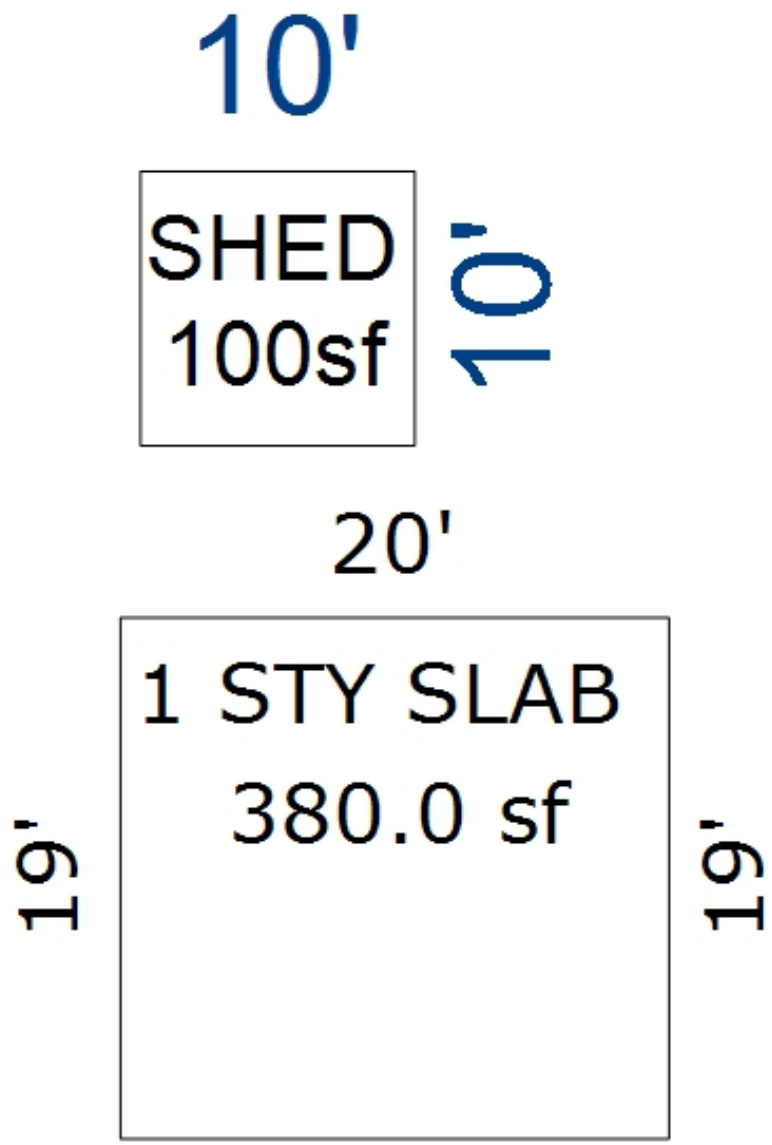

*** Information herein deemed reliable but not guaranteed***

Parcel Number: 2410-23-2302 Jurisdiction: GREENWOOD TWP County: WEXFORD Printed on 02/15/2024

Grantor	Grantee	Sale Price	Sale Date	Inst. Type	Terms of Sale	Liber & Page	Verified By	Prcnt. Trans.
WESTBROOK, FRED D. (PARTIC	WESTBROOK, BRIAN	100	11/17/2020	QC	09-FAMILY	688/2172	AGENT	0.0

Property Address

8694 N 33 RD

Owner's Name/Address

WESTBROOK, BRIAN
P O BOX 1612
TRAVERSE CITY MI 49685

Tax Description

A PAR COM 200 FT S OF NW COR OF SW 1/4 OF NW 1/4: S 250 FT; E TO C/L OF SILVER CREEK; N'LY ALONG C/L OF CREEK TO A PT 200 FT S OF N 1/8- LINE; W TO BEG. --.99 A M/L-- GW. SEC. 23 T24N R10W -MANTON-

Comments/Influences

Class: RESIDENTIAL-IMPROV Zoning:

School: MANTON CONSOLIDATED SCHOOLS

P.R.E. 0%

:

2024 Est TCV 64,938 TCV/TFA: 108.96

Building Permit(s)	Date	Number	Status

X Improved | Vacant

Public Improvements

	Dirt Road
	Gravel Road
X	Paved Road
	Storm Sewer
	Sidewalk
	Water
	Sewer
X	Electric
	Gas
	Curb
	Street Lights
	Standard Utilities
	Underground Utils.

Topography of Site

	Level
X	Rolling
X	Low
	High
	Landscaped
	Swamp
X	Wooded
	Pond
	Waterfront
	Ravine
	Wetland
	Flood Plain

Who When What

GLA 05/30/2017 INSPECTION

Land Value Estimates for Land Table 4010.LAND VALUES

Description	Frontage	Depth	* Factors * Front	Depth	Rate	%Adj.	Reason	Value
ACREAGE			0.810 Acres		10,953	100		8,872
ROW			0.180 Acres		0	100		0
			0.99 Total Acres		Total Est. Land Value =			8,872

Land Improvement Cost Estimates

Description	Rate	Size	% Good	Cash Value
Wood Frame	38.12	48	44	805
Total Estimated Land Improvements True Cash Value =				805

Year	Land Value	Building Value	Assessed Value	Board of Review	Tribunal/ Other	Taxable Value
2024	4,400	28,100	32,500			16,895C
2023	2,400	23,100	25,500			16,091C
2022	2,000	19,600	21,600			15,325C
2021	2,400	19,900	22,300			14,836C

The Equalizer. Copyright (c) 1999 - 2009. Licensed To: Township of Greenwood, County of Wexford, Michigan

*** Information herein deemed reliable but not guaranteed***

Building Type

X	Single Family
	Mobile Home
	Town Home
	Duplex
	A-Frame
X	Wood Frame

Building Style: PLAIN

Yr Built	Remodeled
0	0

Condition: Good

Room List

	Basement
	1st Floor
	2nd Floor
	Bedrooms

(1) Exterior

X	Wood/Shingle
	Aluminum/Vinyl
	Brick
X	Insulation

(2) Windows

	Many		Large
X	Avg.	X	Avg.
	Few		Small

X	Wood Sash
	Metal Sash
	Vinyl Sash
	Double Hung
	Horiz. Slide
	Casement
	Double Glass
	Patio Doors
X	Storms & Screens

(3) Roof

X	Gable		Gambrel
	Hip		Mansard
	Flat		Shed

X	Asphalt Shingle

Chimney:

(3) Roof (cont.)

	Eavestrough
X	Insulation
0	Front Overhang
0	Other Overhang

(4) Interior

	Drywall	X	Plaster
	Paneled		Wood T&G

Trim & Decoration

	Ex	X	Ord		Min

Size of Closets

	Lg	X	Ord		Small

Doors:		Solid	X	H.C.	

(5) Floors

Kitchen:
Other: Linoleum
Other: Carpeted

(6) Ceilings

X	Plaster

(7) Excavation

Basement: 0 S.F.
Crawl: 0 S.F.
Slab: 596 S.F.
Height to Joists: 0.0

(8) Basement

	Conc. Block
	Poured Conc.
	Stone
	Treated Wood
	Concrete Floor

(9) Basement Finish

	Recreation SF
	Living SF
	Walkout Doors (B)
	No Floor SF
	Walkout Doors (A)

(10) Floor Support

Joists:
Unsupported Len:
Cntr.Sup:

(11) Heating/Cooling

X	Gas		Oil		Elec.
	Wood		Coal		Steam

	Forced Air w/o Ducts
X	Forced Air w/ Ducts
	Forced Hot Water
	Electric Baseboard
	Elec. Ceil. Radiant
	Radiant (in-floor)
	Electric Wall Heat
	Space Heater
	Wall/Floor Furnace
	Forced Heat & Cool
	Heat Pump
	No Heating/Cooling

	Central Air
	Wood Furnace

(12) Electric

150	Amps Service

No./Qual. of Fixtures

	Ex.	X	Ord.		Min

No. of Elec. Outlets

	Many	X	Ave.		Few

(13) Plumbing

	Average Fixture(s)
1	3 Fixture Bath
	2 Fixture Bath
	Softener, Auto
	Softener, Manual
	Solar Water Heat
	No Plumbing
	Extra Toilet
	Extra Sink
	Separate Shower
	Ceramic Tile Floor
	Ceramic Tile Wains
	Ceramic Tub Alcove
	Vent Fan

(14) Water/Sewer

	Public Water
	Public Sewer
1	Water Well
1	1000 Gal Septic
	2000 Gal Septic

Lump Sum Items:

(15) Built-ins

	Appliance Allow.
	Cook Top
	Dishwasher
	Garbage Disposal
	Bath Heater
	Vent Fan
	Hot Tub
	Unvented Hood
	Vented Hood
	Intercom
	Jacuzzi Tub
	Jacuzzi repl.Tub
	Oven
	Microwave
	Standard Range
	Self Clean Range
	Sauna
	Trash Compactor
	Central Vacuum
	Security System

(15) Fireplaces

	Interior 1 Story
	Interior 2 Story
	2nd/Same Stack
	Two Sided
	Exterior 1 Story
	Exterior 2 Story
	Prefab 1 Story
	Prefab 2 Story
	Heat Circulator
	Raised Hearth
	Wood Stove
	Direct-Vented Gas

Class: CD
Effec. Age: 49
Floor Area: 596
Total Base New : 83,544 E.C.F.
Total Depr Cost: 42,607 X 1.297
Estimated T.C.V: 55,261

(16) Porches/Decks

Area	Type

(17) Garage

Year Built:
Car Capacity:
Class:
Exterior:
Brick Ven.:
Stone Ven.:
Common Wall:
Foundation:
Finished ?:
Auto. Doors:
Mech. Doors:
Area:
% Good:
Storage Area:
No Conc. Floor:

Bsmnt Garage:

Carport Area:
Roof:

Cost Est. for Res. Bldg: 1 Single Family PLAIN Cls CD Blt 0
(11) Heating System: Forced Air w/ Ducts
Ground Area = 596 SF Floor Area = 596 SF.
Phy/Ab.Phy/Func/Econ/Comb. % Good=51/100/100/100/51
Building Areas

Stories	Exterior	Foundation	Size	Cost New	Depr. Cost
1 Story	Siding	Slab	596		
			Total:	73,282	37,373
Other Additions/Adjustments					
Water/Sewer					
1000 Gal Septic			1	4,582	2,337
Water Well, 100 Feet			1	5,680	2,897
			Totals:	83,544	42,607

Notes:
ECF (RESIDENTIAL) 1.297 => TCV: 55,261

*** Information herein deemed reliable but not guaranteed***

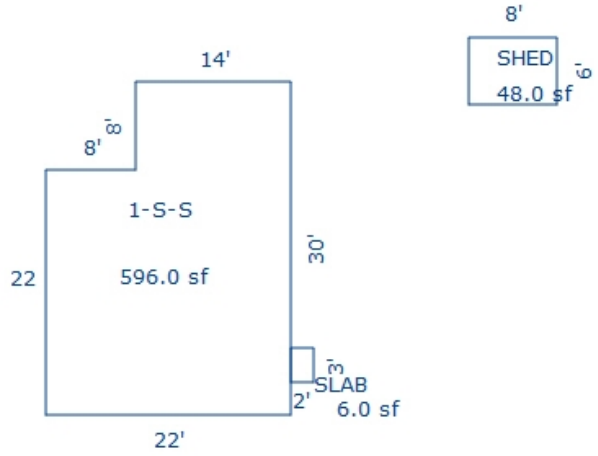

Sketch by Apex Sketch

*** Information herein deemed reliable but not guaranteed***

Parcel Number: 2410-23-2303-01 Jurisdiction: GREENWOOD TWP County: WEXFORD Printed on 02/15/2024

Grantor	Grantee	Sale Price	Sale Date	Inst. Type	Terms of Sale	Liber & Page	Verified By	Prcnt. Trans.
WALKER, BRADLEY	WALKER, BARDLEY M & JULIE	0	12/19/2022	QC	14-INTO/OUT OF TRUST	694/1407	DEED	0.0
WALKER, BRADLEY M	WALKER, BARDLEY M & JULIE	1	10/06/2022	QC	09-FAMILY	694/161	DEED	0.0
KRUZONA, STEPHEN	KRUZONA, STEPHEN & JEANNE	1	04/21/2022	OTH	18-LIFE ESTATE	693/72	DEED	0.0
KRUZONA STEPHEN	KRUZONA, STEPHEN	0	09/14/2018	QC	21-NOT USED/OTHER	683/1409	DEED	0.0

Property Address

8624 N 33 RD

Owner's Name/Address

KRUZONA, STEPHEN & JEANNE LE
WALKER, BRADLEY M & JULIE A
17796 COVE ST
SPRING LAKE MI 49456

Taxpayer's Name/Address

WALKER, BARDLEY M & JULIE A

Tax Description

COM 118 RDS S OF NW COR OF SEC 23; S 150 FT; E TO CENT OF SILVER CREEK; N'LY ALONG CENTER OF CREEK 150 FT M/L; TH W TO POB. --.83 A M/L-- (CONVEY A STRIP 150 FT WIDE N&S) GW. SEC. 23 T24N R10W -MANTON- Split/Combined on 01/14/2019 from 2410-23-2303, 2410-23-2201;

Comments/Influences

Split/Comb. on 01/14/2019 completed 01/14/2019 LINDA ;
Parent Parcel(s): 2410-23-2303, 2410-23-2201;
Child Parcel(s): 2410-23-2201-01, 2410-23-2303-01;

The Equalizer. Copyright (c) 1999 - 2009. Licensed To: Township of Greenwood, County of Wexford, Michigan

Class: RESIDENTIAL-IMPROV Zoning:

School: MANTON CONSOLIDATED SCHOOLS

P.R.E. 0%

:

2024 Est TCV 77,527 TCV/TFA: 116.06

Building Permit(s)	Date	Number	Status

X Improved | Vacant

Public Improvements

- Dirt Road
- Gravel Road
- Paved Road
- Storm Sewer
- Sidewalk
- Water
- Sewer
- Electric
- Gas
- Curb
- Street Lights
- Standard Utilities
- Underground Utils.

Topography of Site

- Level
- Rolling
- Low
- High
- Landscaped
- Swamp
- Wooded
- Pond
- Waterfront
- Ravine
- Wetland
- Flood Plain

Who	When	What
GLA	05/13/2021	INSPECTION

Land Value Estimates for Land Table 4010.LAND VALUES

Description	Frontage	Depth	* Factors * Front	Depth	Rate	%Adj.	Reason	Value
ACREAGE			0.946 Acres		10,953	100		10,362
			0.151 Acres		0	100		0
			1.10 Total Acres		Total Est. Land Value =			10,362

Land Improvement Cost Estimates

Description	Rate	Size	% Good	Cash Value
D/W/P: 3.5 Concrete	5.86	22	45	58
Total Estimated Land Improvements True Cash Value =				58

Year	Land Value	Building Value	Assessed Value	Board of Review	Tribunal/ Other	Taxable Value
2024	5,200	33,600	38,800			24,791C
2023	2,800	27,400	30,200			23,611C
2022	2,400	23,300	25,700			22,487C
2021	2,800	26,200	29,000			21,769C

*** Information herein deemed reliable but not guaranteed***

Building Type

X	Single Family
	Mobile Home
	Town Home
	Duplex
	A-Frame
X	Wood Frame

Building Style: CABIN

Yr Built	Remodeled
0	0

Condition: Fair

Room List

	Basement
	1st Floor
	2nd Floor
	Bedrooms

(1) Exterior

	Wood/Shingle
	Aluminum/Vinyl
	Brick
X	Block
	Insulation

(2) Windows

X	Many Avg. Few	X	Large Avg. Small

X	Wood Sash
	Metal Sash
	Vinyl Sash
	Double Hung
	Horiz. Slide
	Casement
	Double Glass
	Patio Doors
	Storms & Screens

(3) Roof

X	Gable		Gambrel
	Hip		Mansard
	Flat		Shed

X	Asphalt Shingle

Chimney: Brick

(3) Roof (cont.)

	Eavestrough
	Insulation
0	Front Overhang
0	Other Overhang

(4) Interior

	Drywall		Plaster
	Paneled		Wood T&G

Trim & Decoration

	Ex		Ord		Min

Size of Closets

	Lg		Ord		Small

Doors:		Solid		H.C.

(5) Floors

Kitchen:
Other:
Other:

(6) Ceilings

(7) Excavation

Basement: 0 S.F.
Crawl: 0 S.F.
Slab: 668 S.F.
Height to Joists: 0.0

(8) Basement

	Conc. Block
	Poured Conc.
	Stone
	Treated Wood
	Concrete Floor

(9) Basement Finish

	Recreation	SF
	Living	SF
	Walkout Doors (B)	
	No Floor	SF
	Walkout Doors (A)	

(10) Floor Support

Joists:
Unsupported Len:
Cntr.Sup:

(11) Heating/Cooling

X	Gas		Oil		Elec.
	Wood		Coal		Steam

	Forced Air w/o Ducts
X	Forced Air w/ Ducts
	Forced Hot Water
	Electric Baseboard
	Elec. Ceil. Radiant
	Radiant (in-floor)
	Electric Wall Heat
	Space Heater
	Wall/Floor Furnace
	Forced Heat & Cool
	Heat Pump
	No Heating/Cooling

	Central Air
	Wood Furnace

(12) Electric

0	Amps Service

No./Qual. of Fixtures

	Ex.		Ord.		Min

No. of Elec. Outlets

	Many		Ave.		Few

(13) Plumbing

1	Average Fixture(s)
	3 Fixture Bath
	2 Fixture Bath
	Softener, Auto
	Softener, Manual
	Solar Water Heat
	No Plumbing
	Extra Toilet
	Extra Sink
	Separate Shower
	Ceramic Tile Floor
	Ceramic Tile Wains
	Ceramic Tub Alcove
	Vent Fan

(14) Water/Sewer

	Public Water
	Public Sewer
1	Water Well
1	1000 Gal Septic
	2000 Gal Septic

Lump Sum Items:

(15) Built-ins

	Appliance Allow.
	Cook Top
	Dishwasher
	Garbage Disposal
	Bath Heater
	Vent Fan
	Hot Tub
	Unvented Hood
	Vented Hood
	Intercom
	Jacuzzi Tub
	Jacuzzi repl.Tub
	Oven
	Microwave
	Standard Range
	Self Clean Range
	Sauna
	Trash Compactor
	Central Vacuum
	Security System

(15) Fireplaces

	Interior 1 Story
	Interior 2 Story
	2nd/Same Stack
	Two Sided
	Exterior 1 Story
	Exterior 2 Story
	Prefab 1 Story
	Prefab 2 Story
	Heat Circulator
	Raised Hearth
	Wood Stove
	Direct-Vented Gas

Class: D
Effec. Age: 45
Floor Area: 668
Total Base New : 94,074 E.C.F.
Total Depr Cost: 51,740 X 1.297
Estimated T.C.V: 67,107

(16) Porches/Decks

Area	Type
140	CGEP (1 Story)

(17) Garage

Year Built:
Car Capacity:
Class:
Exterior:
Brick Ven.:
Stone Ven.:
Common Wall:
Foundation:
Finished ?:
Auto. Doors:
Mech. Doors:
Area:
% Good:
Storage Area:
No Conc. Floor:

Bsmnt Garage:

Carport Area:
Roof:

Cost Est. for Res. Bldg: 1 Single Family CABIN Cls D Blt 0
(11) Heating System: Forced Air w/ Ducts
Ground Area = 668 SF Floor Area = 668 SF.
Phy/Ab.Phy/Func/Econ/Comb. % Good=55/100/100/100/55
Building Areas

Stories	Exterior	Foundation	Size	Cost New	Depr. Cost
1 Story	Block	Slab	360		
1 Story	Siding	Slab	308		
			Total:	76,581	42,119
Other Additions/Adjustments					
Water/Sewer					
1000 Gal Septic			1	4,258	2,342
Water Well, 100 Feet			1	5,584	3,071
Porches					
CGEP (1 Story)			140	7,651	4,208
			Totals:	94,074	51,740

Notes:

ECF (RESIDENTIAL) 1.297 => TCV: 67,107

*** Information herein deemed reliable but not guaranteed***

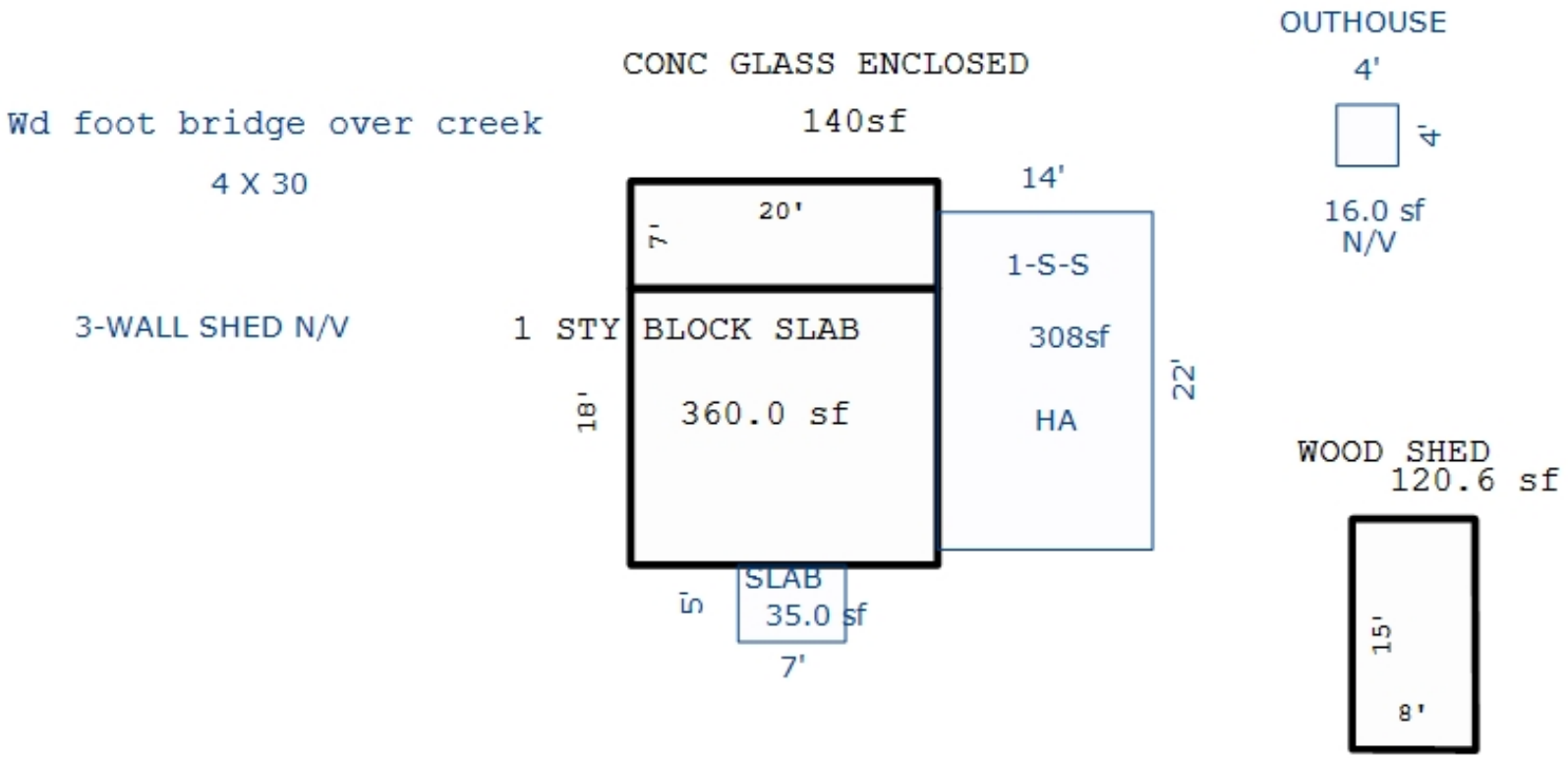

*** Information herein deemed reliable but not guaranteed***

Parcel Number: 2410-23-2304 Jurisdiction: GREENWOOD TWP County: WEXFORD Printed on 02/15/2024

Grantor	Grantee	Sale Price	Sale Date	Inst. Type	Terms of Sale	Liber & Page	Verified By	Prcnt. Trans.
JONES, RONALD D	WESTBROOK, BRENT & INNA	80,000	11/21/2012	WD	03-ARM'S LENGTH	653/2228	DEED	100.0
MCCORMICK, JOHN & KAREN	JONES, RONALD D	67,000	06/06/2005	WD	08-ESTATE	573:2934	DEED	0.0
MCCORMICK, JOHN & KAREN	JONES, RONALD D	67,000	07/25/2003	MLC	18-LIFE ESTATE	503:275	DEED	0.0

Property Address
8520 N 33 RD

Owner's Name/Address
WESTBROOK, BRENT & INNA
8520 N 33 RD
MANTON MI 49663

Tax Description
W 433 FT OF S 350 FT OF W 1/2 OF NW 1/4
3.5 A. GW. SEC. 23 T24N R10W -MANTON-

Comments/Influences

Class: RESIDENTIAL-IMPROV Zoning:
School: MANTON CONSOLIDATED SCHOOLS
P.R.E. 0%
:
2024 Est TCV 117,301 TCV/TFA: 133.30

Building Permit(s)	Date	Number	Status
RESIDENTIAL - REMODEL	03/26/2004	PB12058	
RESIDENTIAL - REMODEL	08/12/2003	PM6920	

X Improved | Vacant

Public Improvements
- Dirt Road
- Gravel Road
- X Paved Road
- Storm Sewer
- Sidewalk
- Water
- Sewer
- X Electric
- Gas
- Curb
- Street Lights
- Standard Utilities
- Underground Utils.

Topography of Site
- Level
- X Rolling
- X Low
- High
- Landscaped
- Swamp
- X Wooded
- Pond
- Waterfront
- Ravine
- Wetland
- Flood Plain
- X PINES/OPEN

Who	When	What
GLA	05/30/2017	INSPECTION

Land Value Estimates for Land Table 4010.LAND VALUES

Description	Frontage	Depth	* Factors * Front	Depth	Rate	%Adj.	Reason	Value
ACREAGE			3.240 Acres		5,393	100		17,474
ROW			0.260 Acres		0	100		0
			3.50 Total Acres		Total Est. Land Value =			17,474

Land Improvement Cost Estimates

Description	Rate	Size	% Good	Cash Value
D/W/P: 4in Concrete	6.11	98	45	270
Wood Frame	22.35	120	41	1,100
Total Estimated Land Improvements True Cash Value =				1,370

Year	Land Value	Building Value	Assessed Value	Board of Review	Tribunal/ Other	Taxable Value
2024	8,700	50,000	58,700			33,139C
2023	7,600	41,000	48,600			31,561C
2022	6,600	34,900	41,500			30,059C
2021	6,800	35,400	42,200			29,099C

The Equalizer. Copyright (c) 1999 - 2009.
Licensed To: Township of Greenwood, County of Wexford, Michigan

*** Information herein deemed reliable but not guaranteed***

Building Type

X	Single Family
	Mobile Home
	Town Home
	Duplex
	A-Frame
X	Wood Frame

Building Style: PLAIN

Yr Built	Remodeled
0	0

Condition: Good

Room List

	Basement
	1st Floor
	2nd Floor
	Bedrooms

(1) Exterior

	Wood/Shingle
X	Aluminum/Vinyl
	Brick
X	Insulation

(2) Windows

X	Many Avg. Few	X	Large Avg. Small

	Wood Sash
	Metal Sash
X	Vinyl Sash
	Double Hung
	Horiz. Slide
	Casement
	Double Glass
	Patio Doors
X	Storms & Screens

(3) Roof

X	Gable		Gambrel
	Hip		Mansard
	Flat		Shed

X	Asphalt Shingle

Chimney:

(3) Roof (cont.)

	Eavestrough
X	Insulation
0	Front Overhang
0	Other Overhang

(4) Interior

X	Drywall Paneled		Plaster Wood T&G

Trim & Decoration

	Ex	X	Ord		Min

Size of Closets

	Lg	X	Ord		Small

Doors: | | Solid | X | H.C.

(5) Floors

Kitchen:
Other: Linoleum
Other: Carpeted

(6) Ceilings

X	Drywall

(7) Excavation

Basement: 0 S.F.
Crawl: 720 S.F.
Slab: 160 S.F.
Height to Joists: 0.0

(8) Basement

	Conc. Block
	Poured Conc.
	Stone
	Treated Wood
	Concrete Floor

(9) Basement Finish

	Recreation SF
	Living SF
	Walkout Doors (B)
	No Floor SF
	Walkout Doors (A)

(10) Floor Support

Joists:
Unsupported Len:
Cntr.Sup:

(11) Heating/Cooling

X	Gas		Oil		Elec.
	Wood		Coal		Steam

	Forced Air w/o Ducts
X	Forced Air w/ Ducts
	Forced Hot Water
	Electric Baseboard
	Elec. Ceil. Radiant
	Radiant (in-floor)
	Electric Wall Heat
	Space Heater
	Wall/Floor Furnace
	Forced Heat & Cool
	Heat Pump
	No Heating/Cooling

	Central Air
	Wood Furnace

(12) Electric

150	Amps Service

No./Qual. of Fixtures

	Ex.	X	Ord.		Min

No. of Elec. Outlets

	Many	X	Ave.		Few

(13) Plumbing

	Average Fixture(s)
1	3 Fixture Bath
	2 Fixture Bath
	Softener, Auto
	Softener, Manual
	Solar Water Heat
	No Plumbing
	Extra Toilet
	Extra Sink
	Separate Shower
	Ceramic Tile Floor
	Ceramic Tile Wains
	Ceramic Tub Alcove
	Vent Fan

(14) Water/Sewer

	Public Water
	Public Sewer
1	Water Well
1	1000 Gal Septic
	2000 Gal Septic

Lump Sum Items:

(15) Built-ins

	Appliance Allow.
	Cook Top
	Dishwasher
	Garbage Disposal
	Bath Heater
	Vent Fan
	Hot Tub
	Unvented Hood
	Vented Hood
	Intercom
	Jacuzzi Tub
	Jacuzzi repl.Tub
	Oven
	Microwave
	Standard Range
	Self Clean Range
	Sauna
	Trash Compactor
	Central Vacuum
	Security System

(15) Fireplaces

	Interior 1 Story
	Interior 2 Story
	2nd/Same Stack
	Two Sided
1	Exterior 1 Story
	Exterior 2 Story
	Prefab 1 Story
	Prefab 2 Story
	Heat Circulator
	Raised Hearth
	Wood Stove
	Direct-Vented Gas

Class: D
Effec. Age: 48
Floor Area: 880
Total Base New : 145,984 E.C.F.
Total Depr Cost: 75,911 X 1.297
Estimated T.C.V: 98,457

(16) Porches/Decks

Area	Type
398	WPP
80	WCP (1 Story)
210	WCP (1 Story)
216	Treated Wood

(17) Garage

Year Built:
Car Capacity:
Class: D
Exterior: Pole
Brick Ven.: 0
Stone Ven.: 0
Common Wall: Detache
Foundation: 18 Inch
Finished ?:
Auto. Doors: 0
Mech. Doors: 0
Area: 600
% Good: 0
Storage Area: 0
No Conc. Floor: 0

Bsmnt Garage:

Carport Area:
Roof:

Cost Est. for Res. Bldg: 1 Single Family PLAIN Cls D Blt 0
(11) Heating System: Forced Air w/ Ducts
Ground Area = 880 SF Floor Area = 880 SF.
Phy/Ab.Phy/Func/Econ/Comb. % Good=52/100/100/100/52

Building Areas

Stories	Exterior	Foundation	Size	Cost New	Depr. Cost
1 Story	Siding	Crawl Space	720		
1 Story	Siding	Slab	160		
			Total:	98,211	51,070

Other Additions/Adjustments

Water/Sewer			
1000 Gal Septic	1	4,293	2,232
Water Well, 100 Feet	1	5,545	2,883
Porches			
WPP	398	5,242	2,726
WCP (1 Story)	80	3,478	1,809
WCP (1 Story)	210	6,712	3,490
Deck			
Treated Wood	216	4,197	2,182
Garages			
Class: D Exterior: Pole (Unfinished)			
Base Cost	600	13,302	6,917
Fireplaces			
Exterior 1 Story	1	5,004	2,602
	Totals:	145,984	75,911

Notes:

ECF (RESIDENTIAL) 1.297 => TCV: 98,457

*** Information herein deemed reliable but not guaranteed***

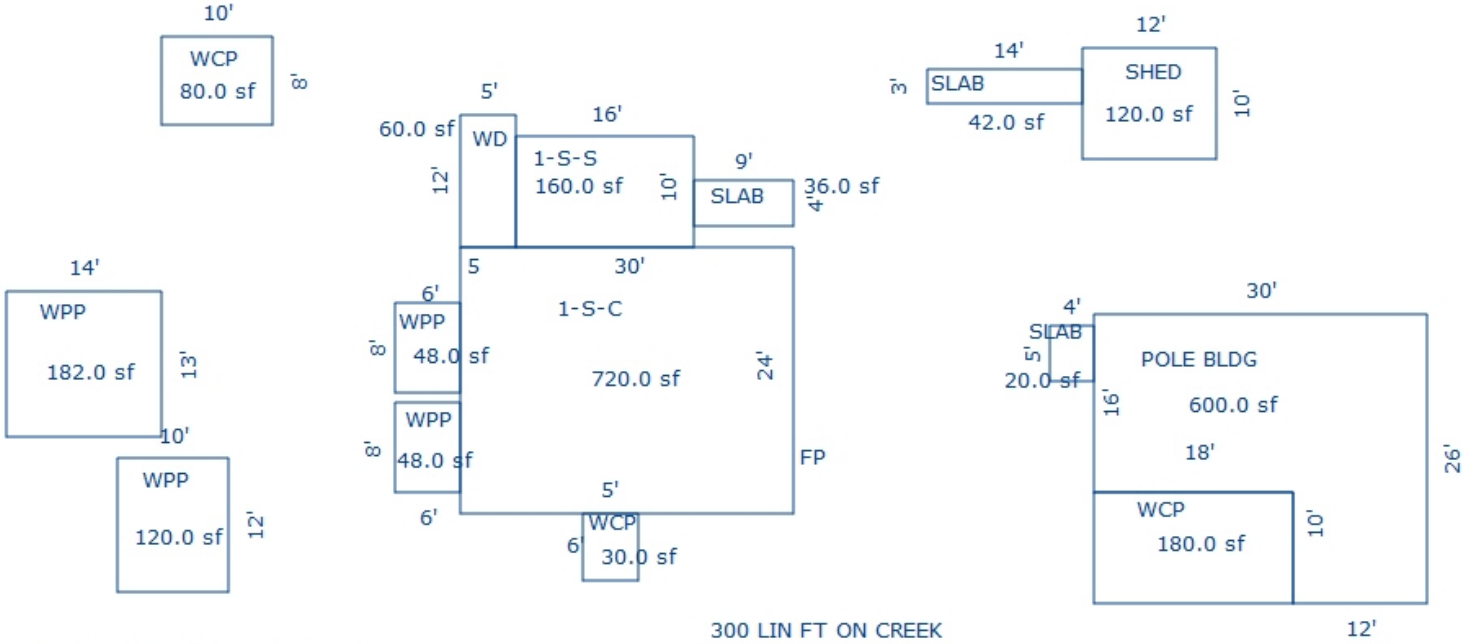

OTHER WD 36 X 3 = 108 SQ FT
OTHER WD 16 X 3 = 48 SQ FT

Sketch by Apex Sketch

*** Information herein deemed reliable but not guaranteed***

Parcel Number: 2410-23-3101 Jurisdiction: GREENWOOD TWP County: WEXFORD Printed on 02/15/2024

Grantor	Grantee	Sale Price	Sale Date	Inst. Type	Terms of Sale	Liber & Page	Verified By	Prcnt. Trans.

Property Address	Class: AGRICULTURAL-VACAN	Zoning:	Building Permit(s)	Date	Number	Status
	School: MANTON CONSOLIDATED SCHOOLS					
Owner's Name/Address	P.R.E. 0%					
	:					
STATE OF MICHIGAN P O BOX 30735 GRANTS ADMINISTRATION LANSING MI 48909-8235	2024 Est TCV 0					

Improved | X | Vacant

Land Value Estimates for Land Table 4010.LAND VALUES

Description	Frontage	Depth	* Factors * Front	Depth	Rate	%Adj.	Reason	Value
ACREAGE			79.000 Acres		2,544	100		201,002
			1.000 Acres		0	100		0
			80.00 Total Acres		Total Est. Land Value =			201,002

Tax Description

N 1/2 OF SW 1/4 80 A. GW. SEC. 23 T24N R10W -MANTON-

Comments/Influences

Public Improvements

	Dirt Road
X	Gravel Road
X	Paved Road
	Storm Sewer
	Sidewalk
	Water
	Sewer
X	Electric
	Gas
	Curb
	Street Lights
	Standard Utilities
	Underground Utils.

Topography of Site

	Level
X	Rolling
	Low
	High
	Landscaped
	Swamp
X	Wooded
	Pond
	Waterfront
	Ravine
	Wetland
	Flood Plain
X	PINES/OPEN

Who	When	What
GLA	05/30/2017	INSPECTION

Year	Land Value	Building Value	Assessed Value	Board of Review	Tribunal/ Other	Taxable Value
2024	EXEMPT	EXEMPT	EXEMPT			EXEMPT
2023	EXEMPT	EXEMPT	EXEMPT			EXEMPT
2022	0	0	0			0
2021	0	0	0			0

The Equalizer. Copyright (c) 1999 - 2009. Licensed To: Township of Greenwood, County of Wexford, Michigan

*** Information herein deemed reliable but not guaranteed***

Parcel Number: 2410-23-3301 Jurisdiction: GREENWOOD TWP County: WEXFORD Printed on 02/15/2024

Grantor	Grantee	Sale Price	Sale Date	Inst. Type	Terms of Sale	Liber & Page	Verified By	Prcnt. Trans.
BIGELOW, DAVID W.	BIGELOW, MICHELLE	0	08/08/2012	QC	06-COURT JUDGEMENT	650/2510	DEED	0.0

Property Address

8202 N 33 RD

Owner's Name/Address

BIGELOW, MICHELLE
8202 N 33 RD
MANTON MI 49663

Tax Description

N 17/40THS OF SW 1/4 OF SW 1/4 EXC N 150 FT OF W 290.2 FT; ALSO, N 150 FT OF W 290.2 T OF S 23/40TH OF SW 1/4 OF SW 1/4 --16.51 A M/L-- GW. SEC. 23 T24N R10W -MANTON-

Comments/Influences

Default Comments

The Equalizer. Copyright (c) 1999 - 2009. Licensed To: Township of Greenwood, County of Wexford, Michigan

Class: RESIDENTIAL-IMPROV Zoning:

School: MANTON CONSOLIDATED SCHOOLS

P.R.E. 100% / /

:

2024 Est TCV 415,285 TCV/TFA: 289.20

Building Permit(s)	Date	Number	Status
Res. New Construction	11/05/2015	PB15-0244	COMPLETE
Res. New Construction	09/14/2015	PB15--0183	COMPLETE
MOBILE HOME	11/17/2014	PB14-0326	COMPLETE
RESIDENTIAL - REMODEL	07/10/2003	PB11683	

X Improved | Vacant

	Public Improvements
	Dirt Road
X	Gravel Road
X	Paved Road
	Storm Sewer
	Sidewalk
	Water
	Sewer
X	Electric
	Gas
	Curb
	Street Lights
	Standard Utilities
	Underground Utils.

	Topography of Site
	Level
X	Rolling
	Low
	High
	Landscaped
	Swamp
X	Wooded
	Pond
	Waterfront
	Ravine
	Wetland
	Flood Plain
X	PINES/OPEN

Who	When	What
GLA	05/30/2017	INSPECTION
GLA	12/02/2014	INSPECTION

Land Value Estimates for Land Table 4010.LAND VALUES

Description	Frontage	Depth	* Factors * Front	Depth	Rate	%Adj.	Reason	Value
	300.00	0.00	1.0000	1.0000	0	100		0
ACREAGE			16.090 Acres		3,200	100		51,488
ROW			0.420 Acres		0	100		0

300 Actual Front Feet, 16.51 Total Acres Total Est. Land Value = 51,488

Year	Land Value	Building Value	Assessed Value	Board of Review	Tribunal/ Other	Taxable Value
2024	25,700	181,900	207,600			91,062C
2023	20,900	148,200	169,100			86,726C
2022	19,500	124,800	144,300			82,597C
2021	19,600	126,100	145,700			79,959C

*** Information herein deemed reliable but not guaranteed***

Building Type

X	Single Family
	Mobile Home
	Town Home
	Duplex
	A-Frame
X	Wood Frame

Building Style: PLAIN

Yr Built	Remodeled
2002 FIRE	2016

Condition: Good

Room List

	Basement
	1st Floor
	2nd Floor
	Bedrooms

(1) Exterior

	Wood/Shingle
X	Aluminum/Vinyl
	Brick
X	Insulation

(2) Windows

X	Many Avg. Few	X	Large Avg. Small

	Wood Sash
	Metal Sash
X	Vinyl Sash
	Double Hung
	Horiz. Slide
	Casement
	Double Glass
	Patio Doors
X	Storms & Screens

(3) Roof

X	Gable Hip Flat		Gambrel Mansard Shed
X	Asphalt Shingle		

Chimney:

(3) Roof (cont.)

	Eavestrough
X	Insulation
0	Front Overhang
0	Other Overhang

(4) Interior

X	Drywall Paneled		Plaster Wood T&G

Trim & Decoration

	Ex	X	Ord		Min

Size of Closets

	Lg	X	Ord		Small

Doors:		Solid	X	H.C.	

(5) Floors

Kitchen:
Other: Linoleum
Other: Carpeted

(6) Ceilings

X	Drywall

(7) Excavation

Basement: 1320 S.F.
Crawl: 0 S.F.
Slab: 0 S.F.
Height to Joists: 0.0

(8) Basement

	Conc. Block
	Poured Conc.
	Stone
	Treated Wood
	Concrete Floor

(9) Basement Finish

	Recreation SF
	Living SF
	Walkout Doors (B)
	No Floor SF
	Walkout Doors (A)

(10) Floor Support

Joists:
Unsupported Len:
Cntr.Sup:

(11) Heating/Cooling

X	Gas Wood		Oil Coal		Elec. Steam	

	Forced Air w/o Ducts
	Forced Air w/ Ducts
	Forced Hot Water
	Electric Baseboard
	Elec. Ceil. Radiant
	Radiant (in-floor)
	Electric Wall Heat
	Space Heater
	Wall/Floor Furnace
X	Forced Heat & Cool
	Heat Pump
	No Heating/Cooling

X	Central Air
	Wood Furnace

(12) Electric

150	Amps Service

No./Qual. of Fixtures

	Ex.	X	Ord.		Min

No. of Elec. Outlets

	Many	X	Ave.		Few

(13) Plumbing

	Average Fixture(s)
2	3 Fixture Bath
	2 Fixture Bath
	Softener, Auto
	Softener, Manual
	Solar Water Heat
	No Plumbing
	Extra Toilet
	Extra Sink
	Separate Shower
	Ceramic Tile Floor
	Ceramic Tile Wains
	Ceramic Tub Alcove
	Vent Fan

(14) Water/Sewer

	Public Water
	Public Sewer
1	Water Well
1	1000 Gal Septic
	2000 Gal Septic

Lump Sum Items:

(15) Built-ins

	Appliance Allow.
	Cook Top
	Dishwasher
	Garbage Disposal
	Bath Heater
	Vent Fan
	Hot Tub
	Unvented Hood
	Vented Hood
	Intercom
	Jacuzzi Tub
	Jacuzzi repl.Tub
	Oven
	Microwave
	Standard Range
	Self Clean Range
	Sauna
	Trash Compactor
	Central Vacuum
	Security System

(15) Fireplaces

	Interior 1 Story
	Interior 2 Story
	2nd/Same Stack
	Two Sided
	Exterior 1 Story
	Exterior 2 Story
1	Prefab 1 Story
	Prefab 2 Story
	Heat Circulator
	Raised Hearth
	Wood Stove
	Direct-Vented Gas

Class: C
Effec. Age: 13
Floor Area: 1,436
Total Base New : 322,403 E.C.F.
Total Depr Cost: 280,491 X 1.297
Estimated T.C.V: 363,797

(16) Porches/Decks

Area	Type
284	WCP (1 Story)
140	WGEP (1 Story)
504	WPP

(17) Garage

Year Built:
Car Capacity:
Class: C
Exterior: Siding
Brick Ven.: 0
Stone Ven.: 0
Common Wall: 1/2 Wal
Foundation: 42 Inch
Finished ?:
Auto. Doors: 0
Mech. Doors: 0
Area: 720
% Good: 0
Storage Area: 0
No Conc. Floor: 0

Bsmnt Garage:

Carport Area:
Roof:

Cost Est. for Res. Bldg: 1 Single Family PLAIN Cls C Blt 2002
(11) Heating System: Forced Heat & Cool, Air Conditioning
Ground Area = 1180 SF Floor Area = 1436 SF.
Phy/Ab.Phy/Func/Econ/Comb. % Good=87/100/100/100/87

Building Areas

Stories	Exterior	Foundation	Size	Cost New	Depr. Cost
1.5 Story	Siding	Basement	480		
1 Story	Siding	Basement	168		
1 Story	Siding	Basement	532		
1 Story	Siding	Overhang	16		
			Total:	222,988	193,999

Other Additions/Adjustments

Plumbing			
3 Fixture Bath	1	4,678	4,070
Water/Sewer			
1000 Gal Septic	1	4,899	4,262
Water Well, 100 Feet	1	5,849	5,089
Porches			
WCP (1 Story)	284	9,713	8,450
WGEP (1 Story)	140	12,107	10,533
Foundation: Basement	140	3,595	3,128
WPP	504	8,508	7,402
Garages			
Class: C Exterior: Siding Foundation: 42 Inch (Unfinished)			
Base Cost	720	29,232	25,432
Common Wall: 1/2 Wall	1	-1,352	-1,176
Class: C Exterior: Pole (Unfinished)			
Base Cost	384	12,733	11,078
No Concrete Floor	384	-2,569	-2,235
Class: D Exterior: Pole (Unfinished)			

<<<<< Calculations too long. See Valuation printout for complete pricing. >>>>>

*** Information herein deemed reliable but not guaranteed***

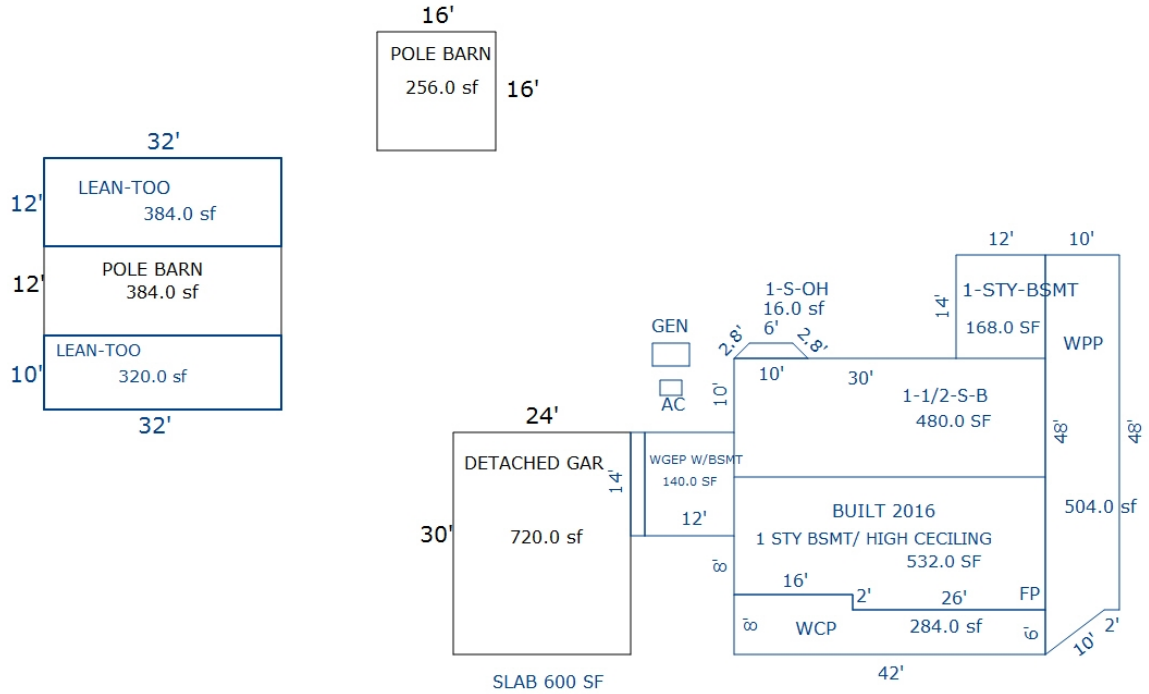

Sketch by Apex Sketch

*** Information herein deemed reliable but not guaranteed***

Parcel Number: 2410-23-3302-01 Jurisdiction: GREENWOOD TWP County: WEXFORD Printed on 02/15/2024

Grantor	Grantee	Sale Price	Sale Date	Inst. Type	Terms of Sale	Liber & Page	Verified By	Prcnt. Trans.
SWINEHART, FREDA	ARNOLD, NOCHOLAS R	195,000	02/24/2022	WD	03-ARM'S LENGTH	692/820	DEED	100.0
SWINEHART, REO L.(PR KAYCE	SWINEHART, FREDA	0	05/17/2021	WD	06-COURT JUDGEMENT	690/466	AGENT	0.0

Property Address

4081 E 10 RD

Owner's Name/Address

ARNOLD, NOCHOLAS R
4081 E 10 RD
MANTON MI 49663

Tax Description

COM AT SW COR OF SEC E 390 FT TO POB: N 242 FT; W 180 FT; N 178 FT; W 210 FT; N 11.62 FT; E 290.35 FT; N 330.17 FT; E 394.55 FT; S 759.98 FT W TO POB. 6.74 A M/L-- GW. SEC. 23 T24N R10W -MANTON- SPLIT ON 05/14/2009 FROM 2410-23-3302;

Comments/Influences

Split/Comb. on 05/14/2009 completed / / DEB OWNER REQUEST ;
Parent Parcel(s): 2410-23-3302;
Child Parcel(s): 2410-23-3302-01, 2410-23-3302-02, 2410-23-3302-03;

The Equalizer. Copyright (c) 1999 - 2009. Licensed To: Township of Greenwood, County of Wexford, Michigan

Class: RESIDENTIAL-IMPROV Zoning:

School: MANTON CONSOLIDATED SCHOOLS

P.R.E. 100% 03/10/2022

:

2024 Est TCV 184,443 TCV/TFA: 142.32

Building Permit(s)	Date	Number	Status

X Improved | Vacant

Public Improvements

- Dirt Road
- Gravel Road
- X Paved Road
- Storm Sewer
- Sidewalk
- Water
- Sewer
- X Electric
- Gas
- Curb
- Street Lights
- Standard Utilities
- Underground Utils.

Topography of Site

- X Level
- Rolling
- Low
- High
- Landscaped
- Swamp
- Wooded
- Pond
- Waterfront
- Ravine
- Wetland
- Flood Plain
- X PINES/OPEN

Who	When	What
GLA	05/30/2017	INSPECTION

Land Value Estimates for Land Table 4010.LAND VALUES

Description	Frontage	Depth	* Factors * Front	Depth	Rate	%Adj.	Reason	Value
ACREAGE			6.520 Acres		5,112	100		33,330
ROW			0.220 Acres		0	100		0
			6.74 Total Acres		Total Est. Land Value =			33,330

Land Improvement Cost Estimates

Description	Rate	Size	% Good	Cash Value
D/W/P: 4in Concrete	7.01	232	45	732
Wood Frame	38.12	48	45	823
Total Estimated Land Improvements True Cash Value =				1,555

Year	Land Value	Building Value	Assessed Value	Board of Review	Tribunal/ Other	Taxable Value
2024	16,700	75,500	92,200			77,490C
2023	11,600	62,200	73,800			73,800S
2022	9,800	52,900	62,700			47,040C
2021	11,100	53,800	64,900			45,538C

*** Information herein deemed reliable but not guaranteed***

Building Type

X	Single Family
	Mobile Home
	Town Home
	Duplex
	A-Frame
X	Wood Frame

Building Style: RANCH

Yr Built	Remodeled
0	0

Condition: Average

Room List

	Basement
	1st Floor
	2nd Floor
	Bedrooms

(1) Exterior

	Wood/Shingle
X	Aluminum/Vinyl
	Brick
X	Insulation

(2) Windows

X	Many Avg. Few	X	Large Avg. Small

	Wood Sash
	Metal Sash
X	Vinyl Sash
	Double Hung
	Horiz. Slide
	Casement
	Double Glass
	Patio Doors
X	Storms & Screens

(3) Roof

X	Gable Hip Flat		Gambrel Mansard Shed

X	Asphalt Shingle

Chimney:

(3) Roof (cont.)

	Eavestrough
X	Insulation
0	Front Overhang
0	Other Overhang

(4) Interior

X	Drywall Paneled		Plaster Wood T&G

Trim & Decoration

	Ex	X	Ord		Min

Size of Closets

	Lg	X	Ord		Small

Doors:		Solid	X	H.C.	

(5) Floors

Kitchen:
Other: Linoleum
Other: Carpeted

(6) Ceilings

X	Drywall

(7) Excavation

Basement: 960 S.F.
Crawl: 336 S.F.
Slab: 0 S.F.
Height to Joists: 0.0

(8) Basement

	Conc. Block
	Poured Conc.
	Stone
	Treated Wood
	Concrete Floor

(9) Basement Finish

	Recreation SF
	Living SF
	Walkout Doors (B)
	No Floor SF
	Walkout Doors (A)

(10) Floor Support

Joists:
Unsupported Len:
Cntr.Sup:

(11) Heating/Cooling

X	Gas Wood		Oil Coal		Elec. Steam	

	Forced Air w/o Ducts
X	Forced Air w/ Ducts
	Forced Hot Water
	Electric Baseboard
	Elec. Ceil. Radiant
	Radiant (in-floor)
	Electric Wall Heat
	Space Heater
	Wall/Floor Furnace
	Forced Heat & Cool
	Heat Pump
	No Heating/Cooling

	Central Air
	Wood Furnace

(12) Electric

150	Amps Service

No./Qual. of Fixtures

	Ex.	X	Ord.		Min

No. of Elec. Outlets

	Many	X	Ave.		Few

(13) Plumbing

1	Average Fixture(s)
	3 Fixture Bath
	2 Fixture Bath
	Softener, Auto
	Softener, Manual
	Solar Water Heat
	No Plumbing
	Extra Toilet
	Extra Sink
	Separate Shower
	Ceramic Tile Floor
	Ceramic Tile Wains
	Ceramic Tub Alcove
	Vent Fan

(14) Water/Sewer

	Public Water
	Public Sewer
1	Water Well
1	1000 Gal Septic
	2000 Gal Septic

Lump Sum Items:

(15) Built-ins

	Appliance Allow.
	Cook Top
	Dishwasher
	Garbage Disposal
	Bath Heater
	Vent Fan
	Hot Tub
	Unvented Hood
	Vented Hood
	Intercom
	Jacuzzi Tub
	Jacuzzi repl.Tub
	Oven
	Microwave
	Standard Range
	Self Clean Range
	Sauna
	Trash Compactor
	Central Vacuum
	Security System

(15) Fireplaces

	Interior 1 Story
	Interior 2 Story
	2nd/Same Stack
	Two Sided
	Exterior 1 Story
	Exterior 2 Story
	Prefab 1 Story
	Prefab 2 Story
	Heat Circulator
	Raised Hearth
	Wood Stove
	Direct-Vented Gas

Class: CD
Effec. Age: 49
Floor Area: 1,296
Total Base New : 226,100 E.C.F.
Total Depr Cost: 115,311 X 1.297
Estimated T.C.V: 149,558

(16) Porches/Decks

Area	Type
320	WCP (1 Story)
63	Treated Wood
144	Brzwy, FW

(17) Garage

Year Built:
Car Capacity:
Class: CD
Exterior: Siding
Brick Ven.: 0
Stone Ven.: 0
Common Wall: 1.5 Wal
Foundation: 42 Inch
Finished ?:
Auto. Doors: 0
Mech. Doors: 0
Area: 896
% Good: 0
Storage Area: 0
No Conc. Floor: 0

Bsmnt Garage:

Carport Area:
Roof:

Cost Est. for Res. Bldg: 1 Single Family RANCH Cls CD Blt 0
(11) Heating System: Forced Air w/ Ducts
Ground Area = 1296 SF Floor Area = 1296 SF.
Phy/Ab.Phy/Func/Econ/Comb. % Good=51/100/100/100/51
Building Areas

Stories	Exterior	Foundation	Size	Cost New	Depr. Cost
1 Story	Siding	Basement	960		
1 Story	Siding	Crawl Space	336		
			Total:	165,385	84,346
Other Additions/Adjustments					
Water/Sewer					
1000 Gal Septic			1	4,582	2,337
Water Well, 100 Feet			1	5,680	2,897
Porches					
WCP (1 Story)			320	9,424	4,806
Deck					
Treated Wood			63	1,978	1,009
Garages					
Class: CD Exterior: Siding Foundation: 42 Inch (Unfinished)					
Base Cost			896	30,787	15,701
Common Wall: 1.5 Wall			1	-3,791	-1,933
Breezeways					
Frame Wall			144	8,695	4,434
Local Cost Items					
POLE LEAN TO			640	3,360	1,714
			Totals:	226,100	115,311

Notes:

ECF (RESIDENTIAL) 1.297 => TCV: 149,558

*** Information herein deemed reliable but not guaranteed***

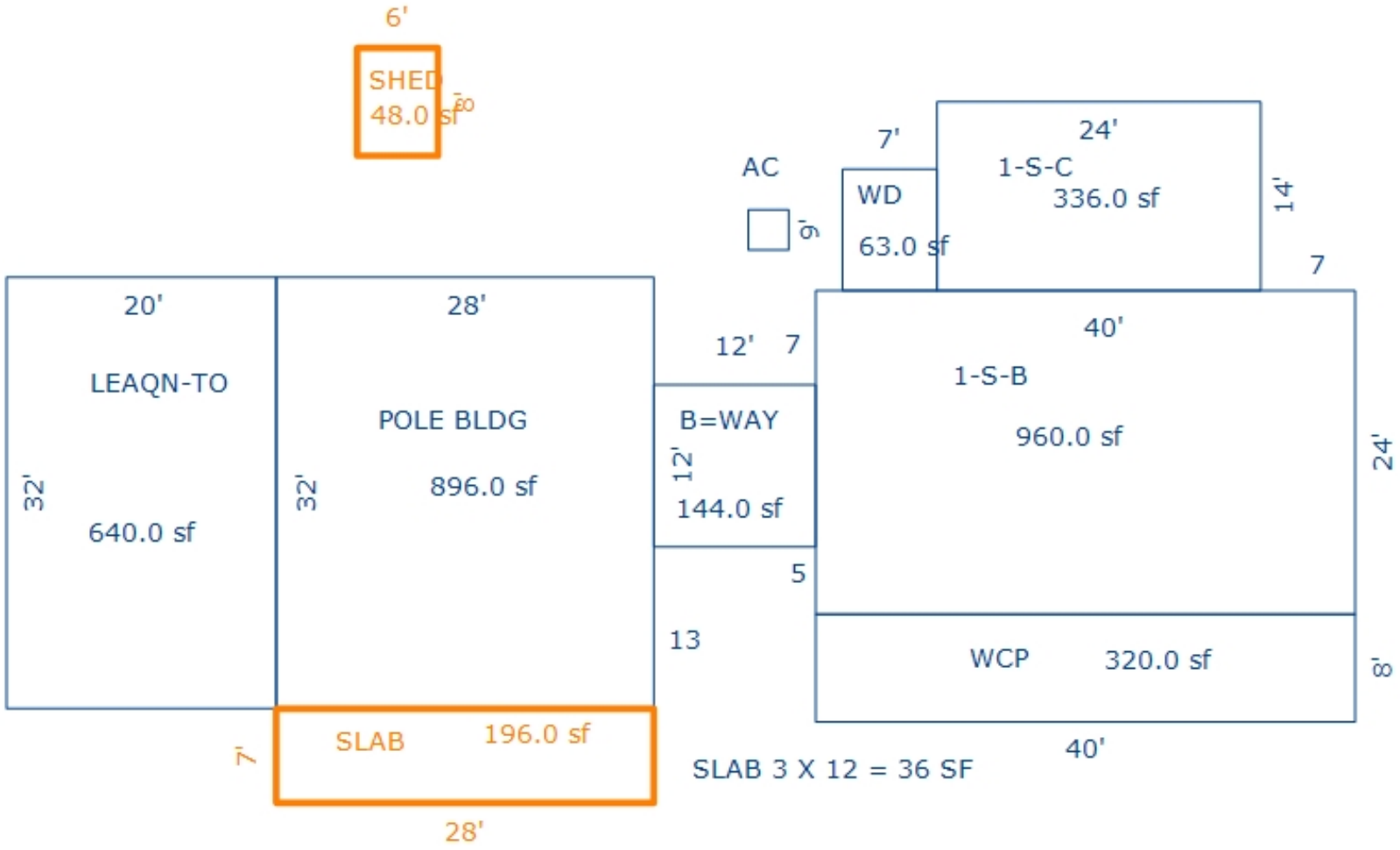

*** Information herein deemed reliable but not guaranteed***

Parcel Number: 2410-23-3302-02 Jurisdiction: GREENWOOD TWP County: WEXFORD Printed on 02/15/2024

Grantor	Grantee	Sale Price	Sale Date	Inst. Type	Terms of Sale	Liber & Page	Verified By	Prcnt. Trans.
SWINEHART, FREDA	SWINEHART, HAROLD	0	03/18/2022	QC	08-ESTATE	692/1467	DEED	0.0
SWINEHART, HAROLD & REO	SWINEHART, HAROLD	1	12/21/2021	QC	21-NOT USED/OTHER	691/2373	DEED	0.0
SWINEHART, REO L.(PR KAYCE	SWINEHART, FREDA	0	05/17/2021	WD	06-COURT JUDGEMENT	690/466	AGENT	0.0
SWINEHART, REO L.	SWINEHART, HAROLD P & REO	0	03/25/2009	QC	09-FAMILY	619/756	DEED	0.0

Property Address

4055 E 10 RD

Owner's Name/Address

SWINEHART, HAROLD
4055 E 10 RD
MANTON MI 49663

Tax Description

COM AT SW COR OF SEC E 210 FT TO POB: E 180 FT; N 242 FT; W 180 FT; S TO POB - 1 A M/L-- GW. SEC. 23 T24N R10W -MANTON-SPLIT ON 05/14/2009 FROM 2410-23-3302;

Comments/Influences

Split/Comb. on 05/14/2009 completed / / DEB OWNER REQUEST ;
Parent Parcel(s): 2410-23-3302;
Child Parcel(s): 2410-23-3302-01, 2410-23-3302-02, 2410-23-3302-03;

The Equalizer. Copyright (c) 1999 - 2009. Licensed To: Township of Greenwood, County of Wexford, Michigan

Class: RESIDENTIAL-IMPROV Zoning:
School: MANTON CONSOLIDATED SCHOOLS
P.R.E. 100% 06/15/2022
:
2024 Est TCV 37,877 TCV/TFA: 40.99

Building Permit(s)	Date	Number	Status
Res. Add/Alter/Repair	09/19/2011	PM11-11536	
Manufactured home	02/22/2011	PP11-5057	
Manufactured home	10/14/2010	PM10-11149	
Manufactured home	06/21/2010	PE10-18757	

X Improved | Vacant

Public Improvements

- Dirt Road
- X Gravel Road
- Paved Road
- Storm Sewer
- Sidewalk
- Water
- Sewer
- X Electric
- Gas
- Curb
- Street Lights
- Standard Utilities
- Underground Utils.

Topography of Site

- X Level
- Rolling
- Low
- High
- Landscaped
- Swamp
- Wooded
- Pond
- Waterfront
- Ravine
- Wetland
- Flood Plain
- X OPEN

Who When What
GLA 05/30/2017 INSPECTION

Land Value Estimates for Land Table 4010.LAND VALUES

Description	Frontage	Depth	* Factors * Front	Depth	Rate	%Adj.	Reason	Value
ACREAGE			0.870 Acres		10,953	100		9,529
ROW			0.130 Acres		0	100		0
			1.00 Total Acres		Total Est. Land Value =			9,529

Land Improvement Cost Estimates

Description	Rate	Size	% Good	Cash Value
Wood Frame	35.15	25	25	220
Total Estimated Land Improvements True Cash Value =				220

Year	Land Value	Building Value	Assessed Value	Board of Review	Tribunal/ Other	Taxable Value
2024	4,800	14,100	18,900			10,236C
2023	2,600	11,400	14,000			9,749C
2022	2,200	9,500	11,700		11,700W	9,285C
2021	2,600	8,200	10,800			8,989C

*** Information herein deemed reliable but not guaranteed***

Building Type

	Single Family
X	Mobile Home
	Town Home
	Duplex
	A-Frame

X	Wood Frame

Building Style: SWT/DWT

Yr Built	Remodeled
0	0

Condition: Good

Room List

	Basement
	1st Floor
	2nd Floor
	Bedrooms

(1) Exterior

	Wood/Shingle
X	Aluminum/Vinyl
	Brick
X	Insulation

(2) Windows

	Many		Large
X	Avg.	X	Avg.
	Few		Small

	Wood Sash
	Metal Sash
X	Vinyl Sash
	Double Hung
	Horiz. Slide
	Casement
	Double Glass
	Patio Doors
X	Storms & Screens

(3) Roof

X	Gable		Gambrel
	Hip		Mansard
	Flat		Shed

X	Asphalt Shingle

Chimney:

(3) Roof (cont.)

	Eavestrough
X	Insulation
0	Front Overhang
0	Other Overhang

(4) Interior

X	Drywall		Plaster
	Paneled		Wood T&G

Trim & Decoration

	Ex	X	Ord		Min

Size of Closets

	Lg	X	Ord		Small

Doors:		Solid	X	H.C.	

(5) Floors

Kitchen:
Other: Linoleum
Other: Carpeted

(6) Ceilings

X	Drywall		

(7) Excavation

Basement: 0 S.F.
Crawl: 0 S.F.
Slab: 0 S.F.
Height to Joists: 0.0

(8) Basement

	Conc. Block
	Poured Conc.
	Stone
	Treated Wood
	Concrete Floor

(9) Basement Finish

	Recreation SF
	Living SF
	Walkout Doors (B)
	No Floor SF
	Walkout Doors (A)

(10) Floor Support

Joists:
Unsupported Len:
Cntr.Sup:

(11) Heating/Cooling

X	Gas		Oil		Elec.
	Wood		Coal		Steam

X	Forced Warm Air
	Wall Furnace
	Warm & Cool Air
	Heat Pump

	Central Air
	Wood Furnace

(12) Electric

150	Amps Service

No./Qual. of Fixtures

	Ex.	X	Ord.		Min

No. of Elec. Outlets

	Many	X	Ave.		Few

(13) Plumbing

	Average Fixture(s)
1	3 Fixture Bath
	2 Fixture Bath
	Softener, Auto
	Softener, Manual
	Solar Water Heat
	No Plumbing
	Extra Toilet
	Extra Sink
	Separate Shower
	Ceramic Tile Floor
	Ceramic Tile Wains
	Ceramic Tub Alcove
	Vent Fan

(14) Water/Sewer

	Public Water
	Public Sewer
1	Water Well
1	1000 Gal Septic
	2000 Gal Septic

Lump Sum Items:

(15) Built-ins

	Appliance Allow.
	Cook Top
	Dishwasher
	Garbage Disposal
	Bath Heater
	Vent Fan
	Hot Tub
	Unvented Hood
	Vented Hood
	Intercom
	Jacuzzi Tub
	Jacuzzi repl.Tub
	Oven
	Microwave
	Standard Range
	Self Clean Range
	Sauna
	Trash Compactor
	Central Vacuum
	Security System

(15) Fireplaces

	Interior 1 Story
	Interior 2 Story
	2nd/Same Stack
	Two Sided
	Exterior 1 Story
	Exterior 2 Story
	Prefab 1 Story
	Prefab 2 Story
	Heat Circulator
	Raised Hearth
	Wood Stove
	Direct-Vented Gas

Class: Fair
Effec. Age: 25
Floor Area:
Total Base New : 62,981 E.C.F.
Total Depr Cost: 21,687 X 1.297
Estimated T.C.V: 28,128

(16) Porches/Decks

Area	Type
40	WPP

(17) Garage

Year Built:
Car Capacity:
Class:
Exterior:
Brick Ven.:
Stone Ven.:
Common Wall:
Foundation:
Finished ?:
Auto. Doors:
Mech. Doors:
Area:
% Good:
Storage Area:
No Conc. Floor:

Bsmnt Garage:

Carport Area:
Roof:

Cost Est. for Res. Bldg: 1 Mobile Home SWT/DWT Cls Fair Blt 0
(11) Heating System: Wall Furnace
Ground Area = 924 SF Floor Area = 924 SF.
Phy/Ab.Phy/Func/Econ/Comb. % Good=35/100/100/100/35
Building Areas

Type	Ext. Walls	Roof/Fnd.	Size	Cost New	Depr. Cost	
Main Home	Ribbed	Metal	924			
			Total:	47,507	16,628	
Other Additions/Adjustments						
Skirting, Metal or Vinyl, Vertical			160	1,784	624	
Water/Sewer						
1000 Gal Septic			1	4,582	1,604	
Water Well, 100 Feet			1	5,680	1,988	
Porches						
WPP			40	1,735	607	
Local Cost Items						
SHED			25	195	86	*4
SHED #2			192	1,498	150	*1
			Totals:	62,981	21,687	

Notes:
ECF (RESIDENTIAL) 1.297 => TCV: 28,128

*** Information herein deemed reliable but not guaranteed***

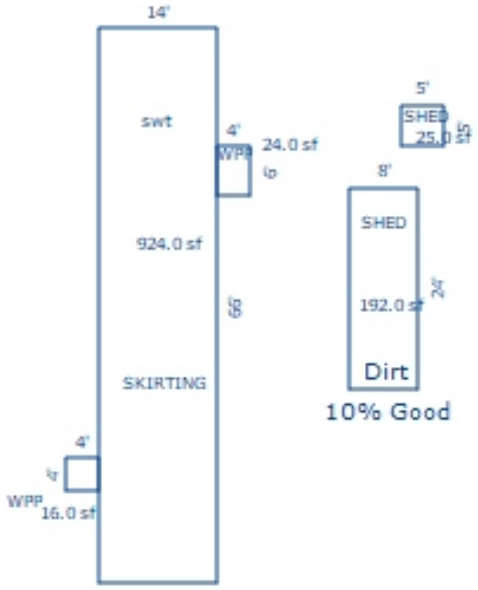

Sketch by Apex Sketch

*** Information herein deemed reliable but not guaranteed***

Parcel Number: 2410-23-3302-03 Jurisdiction: GREENWOOD TWP County: WEXFORD Printed on 02/15/2024

Grantor	Grantee	Sale Price	Sale Date	Inst. Type	Terms of Sale	Liber & Page	Verified By	Prcnt. Trans.
SWINEHART, FREDA	JONAS, RONDA	0	03/18/2022	OTH	09-FAMILY	692/1466	DEED	0.0
SWINEHART, REO L.(PR KAYCE	SWINEHART, FREDA	0	05/17/2021	WD	06-COURT JUDGEMENT	690/466	AGENT	0.0
SWINEHART, REO L JR	SWINEHART, REO L	0	06/25/2012	QC	09-FAMILY	649/939	DEED	0.0
SWINEHART, REO L.	SWINEHART, REO L JR & REO	0	03/25/2009	QC	09-FAMILY	619/757	DEED	0.0

Property Address

Owner's Name/Address

JONAS, RONDA
8112 N 33 RD
MANTON MI 49663

Tax Description

COM AT SW COR OF SEC; N 210 FT TO POB: E 210 FT;; N 210 FT; W 210 FT; S TO POB. --1.01 A M/L-- GW. SEC. 23 T24N R10W -MANTON- SPLIT ON 05/14/2009 FROM 2410-23-3302;

Comments/Influences

Split/Comb. on 05/14/2009 completed / / DEB OWNER REQUEST ;
Parent Parcel(s): 2410-23-3302;
Child Parcel(s): 2410-23-3302-01, 2410-23-3302-02, 2410-23-3302-03;

The Equalizer. Copyright (c) 1999 - 2009. Licensed To: Township of Greenwood, County of Wexford, Michigan

Class: RESIDENTIAL-VACANT Zoning:
School: MANTON CONSOLIDATED SCHOOLS
P.R.E. 0%
:
2024 Est TCV 9,310

Building Permit(s)	Date	Number	Status

	Improved	X	Vacant

	Public Improvements
	Dirt Road
	Gravel Road
X	Paved Road
	Storm Sewer
	Sidewalk
	Water
	Sewer
X	Electric
	Gas
	Curb
	Street Lights
	Standard Utilities
	Underground Utils.

	Topography of Site
X	Level
	Rolling
	Low
	High
	Landscaped
	Swamp
	Wooded
	Pond
	Waterfront
	Ravine
	Wetland
	Flood Plain
X	OPEN

Who	When	What
GLA	05/30/2017	INSPECTION

Land Value Estimates for Land Table 4010.LAND VALUES

Description	Frontage	Depth	* Factors * Front	Depth	Rate	%Adj.	Reason	Value
ACREAGE			0.850 Acres		10,953	100		9,310
ROW			0.160 Acres		0	100		0
			1.01 Total Acres		Total Est. Land Value =			9,310

Year	Land Value	Building Value	Assessed Value	Board of Review	Tribunal/ Other	Taxable Value
2024	4,700	0	4,700			2,154C
2023	2,600	0	2,600			2,052C
2022	2,100	0	2,100			1,955C
2021	2,600	0	2,600			1,893C

*** Information herein deemed reliable but not guaranteed***

Parcel Number: 2410-23-3303 Jurisdiction: GREENWOOD TWP County: WEXFORD Printed on 02/15/2024

Grantor	Grantee	Sale Price	Sale Date	Inst. Type	Terms of Sale	Liber & Page	Verified By	Prcnt. Trans.
KILBOURN, LEON CCONNIE DYE	BIGELOW, SHELLY	10,000	03/11/2019	QC	21-NOT USED/OTHER	685 / 89	DEED	100.0
KILBOURN, LEON C	KILBOURN, LEON C & CONNIE	0	08/13/2014	QC	09-FAMILY	670/1008	DEED	0.0
SWINEHART, DALLAS & MAXINE	KILBOURN, LEON C	15,000	10/13/2005	WD	03-ARM'S LENGTH	579:1313	DEED	0.0

Property Address

4241 E 10 RD

Owner's Name/Address

BIGELOW, SHELLY
8202 N 33 RD
MANTON MI 49663

Tax Description

E 180 FT OF S 23/40THS OF SW 1/4 OF SW 1/4 --3.13 A M/L-- GW. SEC. 23 T24N R10W -MANTON-

Comments/Influences

The Equalizer. Copyright (c) 1999 - 2009. Licensed To: Township of Greenwood, County of Wexford, Michigan

Class: RESIDENTIAL-IMPROV Zoning:

School: MANTON CONSOLIDATED SCHOOLS

P.R.E. 100% 05/17/2019

:

2024 Est TCV 54,149 TCV/TFA: 260.33

Building Permit(s)	Date	Number	Status

X Improved | Vacant

	Public Improvements
	Dirt Road
	Gravel Road
X	Paved Road
	Storm Sewer
	Sidewalk
	Water
	Sewer
X	Electric
	Gas
	Curb
	Street Lights
	Standard Utilities
	Underground Utils.

	Topography of Site
	Level
X	Rolling
X	Low
	High
	Landscaped
	Swamp
X	Wooded
	Pond
	Waterfront
	Ravine
	Wetland
	Flood Plain
X	OPEN

Who	When	What
GLA	05/30/2017	INSPECTION

Land Value Estimates for Land Table 4010.LAND VALUES

Description	Frontage	Depth	* Factors * Front	Depth	Rate	%Adj.	Reason	Value
ACREAGE			3.000 Acres		5,546	100		16,638
ROW			0.130 Acres		0	100		0
			3.13 Total Acres		Total Est. Land Value =			16,638

Year	Land Value	Building Value	Assessed Value	Board of Review	Tribunal/ Other	Taxable Value
2024	8,300	18,800	27,100			18,360C
2023	7,100	15,100	22,200			17,486C
2022	6,500	12,800	19,300			16,654C
2021	6,300	11,000	17,300			16,122C

*** Information herein deemed reliable but not guaranteed***

Building Type

	Single Family
X	Mobile Home
	Town Home
	Duplex
	A-Frame

X	Wood Frame

Building Style: SWT/DWT

Yr Built	Remodeled
0	0

Condition: Good

Room List

	Basement
	1st Floor
	2nd Floor
	Bedrooms

(1) Exterior

	Wood/Shingle
X	Aluminum/Vinyl
	Brick
X	Insulation

(2) Windows

	Many		Large
X	Avg.	X	Avg.
	Few		Small

	Wood Sash
	Metal Sash
X	Vinyl Sash
	Double Hung
	Horiz. Slide
	Casement
	Double Glass
	Patio Doors
X	Storms & Screens

(3) Roof

X	Gable		Gambrel
	Hip		Mansard
	Flat		Shed

X	Asphalt Shingle

Chimney:

(3) Roof (cont.)

	Eavestrough
X	Insulation
0	Front Overhang
0	Other Overhang

(4) Interior

X	Drywall		Plaster
	Paneled		Wood T&G

Trim & Decoration

	Ex	X	Ord		Min

Size of Closets

	Lg	X	Ord		Small

Doors:		Solid	X	H.C.	

(5) Floors

Kitchen:
Other: Linoleum
Other: Carpeted

(6) Ceilings

X	Drywall

(7) Excavation

Basement: 0 S.F.
Crawl: 0 S.F.
Slab: 0 S.F.
Height to Joists: 0.0

(8) Basement

	Conc. Block
	Poured Conc.
	Stone
	Treated Wood
	Concrete Floor

(9) Basement Finish

	Recreation SF
	Living SF
	Walkout Doors (B)
	No Floor SF
	Walkout Doors (A)

(10) Floor Support

Joists:
Unsupported Len:
Cntr.Sup:

(11) Heating/Cooling

X	Gas		Oil		Elec.
	Wood		Coal		Steam

X	Forced Warm Air
	Wall Furnace
	Warm & Cool Air
	Heat Pump

	Central Air
	Wood Furnace

(12) Electric

150	Amps Service

No./Qual. of Fixtures

	Ex.	X	Ord.		Min

No. of Elec. Outlets

	Many	X	Ave.		Few

(13) Plumbing

	Average Fixture(s)
1	3 Fixture Bath
	2 Fixture Bath
	Softener, Auto
	Softener, Manual
	Solar Water Heat
	No Plumbing
	Extra Toilet
	Extra Sink
	Separate Shower
	Ceramic Tile Floor
	Ceramic Tile Wains
	Ceramic Tub Alcove
	Vent Fan

(14) Water/Sewer

	Public Water
	Public Sewer
1	Water Well
1	1000 Gal Septic
	2000 Gal Septic

Lump Sum Items:

(15) Built-ins

	Appliance Allow.
	Cook Top
	Dishwasher
	Garbage Disposal
	Bath Heater
	Vent Fan
	Hot Tub
	Unvented Hood
	Vented Hood
	Intercom
	Jacuzzi Tub
	Jacuzzi repl.Tub
	Oven
	Microwave
	Standard Range
	Self Clean Range
	Sauna
	Trash Compactor
	Central Vacuum
	Security System

(15) Fireplaces

	Interior 1 Story
	Interior 2 Story
	2nd/Same Stack
	Two Sided
	Exterior 1 Story
	Exterior 2 Story
	Prefab 1 Story
	Prefab 2 Story
	Heat Circulator
	Raised Hearth
	Wood Stove
	Direct-Vented Gas

Class: Fair
Effec. Age: 20
Floor Area:
Total Base New : 35,788 E.C.F.
Total Depr Cost: 17,456 X 1.297
Estimated T.C.V: 22,640

(16) Porches/Decks

Area	Type
16	WPP
72	4in Concrete

(17) Garage

Year Built:
Car Capacity:
Class: D
Exterior: Siding
Brick Ven.: 0
Stone Ven.: 0
Common Wall: Detache
Foundation: 18 Inch
Finished ?:
Auto. Doors: 0
Mech. Doors: 0
Area: 384
% Good: 0
Storage Area: 0
No Conc. Floor: 0

Bsmnt Garage:

Carport Area: 648
Roof: Aluminum

Cost Est. for Res. Bldg: 1 Mobile Home SWT/DWT Cls Fair Blt 0
(11) Heating System: Wall Furnace
Ground Area = 0 SF Floor Area = 0 SF.
Phy/Ab.Phy/Func/Econ/Comb. % Good=46/100/100/100/46
Building Areas

Type	Ext. Walls	Roof/Fnd.	Size	Cost New	Depr. Cost	
Other Additions/Adjustments						
Water/Sewer						
1000 Gal Septic			1	4,582	2,108	
Water Well, 100 Feet			1	5,680	2,613	
Garages						
Class: D Exterior: Siding Foundation: 18 Inch (Unfinished)						
Base Cost			384	12,960	5,962	
Porches						
WPP			16	805	370	
4in Concrete			72	533	245	
Carports						
Aluminum			648	8,761	4,030	
Local Cost Items						
SHED			49	382	168	*4
FREE STANDING ROOF			288	2,085	1,960	*9
			Totals:	35,788	17,456	

Notes:
ECF (RESIDENTIAL) 1.297 => TCV: 22,640

*** Information herein deemed reliable but not guaranteed***

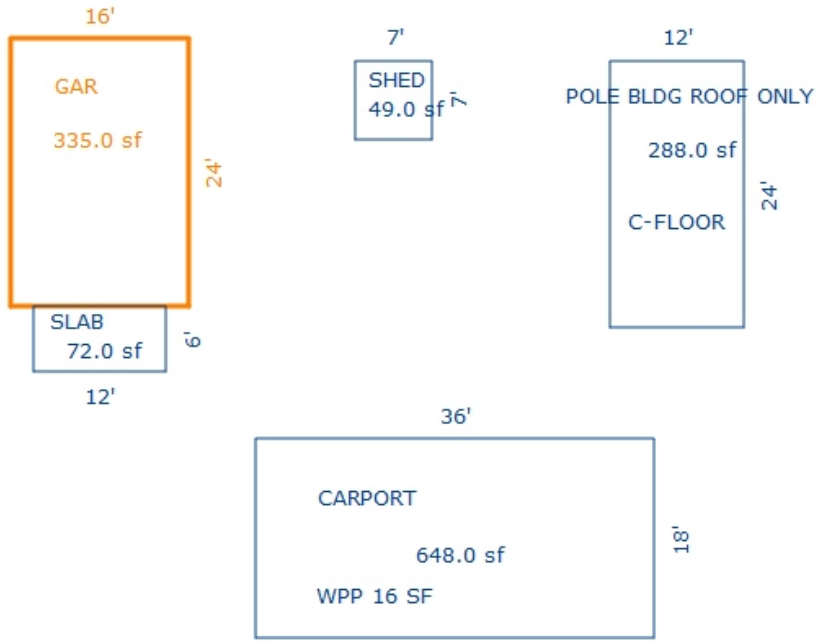

Sketch by Apex Sketch

*** Information herein deemed reliable but not guaranteed***

Building Type

	Single Family
X	Mobile Home
	Town Home
	Duplex
	A-Frame

X	Wood Frame

Building Style: SWT/DWT

Yr Built	Remodeled
0	0

Condition: Fair

Room List

	Basement
	1st Floor
	2nd Floor
	Bedrooms

(1) Exterior

	Wood/Shingle
X	Aluminum/Vinyl
	Brick
X	Insulation

(2) Windows

	Many		Large
X	Avg.	X	Avg.
	Few		Small

	Wood Sash
	Metal Sash
X	Vinyl Sash
	Double Hung
	Horiz. Slide
	Casement
	Double Glass
	Patio Doors
X	Storms & Screens

(3) Roof

X	Gable		Gambrel
	Hip		Mansard
	Flat		Shed

X	Asphalt Shingle

Chimney:

(3) Roof (cont.)

	Eavestrough
X	Insulation
0	Front Overhang
0	Other Overhang

(4) Interior

X	Drywall		Plaster
	Paneled		Wood T&G

Trim & Decoration

	Ex	X	Ord		Min

Size of Closets

	Lg	X	Ord		Small

Doors:		Solid	X	H.C.	

(5) Floors

Kitchen:
Other: Linoleum
Other: Carpeted

(6) Ceilings

X	Drywall		

(7) Excavation

Basement: 0 S.F.
Crawl: 0 S.F.
Slab: 0 S.F.
Height to Joists: 0.0

(8) Basement

	Conc. Block
	Poured Conc.
	Stone
	Treated Wood
	Concrete Floor

(9) Basement Finish

	Recreation SF
	Living SF
	Walkout Doors (B)
	No Floor SF
	Walkout Doors (A)

(10) Floor Support

Joists:
Unsupported Len:
Cntr.Sup:

(11) Heating/Cooling

X	Gas		Oil		Elec.
	Wood		Coal		Steam

X	Forced Warm Air
	Wall Furnace
	Warm & Cool Air
	Heat Pump

	Central Air
	Wood Furnace

(12) Electric

150	Amps Service

No./Qual. of Fixtures

	Ex.	X	Ord.		Min

No. of Elec. Outlets

	Many	X	Ave.		Few

(13) Plumbing

	Average Fixture(s)
1	3 Fixture Bath
	2 Fixture Bath
	Softener, Auto
	Softener, Manual
	Solar Water Heat
	No Plumbing
	Extra Toilet
	Extra Sink
	Separate Shower
	Ceramic Tile Floor
	Ceramic Tile Wains
	Ceramic Tub Alcove
	Vent Fan

(14) Water/Sewer

	Public Water
	Public Sewer
1	Water Well
1	1000 Gal Septic
	2000 Gal Septic

Lump Sum Items:

(15) Built-ins

	Appliance Allow.
	Cook Top
	Dishwasher
	Garbage Disposal
	Bath Heater
	Vent Fan
	Hot Tub
	Unvented Hood
	Vented Hood
	Intercom
	Jacuzzi Tub
	Jacuzzi repl.Tub
	Oven
	Microwave
	Standard Range
	Self Clean Range
	Sauna
	Trash Compactor
	Central Vacuum
	Security System

(15) Fireplaces

	Interior 1 Story
	Interior 2 Story
	2nd/Same Stack
	Two Sided
	Exterior 1 Story
	Exterior 2 Story
	Prefab 1 Story
	Prefab 2 Story
	Heat Circulator
	Raised Hearth
	Wood Stove
	Direct-Vented Gas

Class: Low
Effec. Age: 22
Floor Area:
Total Base New : 27,963 E.C.F.
Total Depr Cost: 11,466 X 1.297
Estimated T.C.V: 14,871

(16) Porches/Decks

Area	Type

(17) Garage

Year Built:
Car Capacity:
Class:
Exterior:
Brick Ven.:
Stone Ven.:
Common Wall:
Foundation:
Finished ?:
Auto. Doors:
Mech. Doors:
Area:
% Good:
Storage Area:
No Conc. Floor:

Bsmnt Garage:

Carport Area:
Roof:

Cost Est. for Res. Bldg: 2 Mobile Home SWT/DWT Cls Low Blt 0
(11) Heating System: Wall Furnace
Ground Area = 208 SF Floor Area = 208 SF.
Phy/Ab.Phy/Func/Econ/Comb. % Good=41/100/100/100/41
Building Areas

Type	Ext. Walls	Roof/Fnd.	Size	Cost New	Depr. Cost
Main Home	Ribbed	Metal	208		
			Total:	15,488	6,351
Other Additions/Adjustments					
Water/Sewer					
1000 Gal Septic			1	4,293	1,760
Water Well, 150 Feet			1	8,182	3,355
			Totals:	27,963	11,466

Notes:
ECF (RESIDENTIAL) 1.297 => TCV: 14,871

*** Information herein deemed reliable but not guaranteed***

Parcel Number: 2410-23-3304 Jurisdiction: GREENWOOD TWP County: WEXFORD Printed on 02/15/2024

Grantor	Grantee	Sale Price	Sale Date	Inst. Type	Terms of Sale	Liber & Page	Verified By	Prcnt. Trans.

Property Address

8340 N 33 RD

Owner's Name/Address

SWINEHART, REX
8340 N 33 RD
MANTON MI 49663

Tax Description

N 150 FT OF W 290.2 FT OF N 17/40THS OF SW 1/4 OF SW 1/4 1 A. M/L GW. SEC. 23 T24N R10W -MANTON-

Comments/Influences

Class: RESIDENTIAL-IMPROV Zoning:

School: MANTON CONSOLIDATED SCHOOLS

P.R.E. 100% / /

:

2024 Est TCV 188,378 TCV/TFA: 147.17

Building Permit(s)	Date	Number	Status
Res. Add/Alter/Repair	02/22/2010	PB10-0011	
Electrical	02/22/2010	PE10-18668	
RESIDENTIAL - REMODEL	09/19/2005	PB12929	

X Improved | Vacant

	Public Improvements
	Dirt Road
	Gravel Road
X	Paved Road
	Storm Sewer
	Sidewalk
	Water
	Sewer
X	Electric
	Gas
	Curb
	Street Lights
	Standard Utilities
	Underground Utils.

	Topography of Site
	Level
X	Rolling
	Low
	High
	Landscaped
	Swamp
X	Wooded
	Pond
	Waterfront
	Ravine
	Wetland
	Flood Plain
X	PINES/OPEN

Who	When	What
GLA	05/30/2017	INSPECTION

Land Value Estimates for Land Table 4010.LAND VALUES

Description	Frontage	Depth	* Factors * Front	Depth	Rate	%Adj.	Reason	Value
ACREAGE			0.890 Acres		10,953	100		9,748
ROW			0.110 Acres		0	100		0
			1.00 Total Acres		Total Est. Land Value =			9,748

Land Improvement Cost Estimates

Description	Rate	Size	% Good	Cash Value
D/W/P: 4in Concrete	7.01	552	45	1,741
Wood Frame	22.73	579	45	5,922
Total Estimated Land Improvements True Cash Value =				7,663

Year	Land Value	Building Value	Assessed Value	Board of Review	Tribunal/ Other	Taxable Value
2024	4,900	89,300	94,200			41,359C
2023	2,700	73,500	76,200			39,390C
2022	2,200	62,500	64,700			37,515C
2021	2,700	63,000	65,700			36,317C

The Equalizer. Copyright (c) 1999 - 2009. Licensed To: Township of Greenwood, County of Wexford, Michigan

*** Information herein deemed reliable but not guaranteed***

Building Type

X	Single Family
	Mobile Home
	Town Home
	Duplex
	A-Frame
X	Wood Frame

Building Style: PLAIN

Yr Built	Remodeled
1994	0

Condition: Good

Room List

	Basement
	1st Floor
	2nd Floor
	Bedrooms

(1) Exterior

	Wood/Shingle
X	Aluminum/Vinyl
	Brick
X	Insulation

(2) Windows

X	Many Avg. Few	X	Large Avg. Small

	Wood Sash
	Metal Sash
X	Vinyl Sash
	Double Hung
	Horiz. Slide
	Casement
	Double Glass
	Patio Doors
X	Storms & Screens

(3) Roof

X	Gable Hip Flat		Gambrel Mansard Shed
X	Asphalt Shingle		

Chimney:

(3) Roof (cont.)

	Eavestrough
X	Insulation
0	Front Overhang
0	Other Overhang

(4) Interior

X	Drywall Paneled		Plaster Wood T&G

Trim & Decoration

	Ex	X	Ord		Min

Size of Closets

	Lg	X	Ord		Small

Doors: | | Solid | X | H.C.

(5) Floors

Kitchen:
Other: Linoleum
Other: Carpeted

(6) Ceilings

X	Drywall

(7) Excavation

Basement: 960 S.F.
Crawl: 320 S.F.
Slab: 0 S.F.
Height to Joists: 0.0

(8) Basement

	Conc. Block
	Poured Conc.
	Stone
	Treated Wood
	Concrete Floor

(9) Basement Finish

	Recreation SF
	Living SF
	Walkout Doors (B)
	No Floor SF
	Walkout Doors (A)

(10) Floor Support

Joists:
Unsupported Len:
Cntr.Sup:

(11) Heating/Cooling

X	Gas Wood		Oil Coal		Elec. Steam

	Forced Air w/o Ducts
X	Forced Air w/ Ducts
	Forced Hot Water
	Electric Baseboard
	Elec. Ceil. Radiant
	Radiant (in-floor)
	Electric Wall Heat
	Space Heater
	Wall/Floor Furnace
	Forced Heat & Cool
	Heat Pump
	No Heating/Cooling

	Central Air
	Wood Furnace

(12) Electric

150	Amps Service

No./Qual. of Fixtures

	Ex.	X	Ord.		Min

No. of Elec. Outlets

	Many	X	Ave.		Few

(13) Plumbing

1	Average Fixture(s)
	3 Fixture Bath
	2 Fixture Bath
	Softener, Auto
	Softener, Manual
	Solar Water Heat
	No Plumbing
	Extra Toilet
	Extra Sink
	Separate Shower
	Ceramic Tile Floor
	Ceramic Tile Wains
	Ceramic Tub Alcove
	Vent Fan

(14) Water/Sewer

	Public Water
	Public Sewer
1	Water Well
1	1000 Gal Septic
	2000 Gal Septic

Lump Sum Items:
30

(15) Built-ins

	Appliance Allow.
	Cook Top
	Dishwasher
	Garbage Disposal
	Bath Heater
	Vent Fan
	Hot Tub
	Unvented Hood
	Vented Hood
	Intercom
	Jacuzzi Tub
	Jacuzzi repl.Tub
	Oven
	Microwave
	Standard Range
	Self Clean Range
	Sauna
	Trash Compactor
	Central Vacuum
	Security System

(15) Fireplaces

	Interior 1 Story
	Interior 2 Story
	2nd/Same Stack
	Two Sided
	Exterior 1 Story
	Exterior 2 Story
	Prefab 1 Story
	Prefab 2 Story
	Heat Circulator
	Raised Hearth
	Wood Stove
	Direct-Vented Gas

Class: CD
Effec. Age: 36
Floor Area: 1,280
Total Base New : 205,968 E.C.F.
Total Depr Cost: 131,818 X 1.297
Estimated T.C.V: 170,967

(16) Porches/Decks

Area	Type
28	WPP

(17) Garage

Year Built:
Car Capacity:
Class: CD
Exterior: Siding
Brick Ven.: 0
Stone Ven.: 0
Common Wall: 1 Wall
Foundation: 42 Inch
Finished ?:
Auto. Doors: 0
Mech. Doors: 0
Area: 624
% Good: 0
Storage Area: 0
No Conc. Floor: 0

Bsmnt Garage:

Carport Area:
Roof:

Cost Est. for Res. Bldg: 1 Single Family PLAIN Cls CD Blt 1994
(11) Heating System: Forced Air w/ Ducts
Ground Area = 1280 SF Floor Area = 1280 SF.
Phy/Ab.Phy/Func/Econ/Comb. % Good=64/100/100/100/64

Building Areas

Stories	Exterior	Foundation	Size	Cost New	Depr. Cost
1 Story	Siding	Basement	960		
1 Story	Siding	Crawl Space	320		
			Total:	163,814	104,840
Other Additions/Adjustments					
Water/Sewer					
1000 Gal Septic			1	4,582	2,932
Water Well, 100 Feet			1	5,680	3,635
Porches					
WPP			28	1,402	897
Garages					
Class: CD Exterior: Siding Foundation: 42 Inch (Unfinished)					
Base Cost			624	23,650	15,136
Common Wall: 1 Wall			1	-2,529	-1,619
Class: CD Exterior: Pole (Unfinished)					
Base Cost			400	11,604	7,427
No Concrete Floor			400	-2,460	-1,574
Lump Sum Items					
BASMT ENT				225	144
			Totals:	205,968	131,818

Notes:

ECF (RESIDENTIAL) 1.297 => TCV: 170,967

*** Information herein deemed reliable but not guaranteed***

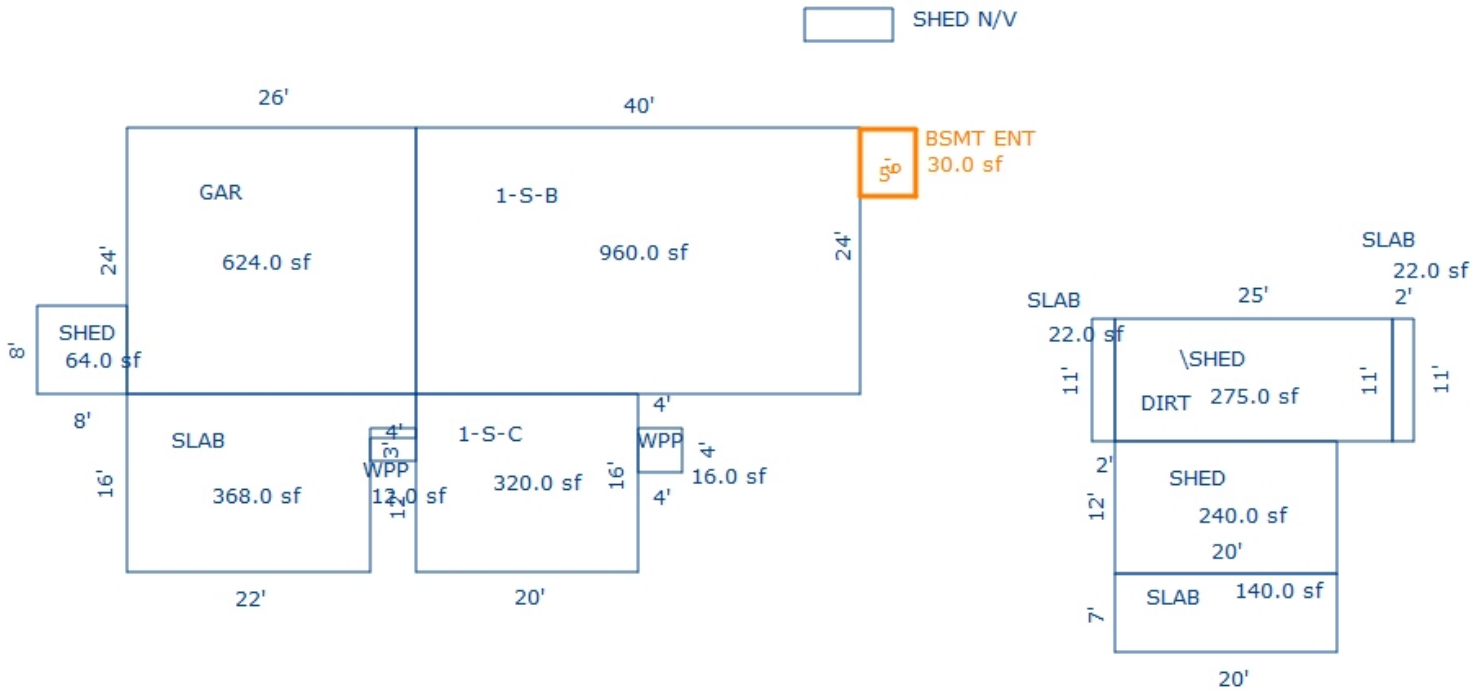

Sketch by Apex Sketch

*** Information herein deemed reliable but not guaranteed***

Parcel Number: 2410-23-3305 Jurisdiction: GREENWOOD TWP County: WEXFORD Printed on 02/15/2024

Grantor	Grantee	Sale Price	Sale Date	Inst. Type	Terms of Sale	Liber & Page	Verified By	Prcnt. Trans.

Property Address	Class: RESIDENTIAL-IMPROV	Zoning:	Building Permit(s)	Date	Number	Status
4023 E 10 RD	School: MANTON CONSOLIDATED SCHOOLS					
	P.R.E. 100% / /					
Owner's Name/Address	:					
KIMBEL, ROGER & JEAN 4023 E 10 RD MANTON MI 49663	2024 Est TCV 55,131 TCV/TFA: 59.67					

X Improved | | Vacant

Land Value Estimates for Land Table 4010.LAND VALUES

Description	Frontage	Depth	* Factors * Front	Depth	Rate	%Adj.	Reason	Value
ACREAGE			0.680 Acres		10,953	100		7,448
ROW			0.320 Acres		0	100		0
			1.00 Total Acres		Total Est. Land Value =			7,448

Public Improvements

- Dirt Road
- X Gravel Road
- X Paved Road
- Storm Sewer
- Sidewalk
- Water
- Sewer
- X Electric
- Gas
- Curb
- Street Lights
- Standard Utilities
- Underground Utils.

Topography of Site

- Level
- X Rolling
- Low
- High
- Landscaped
- Swamp
- X Wooded
- Pond
- Waterfront
- Ravine
- Wetland
- Flood Plain
- X PINES/OPEN

Tax Description

BEG AT SW COR OF SEC: N 210 FT; E 210 FT; S 210 FT; W 210 FT TO POB. -1.01 A M/L-GW. SEC. 23 T24N R10W -MANTON-

Comments/Influences

Year	Land Value	Building Value	Assessed Value	Board of Review	Tribunal/ Other	Taxable Value
2024	3,700	23,900	27,600			13,029C
2023	2,000	19,200	21,200			12,409C
2022	1,700	16,000	17,700			11,819C
2021	2,000	13,700	15,700			11,442C

Who When What

GLA 05/30/2017 INSPECTION

The Equalizer. Copyright (c) 1999 - 2009. Licensed To: Township of Greenwood, County of Wexford, Michigan

*** Information herein deemed reliable but not guaranteed***

Building Type

	Single Family
X	Mobile Home
	Town Home
	Duplex
	A-Frame

X	Wood Frame

Building Style: SWT/DWT

Yr Built	Remodeled
0	0

Condition: Good

Room List

	Basement
	1st Floor
	2nd Floor
	Bedrooms

(1) Exterior

	Wood/Shingle
	Aluminum/Vinyl
	Brick
X	Insulation

(2) Windows

	Many		Large
X	Avg.	X	Avg.
	Few		Small

	Wood Sash
	Metal Sash
X	Vinyl Sash
	Double Hung
	Horiz. Slide
	Casement
	Double Glass
	Patio Doors
X	Storms & Screens

(3) Roof

X	Gable		Gambrel
	Hip		Mansard
	Flat		Shed

X	Asphalt Shingle

Chimney:

(3) Roof (cont.)

	Eavestrough
X	Insulation
0	Front Overhang
0	Other Overhang

(4) Interior

X	Drywall		Plaster
	Paneled		Wood T&G

Trim & Decoration

	Ex	X	Ord		Min

Size of Closets

	Lg	X	Ord		Small

Doors:		Solid	X	H.C.	

(5) Floors

Kitchen:
Other: Linoleum
Other: Carpeted

(6) Ceilings

X	Drywall		

(7) Excavation

Basement: 0 S.F.
Crawl: 0 S.F.
Slab: 0 S.F.
Height to Joists: 0.0

(8) Basement

	Conc. Block
	Poured Conc.
	Stone
	Treated Wood
	Concrete Floor

(9) Basement Finish

	Recreation SF
	Living SF
	Walkout Doors (B)
	No Floor SF
	Walkout Doors (A)

(10) Floor Support

Joists:
Unsupported Len:
Cntr.Sup:

(11) Heating/Cooling

X	Gas		Oil		Elec.
	Wood		Coal		Steam

X	Forced Warm Air
	Wall Furnace
	Warm & Cool Air
	Heat Pump

	Central Air
	Wood Furnace

(12) Electric

150	Amps Service

No./Qual. of Fixtures

	Ex.	X	Ord.		Min

No. of Elec. Outlets

	Many	X	Ave.		Few

(13) Plumbing

	Average Fixture(s)
1	3 Fixture Bath
	2 Fixture Bath
	Softener, Auto
	Softener, Manual
	Solar Water Heat
	No Plumbing
	Extra Toilet
	Extra Sink
	Separate Shower
	Ceramic Tile Floor
	Ceramic Tile Wains
	Ceramic Tub Alcove
	Vent Fan

(14) Water/Sewer

	Public Water
	Public Sewer
1	Water Well
1	1000 Gal Septic
	2000 Gal Septic

Lump Sum Items:

(15) Built-ins

	Appliance Allow.
	Cook Top
	Dishwasher
	Garbage Disposal
	Bath Heater
	Vent Fan
	Hot Tub
	Unvented Hood
	Vented Hood
	Intercom
	Jacuzzi Tub
	Jacuzzi repl.Tub
	Oven
	Microwave
	Standard Range
	Self Clean Range
	Sauna
	Trash Compactor
	Central Vacuum
	Security System

(15) Fireplaces

	Interior 1 Story
	Interior 2 Story
	2nd/Same Stack
	Two Sided
	Exterior 1 Story
	Exterior 2 Story
	Prefab 1 Story
	Prefab 2 Story
	Heat Circulator
	Raised Hearth
	Wood Stove
	Direct-Vented Gas

Class: Fair
Effec. Age: 20
Floor Area:
Total Base New : 79,933 E.C.F.
Total Depr Cost: 36,764 X 1.297
Estimated T.C.V: 47,683

(16) Porches/Decks

Area	Type
113	WGEP (1 Story)

(17) Garage

Year Built:
Car Capacity:
Class: D
Exterior: Siding
Brick Ven.: 0
Stone Ven.: 0
Common Wall: Detache
Foundation: 42 Inch
Finished ?:
Auto. Doors: 0
Mech. Doors: 0
Area: 224
% Good: 0
Storage Area: 0
No Conc. Floor: 0

Bsmnt Garage:

Carport Area:
Roof:

Cost Est. for Res. Bldg: 1 Mobile Home SWT/DWT Cls Fair Blt 0
(11) Heating System: Forced Warm Air
Ground Area = 924 SF Floor Area = 924 SF.
Phy/Ab.Phy/Func/Econ/Comb. % Good=46/100/100/100/46
Building Areas

Type	Ext. Walls	Roof/Fnd.	Size	Cost New	Depr. Cost	
Main Home	Ribbed	Metal	924			
			Total:	49,835	22,923	
Other Additions/Adjustments						
Skirting, Metal or Vinyl, Vertical			160	1,784	821	
Water/Sewer						
1000 Gal Septic			1	4,582	2,108	
Water Well, 100 Feet			1	5,680	2,613	
Porches						
WGEP (1 Story)			113	7,605	3,498	
Garages						
Class: D Exterior: Siding Foundation: 42 Inch (Unfinished)						
Base Cost			224	10,210	4,697	
Local Cost Items						
POLE LEANTO DIRT			64	237	104	*4
			Totals:	79,933	36,764	

Notes:
ECF (RESIDENTIAL) 1.297 => TCV: 47,683

*** Information herein deemed reliable but not guaranteed***

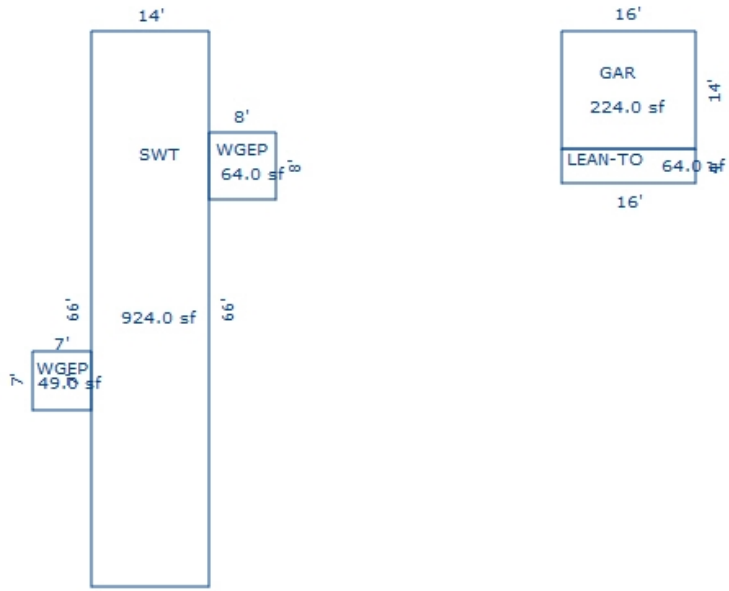

Sketch by Apex Sketch

*** Information herein deemed reliable but not guaranteed***

Parcel Number: 2410-23-3306 Jurisdiction: GREENWOOD TWP County: WEXFORD Printed on 02/15/2024

Grantor	Grantee	Sale Price	Sale Date	Inst. Type	Terms of Sale	Liber & Page	Verified By	Prcnt. Trans.

Property Address	Class: RESIDENTIAL-IMPROV	Zoning:	Building Permit(s)	Date	Number	Status
4149 E 10 RD	School: MANTON CONSOLIDATED SCHOOLS					
	P.R.E. 100% / /					
Owner's Name/Address	:					
MOHLER, GRANT & ROBERTA 4149 E 10 RD MANTON MI 49663	2024 Est TCV 254,591 TCV/TFA: 163.20					

X Improved | | Vacant

Land Value Estimates for Land Table 4010.LAND VALUES

Description	Frontage	Depth	* Factors * Front	Depth	Rate	%Adj.	Reason	Value
ACREAGE			6.940 Acres		5,112	100		35,477
ROW			0.310 Acres		0	100		0
			7.25 Total Acres		Total Est. Land Value =			35,477

Tax Description

PAR "A" COM AT SW COR OF SEC; E 683.82 FT TO POB: N 759.98 FT; E 416.24 FT; S 758.85 FT; W 416.28 FT TO POB. -7.25 A GW SEC 23 T24N R10W -MANTON- [[ASSESSED W/ 23-3302 '00

Comments/Influences

Public Improvements

- Dirt Road
- Gravel Road
- X Paved Road
- Storm Sewer
- Sidewalk
- Water
- Sewer
- X Electric
- Gas
- Curb
- Street Lights
- Standard Utilities
- Underground Utils.

Topography of Site

- X Level
- X Rolling
- Low
- High
- Landscaped
- Swamp
- Wooded
- Pond
- Waterfront
- Ravine
- Wetland
- Flood Plain
- X OPEN

Who	When	What
GLA	05/30/2017	INSPECTION

Year	Land Value	Building Value	Assessed Value	Board of Review	Tribunal/ Other	Taxable Value
2024	17,700	109,600	127,300			79,054C
2023	11,800	89,400	101,200			75,290C
2022	10,400	75,400	85,800			71,705C
2021	11,800	76,300	88,100			69,415C

The Equalizer. Copyright (c) 1999 - 2009. Licensed To: Township of Greenwood, County of Wexford, Michigan

*** Information herein deemed reliable but not guaranteed***

Building Type

X	Single Family
	Mobile Home
	Town Home
	Duplex
	A-Frame
X	Wood Frame

Building Style: PLAIN

Yr Built	Remodeled
0	0

Condition: Good

Room List

	Basement
	1st Floor
	2nd Floor
	Bedrooms

(1) Exterior

	Wood/Shingle
X	Aluminum/Vinyl
	Brick
X	Insulation

(2) Windows

X	Many Avg. Few	X	Large Avg. Small

	Wood Sash
	Metal Sash
X	Vinyl Sash
	Double Hung
	Horiz. Slide
	Casement
	Double Glass
	Patio Doors
X	Storms & Screens

(3) Roof

X	Gable		Gambrel
	Hip		Mansard
	Flat		Shed

X	Asphalt Shingle

Chimney:

(3) Roof (cont.)

	Eavestrough
X	Insulation
0	Front Overhang
0	Other Overhang

(4) Interior

X	Drywall Paneled		Plaster Wood T&G

Trim & Decoration

	Ex	X	Ord		Min

Size of Closets

	Lg	X	Ord		Small

Doors: | | Solid | X | H.C.

(5) Floors

Kitchen:
Other: Linoleum
Other: Carpeted

(6) Ceilings

X	Drywall		

(7) Excavation

Basement: 780 S.F.
Crawl: 0 S.F.
Slab: 0 S.F.
Height to Joists: 0.0

(8) Basement

	Conc. Block
	Poured Conc.
	Stone
	Treated Wood
	Concrete Floor

(9) Basement Finish

	Recreation SF
	Living SF
	Walkout Doors (B)
	No Floor SF
	Walkout Doors (A)

(10) Floor Support

Joists:
Unsupported Len:
Cntr.Sup:

(11) Heating/Cooling

X	Gas		Oil		Elec.
	Wood		Coal		Steam

	Forced Air w/o Ducts
X	Forced Air w/ Ducts
	Forced Hot Water
	Electric Baseboard
	Elec. Ceil. Radiant
	Radiant (in-floor)
	Electric Wall Heat
	Space Heater
	Wall/Floor Furnace
	Forced Heat & Cool
	Heat Pump
	No Heating/Cooling

	Central Air
	Wood Furnace

(12) Electric

150	Amps Service

No./Qual. of Fixtures

	Ex.	X	Ord.		Min

No. of Elec. Outlets

	Many	X	Ave.		Few

(13) Plumbing

2	Average Fixture(s)
	3 Fixture Bath
	2 Fixture Bath
	Softener, Auto
	Softener, Manual
	Solar Water Heat
	No Plumbing
	Extra Toilet
	Extra Sink
	Separate Shower
	Ceramic Tile Floor
	Ceramic Tile Wains
	Ceramic Tub Alcove
	Vent Fan

(14) Water/Sewer

	Public Water
	Public Sewer
1	Water Well
1	1000 Gal Septic
	2000 Gal Septic

Lump Sum Items:

(15) Built-ins

	Appliance Allow.
	Cook Top
	Dishwasher
	Garbage Disposal
	Bath Heater
	Vent Fan
	Hot Tub
	Unvented Hood
	Vented Hood
	Intercom
	Jacuzzi Tub
	Jacuzzi repl.Tub
	Oven
	Microwave
	Standard Range
	Self Clean Range
	Sauna
	Trash Compactor
	Central Vacuum
	Security System

(15) Fireplaces

	Interior 1 Story
	Interior 2 Story
	2nd/Same Stack
	Two Sided
	Exterior 1 Story
	Exterior 2 Story
	Prefab 1 Story
	Prefab 2 Story
	Heat Circulator
	Raised Hearth
	Wood Stove
	Direct-Vented Gas

Class: CD
Effec. Age: 23
Floor Area: 1,560
Total Base New : 219,402 E.C.F.
Total Depr Cost: 168,939 X 1.297
Estimated T.C.V: 219,114

(16) Porches/Decks

Area	Type
16	WPP

(17) Garage

Year Built:
Car Capacity:
Class: CD
Exterior: Pole
Brick Ven.: 0
Stone Ven.: 0
Common Wall: Detache
Foundation: 18 Inch
Finished ?:
Auto. Doors: 0
Mech. Doors: 0
Area: 1200
% Good: 0
Storage Area: 0
No Conc. Floor: 0

Bsmnt Garage:

Carport Area:
Roof:

Cost Est. for Res. Bldg: 1 Single Family PLAIN Cls CD Blt 0
(11) Heating System: Forced Air w/ Ducts
Ground Area = 780 SF Floor Area = 1560 SF.
Phy/Ab.Phy/Func/Econ/Comb. % Good=77/100/100/100/77
Building Areas

Stories	Exterior	Foundation	Size	Cost New	Depr. Cost
2 Story	Siding	Basement	780		
			Total:	176,396	135,824
Other Additions/Adjustments					
Plumbing					
3 Fixture Bath			1	3,887	2,993
Water/Sewer					
1000 Gal Septic			1	4,582	3,528
Water Well, 100 Feet			1	5,680	4,374
Porches					
WPP			16	805	620
Garages					
Class: CD Exterior: Pole (Unfinished)					
Base Cost			1200	26,100	20,097
Local Cost Items					
WOOD LEAN TO			320	1,952	1,503
			Totals:	219,402	168,939

Notes:
ECF (RESIDENTIAL) 1.297 => TCV: 219,114

*** Information herein deemed reliable but not guaranteed***

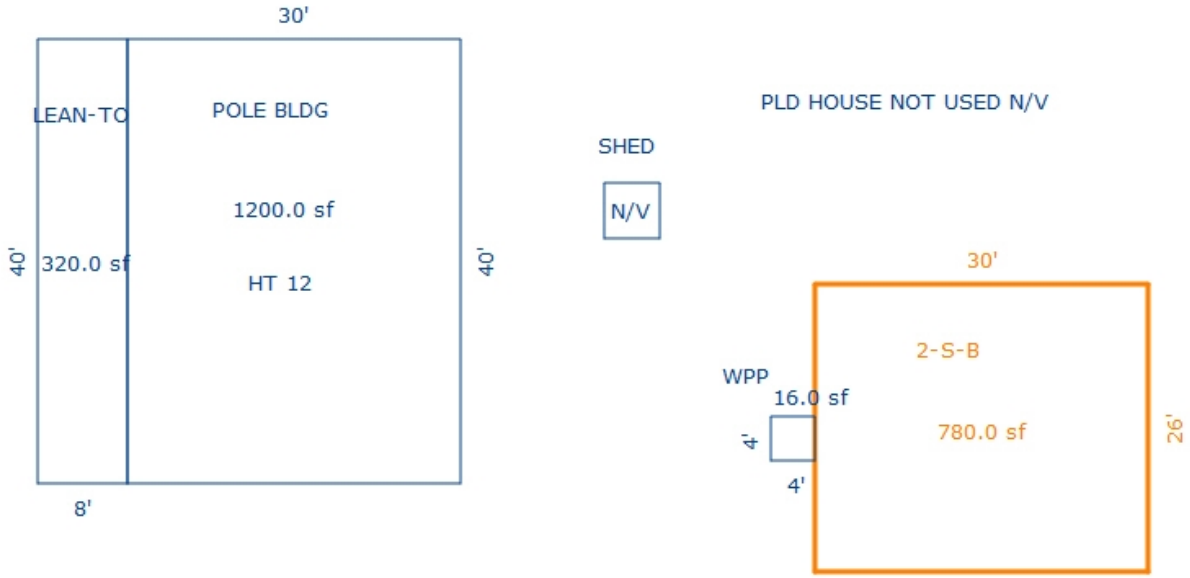

Sketch by Apex Sketch

*** Information herein deemed reliable but not guaranteed***

Parcel Number: 2410-23-3307 Jurisdiction: GREENWOOD TWP County: WEXFORD Printed on 02/15/2024

Grantor	Grantee	Sale Price	Sale Date	Inst. Type	Terms of Sale	Liber & Page	Verified By	Prcnt. Trans.

Property Address
8112 N 33 RD

Owner's Name/Address
JONAS, TODD & RONDA 8112 N 33 RD MANTON MI 49663

Tax Description
PAR COM 431.62 FT N OF SW COR: N 180.09 FT; E 290.35 FT; S 180.09 FT; W 290.35 FT TO POB. AKA PAR "C" 1.20 A. M/L GW. SEC. 23 T24N R10W - MANTON -

Comments/Influences
Default Comments

The Equalizer. Copyright (c) 1999 - 2009. Licensed To: Township of Greenwood, County of Wexford, Michigan

Class: RESIDENTIAL-IMPROV Zoning:

School: MANTON CONSOLIDATED SCHOOLS

P.R.E. 100% / /

:

2024 Est TCV 64,613 TCV/TFA: 55.51

Building Permit(s)	Date	Number	Status
Garage, Detached	08/30/2017	PB17-0175	COMPLETE
MOBILE HOME	04/10/1997	PE10299	

X	Improved		Vacant

	Public Improvements
	Dirt Road
	Gravel Road
X	Paved Road
	Storm Sewer
	Sidewalk
	Water
	Sewer
X	Electric
	Gas
	Curb
	Street Lights
	Standard Utilities
	Underground Utils.

	Topography of Site
X	Level
	Rolling
	Low
	High
	Landscaped
	Swamp
	Wooded
	Pond
	Waterfront
	Ravine
	Wetland
	Flood Plain
X	PINES/OPEN

Who	When	What
GLA	05/30/2017	INSPECTION
LM	10/20/2010	INSPECTED

Land Value Estimates for Land Table 4010.LAND VALUES

Description	Frontage	Depth	* Factors * Front	Depth	Rate	%Adj.	Reason	Value
HELSEL RIV LOW	180.00	290.00	1.0000	0.0000	315	100*		0
ACREAGE			0.888 Acres		10,953	100		9,726
ROW			0.310 Acres		0	100		0

* denotes lines that do not contribute to the total acreage calculation.

180 Actual Front Feet, 1.20 Total Acres Total Est. Land Value = 9,726

Land Improvement Cost Estimates

Description	Rate	Size	% Good	Cash Value
Wood Frame	18.89	296	10	559
Wood Frame	19.95	192	10	383
Total Estimated Land Improvements True Cash Value =				942

Year	Land Value	Building Value	Assessed Value	Board of Review	Tribunal/ Other	Taxable Value
2024	4,900	27,400	32,300			17,532C
2023	2,700	22,100	24,800			16,698C
2022	2,200	18,500	20,700			15,903C
2021	2,700	15,800	18,500			15,395C

*** Information herein deemed reliable but not guaranteed***

Building Type

	Single Family
X	Mobile Home
	Town Home
	Duplex
	A-Frame

X	Wood Frame

Building Style: SWT/DWT

Yr Built	Remodeled
0	0

Condition: Fair

Room List

	Basement
	1st Floor
	2nd Floor
	Bedrooms

(1) Exterior

X	Wood/Shingle
	Aluminum/Vinyl
	Brick
	Insulation

(2) Windows

X	Many Avg. Few		Large Avg. Small

	Wood Sash
	Metal Sash
	Vinyl Sash
	Double Hung
	Horiz. Slide
	Casement
	Double Glass
	Patio Doors
	Storms & Screens

(3) Roof

X	Gable		Gambrel
	Hip		Mansard
	Flat		Shed

X	Asphalt Shingle

Chimney: Brick

(3) Roof (cont.)

	Eavestrough
	Insulation
0	Front Overhang
0	Other Overhang

(4) Interior

	Drywall Paneled		Plaster Wood T&G

Trim & Decoration

	Ex	X	Ord		Min

Size of Closets

	Lg	X	Ord		Small

Doors:		Solid	X	H.C.	

(5) Floors

Kitchen:
Other:
Other:

(6) Ceilings

(7) Excavation

Basement: 0 S.F.
Crawl: 240 S.F.
Slab: 0 S.F.
Height to Joists: 0.0

(8) Basement

	Conc. Block
	Poured Conc.
	Stone
	Treated Wood
	Concrete Floor

(9) Basement Finish

	Recreation SF
	Living SF
	Walkout Doors (B)
	No Floor SF
	Walkout Doors (A)

(10) Floor Support

Joists:
Unsupported Len:
Cntr.Sup:

(11) Heating/Cooling

X	Gas		Oil		Elec.	
	Wood		Coal		Steam	

X	Forced Warm Air
	Wall Furnace
	Warm & Cool Air
	Heat Pump

	Central Air
	Wood Furnace

(12) Electric

0	Amps Service

No./Qual. of Fixtures

	Ex.	X	Ord.		Min

No. of Elec. Outlets

	Many	X	Ave.		Few

(13) Plumbing

1	Average Fixture(s)
	3 Fixture Bath
	2 Fixture Bath
	Softener, Auto
	Softener, Manual
	Solar Water Heat
	No Plumbing
	Extra Toilet
	Extra Sink
	Separate Shower
	Ceramic Tile Floor
	Ceramic Tile Wains
	Ceramic Tub Alcove
	Vent Fan

(14) Water/Sewer

	Public Water
	Public Sewer
1	Water Well
1	1000 Gal Septic
	2000 Gal Septic

Lump Sum Items:

(15) Built-ins

	Appliance Allow.
	Cook Top
	Dishwasher
	Garbage Disposal
	Bath Heater
	Vent Fan
	Hot Tub
	Unvented Hood
	Vented Hood
	Intercom
	Jacuzzi Tub
	Jacuzzi repl.Tub
	Oven
	Microwave
	Standard Range
	Self Clean Range
	Sauna
	Trash Compactor
	Central Vacuum
	Security System

(15) Fireplaces

	Interior 1 Story
	Interior 2 Story
	2nd/Same Stack
	Two Sided
	Exterior 1 Story
	Exterior 2 Story
	Prefab 1 Story
	Prefab 2 Story
	Heat Circulator
	Raised Hearth
	Wood Stove
	Direct-Vented Gas

Class: Low
Effec. Age: 55
Floor Area:
Total Base New : 120,384 E.C.F.
Total Depr Cost: 41,592 X 1.297
Estimated T.C.V: 53,945

(16) Porches/Decks

Area	Type
294	WGEP (1 Story)
54	Treated Wood
42	Treated Wood

(17) Garage

Year Built:
Car Capacity:
Class: CD
Exterior: Pole
Brick Ven.: 0
Stone Ven.: 0
Common Wall: Detache
Foundation: 18 Inch
Finished ?:
Auto. Doors: 0
Mech. Doors: 0
Area: 1350
% Good: 0
Storage Area: 0
No Conc. Floor: 0

Bsmnt Garage:

Carport Area:
Roof:

Cost Est. for Res. Bldg: 1 Mobile Home SWT/DWT Cls Low Blt 0
(11) Heating System: Forced Warm Air
Ground Area = 1164 SF Floor Area = 1164 SF.
Phy/Ab.Phy/Func/Econ/Comb. % Good=35/100/100/100/35
Building Areas

Type	Ext. Walls	Roof/Fnd.	Size	Cost New	Depr. Cost	
Main Home	Siding	Comp.Shingle	924			
Addition	Siding	Crawl	240			
		Total:		61,211	21,423	
Other Additions/Adjustments						
Skirting, Metal or Vinyl, Vertical			160	1,738	608	
Water/Sewer						
1000 Gal Septic			1	4,293	1,503	
Water Well, 100 Feet			1	5,545	1,941	
Porches						
WGEP (1 Story)			294	14,444	5,055	
Deck						
Treated Wood			54	1,773	35	*2
Treated Wood			42	1,580	553	
Garages						
Class: CD Exterior: Pole (Unfinished)						
Base Cost			1350	29,363	10,277	
Local Cost Items						
SHED			56	437	197	*4
		Totals:		120,384	41,592	

Notes:

ECF (RESIDENTIAL) 1.297 => TCV: 53,945

*** Information herein deemed reliable but not guaranteed***

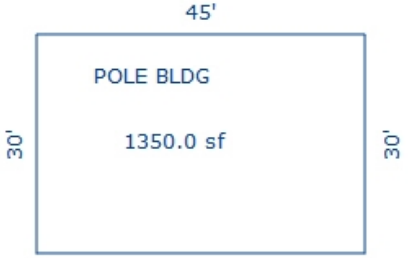

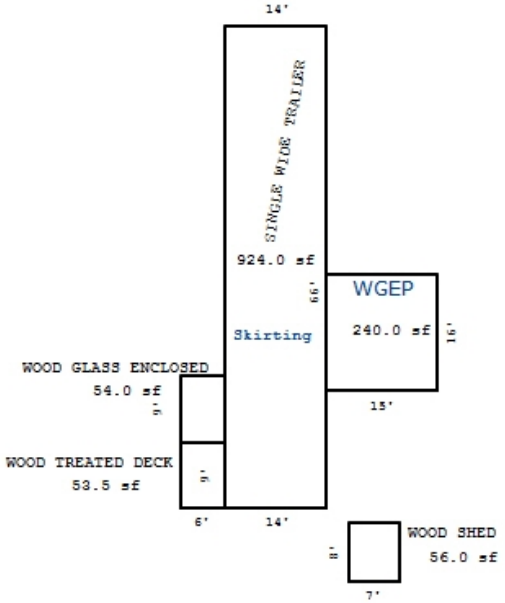

Sketch by Apex Sketch

*** Information herein deemed reliable but not guaranteed***

Parcel Number: 2410-23-3401 Jurisdiction: GREENWOOD TWP County: WEXFORD Printed on 02/15/2024

Grantor	Grantee	Sale Price	Sale Date	Inst. Type	Terms of Sale	Liber & Page	Verified By	Prcnt. Trans.
BOYD, JOHNATHON R & JESSAM		0	11/10/2017	WD	21-NOT USED/OTHER	681 /1394	DEED	0.0
PETERSON, DEVERE O.,JR & G	BOYD, JOHNATHON R & JESSAN	120,000	11/02/2017	WD	03-ARM'S LENGTH	681 /1117	DEED	100.0
PETERSON, DEVERE O.,JR & G	PETERSON, DEVERE O.,JR & (	0	04/08/2010	QC	09-FAMILY	629/2874	DEED	0.0

Property Address

4255 E 10 RD

Owner's Name/Address

BOYD, JOHNATHON R & JESSAMYN L
4255 E 10 RD
MANTON MI 49663-9748

Tax Description

SE 1/4 OF SW 1/4 40 A. GW. SEC. 23 T24N R10W -MANTON-

Comments/Influences

The Equalizer. Copyright (c) 1999 - 2009. Licensed To: Township of Greenwood, County of Wexford, Michigan

Class: RESIDENTIAL-IMPROV Zoning:

School: MANTON CONSOLIDATED SCHOOLS

P.R.E. 100% 11/06/2019

:

2024 Est TCV 316,329 TCV/TFA: 419.53

Building Permit(s)	Date	Number	Status
Foundation	05/08/2019	PB19-0068	COMPLETE

X Improved | Vacant

	Public Improvements
	Dirt Road
	Gravel Road
X	Paved Road
	Storm Sewer
	Sidewalk
	Water
	Sewer
X	Electric
	Gas
	Curb
	Street Lights
	Standard Utilities
	Underground Utils.

	Topography of Site
	Level
X	Rolling
X	Low
X	High
	Landscaped
	Swamp
X	Wooded
	Pond
	Waterfront
	Ravine
	Wetland
	Flood Plain
X	PINES/OPEN

Who	When	What
GLA	05/30/2017	INSPECTION

Land Value Estimates for Land Table 4010.LAND VALUES

Description	Frontage	Depth	* Factors * Front	Depth	Rate	%Adj.	Reason	Value
ACREAGE			39.030 Acres		2,722	100		106,240
ROW			0.970 Acres		0	100		0
			40.00 Total Acres		Total Est. Land Value =			106,240

Land Improvement Cost Estimates

Description	Rate	Size	% Good	Cash Value
Wood Frame	25.79	80	45	928
Total Estimated Land Improvements True Cash Value =				928

Year	Land Value	Building Value	Assessed Value	Board of Review	Tribunal/ Other	Taxable Value
2024	53,100	105,100	158,200			117,374C
2023	47,000	85,900	132,900			111,785C
2022	37,400	72,700	110,100			106,462C
2021	33,300	73,700	107,000			103,061C

*** Information herein deemed reliable but not guaranteed***

Building Type

X	Single Family
	Mobile Home
	Town Home
	Duplex
	A-Frame
X	Wood Frame

Building Style: PLAIN

Yr Built	Remodeled
0	0

Condition: Good

Room List

	Basement
	1st Floor
	2nd Floor
	Bedrooms

(1) Exterior

	Wood/Shingle
X	Aluminum/Vinyl
	Brick
X	Insulation

(2) Windows

	Many		Large
X	Avg.	X	Avg.
	Few		Small

	Wood Sash
	Metal Sash
X	Vinyl Sash
	Double Hung
	Horiz. Slide
	Casement
	Double Glass
	Patio Doors
X	Storms & Screens

(3) Roof

X	Gable		Gambrel
	Hip		Mansard
	Flat		Shed

X	Asphalt Shingle

Chimney:

(3) Roof (cont.)

	Eavestrough
X	Insulation
0	Front Overhang
0	Other Overhang

(4) Interior

X	Drywall		Plaster
	Paneled		Wood T&G

Trim & Decoration

	Ex	X	Ord		Min

Size of Closets

	Lg	X	Ord		Small

Doors:		Solid	X	H.C.	

(5) Floors

Kitchen:
Other: Linoleum
Other: Carpeted

(6) Ceilings

X	Drywall		

(7) Excavation

Basement: 0 S.F.
Crawl: 396 S.F.
Slab: 0 S.F.
Height to Joists: 0.0

(8) Basement

	Conc. Block
	Poured Conc.
	Stone
	Treated Wood
	Concrete Floor

(9) Basement Finish

	Recreation SF
	Living SF
	Walkout Doors (B)
	No Floor SF
	Walkout Doors (A)

(10) Floor Support

Joists:
Unsupported Len:
Cntr.Sup:

(11) Heating/Cooling

X	Gas		Oil		Elec.
	Wood		Coal		Steam

	Forced Air w/o Ducts
X	Forced Air w/ Ducts
	Forced Hot Water
	Electric Baseboard
	Elec. Ceil. Radiant
	Radiant (in-floor)
	Electric Wall Heat
	Space Heater
	Wall/Floor Furnace
	Forced Heat & Cool
	Heat Pump
	No Heating/Cooling

	Central Air
	Wood Furnace

(12) Electric

150	Amps Service

No./Qual. of Fixtures

	Ex.	X	Ord.		Min

No. of Elec. Outlets

	Many	X	Ave.		Few

(13) Plumbing

	Average Fixture(s)
1	3 Fixture Bath
	2 Fixture Bath
	Softener, Auto
	Softener, Manual
	Solar Water Heat
	No Plumbing
	Extra Toilet
	Extra Sink
	Separate Shower
	Ceramic Tile Floor
	Ceramic Tile Wains
	Ceramic Tub Alcove
	Vent Fan

(14) Water/Sewer

	Public Water
	Public Sewer
1	Water Well
1	1000 Gal Septic
	2000 Gal Septic

Lump Sum Items:

(15) Built-ins

	Appliance Allow.
	Cook Top
	Dishwasher
	Garbage Disposal
	Bath Heater
	Vent Fan
	Hot Tub
	Unvented Hood
	Vented Hood
	Intercom
	Jacuzzi Tub
	Jacuzzi repl.Tub
	Oven
	Microwave
	Standard Range
	Self Clean Range
	Sauna
	Trash Compactor
	Central Vacuum
	Security System

(15) Fireplaces

	Interior 1 Story
	Interior 2 Story
	2nd/Same Stack
	Two Sided
	Exterior 1 Story
	Exterior 2 Story
	Prefab 1 Story
	Prefab 2 Story
	Heat Circulator
	Raised Hearth
	Wood Stove
	Direct-Vented Gas

Class: D
Effec. Age: 49
Floor Area: 396
Total Base New : 93,380 E.C.F.
Total Depr Cost: 60,343 X 1.297
Estimated T.C.V: 78,265

(16) Porches/Decks

Area	Type
24	CPP
28	WCP (1 Story)

(17) Garage

Year Built: 2018
Car Capacity:
Class: CD
Exterior: Pole
Brick Ven.: 0
Stone Ven.: 0
Common Wall: Detache
Foundation: 18 Inch
Finished ?:
Auto. Doors: 0
Mech. Doors: 0
Area: 1152
% Good: 95
Storage Area: 0
No Conc. Floor: 0

Bsmnt Garage:

Carport Area:
Roof:

Cost Est. for Res. Bldg: 1 Single Family PLAIN Cls D Blt 0
(11) Heating System: Forced Air w/ Ducts
Ground Area = 396 SF Floor Area = 396 SF.
Phy/Ab.Phy/Func/Econ/Comb. % Good=51/100/100/100/51
Building Areas

Stories	Exterior	Foundation	Size	Cost New	Depr. Cost	
1 Story	Siding	Crawl Space	396			
			Total:	50,814	25,915	
Other Additions/Adjustments						
Water/Sewer						
1000 Gal Septic			1	4,293	2,189	
Water Well, 100 Feet			1	5,545	2,828	
Porches						
WCP (1 Story)			28	1,862	1,396	*7
CPP			24	604	308	
Garages						
Class: CD Exterior: Pole (Unfinished)						
Base Cost			1152	25,056	23,803	*9
Local Cost Items						
POLE LEANTO DIRT			100	370	277	*7
SHED			620	4,836	3,627	*7
			Totals:	93,380	60,343	

Notes:
ECF (RESIDENTIAL) 1.297 => TCV: 78,265

*** Information herein deemed reliable but not guaranteed***

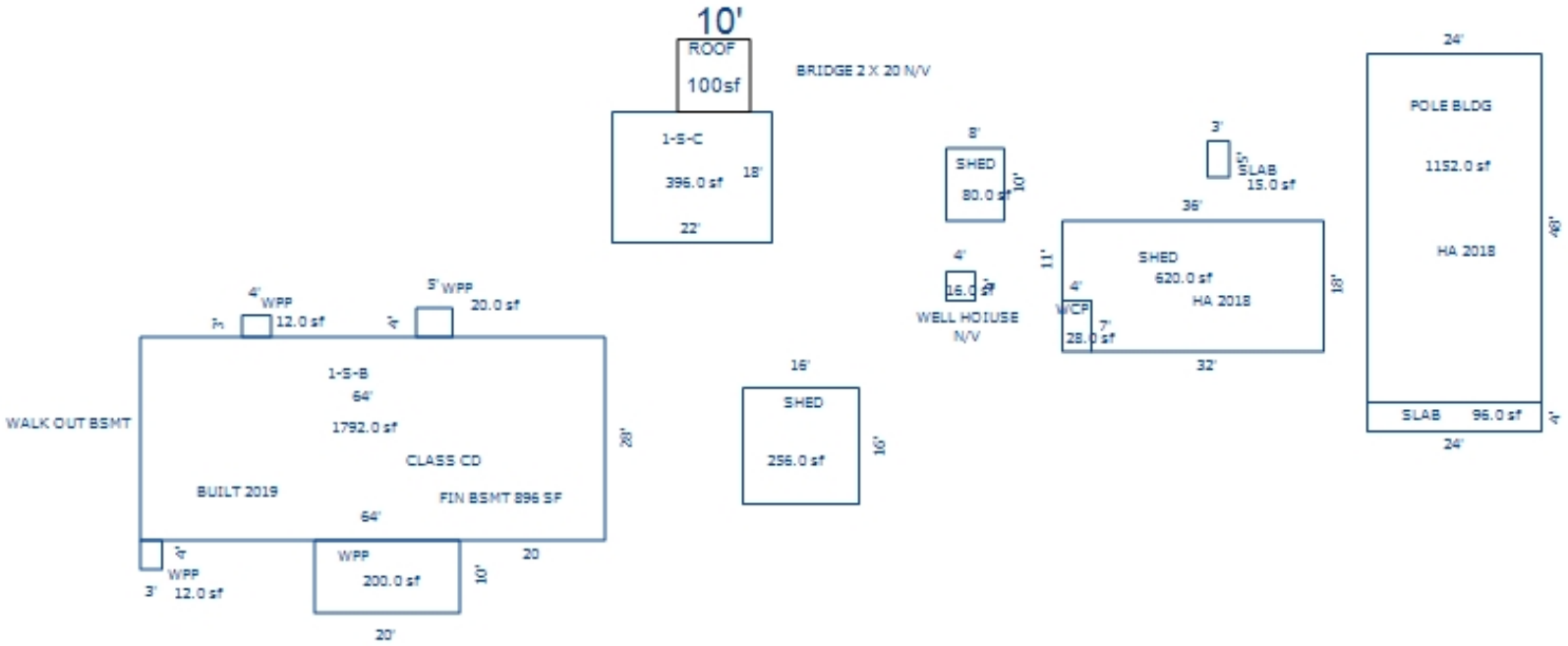

*** Information herein deemed reliable but not guaranteed***

Building Type

X	Single Family
	Mobile Home
	Town Home
	Duplex
	A-Frame
X	Wood Frame

Building Style: PLAIN

Yr Built	Remodeled
0	0

Condition: Good

Room List

	Basement
	1st Floor
	2nd Floor
	Bedrooms

(1) Exterior

	Wood/Shingle
X	Aluminum/Vinyl
	Brick
X	Insulation

(2) Windows

X	Many Avg. Few		Large Avg. Small

	Wood Sash
	Metal Sash
X	Vinyl Sash
	Double Hung
	Horiz. Slide
	Casement
	Double Glass
	Patio Doors
X	Storms & Screens

(3) Roof

X	Gable		Gambrel
	Hip		Mansard
	Flat		Shed

X	Asphalt Shingle

Chimney:

(3) Roof (cont.)

	Eavestrough
X	Insulation
0	Front Overhang
0	Other Overhang

(4) Interior

X	Drywall		Plaster
	Paneled		Wood T&G

Trim & Decoration

	Ex	X	Ord		Min

Size of Closets

	Lg	X	Ord		Small

Doors:		Solid	X	H.C.	

(5) Floors

Kitchen:
Other: Linoleum
Other: Carpeted

(6) Ceilings

X	Drywall		

(7) Excavation

Basement: 358 S.F.
Crawl: 0 S.F.
Slab: 0 S.F.
Height to Joists: 0.0

(8) Basement

	Conc. Block
	Poured Conc.
	Stone
	Treated Wood
	Concrete Floor

(9) Basement Finish

	Recreation	SF
896	Living	SF
1	Walkout Doors (B)	
	No Floor	SF
	Walkout Doors (A)	

(10) Floor Support

Joists:
Unsupported Len:
Cntr.Sup:

(11) Heating/Cooling

X	Gas		Oil		Elec.
	Wood		Coal		Steam

	Forced Air w/o Ducts
X	Forced Air w/ Ducts
	Forced Hot Water
	Electric Baseboard
	Elec. Ceil. Radiant
	Radiant (in-floor)
	Electric Wall Heat
	Space Heater
	Wall/Floor Furnace
	Forced Heat & Cool
	Heat Pump
	No Heating/Cooling

	Central Air
	Wood Furnace

(12) Electric

150	Amps Service

No./Qual. of Fixtures

	Ex.	X	Ord.		Min

No. of Elec. Outlets

	Many	X	Ave.		Few

(13) Plumbing

1	Average Fixture(s)
	3 Fixture Bath
	2 Fixture Bath
	Softener, Auto
	Softener, Manual
	Solar Water Heat
	No Plumbing
	Extra Toilet
	Extra Sink
	Separate Shower
	Ceramic Tile Floor
	Ceramic Tile Wains
	Ceramic Tub Alcove
	Vent Fan

(14) Water/Sewer

	Public Water
	Public Sewer
1	Water Well
1	1000 Gal Septic
	2000 Gal Septic

Lump Sum Items:

(15) Built-ins

	Appliance Allow.
	Cook Top
	Dishwasher
	Garbage Disposal
	Bath Heater
	Vent Fan
	Hot Tub
	Unvented Hood
	Vented Hood
	Intercom
	Jacuzzi Tub
	Jacuzzi repl.Tub
	Oven
	Microwave
	Standard Range
	Self Clean Range
	Sauna
	Trash Compactor
	Central Vacuum
	Security System

(15) Fireplaces

	Interior 1 Story
	Interior 2 Story
	2nd/Same Stack
	Two Sided
	Exterior 1 Story
	Exterior 2 Story
	Prefab 1 Story
	Prefab 2 Story
	Heat Circulator
	Raised Hearth
	Wood Stove
	Direct-Vented Gas

Class: CD
Effec. Age: 5
Floor Area: 358
Total Base New : 106,234 E.C.F.
Total Depr Cost: 100,922 X 1.297
Estimated T.C.V: 130,896

(16) Porches/Decks

Area	Type
244	WPP

(17) Garage

Year Built:
Car Capacity:
Class:
Exterior:
Brick Ven.:
Stone Ven.:
Common Wall:
Foundation:
Finished ?:
Auto. Doors:
Mech. Doors:
Area:
% Good:
Storage Area:
No Conc. Floor:

Bsmnt Garage:

Carport Area:
Roof:

Cost Est. for Res. Bldg: 2 Single Family PLAIN Cls CD Blt 0
(11) Heating System: Forced Air w/ Ducts
Ground Area = 358 SF Floor Area = 358 SF.
Phy/Ab.Phy/Func/Econ/Comb. % Good=95/100/100/100/95
Building Areas

Stories	Exterior	Foundation	Size	Cost New	Depr. Cost
1 Story	Siding	Basement	358		
			Total:	57,234	54,372
Other Additions/Adjustments					
Basement Living Area			896	30,168	28,660
Basement, Outside Entrance, Below Grade			1	2,176	2,067
Water/Sewer					
1000 Gal Septic			1	4,582	4,353
Water Well, 100 Feet			1	5,680	5,396
Porches					
WPP			244	4,397	4,177
Local Cost Items					
SHED			256	1,997	1,897
			Totals:	106,234	100,922

Notes:
ECF (RESIDENTIAL) 1.297 => TCV: 130,896

*** Information herein deemed reliable but not guaranteed***

Parcel Number: 2410-23-4101-01 Jurisdiction: GREENWOOD TWP County: WEXFORD Printed on 02/15/2024

Grantor	Grantee	Sale Price	Sale Date	Inst. Type	Terms of Sale	Liber & Page	Verified By	Prcnt. Trans.
LLOYD, BEVERLY A LE ETAL	MCKEON, JEFFREY & MARY	110,000	01/03/2023	WD	03-ARM'S LENGTH	694/1551	DEED	100.0

Property Address

4721 E 10 RD

Owner's Name/Address

MCKEON, JEFFREY & MARY
17775 23 MILE RD
MACOMB MI 48042

Tax Description

PT OF E 1/2 OF SE 1/4 DESC AS COM AT E 1/4 COR OF SD SEC; S02*25'23"W 16 FT TO POB: CONT S02*25'23" W 1347.05 FT; W 1285.55 FT; N02*26'45" E 1347.02 FT; E 1285 FT TO POB 39.73 AC M/L GW . SEC. 23 T24N R10W -MANTON- [[ASSESSED W/ 23-4101 '00
SPLIT ON 11/16/2022 FROM 2410-23-4401;

Comments/Influences

Split/Comb. on 11/16/2022 completed 11/16/2022 LINDA ;
Parent Parcel(s): 2410-23-4401;
Child Parcel(s): 2410-23-4101-01, 2410-23-4401-01, 2410-23-4401-02, 2410-23-4401-03;

The Equalizer. Copyright (c) 1999 - 2009. Licensed To: Township of Greenwood, County of Wexford, Michigan

Class: RESIDENTIAL-VACANT Zoning:

School: MANTON CONSOLIDATED SCHOOLS

P.R.E. 0%

:

2024 Est TCV 108,145

Building Permit(s)	Date	Number	Status

Improved | X | Vacant

Public Improvements

Dirt Road
Gravel Road
Paved Road
Storm Sewer
Sidewalk
Water
Sewer
Electric
Gas
Curb
Street Lights
Standard Utilities
Underground Utils.

Topography of Site

Level
Rolling
Low
High
Landscaped
Swamp
Wooded
Pond
Waterfront
Ravine
Wetland
Flood Plain

Who When What

Land Value Estimates for Land Table 4010.LAND VALUES

Description	Frontage	Depth	* Factors * Front	Depth	Rate	%Adj.	Reason	Value
ACREAGE			39.730 Acres		2,722	100		108,145
			39.73 Total Acres		Total Est. Land Value =			108,145

Year	Land Value	Building Value	Assessed Value	Board of Review	Tribunal/ Other	Taxable Value
2024	54,100	0	54,100			54,100S
2023	47,700	0	47,700			47,700S
2022	0	0	0			0
2021	0	0	0			0

*** Information herein deemed reliable but not guaranteed***

Parcel Number: 2410-23-4201 Jurisdiction: GREENWOOD TWP County: WEXFORD Printed on 02/15/2024

Grantor	Grantee	Sale Price	Sale Date	Inst. Type	Terms of Sale	Liber & Page	Verified By	Prcnt. Trans.
SEYFORTH, WALTER W.	WILLIAMS, GERALD R.	14,000	10/02/1992	LC	03-ARM'S LENGTH	331:679	DEED	0.0

Property Address

8375 N 35 RD

Owner's Name/Address

WILLIAMS, GERALD R.
18720 MORANG DR
DETROIT MI 48205-2926

Tax Description

NW 1/4 OF SE 1/4 & N 16 FT OF NE 1/4 OF SE 1/4 --40.48 A.-- GW. SEC. 23 T24N R10W -MANTON-

Comments/Influences

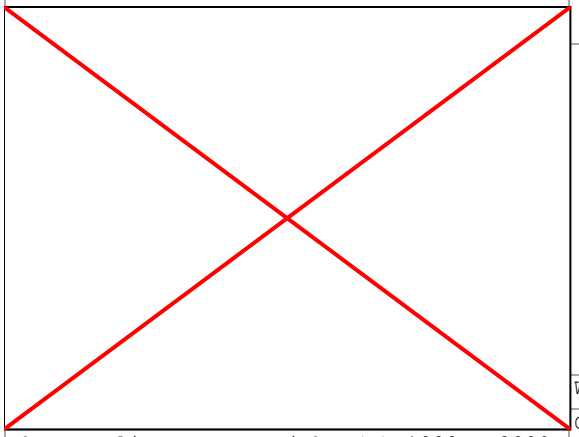

The Equalizer. Copyright (c) 1999 - 2009. Licensed To: Township of Greenwood, County of Wexford, Michigan

Class: RESIDENTIAL-IMPROV Zoning:

School: MANTON CONSOLIDATED SCHOOLS

P.R.E. 0%

:

2024 Est TCV 139,784 TCV/TFA: 0.00

Building Permit(s)	Date	Number	Status
Electrical	08/06/2009	PE09-18546	
RESIDENTIAL - NEW	11/05/2004	PM8096	
RESIDENTIAL - REMODEL	04/27/2004	PB12117	

X Improved | Vacant

	Public Improvements
	Dirt Road
X	Gravel Road
	Paved Road
	Storm Sewer
	Sidewalk
	Water
	Sewer
X	Electric
	Gas
	Curb
	Street Lights
	Standard Utilities
	Underground Utils.

	Topography of Site
X	Level
X	Rolling
	Low
	High
	Landscaped
	Swamp
X	Wooded
	Pond
	Waterfront
	Ravine
	Wetland
	Flood Plain
X	PINES/OPEN

Who	When	What
GLA	05/30/2017	INSPECTION

Land Value Estimates for Land Table 4010.LAND VALUES

Description	Frontage	Depth	* Factors * Front	Depth	Rate	%Adj.	Reason	Value
ACREAGE			40.430 Acres		2,722	100		110,050
			0.050 Acres		0	100		0
			40.48 Total Acres		Total Est. Land Value =			110,050

Year	Land Value	Building Value	Assessed Value	Board of Review	Tribunal/ Other	Taxable Value
2024	55,000	14,900	69,900			39,798C
2023	49,000	12,100	61,100			37,903C
2022	38,200	10,200	48,400			36,099C
2021	34,400	10,300	44,700			34,946C

*** Information herein deemed reliable but not guaranteed***

Building Type

X	Single Family
	Mobile Home
	Town Home
	Duplex
	A-Frame
X	Wood Frame

Building Style: PLAIN

Yr Built	Remodeled
0	0

Condition: Good

Room List

	Basement
	1st Floor
	2nd Floor
	Bedrooms

(1) Exterior

	Wood/Shingle
X	Aluminum/Vinyl
	Brick
X	Insulation

(2) Windows

X	Many Avg. Few		Large Avg. Small

	Wood Sash
	Metal Sash
X	Vinyl Sash
	Double Hung
	Horiz. Slide
	Casement
	Double Glass
	Patio Doors
X	Storms & Screens

(3) Roof

X	Gable		Gambrel
	Hip		Mansard
	Flat		Shed

X	Asphalt Shingle

Chimney:

(3) Roof (cont.)

	Eavestrough
X	Insulation
0	Front Overhang
0	Other Overhang

(4) Interior

X	Drywall Paneled		Plaster Wood T&G

Trim & Decoration

	Ex	X	Ord		Min

Size of Closets

	Lg	X	Ord		Small

Doors:		Solid	X	H.C.	

(5) Floors

Kitchen:
Other: Linoleum
Other: Carpeted

(6) Ceilings

X	Drywall

(7) Excavation

Basement: 0 S.F.
Crawl: 0 S.F.
Slab: 0 S.F.
Height to Joists: 0.0

(8) Basement

	Conc. Block
	Poured Conc.
	Stone
	Treated Wood
	Concrete Floor

(9) Basement Finish

	Recreation SF
	Living SF
	Walkout Doors (B)
	No Floor SF
	Walkout Doors (A)

(10) Floor Support

Joists:
Unsupported Len:
Cntr.Sup:

(11) Heating/Cooling

X	Gas Wood		Oil Coal		Elec. Steam

	Forced Air w/o Ducts
X	Forced Air w/ Ducts
	Forced Hot Water
	Electric Baseboard
	Elec. Ceil. Radiant
	Radiant (in-floor)
	Electric Wall Heat
	Space Heater
	Wall/Floor Furnace
	Forced Heat & Cool
	Heat Pump
	No Heating/Cooling

	Central Air
	Wood Furnace

(12) Electric

150	Amps Service

No./Qual. of Fixtures

	Ex.	X	Ord.		Min

No. of Elec. Outlets

	Many	X	Ave.		Few

(13) Plumbing

1	Average Fixture(s)
	3 Fixture Bath
	2 Fixture Bath
	Softener, Auto
	Softener, Manual
	Solar Water Heat
	No Plumbing
	Extra Toilet
	Extra Sink
	Separate Shower
	Ceramic Tile Floor
	Ceramic Tile Wains
	Ceramic Tub Alcove
	Vent Fan

(14) Water/Sewer

	Public Water
	Public Sewer
1	Water Well
1	1000 Gal Septic
	2000 Gal Septic

Lump Sum Items:

(15) Built-ins

	Appliance Allow.
	Cook Top
	Dishwasher
	Garbage Disposal
	Bath Heater
	Vent Fan
	Hot Tub
	Unvented Hood
	Vented Hood
	Intercom
	Jacuzzi Tub
	Jacuzzi repl.Tub
	Oven
	Microwave
	Standard Range
	Self Clean Range
	Sauna
	Trash Compactor
	Central Vacuum
	Security System

(15) Fireplaces

	Interior 1 Story
	Interior 2 Story
	2nd/Same Stack
	Two Sided
	Exterior 1 Story
	Exterior 2 Story
	Prefab 1 Story
	Prefab 2 Story
	Heat Circulator
	Raised Hearth
	Wood Stove
	Direct-Vented Gas

Class: CD
Effec. Age: 20
Floor Area: 0
Total Base New : 28,656 E.C.F.
Total Depr Cost: 22,925 X 1.297
Estimated T.C.V: 29,734

(16) Porches/Decks

Area	Type

(17) Garage

Year Built:
Car Capacity:
Class: CD
Exterior: Pole
Brick Ven.: 0
Stone Ven.: 0
Common Wall: Detache
Foundation: 18 Inch
Finished ?:
Auto. Doors: 0
Mech. Doors: 0
Area: 768
% Good: 0
Storage Area: 0
No Conc. Floor: 0

Bsmnt Garage:

Carport Area:
Roof:

Cost Est. for Res. Bldg: 1 Single Family PLAIN Cls CD Blt 0
(11) Heating System: Forced Air w/ Ducts
Ground Area = 0 SF Floor Area = 0 SF.
Phy/Ab.Phy/Func/Econ/Comb. % Good=80/100/100/100/80
Building Areas

Stories Exterior Foundation	Size	Cost New	Depr. Cost
Other Additions/Adjustments			
Water/Sewer			
1000 Gal Septic	1	4,582	3,666
Water Well, 100 Feet	1	5,680	4,544
Garages			
Class: CD Exterior: Pole (Unfinished)			
Base Cost	768	18,394	14,715
Totals:		28,656	22,925

Notes:
ECF (RESIDENTIAL) 1.297 => TCV: 29,734

*** Information herein deemed reliable but not guaranteed***

Parcel Number: 2410-23-4301 Jurisdiction: GREENWOOD TWP County: WEXFORD Printed on 02/15/2024

Grantor	Grantee	Sale Price	Sale Date	Inst. Type	Terms of Sale	Liber & Page	Verified By	Prcnt. Trans.
WILLIAMS, LILLIE C	BREHNER, SCOTT A & MICHELI	53,000	01/28/2014	WD	03-ARM'S LENGTH	665/1784	DEED	100.0
RICHARD LICK		0	10/18/2013	OTH	21-NOT USED/OTHER	664/1492	DEED	0.0
SPARKS, JUNE M TRUST	LICK, ROBERT R & LILLIE C	45,000	02/22/2013	WD	08-ESTATE	656/542	DEED	100.0
SPARKS, JUNE M	SPARKS, JUNE M TRUST	0	02/24/2003	QC	21-NOT USED/OTHER	604/1280	DEED	0.0

Property Address

4619 E 10 RD

Owner's Name/Address

BREHMER, SCOTT A & MICHELLE L
4114 SW SNYDER BLVD
ANKENY IA 50023

Tax Description

SW 1/4 OF SE 1/4 40 A. GW. SEC. 23 T24N R10W -MANTON-

Comments/Influences

Class: RESIDENTIAL-IMPROV Zoning:

School: MANTON CONSOLIDATED SCHOOLS

P.R.E. 0%

:

2024 Est TCV 242,164 TCV/TFA: 308.88

Building Permit(s)	Date	Number	Status
RESIDENTIAL - NEW	08/08/2018	PB18-0151	COMPLETE

X	Improved		Vacant

	Public Improvements
	Dirt Road
	Gravel Road
X	Paved Road
	Storm Sewer
	Sidewalk
	Water
	Sewer
X	Electric
	Gas
	Curb
	Street Lights
	Standard Utilities
	Underground Utils.

	Topography of Site
	Level
X	Rolling
	Low
	High
	Landscaped
	Swamp
X	Wooded
	Pond
	Waterfront
	Ravine
	Wetland
	Flood Plain
X	PINES/OPEN

Who	When	What
GLA	05/30/2017	INSPECTION
GLA	08/02/2014	INSPECTION

Land Value Estimates for Land Table 4010.LAND VALUES

Description	Frontage	Depth	* Factors * Front	Depth	Rate	%Adj.	Reason	Value
	1290.00	1314.00	1.0000	0.0000	0	100*		0
ACREAGE			39.020 Acres		2,722	100		106,212
ROW			0.980 Acres		0	100		0

* denotes lines that do not contribute to the total acreage calculation.

1290 Actual Front Feet, 40.00 Total Acres Total Est. Land Value = 106,212

Year	Land Value	Building Value	Assessed Value	Board of Review	Tribunal/ Other	Taxable Value
2024	53,100	68,000	121,100			89,653C
2023	47,000	55,300	102,300			85,384C
2022	37,400	46,500	83,900			81,319C
2021	33,300	46,900	80,200			78,722C

The Equalizer. Copyright (c) 1999 - 2009.
Licensed To: Township of Greenwood, County of Wexford, Michigan

*** Information herein deemed reliable but not guaranteed***

Building Type

X	Single Family
	Mobile Home
	Town Home
	Duplex
	A-Frame
X	Wood Frame

Building Style: PLAIN

Yr Built	Remodeled
0	0

Condition: Good

Room List

	Basement
	1st Floor
	2nd Floor
	Bedrooms

(1) Exterior

	Wood/Shingle
X	Aluminum/Vinyl
	Brick
X	Insulation

(2) Windows

	Many		Large
X	Avg.	X	Avg.
	Few		Small

	Wood Sash
	Metal Sash
X	Vinyl Sash
	Double Hung
	Horiz. Slide
	Casement
	Double Glass
	Patio Doors
X	Storms & Screens

(3) Roof

X	Gable		Gambrel
	Hip		Mansard
	Flat		Shed

X	Asphalt Shingle

Chimney:

(3) Roof (cont.)

	Eavestrough
X	Insulation
0	Front Overhang
0	Other Overhang

(4) Interior

X	Drywall		Plaster
	Paneled		Wood T&G

Trim & Decoration

	Ex	X	Ord		Min

Size of Closets

	Lg	X	Ord		Small

Doors:		Solid	X	H.C.	

(5) Floors

Kitchen:
Other: Linoleum
Other: Carpeted

(6) Ceilings

X	Drywall

(7) Excavation

Basement: 0 S.F.
Crawl: 0 S.F.
Slab: 784 S.F.
Height to Joists: 0.0

(8) Basement

	Conc. Block
	Poured Conc.
	Stone
	Treated Wood
	Concrete Floor

(9) Basement Finish

	Recreation SF
	Living SF
	Walkout Doors (B)
	No Floor SF
	Walkout Doors (A)

(10) Floor Support

Joists:
Unsupported Len:
Cntr.Sup:

(11) Heating/Cooling

X	Gas		Oil		Elec.
	Wood		Coal		Steam

	Forced Air w/o Ducts
X	Forced Air w/ Ducts
	Forced Hot Water
	Electric Baseboard
	Elec. Ceil. Radiant
	Radiant (in-floor)
	Electric Wall Heat
	Space Heater
	Wall/Floor Furnace
	Forced Heat & Cool
	Heat Pump
	No Heating/Cooling

	Central Air
	Wood Furnace

(12) Electric

150	Amps Service

No./Qual. of Fixtures

	Ex.	X	Ord.		Min

No. of Elec. Outlets

	Many	X	Ave.		Few

(13) Plumbing

	Average Fixture(s)
1	3 Fixture Bath
	2 Fixture Bath
	Softener, Auto
	Softener, Manual
	Solar Water Heat
	No Plumbing
	Extra Toilet
	Extra Sink
	Separate Shower
	Ceramic Tile Floor
	Ceramic Tile Wains
	Ceramic Tub Alcove
	Vent Fan

(14) Water/Sewer

	Public Water
	Public Sewer
1	Water Well
1	1000 Gal Septic
	2000 Gal Septic

Lump Sum Items:

(15) Built-ins

	Appliance Allow.
	Cook Top
	Dishwasher
	Garbage Disposal
	Bath Heater
	Vent Fan
	Hot Tub
	Unvented Hood
	Vented Hood
	Intercom
	Jacuzzi Tub
	Jacuzzi repl.Tub
	Oven
	Microwave
	Standard Range
	Self Clean Range
	Sauna
	Trash Compactor
	Central Vacuum
	Security System

(15) Fireplaces

	Interior 1 Story
	Interior 2 Story
	2nd/Same Stack
	Two Sided
	Exterior 1 Story
	Exterior 2 Story
	Prefab 1 Story
	Prefab 2 Story
	Heat Circulator
	Raised Hearth
	Wood Stove
	Direct-Vented Gas

Class: D
Effec. Age: 5
Floor Area: 784
Total Base New : 110,340 E.C.F.
Total Depr Cost: 104,820 X 1.297
Estimated T.C.V: 135,952

(16) Porches/Decks

Area	Type
64	WGEP (1 Story)
44	4in Concrete

(17) Garage

Year Built:
Car Capacity:
Class: C
Exterior: Siding
Brick Ven.: 0
Stone Ven.: 0
Common Wall: 1 Wall
Foundation: 18 Inch
Finished ?:
Auto. Doors: 0
Mech. Doors: 0
Area: 308
% Good: 0
Storage Area: 0
No Conc. Floor: 832

Bsmnt Garage:

Carport Area:
Roof:

Cost Est. for Res. Bldg: 1 Single Family PLAIN Cls D Blt 0
(11) Heating System: Forced Air w/ Ducts
Ground Area = 784 SF Floor Area = 784 SF.
Phy/Ab.Phy/Func/Econ/Comb. % Good=95/100/100/100/95
Building Areas

Stories	Exterior	Foundation	Size	Cost New	Depr. Cost
1 Story	Siding	Slab	784		
			Total:	87,158	82,798
Other Additions/Adjustments					
Water/Sewer					
1000 Gal Septic			1	4,293	4,078
Water Well, 100 Feet			1	5,545	5,268
Porches					
WGEP (1 Story)			64	6,111	5,805
4in Concrete			44	293	278
Garages					
Class: C Exterior: Siding Foundation: 18 Inch (Unfinished)					
Base Cost			308	14,741	14,004
Common Wall: 1 Wall			1	-2,235	-2,123
No Concrete Floor			832	-5,566	-5,288
			Totals:	110,340	104,820

Notes:
ECF (RESIDENTIAL) 1.297 => TCV: 135,952

*** Information herein deemed reliable but not guaranteed***

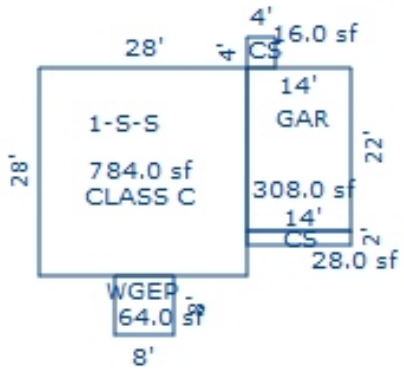

Sketch by Apex Sketch

*** Information herein deemed reliable but not guaranteed***

Parcel Number: 2410-23-4401-01 Jurisdiction: GREENWOOD TWP County: WEXFORD Printed on 02/15/2024

Grantor	Grantee	Sale Price	Sale Date	Inst. Type	Terms of Sale	Liber & Page	Verified By	Prcnt. Trans.
LLOYD, BEVERLY A LE ETAL	LABUDA, STEPHEN B & WHITNE	199,000	11/14/2022	MLC	09-FAMILY	694/790	DEED	0.0

Property Address

4721 E 10 RD

Owner's Name/Address

LABUDA, STEPHEN B & WHITNEY L
4721 E 10 RD
MANTON MI 49663

Tax Description

PAR A: PT OF SE 1/4 OF SE 1/4 DESC AS COM AT SE COR OF SD SEC: W 940.95 FT TO POB: CONT W 345.08 FT TO E 1/16TH LN; N02*26'45" E 1265.30 FT: E 346.06 FT: S02*26'41" W 1262.35 FT TO POB 10 AC M/L GW. SEC. 23 T24N R10W -MANTON- [[ASSESSED W/ 23-4101 '00 SPLIT ON 11/16/2022 FROM 2410-23-4401;

Comments/Influences

Split/Comb. on 11/16/2022 completed 11/16/2022 LINDA ;
Parent Parcel(s): 2410-23-4401;
Child Parcel(s): 2410-23-4101-01, 2410-23-4401-01, 2410-23-4401-02, 2410-23-4401-03;

The Equalizer. Copyright (c) 1999 - 2009. Licensed To: Township of Greenwood, County of Wexford, Michigan

Class: RESIDENTIAL-IMPROV Zoning:
School: MANTON CONSOLIDATED SCHOOLS
P.R.E. 100% 02/07/2023
:
2024 Est TCV 329,045 TCV/TFA: 192.76

Building Permit(s)	Date	Number	Status

X Improved | Vacant

Public Improvements

- Dirt Road
- Gravel Road
- Paved Road
- Storm Sewer
- Sidewalk
- Water
- Sewer
- Electric
- Gas
- Curb
- Street Lights
- Standard Utilities
- Underground Utils.

Topography of Site

- Level
- Rolling
- Low
- High
- Landscaped
- Swamp
- Wooded
- Pond
- Waterfront
- Ravine
- Wetland
- Flood Plain

Who When What

Land Value Estimates for Land Table 4010.LAND VALUES

Description	Frontage	Depth	* Factors * Front	Depth	Rate	%Adj.	Reason	Value
ACREAGE			10.000 Acres		4,635	100		46,350
			10.00 Total Acres		Total Est. Land Value =			46,350

Land Improvement Cost Estimates

Description	Rate	Size	% Good	Cash Value
D/W/P: Asphalt Paving	3.12	2580	44	3,542
Wood Frame	29.74	96	45	1,285
Wood Frame	29.04	100	45	1,307
Total Estimated Land Improvements True Cash Value =				6,134

Year	Land Value	Building Value	Assessed Value	Board of Review	Tribunal/ Other	Taxable Value
2024	23,200	141,300	164,500			4,612C
2023	13,000	115,900	128,900			4,393C
2022	0	0	0			0
2021	0	0	0			0

*** Information herein deemed reliable but not guaranteed***

Building Type

X	Single Family
	Mobile Home
	Town Home
	Duplex
	A-Frame
X	Wood Frame

Building Style: PLAIN

Yr Built	Remodeled
0	0

Condition: Good

Room List

	Basement
	1st Floor
	2nd Floor
	Bedrooms

(1) Exterior

	Wood/Shingle
X	Aluminum/Vinyl
	Brick
X	Insulation

(2) Windows

X	Many Avg. Few	X	Large Avg. Small

	Wood Sash
	Metal Sash
X	Vinyl Sash
	Double Hung
	Horiz. Slide
	Casement
	Double Glass
	Patio Doors
X	Storms & Screens

(3) Roof

X	Gable		Gambrel
	Hip		Mansard
	Flat		Shed

X	Asphalt Shingle

Chimney:

(3) Roof (cont.)

	Eavestrough
X	Insulation
0	Front Overhang
0	Other Overhang

(4) Interior

X	Drywall		Plaster
	Paneled		Wood T&G

Trim & Decoration

	Ex	X	Ord		Min

Size of Closets

	Lg	X	Ord		Small

Doors:		Solid	X	H.C.	

(5) Floors

Kitchen:
Other: Linoleum
Other: Carpeted

(6) Ceilings

X	Drywall

(7) Excavation

Basement: 1680 S.F.
Crawl: 0 S.F.
Slab: 0 S.F.
Height to Joists: 0.0

(8) Basement

	Conc. Block
	Poured Conc.
	Stone
	Treated Wood
	Concrete Floor

(9) Basement Finish

	Recreation SF
	Living SF
	Walkout Doors (B)
	No Floor SF
	Walkout Doors (A)

(10) Floor Support

Joists:
Unsupported Len:
Cntr.Sup:

(11) Heating/Cooling

X	Gas		Oil		Elec.
	Wood		Coal		Steam

	Forced Air w/o Ducts
X	Forced Air w/ Ducts
	Forced Hot Water
	Electric Baseboard
	Elec. Ceil. Radiant
	Radiant (in-floor)
	Electric Wall Heat
	Space Heater
	Wall/Floor Furnace
	Forced Heat & Cool
	Heat Pump
	No Heating/Cooling

	Central Air
	Wood Furnace

(12) Electric

150	Amps Service

No./Qual. of Fixtures

	Ex.	X	Ord.		Min

No. of Elec. Outlets

	Many	X	Ave.		Few

(13) Plumbing

2	Average Fixture(s)
	3 Fixture Bath
	2 Fixture Bath
	Softener, Auto
	Softener, Manual
	Solar Water Heat
	No Plumbing
	Extra Toilet
	Extra Sink
	Separate Shower
	Ceramic Tile Floor
	Ceramic Tile Wains
	Ceramic Tub Alcove
	Vent Fan

(14) Water/Sewer

	Public Water
	Public Sewer
1	Water Well
1	1000 Gal Septic
	2000 Gal Septic

Lump Sum Items:
2,280

(15) Built-ins

	Appliance Allow.
	Cook Top
	Dishwasher
	Garbage Disposal
	Bath Heater
	Vent Fan
	Hot Tub
	Unvented Hood
	Vented Hood
	Intercom
	Jacuzzi Tub
	Jacuzzi repl.Tub
	Oven
	Microwave
	Standard Range
	Self Clean Range
	Sauna
	Trash Compactor
	Central Vacuum
	Security System

(15) Fireplaces

	Interior 1 Story
	Interior 2 Story
	2nd/Same Stack
	Two Sided
	Exterior 1 Story
	Exterior 2 Story
	Prefab 1 Story
	Prefab 2 Story
	Heat Circulator
	Raised Hearth
	Wood Stove
	Direct-Vented Gas

Class: C
Effec. Age: 32
Floor Area: 1,707
Total Base New : 313,836 E.C.F.
Total Depr Cost: 213,231 X 1.297
Estimated T.C.V: 276,561

(16) Porches/Decks

Area	Type
192	CPP
140	WCP (1 Story)
140	Treated Wood

(17) Garage

Year Built:
Car Capacity:
Class: C
Exterior: Siding
Brick Ven.: 0
Stone Ven.: 0
Common Wall: 1 Wall
Foundation: 42 Inch
Finished ?:
Auto. Doors: 0
Mech. Doors: 0
Area: 576
% Good: 0
Storage Area: 0
No Conc. Floor: 0

Bsmnt Garage:

Carport Area:
Roof:

Cost Est. for Res. Bldg: 1 Single Family PLAIN Cls C Blt 0
(11) Heating System: Forced Air w/ Ducts
Ground Area = 1680 SF Floor Area = 1707 SF.
Phy/Ab.Phy/Func/Econ/Comb. % Good=68/100/100/100/68
Building Areas

Stories	Exterior	Foundation	Size	Cost New	Depr. Cost
1 Story	Siding	Basement	1,680		
1 Story	Siding	Overhang	27		
			Total:	241,587	164,280

Other Additions/Adjustments

Plumbing			
3 Fixture Bath	1	4,678	3,181
Water/Sewer			
1000 Gal Septic	1	4,899	3,331
Water Well, 100 Feet	1	5,849	3,977
Porches			
CPP	192	3,519	2,393
WCP (1 Story)	140	6,280	4,270
Deck			
Treated Wood	140	3,303	2,246
Garages			
Class: C Exterior: Siding Foundation: 42 Inch (Unfinished)			
Base Cost	576	24,981	16,987
Common Wall: 1 Wall	1	-2,705	-1,839
Class: C Exterior: Siding Foundation: 18 Inch (Unfinished)			
Base Cost	440	18,590	12,641
Local Cost Items			
POLE LEAN TO	140	735	323 *4
Lump Sum Items			
OLD BARN		2,052	1,395

<<<<< Calculations too long. See Valuation printout for complete pricing. >>>>>

*** Information herein deemed reliable but not guaranteed***

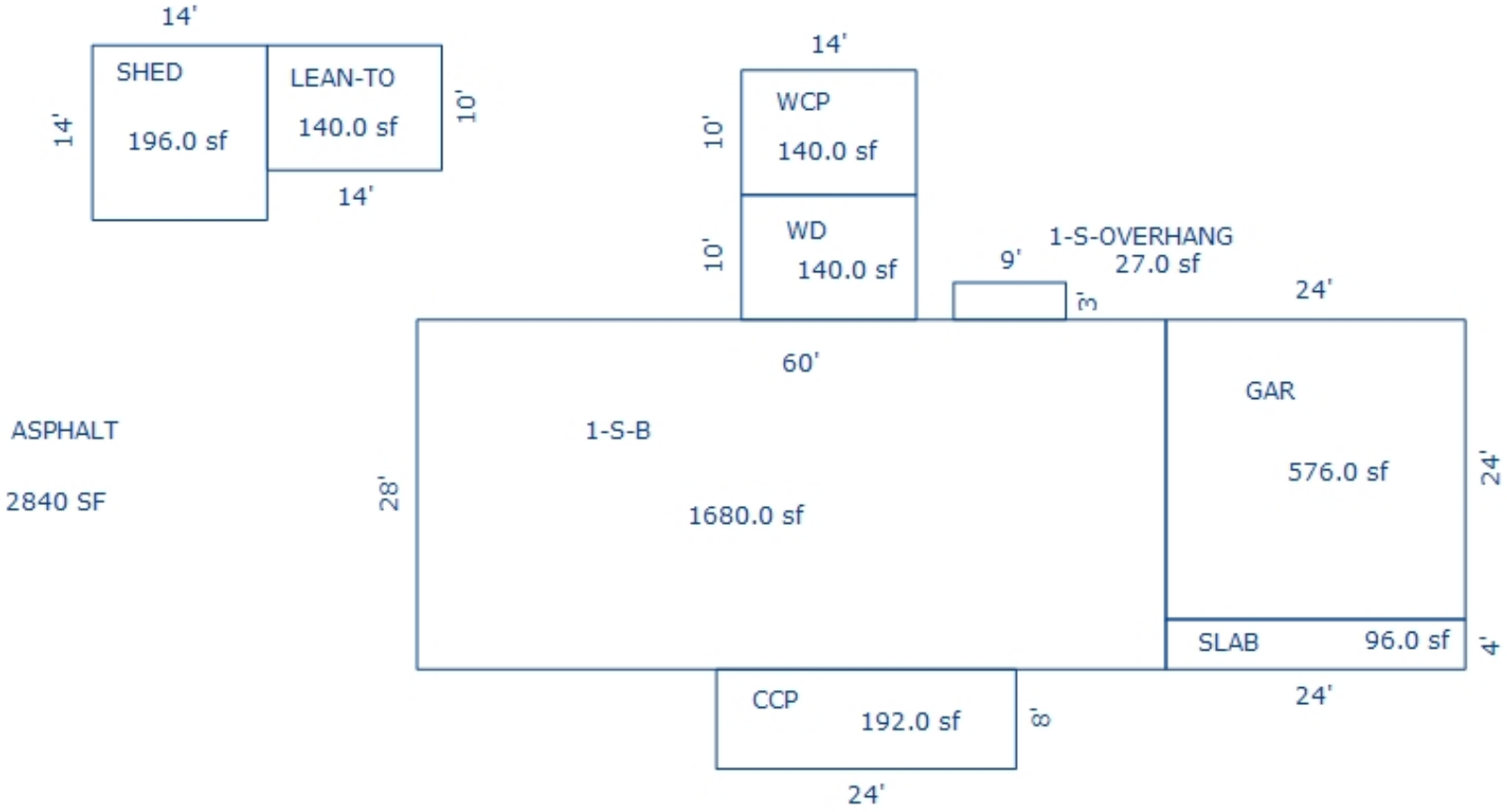

*** Information herein deemed reliable but not guaranteed***

Parcel Number: 2410-23-4401-02 Jurisdiction: GREENWOOD TWP County: WEXFORD Printed on 02/15/2024

Grantor	Grantee	Sale Price	Sale Date	Inst. Type	Terms of Sale	Liber & Page	Verified By	Prcnt. Trans.

Property Address	Class: RESIDENTIAL-VACANT	Zoning:	Building Permit(s)	Date	Number	Status
4721 E 10 RD	School: MANTON CONSOLIDATED SCHOOLS					
	P.R.E. 0%					
Owner's Name/Address	:					
LLOYD, BEVERLY A LE ETAL 4678 EASTPORT LANDING DR LITTLE RIVER SC 29566-9918	2024 Est TCV 46,350					

Improved | X | Vacant

Land Value Estimates for Land Table 4010.LAND VALUES

Description	Frontage	Depth	* Factors * Front	Depth	Rate	%Adj.	Reason	Value
ACREAGE			10.000 Acres		4,635	100		46,350
			10.00 Total Acres		Total Est. Land Value =			46,350

Tax Description

GW. SEC. 23 T24N R10W -MANTON- [[ASSESSED W/ 23-4101 '00
SPLIT ON 11/16/2022 FROM 2410-23-4401;
PAR B : PT OF SE 1/4 OF SE 1/4 DESC AS COM AT SE COR OF SD SEC; W 643.50 FT TO POB; CONT W 297.45 GY ; N02*26'41"E 1262.35 FT; E 362.35 FT E 362.06 FT; S03*23'12"W 1098 FT;W 51.21 FT; S 165 FT TO POB 10 AC M/L

Public Improvements

- Dirt Road
- Gravel Road
- Paved Road
- Storm Sewer
- Sidewalk
- Water
- Sewer
- Electric
- Gas
- Curb
- Street Lights
- Standard Utilities
- Underground Utils.

Topography of Site

- Level
- Rolling
- Low
- High
- Landscaped
- Swamp
- Wooded
- Pond
- Waterfront
- Ravine
- Wetland
- Flood Plain

Comments/Influences

Split/Comb. on 11/16/2022 completed 11/16/2022 LINDA ;
Parent Parcel(s): 2410-23-4401;
Child Parcel(s): 2410-23-4101-01, 2410-23-4401-01, 2410-23-4401-02, 2410-23-4401-03;

Who When What

Year	Land Value	Building Value	Assessed Value	Board of Review	Tribunal/ Other	Taxable Value
2024	23,200	0	23,200			4,612C
2023	13,000	0	13,000		13,000A	4,393C
2022	0	0	0			0
2021	0	0	0			0

The Equalizer. Copyright (c) 1999 - 2009. Licensed To: Township of Greenwood, County of Wexford, Michigan

*** Information herein deemed reliable but not guaranteed***

Parcel Number: 2410-23-4401-03 Jurisdiction: GREENWOOD TWP County: WEXFORD Printed on 02/15/2024

Grantor	Grantee	Sale Price	Sale Date	Inst. Type	Terms of Sale	Liber & Page	Verified By	Prcnt. Trans.

Property Address	Class: RESIDENTIAL-VACANT	Zoning:	Building Permit(s)	Date	Number	Status
4721 E 10 RD	School: MANTON CONSOLIDATED SCHOOLS					
	P.R.E. 0%					
Owner's Name/Address	:					
LLOYD, BEVERLY A LE ETAL 4678 EASTPORT LANDING DR LITTLE RIVER SC 29566-9918	2024 Est TCV 52,704					

Improved | X | Vacant

Land Value Estimates for Land Table 4010.LAND VALUES

Description	Frontage	Depth	* Factors * Front	Depth	Rate	%Adj.	Reason	Value
ACREAGE			16.470 Acres		3,200	100		52,704
			16.47 Total Acres		Total Est. Land Value =			52,704

Public Improvements

- Dirt Road
- Gravel Road
- Paved Road
- Storm Sewer
- Sidewalk
- Water
- Sewer
- Electric
- Gas
- Curb
- Street Lights
- Standard Utilities
- Underground Utils.

Topography of Site

- Level
- Rolling
- Low
- High
- Landscaped
- Swamp
- Wooded
- Pond
- Waterfront
- Ravine
- Wetland
- Flood Plain

Tax Description

GW. SEC. 23 T24N R10W -MANTON- [[ASSESSED W/ 23-4101 '00
SPLIT ON 11/16/2022 FROM 2410-23-4401; PAR C PT OF SE 1/4 OF SE 1/4 DESC AS COM ATSE COR OF SD SEC; W511.50 FT; N 165 FT; W 80.79 FT N03*23'12"E 1098 FT; E 578.41 FT; S02*25'23"W 1262.50 FT TO POB 16.47 AC M/L

Comments/Influences

Split/Comb. on 11/16/2022 completed 11/16/2022 LINDA ;
Parent Parcel(s): 2410-23-4401;
Child Parcel(s): 2410-23-4101-01, 2410-23-4401-01, 2410-23-4401-02, 2410-23-4401-03;

Who When What

Year	Land Value	Building Value	Assessed Value	Board of Review	Tribunal/ Other	Taxable Value
2024	26,400	0	26,400			7,668C
2023	21,400	0	21,400		21,400A	7,303C
2022	0	0	0			0
2021	0	0	0			0

The Equalizer. Copyright (c) 1999 - 2009. Licensed To: Township of Greenwood, County of Wexford, Michigan

*** Information herein deemed reliable but not guaranteed***

Parcel Number: 2410-23-4402 Jurisdiction: GREENWOOD TWP County: WEXFORD Printed on 02/15/2024

Grantor	Grantee	Sale Price	Sale Date	Inst. Type	Terms of Sale	Liber & Page	Verified By	Prcnt. Trans.

Property Address	Class: COMMERCIAL-VACANT	Zoning:	Building Permit(s)	Date	Number	Status
4851 E 10 RD	School: MANTON CONSOLIDATED SCHOOLS					
	P.R.E. 0%					
Owner's Name/Address	:					
GREENWOOD BIBLE CHURCH C/O SEC. TREAS MANTON MI 49663	2024 Est TCV 0					

	Improved	X	Vacant

	Public Improvements
	Dirt Road
X	Gravel Road
X	Paved Road
	Storm Sewer
	Sidewalk
	Water
	Sewer
X	Electric
	Gas
	Curb
	Street Lights
	Standard Utilities
	Underground Utils.

	Topography of Site
	Level
X	Rolling
	Low
	High
	Landscaped
	Swamp
X	Wooded
	Pond
	Waterfront
	Ravine
	Wetland
	Flood Plain
X	PINES/OPEN

Who	When	What
GLA	05/30/2017	INSPECTION

Land Value Estimates for Land Table 4010.LAND VALUES

Description	Frontage	Depth	* Factors * Front	Depth	Rate	%Adj.	Reason	Value
ACREAGE			0.400 Acres		10,953	100		4,381
ROW			0.100 Acres		0	100		0
			0.50 Total Acres		Total Est. Land Value =			4,381

Year	Land Value	Building Value	Assessed Value	Board of Review	Tribunal/ Other	Taxable Value
2024	EXEMPT	EXEMPT	EXEMPT			EXEMPT
2023	EXEMPT	EXEMPT	EXEMPT			EXEMPT
2022	0	0	0			0
2021	0	0	0			0

Tax Description

A PAR COM 31 RDS W OF SE COR OF SEC 23 AS A POB: N 10 RDS; W 8 RDS; S 10 RDS; E TO POB. --.5 A M/L-- GW. SEC. 23 T24N R10W -MANTON-

Comments/Influences

The Equalizer. Copyright (c) 1999 - 2009. Licensed To: Township of Greenwood, County of Wexford, Michigan

*** Information herein deemed reliable but not guaranteed***

Parcel Number: 2410-24-1101 Jurisdiction: GREENWOOD TWP County: WEXFORD Printed on 02/15/2024

Grantor	Grantee	Sale Price	Sale Date	Inst. Type	Terms of Sale	Liber & Page	Verified By	Prcnt. Trans.

Property Address	Class: AGRICULTURAL-VACAN	Zoning:	Building Permit(s)	Date	Number	Status
	School: MANTON CONSOLIDATED SCHOOLS					
Owner's Name/Address	P.R.E. 0%					
	:					
STATE OF MICHIGAN P O BOX 30735 GRANTS ADMINISTRATION LANSING MI 48909-8235	2024 Est TCV 0					

Tax Description

N 1/2 OF N 1/2 & SE 1/4 OF SW 1/4 OF SW 1/4 --170 A.-- GW. SEC. 24 T24N R10W -MANTON-

Comments/Influences

The Equalizer. Copyright (c) 1999 - 2009. Licensed To: Township of Greenwood, County of Wexford, Michigan

	Improved	X	Vacant

	Public Improvements
	Dirt Road
X	Gravel Road
	Paved Road
	Storm Sewer
	Sidewalk
	Water
	Sewer
X	Electric
	Gas
	Curb
	Street Lights
	Standard Utilities
	Underground Utils.

	Topography of Site
X	Level
X	Rolling
	Low
	High
	Landscaped
	Swamp
X	Wooded
	Pond
	Waterfront
	Ravine
	Wetland
	Flood Plain
X	PINES/OPEN

Who	When	What
GLA	05/30/2017	INSPECTION

Land Value Estimates for Land Table 4010.LAND VALUES

Description	Frontage	Depth	* Factors * Front	Depth	Rate	%Adj.	Reason	Value
ACREAGE			167.878 Acres		2,480	100		416,337
			2.121 Acres		0	100		0
			170.00 Total Acres		Total Est. Land Value =			416,337

Year	Land Value	Building Value	Assessed Value	Board of Review	Tribunal/ Other	Taxable Value
2024	EXEMPT	EXEMPT	EXEMPT			EXEMPT
2023	EXEMPT	EXEMPT	EXEMPT			EXEMPT
2022	0	0	0			0
2021	0	0	0			0

*** Information herein deemed reliable but not guaranteed***

Parcel Number: 2410-24-1301 Jurisdiction: GREENWOOD TWP County: WEXFORD Printed on 02/15/2024

Grantor	Grantee	Sale Price	Sale Date	Inst. Type	Terms of Sale	Liber & Page	Verified By	Prcnt. Trans.
MANOOGIAN, SHIRLEY	MANOOGIAN ESTHER M & ETA	0	11/10/2023	QC	15-LADY BIRD	696/1322	PROPERTY TRANSFER	0.0

Property Address

Owner's Name/Address

MANOOGIAN, SHIRLEY
TRUST
5669 SUTTERS LANE
BLOOMFIELD HILLS MI 48301

Tax Description

S 1/2 OF NE 1/4 80 A. GW. SEC. 24 T24N R10W -MANTON-

Comments/Influences

The Equalizer. Copyright (c) 1999 - 2009. Licensed To: Township of Greenwood, County of Wexford, Michigan

Class: RESIDENTIAL-IMPROV Zoning:

School: MANTON CONSOLIDATED SCHOOLS

P.R.E. 0%

:

2024 Est TCV 207,197 TCV/TFA: 721.94

Building Permit(s)	Date	Number	Status

X Improved | Vacant

	Public Improvements
	Dirt Road
X	Gravel Road
	Paved Road
	Storm Sewer
	Sidewalk
	Water
	Sewer
X	Electric
	Gas
	Curb
	Street Lights
	Standard Utilities
	Underground Utils.

	Topography of Site
	Level
X	Rolling
	Low
	High
	Landscaped
	Swamp
X	Wooded
	Pond
	Waterfront
	Ravine
	Wetland
	Flood Plain
X	PINES/OPEN

Who	When	What
GLA	05/30/2017	INSPECTION

Land Value Estimates for Land Table 4010.LAND VALUES

Description	Frontage	Depth	* Factors * Front	Depth	Rate	%Adj.	Reason	Value
	1600.00	0.00	1.0000	1.0000	0	100		0
ACREAGE			79.000 Acres		2,544	100		201,002
ROW			1.000 Acres		0	100		0

1600 Actual Front Feet, 80.00 Total Acres Total Est. Land Value = 201,002

Land Improvement Cost Estimates

Description	Rate	Size	% Good	Cash Value
Wood Frame	39.52	32	44	557

Total Estimated Land Improvements True Cash Value = 557

Year	Land Value	Building Value	Assessed Value	Board of Review	Tribunal/ Other	Taxable Value
2024	100,500	3,100	103,600			39,322C
2023	85,100	2,600	87,700			37,450C
2022	73,600	2,100	75,700			35,667C
2021	67,800	2,100	69,900			34,528C

*** Information herein deemed reliable but not guaranteed***

Building Type

X	Single Family
	Mobile Home
	Town Home
	Duplex
	A-Frame
X	Wood Frame

Building Style: PLAIN

Yr Built	Remodeled
0	0

Condition: Good

Room List

	Basement
	1st Floor
	2nd Floor
	Bedrooms

(1) Exterior

X	Wood/Shingle
	Aluminum/Vinyl
	Brick
X	Insulation

(2) Windows

X	Many		Large
	Avg.	X	Avg.
	Few		Small

	Wood Sash
	Metal Sash
X	Vinyl Sash
	Double Hung
	Horiz. Slide
	Casement
	Double Glass
	Patio Doors
X	Storms & Screens

(3) Roof

X	Gable		Gambrel
	Hip		Mansard
	Flat		Shed

X	Asphalt Shingle

Chimney:

(3) Roof (cont.)

	Eavestrough
X	Insulation
0	Front Overhang
0	Other Overhang

(4) Interior

X	Drywall		Plaster
	Paneled		Wood T&G

Trim & Decoration

	Ex	X	Ord		Min

Size of Closets

	Lg	X	Ord		Small

Doors:		Solid	X	H.C.	

(5) Floors

Kitchen:
Other: Linoleum
Other: Carpeted

(6) Ceilings

X	Drywall		

(7) Excavation

Basement: 0 S.F.
Crawl: 287 S.F.
Slab: 0 S.F.
Height to Joists: 0.0

(8) Basement

	Conc. Block
	Poured Conc.
	Stone
	Treated Wood
	Concrete Floor

(9) Basement Finish

	Recreation SF
	Living SF
	Walkout Doors (B)
	No Floor SF
	Walkout Doors (A)

(10) Floor Support

Joists:
Unsupported Len:
Cntr.Sup:

(11) Heating/Cooling

X	Gas		Oil		Elec.
	Wood		Coal		Steam

	Forced Air w/o Ducts
X	Forced Air w/ Ducts
	Forced Hot Water
	Electric Baseboard
	Elec. Ceil. Radiant
	Radiant (in-floor)
	Electric Wall Heat
	Space Heater
	Wall/Floor Furnace
	Forced Heat & Cool
	Heat Pump
	No Heating/Cooling

	Central Air
	Wood Furnace

(12) Electric

150	Amps Service

No./Qual. of Fixtures

	Ex.	X	Ord.		Min

No. of Elec. Outlets

	Many	X	Ave.		Few

(13) Plumbing

1	Average Fixture(s)
	3 Fixture Bath
	2 Fixture Bath
	Softener, Auto
	Softener, Manual
	Solar Water Heat
	No Plumbing
	Extra Toilet
	Extra Sink
	Separate Shower
	Ceramic Tile Floor
	Ceramic Tile Wains
	Ceramic Tub Alcove
	Vent Fan

(14) Water/Sewer

	Public Water
	Public Sewer
	Water Well
	1000 Gal Septic
	2000 Gal Septic

Lump Sum Items:

(15) Built-ins

	Appliance Allow.
	Cook Top
	Dishwasher
	Garbage Disposal
	Bath Heater
	Vent Fan
	Hot Tub
	Unvented Hood
	Vented Hood
	Intercom
	Jacuzzi Tub
	Jacuzzi repl.Tub
	Oven
	Microwave
	Standard Range
	Self Clean Range
	Sauna
	Trash Compactor
	Central Vacuum
	Security System

(15) Fireplaces

	Interior 1 Story
	Interior 2 Story
	2nd/Same Stack
	Two Sided
	Exterior 1 Story
	Exterior 2 Story
	Prefab 1 Story
	Prefab 2 Story
	Heat Circulator
	Raised Hearth
	Wood Stove
	Direct-Vented Gas

Class: CD
Effec. Age: 61
Floor Area: 287
Total Base New : 38,643 E.C.F.
Total Depr Cost: 4,347 X 1.297
Estimated T.C.V: 5,638

(16) Porches/Decks

Area	Type

(17) Garage

Year Built:
Car Capacity:
Class:
Exterior:
Brick Ven.:
Stone Ven.:
Common Wall:
Foundation:
Finished ?:
Auto. Doors:
Mech. Doors:
Area:
% Good:
Storage Area:
No Conc. Floor:

Bsmnt Garage:

Carport Area:
Roof:

Cost Est. for Res. Bldg: 1 Single Family PLAIN Cls CD Blt 0
(11) Heating System: Forced Air w/ Ducts
Ground Area = 287 SF Floor Area = 287 SF.
Phy/Ab.Phy/Func/Econ/Comb. % Good=45/25/100/100/11.25
Building Areas

Stories	Exterior	Foundation	Size	Cost New	Depr. Cost
1 Story	Siding	Crawl Space	287		
			Total:	38,643	4,347

Other Additions/Adjustments

Totals:	38,643	4,347

Notes:

ECF (RESIDENTIAL) 1.297 => TCV: 5,638

*** Information herein deemed reliable but not guaranteed***

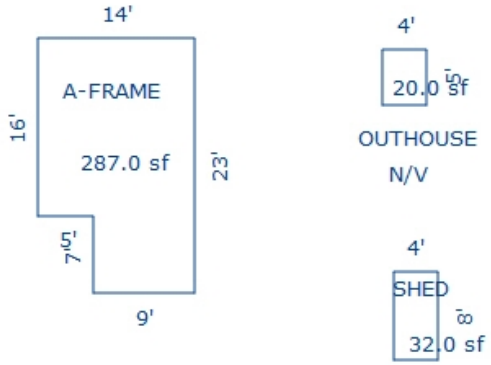

Sketch by Apex Sketch

*** Information herein deemed reliable but not guaranteed***

Parcel Number: 2410-24-2301-01 Jurisdiction: GREENWOOD TWP County: WEXFORD Printed on 02/15/2024

Grantor	Grantee	Sale Price	Sale Date	Inst. Type	Terms of Sale	Liber & Page	Verified By	Prcnt. Trans.

Property Address	Class: RESIDENTIAL-IMPROV	Zoning:	Building Permit(s)	Date	Number	Status
8584 N 35 RD	School: MANTON CONSOLIDATED SCHOOLS					
	P.R.E. 0%					
Owner's Name/Address	:					
BEIMERS, BRIAN LINDA J 14921 KELLY ST SPRING LAKE MI 49456	2024 Est TCV 86,963 TCV/TFA: 119.45					

X Improved | Vacant

Land Value Estimates for Land Table 4010.LAND VALUES

Description	Frontage	Depth	* Factors * Front	Depth	Rate	%Adj.	Reason	Value
ACREAGE			0.892 Acres		10,953	100		9,770
			0.108 Acres		2	100		0
			1.00 Total Acres		Total Est. Land Value =			9,770

Land Improvement Cost Estimates

Description	Rate	Size	% Good	Cash Value
Wood Frame	24.42	240	40	2,344
Total Estimated Land Improvements True Cash Value =				2,344

Tax Description

W 143 FT OF S 305 FT OF S 1/2 OF S 1/2 OF NW 1/4 1 A. GW. SEC. 24 T24N R10W -MANTON-
SPLIT/COMBINED ON 01/14/2019 FROM 2410-24-2301;

Comments/Influences

Split/Comb. on 01/14/2019 completed 01/14/2019 LINDA ;
Parent Parcel(s): 2410-24-2301;
Child Parcel(s): 2410-24-2301-02, 2410-24-2301-01;

The Equalizer. Copyright (c) 1999 - 2009. Licensed To: Township of Greenwood, County of Wexford, Michigan

Public Improvements

- Dirt Road
- Gravel Road
- Paved Road
- Storm Sewer
- Sidewalk
- Water
- Sewer
- Electric
- Gas
- Curb
- Street Lights
- Standard Utilities
- Underground Utils.

Topography of Site

- Level
- Rolling
- Low
- High
- Landscaped
- Swamp
- Wooded
- Pond
- Waterfront
- Ravine
- Wetland
- Flood Plain

Who	When	What
JB	10/23/2023	INSPECTION
GLA	05/13/2021	INSPECTION

Year	Land Value	Building Value	Assessed Value	Board of Review	Tribunal/ Other	Taxable Value
2024	4,900	38,600	43,500			20,163C
2023	2,700	31,200	33,900			19,203C
2022	2,200	26,100	28,300	26,800M		18,289C
2021	2,700	33,800	36,500			24,478C

*** Information herein deemed reliable but not guaranteed***

Building Type

X	Single Family
	Mobile Home
	Town Home
	Duplex
	A-Frame
X	Wood Frame

Building Style: PLAIN

Yr Built	Remodeled
0	0

Condition: Poor

Room List

	Basement
	1st Floor
	2nd Floor
2	Bedrooms

(1) Exterior

X	Wood/Shingle
	Aluminum/Vinyl
	Brick
	Insulation

(2) Windows

X	Many Avg. Few	X	Large Avg. Small

X	Wood Sash
	Metal Sash
	Vinyl Sash
X	Double Hung
X	Horiz. Slide
	Casement
	Double Glass
	Patio Doors
	Storms & Screens

(3) Roof

X	Gable		Gambrel
	Hip		Mansard
	Flat		Shed

X	Asphalt Shingle

Chimney: Block

(3) Roof (cont.)

	Eavestrough
	Insulation
0	Front Overhang
0	Other Overhang

(4) Interior

	Drywall Paneled		Plaster Wood T&G

Trim & Decoration

	Ex		Ord		Min

Size of Closets

	Lg		Ord		Small

Doors: | | Solid | | H.C.

(5) Floors

Kitchen:
Other:
Other:

(6) Ceilings

(7) Excavation

Basement: 0 S.F.
Crawl: 320 S.F.
Slab: 408 S.F.
Height to Joists: 0.0

(8) Basement

	Conc. Block
	Poured Conc.
	Stone
	Treated Wood
	Concrete Floor

(9) Basement Finish

	Recreation SF
	Living SF
	Walkout Doors (B)
	No Floor SF
	Walkout Doors (A)

(10) Floor Support

Joists:
Unsupported Len:
Cntr.Sup:

(11) Heating/Cooling

X	Gas		Oil		Elec.
	Wood		Coal		Steam

	Forced Air w/o Ducts
X	Forced Air w/ Ducts
	Forced Hot Water
	Electric Baseboard
	Elec. Ceil. Radiant
	Radiant (in-floor)
	Electric Wall Heat
	Space Heater
	Wall/Floor Furnace
	Forced Heat & Cool
	Heat Pump
	No Heating/Cooling

	Central Air
	Wood Furnace

(12) Electric

0	Amps Service

No./Qual. of Fixtures

	Ex.		Ord.		Min

No. of Elec. Outlets

	Many		Ave.		Few

(13) Plumbing

1	Average Fixture(s)
	3 Fixture Bath
	2 Fixture Bath
	Softener, Auto
	Softener, Manual
	Solar Water Heat
	No Plumbing
	Extra Toilet
	Extra Sink
	Separate Shower
	Ceramic Tile Floor
	Ceramic Tile Wains
	Ceramic Tub Alcove
	Vent Fan

(14) Water/Sewer

	Public Water
	Public Sewer
1	Water Well
1	1000 Gal Septic
	2000 Gal Septic

Lump Sum Items:

(15) Built-ins

	Appliance Allow.
	Cook Top
	Dishwasher
	Garbage Disposal
	Bath Heater
	Vent Fan
	Hot Tub
	Unvented Hood
	Vented Hood
	Intercom
	Jacuzzi Tub
	Jacuzzi repl.Tub
	Oven
	Microwave
	Standard Range
	Self Clean Range
	Sauna
	Trash Compactor
	Central Vacuum
	Security System

(15) Fireplaces

	Interior 1 Story
	Interior 2 Story
	2nd/Same Stack
	Two Sided
	Exterior 1 Story
	Exterior 2 Story
	Prefab 1 Story
	Prefab 2 Story
	Heat Circulator
	Raised Hearth
	Wood Stove
	Direct-Vented Gas

Class: D
Effec. Age: 63
Floor Area: 728
Total Base New : 128,244 E.C.F.
Total Depr Cost: 57,709 X 1.297
Estimated T.C.V: 74,849

(16) Porches/Decks

Area	Type
128	WGEP (1 Story)
60	WPP
90	WCP (1 Story)

(17) Garage

Year Built:
Car Capacity:
Class: D
Exterior: Siding
Brick Ven.: 0
Stone Ven.: 0
Common Wall: 1 Wall
Foundation: 18 Inch
Finished ?:
Auto. Doors: 0
Mech. Doors: 0
Area: 440
% Good: 0
Storage Area: 0
No Conc. Floor: 0

Bsmnt Garage:

Carport Area:
Roof:

Cost Est. for Res. Bldg: 1 Single Family PLAIN Cls D Blt 0
(11) Heating System: Forced Air w/ Ducts
Ground Area = 728 SF Floor Area = 728 SF.
Phy/Ab.Phy/Func/Econ/Comb. % Good=45/100/100/100/45
Building Areas

Stories	Exterior	Foundation	Size	Cost New	Depr. Cost
1 Story	Siding	Slab	280		
1 Story	Siding	Crawl Space	320		
1 Story	Siding	Slab	128		
			Total:	83,104	37,397
Other Additions/Adjustments					
Water/Sewer					
1000 Gal Septic			1	4,293	1,932
Water Well, 100 Feet			1	5,545	2,495
Porches					
WGEP (1 Story)			128	9,620	4,329
WPP			60	1,872	842
WCP (1 Story)			90	3,707	1,668
Garages					
Class: D Exterior: Siding Foundation: 18 Inch (Unfinished)					
Base Cost			440	14,212	6,395
Common Wall: 1 Wall			1	-1,857	-836
Class: D Exterior: Pole (Unfinished)					
Base Cost			260	7,748	3,487
			Totals:	128,244	57,709

Notes:
ECF (RESIDENTIAL) 1.297 => TCV: 74,849

*** Information herein deemed reliable but not guaranteed***

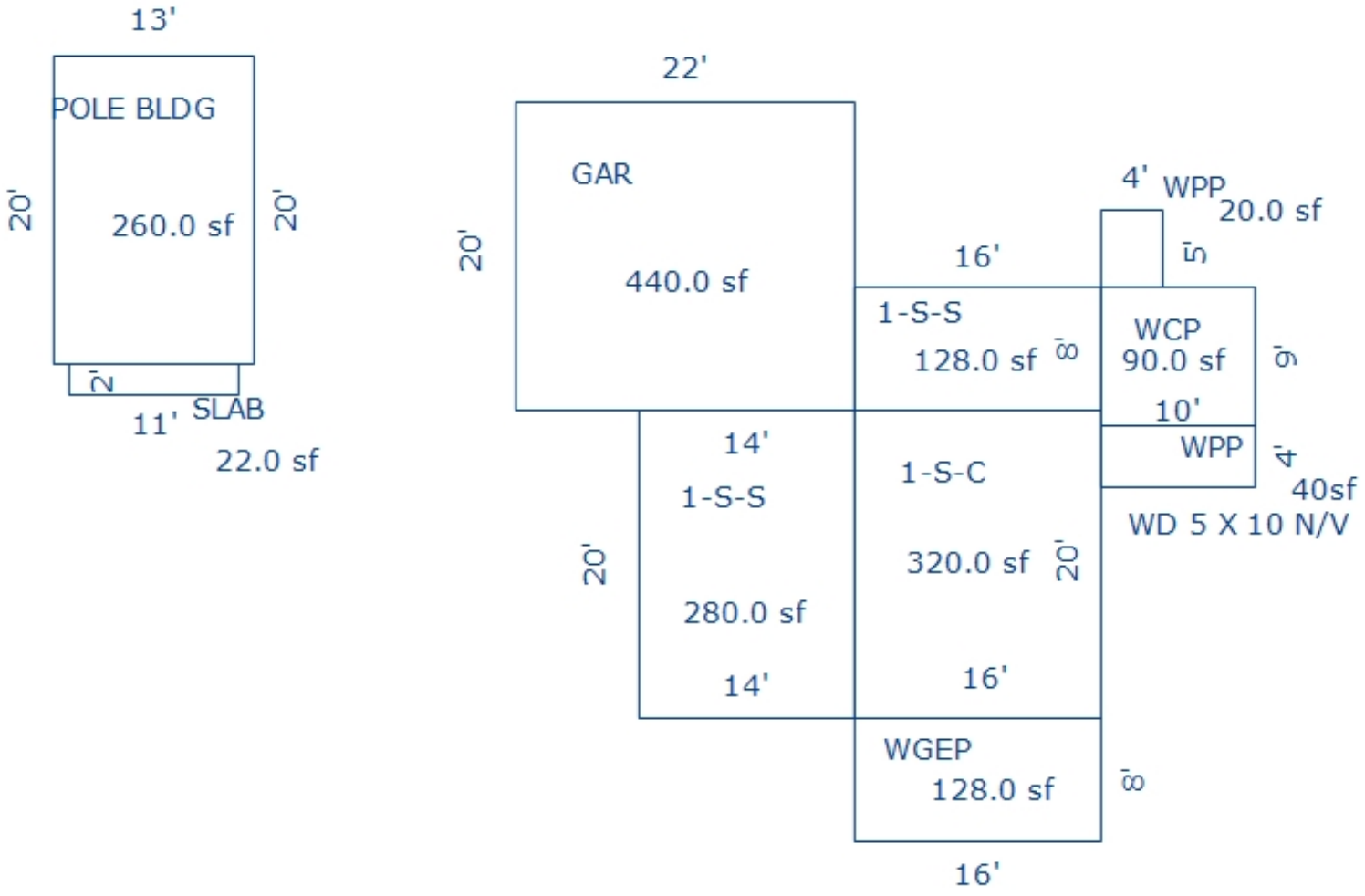

*** Information herein deemed reliable but not guaranteed***

Parcel Number: 2410-24-2301-02 Jurisdiction: GREENWOOD TWP County: WEXFORD Printed on 02/15/2024

Grantor	Grantee	Sale Price	Sale Date	Inst. Type	Terms of Sale	Liber & Page	Verified By	Prcnt. Trans.

Property Address	Class: RESIDENTIAL-IMPROV	Zoning:	Building Permit(s)	Date	Number	Status
8542 N 35 RD	School: MANTON CONSOLIDATED SCHOOLS		Pole Barn	10/07/2020	PB20-0174	ENTERED
	P.R.E. 0%					
Owner's Name/Address	:					
	2024 Est TCV 430,629 TCV/TFA: 284.81					

BEIMERS, BRIAN
LINDA J
14921 KELLY ST
SPRING LAKE MI 49456

X Improved | Vacant

Public Improvements

- Dirt Road
- Gravel Road
- Paved Road
- Storm Sewer
- Sidewalk
- Water
- Sewer
- Electric
- Gas
- Curb
- Street Lights
- Standard Utilities
- Underground Utils.

Topography of Site

- Level
- Rolling
- Low
- High
- Landscaped
- Swamp
- Wooded
- Pond
- Waterfront
- Ravine
- Wetland
- Flood Plain

Tax Description

S 1/2 OF S 1/2 OF NW 1/4 EXC THE W 143 FT OF S 305 FT. 39 A. GW. SEC. 24 T24N R10W -MANTON-
SPLIT/COMBINED ON 01/14/2019 FROM 2410-24-2301;

Comments/Influences

Split/Comb. on 01/14/2019 completed 01/14/2019 LINDA ;
Parent Parcel(s): 2410-24-2301;
Child Parcel(s): 2410-24-2301-02, 2410-24-2301-01;

Who	When	What
JB	10/23/2023	INSPECTION
GLA	05/13/2021	INSPECTION

Land Value Estimates for Land Table 4010.LAND VALUES

Description	Frontage	Depth	* Factors * Front	Depth	Rate	%Adj.	Reason	Value
ACREAGE			38.108 Acres		2,722	100		103,730
			0.892 Acres		0	100		0
			39.00 Total Acres		Total Est. Land Value =			103,730

Land Improvement Cost Estimates

Description	Rate	Size	% Good	Cash Value
D/W/P: 3.5 Concrete	6.21	275	96	1,640
D/W/P: 3.5 Concrete	6.21	456	0	0
Total Estimated Land Improvements True Cash Value =				1,640

Year	Land Value	Building Value	Assessed Value	Board of Review	Tribunal/ Other	Taxable Value
2024	51,900	163,400	215,300			182,243C
2023	46,000	150,400	196,400			173,565C
2022	36,800	126,500	163,300	165,300M		165,300S
2021	32,700	109,700	142,400			140,626C

The Equalizer. Copyright (c) 1999 - 2009. Licensed To: Township of Greenwood, County of Wexford, Michigan

*** Information herein deemed reliable but not guaranteed***

Building Type

X	Single Family
	Mobile Home
	Town Home
	Duplex
	A-Frame
X	Wood Frame

Building Style: PLAIN

Yr Built	Remodeled
0	0

Condition: Good

Room List

	Basement
	1st Floor
	2nd Floor
	Bedrooms

(1) Exterior

	Wood/Shingle
X	Aluminum/Vinyl
	Brick
X	Insulation

(2) Windows

X	Many		Large
	Avg.	X	Avg.
	Few		Small

	Wood Sash
	Metal Sash
X	Vinyl Sash
	Double Hung
	Horiz. Slide
	Casement
	Double Glass
	Patio Doors
X	Storms & Screens

(3) Roof

X	Gable		Gambrel
	Hip		Mansard
	Flat		Shed

X	Asphalt Shingle

Chimney:

(3) Roof (cont.)

	Eavestrough
X	Insulation
0	Front Overhang
0	Other Overhang

(4) Interior

X	Drywall		Plaster
	Paneled		Wood T&G

Trim & Decoration

	Ex	X	Ord		Min

Size of Closets

	Lg	X	Ord		Small

Doors:		Solid	X	H.C.	

(5) Floors

Kitchen:
Other: Linoleum
Other: Carpeted

(6) Ceilings

X	Drywall		

(7) Excavation

Basement: 1512 S.F.
Crawl: 0 S.F.
Slab: 0 S.F.
Height to Joists: 0.0

(8) Basement

	Conc. Block
	Poured Conc.
	Stone
	Treated Wood
	Concrete Floor

(9) Basement Finish

	Recreation SF
	Living SF
	Walkout Doors (B)
	No Floor SF
	Walkout Doors (A)

(10) Floor Support

Joists:
Unsupported Len:
Cntr.Sup:

(11) Heating/Cooling

X	Gas		Oil		Elec.
	Wood		Coal		Steam

	Forced Air w/o Ducts
	Forced Air w/ Ducts
	Forced Hot Water
	Electric Baseboard
	Elec. Ceil. Radiant
	Radiant (in-floor)
	Electric Wall Heat
	Space Heater
	Wall/Floor Furnace
X	Forced Heat & Cool
	Heat Pump
	No Heating/Cooling

	Central Air
	Wood Furnace

(12) Electric

150	Amps Service

No./Qual. of Fixtures

	Ex.	X	Ord.		Min

No. of Elec. Outlets

	Many	X	Ave.		Few

(13) Plumbing

	Average Fixture(s)
1	3 Fixture Bath
	2 Fixture Bath
	Softener, Auto
	Softener, Manual
	Solar Water Heat
	No Plumbing
	Extra Toilet
	Extra Sink
	Separate Shower
	Ceramic Tile Floor
	Ceramic Tile Wains
	Ceramic Tub Alcove
	Vent Fan

(14) Water/Sewer

	Public Water
	Public Sewer
	Water Well
1	1000 Gal Septic
	2000 Gal Septic

Lump Sum Items:

(15) Built-ins

	Appliance Allow.
	Cook Top
	Dishwasher
	Garbage Disposal
	Bath Heater
	Vent Fan
	Hot Tub
	Unvented Hood
	Vented Hood
	Intercom
	Jacuzzi Tub
	Jacuzzi repl.Tub
	Oven
	Microwave
	Standard Range
	Self Clean Range
	Sauna
	Trash Compactor
	Central Vacuum
	Security System

(15) Fireplaces

	Interior 1 Story
	Interior 2 Story
	2nd/Same Stack
	Two Sided
	Exterior 1 Story
	Exterior 2 Story
	Prefab 1 Story
	Prefab 2 Story
	Heat Circulator
	Raised Hearth
	Wood Stove
	Direct-Vented Gas

Class: CD
Effec. Age: 7
Floor Area: 1,512
Total Base New : 269,653 E.C.F.
Total Depr Cost: 250,778 X 1.297
Estimated T.C.V: 325,259

(16) Porches/Decks

Area	Type
168	WPP
456	4in Concrete
18	WPP

(17) Garage

Year Built:
Car Capacity:
Class: CD
Exterior: Siding
Brick Ven.: 0
Stone Ven.: 0
Common Wall: 1 Wall
Foundation: 42 Inch
Finished ?:
Auto. Doors: 0
Mech. Doors: 0
Area: 702
% Good: 0
Storage Area: 0
No Conc. Floor: 0

Bsmnt Garage:

Carport Area:
Roof:

Cost Est. for Res. Bldg: 1 Single Family PLAIN Cls CD Blt 0
(11) Heating System: Forced Heat & Cool
Ground Area = 1512 SF Floor Area = 1512 SF.
Phy/Ab.Phy/Func/Econ/Comb. % Good=93/100/100/100/93
Building Areas

Stories	Exterior	Foundation	Size	Cost New	Depr. Cost
1 Story	Siding	Basement	1,512		
			Total:	197,275	183,466
Other Additions/Adjustments					
Water/Sewer					
1000 Gal Septic			1	4,582	4,261
Porches					
WPP			168	3,721	3,461
WPP			18	906	843
4in Concrete			456	3,374	3,138
Garages					
Class: CD Exterior: Siding Foundation: 42 Inch (Unfinished)					
Base Cost			702	25,784	23,979
Common Wall: 1 Wall			1	-2,529	-2,352
Class: CD Exterior: Pole (Unfinished)					
Base Cost			1680	36,540	33,982
			Totals:	269,653	250,778

Notes:
ECF (RESIDENTIAL) 1.297 => TCV: 325,259

*** Information herein deemed reliable but not guaranteed***

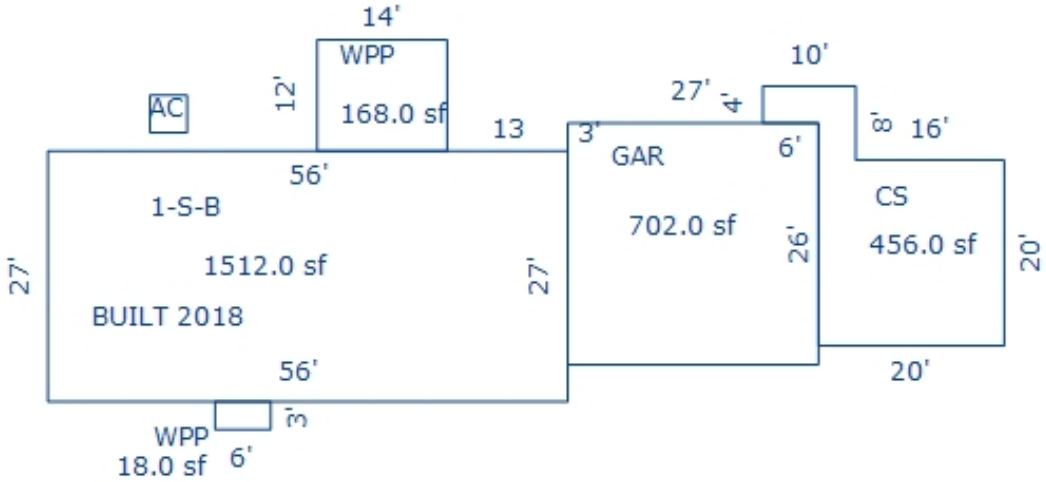

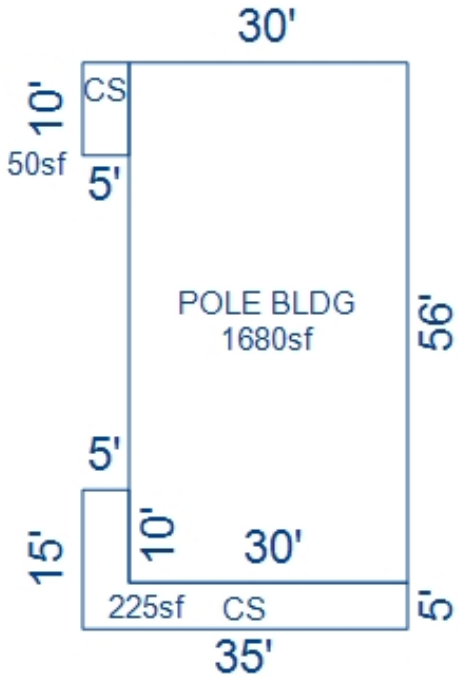

*** Information herein deemed reliable but not guaranteed***

Parcel Number: 2410-24-2302-01 Jurisdiction: GREENWOOD TWP County: WEXFORD Printed on 02/15/2024

Grantor	Grantee	Sale Price	Sale Date	Inst. Type	Terms of Sale	Liber & Page	Verified By	Prcnt. Trans.

Property Address	Class: RESIDENTIAL-IMPROV	Zoning:	Building Permit(s)	Date	Number	Status
8656 N 35 RD	School: MANTON CONSOLIDATED SCHOOLS					
	P.R.E. 100% / /					
Owner's Name/Address	:					
TRUESDALE, THOMAS R & ROBERTA 8656 N 35 RD MANTON MI 49663	2024 Est TCV 203,826 TCV/TFA: 188.73					

X Improved | Vacant

Public Improvements

- Dirt Road
- Gravel Road
- Paved Road
- Storm Sewer
- Sidewalk
- Water
- Sewer
- Electric
- Gas
- Curb
- Street Lights
- Standard Utilities
- Underground Utils.

Topography of Site

- Level
- Rolling
- Low
- High
- Landscaped
- Swamp
- Wooded
- Pond
- Waterfront
- Ravine
- Wetland
- Flood Plain

Who When What

GLA 05/13/2021 INSPECTION

Tax Description

N 1/2 OF S 1/2 OF NW 1/4 EXC COM AT NW COR OF SD SEC; S 1341.34 FT TO POB; E 300 FT; S 280FT; W300 FT; N 280 FT TO PB 37.66 AC M/L GW. SEC. 24 T24N R10W
-MANTON-
SPLIT ON 12/11/2020 INTO 2410-24-2302-01, 2410-24-2302-02;

Comments/Influences

Split/Comb. on 12/11/2020 completed 12/11/2020 LINDA ;
Parent Parcel(s): 2410-24-2302;
Child Parcel(s): 2410-24-2302-01, 2410-24-2302-02;

Land Value Estimates for Land Table 4010.LAND VALUES

Description	Frontage	Depth	* Factors * Front	Depth	Rate	%Adj.	Reason	Value
ACREAGE			37.364 Acres		2,722	100		101,705
ROW			0.296 Acres		0	100		0
			37.66 Total Acres		Total Est. Land Value =			101,705

Land Improvement Cost Estimates

Description	Rate	Size	% Good	Cash Value
D/W/P: 3.5 Concrete	6.63	528	55	1,926
Wood Frame	24.42	240	45	2,637
Wood Frame	35.33	64	45	1,017
Total Estimated Land Improvements True Cash Value =				5,580

Year	Land Value	Building Value	Assessed Value	Board of Review	Tribunal/ Other	Taxable Value
2024	50,900	51,000	101,900			64,325C
2023	45,200	41,600	86,800			61,262C
2022	36,300	34,900	71,200			58,345C
2021	32,200	32,400	64,600			56,482C

The Equalizer. Copyright (c) 1999 - 2009. Licensed To: Township of Greenwood, County of Wexford, Michigan

*** Information herein deemed reliable but not guaranteed***

Building Type

	Single Family
X	Mobile Home
	Town Home
	Duplex
	A-Frame

X	Wood Frame

Building Style: SWT/DWT

Yr Built	Remodeled
1994	0

Condition: Good

Room List

	Basement
	1st Floor
	2nd Floor
	Bedrooms

(1) Exterior

	Wood/Shingle
X	Aluminum/Vinyl
	Brick
X	Insulation

(2) Windows

X	Many Avg. Few	X	Large Avg. Small

	Wood Sash
	Metal Sash
X	Vinyl Sash
	Double Hung
	Horiz. Slide
	Casement
	Double Glass
	Patio Doors
X	Storms & Screens

(3) Roof

X	Gable		Gambrel
	Hip		Mansard
	Flat		Shed

X	Asphalt Shingle

Chimney:

(3) Roof (cont.)

	Eavestrough
X	Insulation
0	Front Overhang
0	Other Overhang

(4) Interior

X	Drywall		Plaster
	Paneled		Wood T&G

Trim & Decoration

	Ex	X	Ord		Min

Size of Closets

	Lg	X	Ord		Small

Doors:		Solid	X	H.C.	

(5) Floors

Kitchen:
Other: Linoleum
Other: Carpeted

(6) Ceilings

X	Drywall		

(7) Excavation

Basement: 1620 S.F.
Crawl: 0 S.F.
Slab: 0 S.F.
Height to Joists: 0.0

(8) Basement

	Conc. Block
	Poured Conc.
	Stone
	Treated Wood
	Concrete Floor

(9) Basement Finish

	Recreation SF
	Living SF
	Walkout Doors (B)
	No Floor SF
	Walkout Doors (A)

(10) Floor Support

Joists:
Unsupported Len:
Cntr.Sup:

(11) Heating/Cooling

X	Gas		Oil		Elec.
	Wood		Coal		Steam

X	Forced Warm Air
	Wall Furnace
	Warm & Cool Air
	Heat Pump
	Central Air
	Wood Furnace

(12) Electric

150	Amps Service

No./Qual. of Fixtures

	Ex.	X	Ord.		Min

No. of Elec. Outlets

	Many	X	Ave.		Few

(13) Plumbing

	Average Fixture(s)
2	3 Fixture Bath
	2 Fixture Bath
	Softener, Auto
	Softener, Manual
	Solar Water Heat
	No Plumbing
	Extra Toilet
	Extra Sink
	Separate Shower
	Ceramic Tile Floor
	Ceramic Tile Wains
	Ceramic Tub Alcove
	Vent Fan

(14) Water/Sewer

	Public Water
	Public Sewer
1	Water Well
1	1000 Gal Septic
	2000 Gal Septic

Lump Sum Items:

(15) Built-ins

	Appliance Allow.
	Cook Top
	Dishwasher
	Garbage Disposal
	Bath Heater
	Vent Fan
	Hot Tub
	Unvented Hood
	Vented Hood
	Intercom
	Jacuzzi Tub
	Jacuzzi repl.Tub
	Oven
	Microwave
	Standard Range
	Self Clean Range
	Sauna
	Trash Compactor
	Central Vacuum
	Security System

(15) Fireplaces

	Interior 1 Story
	Interior 2 Story
	2nd/Same Stack
	Two Sided
	Exterior 1 Story
	Exterior 2 Story
	Prefab 1 Story
	Prefab 2 Story
	Heat Circulator
	Raised Hearth
	Wood Stove
	Direct-Vented Gas

Class: Fair
Effec. Age: 20
Floor Area:
Total Base New : 161,143 E.C.F.
Total Depr Cost: 74,434 X 1.297
Estimated T.C.V: 96,541

(16) Porches/Decks

Area	Type
321	WPP

(17) Garage

Year Built:
Car Capacity:
Class: CD
Exterior: Siding
Brick Ven.: 0
Stone Ven.: 0
Common Wall: Detache
Foundation: 42 Inch
Finished ?:
Auto. Doors: 0
Mech. Doors: 0
Area: 768
% Good: 0
Storage Area: 0
No Conc. Floor: 0

Bsmnt Garage:

Carport Area:
Roof:

Cost Est. for Res. Bldg: 1 Mobile Home SWT/DWT Cls Fair Blt 1994
(11) Heating System: Forced Warm Air
Ground Area = 1080 SF Floor Area = 1080 SF.
Phy/Ab.Phy/Func/Econ/Comb. % Good=46/100/100/100/46
Building Areas

Type	Ext. Walls	Roof/Fnd.	Size	Cost New	Depr. Cost	
Main Home	Siding	Comp.Shingle	1080			
Basement	Block, 6"		1620			
			Total:	104,105	47,888	
Other Additions/Adjustments						
42" frost-free footings, foundation			134	7,479	3,440	
Plumbing						
3 Fixture Bath			1	2,745	1,263	
Water/Sewer						
1000 Gal Septic			1	4,582	2,108	
Water Well, 100 Feet			1	5,680	2,613	
Porches						
WPP			321	6,548	3,012	
Garages						
Class: CD Exterior: Siding Foundation: 42 Inch (Unfinished)						
Base Cost			768	27,441	12,623	
Local Cost Items						
WOOD LEAN TO DIRT			596	2,563	1,487	*5
			Totals:	161,143	74,434	

Notes:
ECF (RESIDENTIAL) 1.297 => TCV: 96,541

*** Information herein deemed reliable but not guaranteed***

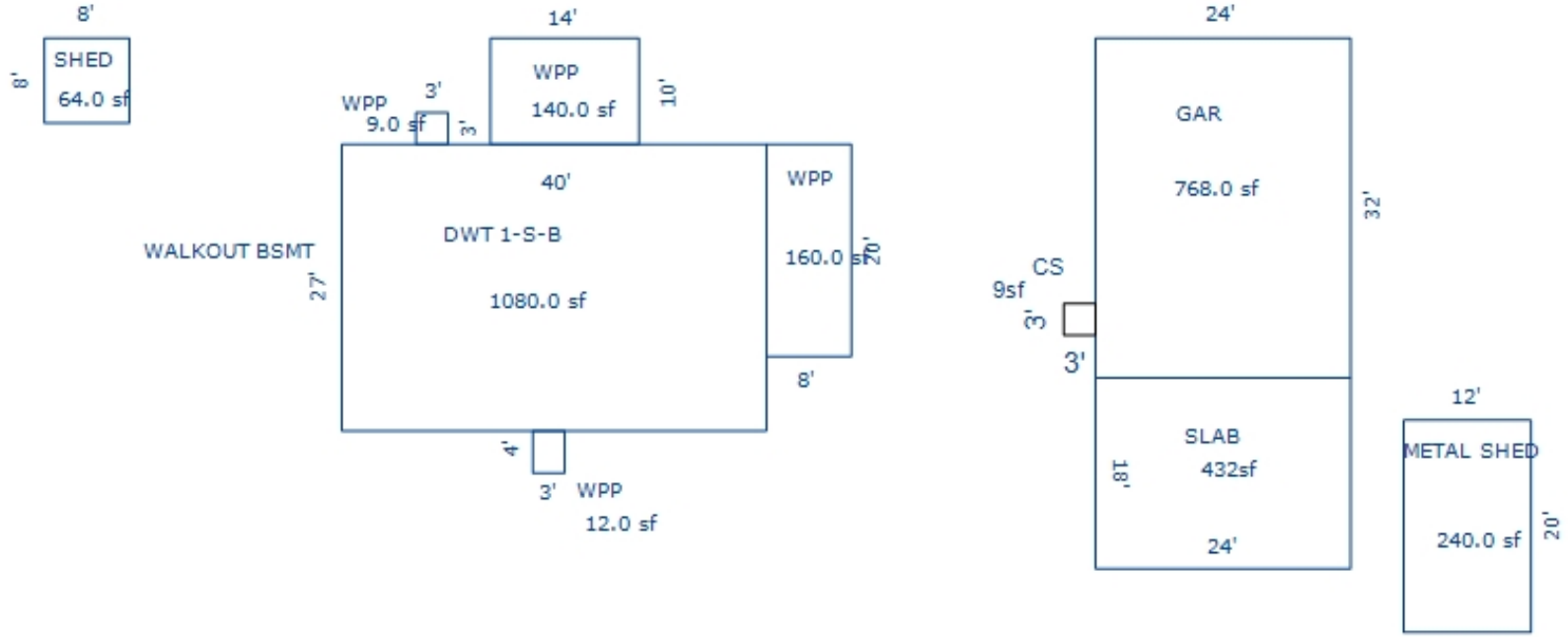

*** Information herein deemed reliable but not guaranteed***

Parcel Number: 2410-24-2302-02 Jurisdiction: GREENWOOD TWP County: WEXFORD Printed on 02/15/2024

Grantor	Grantee	Sale Price	Sale Date	Inst. Type	Terms of Sale	Liber & Page	Verified By	Prcnt. Trans.

Property Address	Class: RESIDENTIAL-IMPROV	Zoning:	Building Permit(s)	Date	Number	Status
8720 N 35 RD	School: MANTON CONSOLIDATED SCHOOLS		Manufactured home	09/29/2020	PB20-0181	RECHECK
	P.R.E. 100% / /					
Owner's Name/Address	:					
TRUESDALE, THOMAS R & ROBERTA 8720 N 35 RD MANTON MI 49663	2024 Est TCV 130,511 TCV/TFA: 100.70					

X Improved | Vacant

Land Value Estimates for Land Table 4010.LAND VALUES

Description	Frontage	Depth	* Factors * Front	Depth	Rate	%Adj.	Reason	Value
ACREAGE			1.710 Acres		8,297	100		14,188
			0.210 Acres		0	100		0
			1.92 Total Acres		Total Est. Land Value =			14,188

Land Improvement Cost Estimates

Description	Rate	Size	% Good	Cash Value
Wood Frame	32.53	80	50	1,301
Total Estimated Land Improvements True Cash Value =				1,301

Public Improvements

X Dirt Road
Gravel Road
Paved Road
Storm Sewer
Sidewalk
Water
Sewer
Electric
Gas
Curb
Street Lights
Standard Utilities
Underground Utils.

Topography of Site

X Level
Rolling
Low
High
Landscaped
Swamp
Wooded
Pond
Waterfront
Ravine
Wetland
Flood Plain

Tax Description

COM AT NW COR OF SD SEC; S 1341.34 FT TO POB; E 300 FT; S 280 FT; W 300 FT; N 280 FT TO POB 1.92 AC M/L GW. SEC. 24 T24N R10W -MANTON-
SPLIT/COMBINED ON 12/11/2020 FROM 2410-24-2302;

Comments/Influences

Split/Comb. on 12/11/2020 completed 12/11/2020 LINDA ;
Parent Parcel(s): 2410-24-2302;
Child Parcel(s): 2410-24-2302-01, 2410-24-2302-02;

Who	When	What
JB	10/23/2023	INSPECTION
GLA	05/13/2021	INSPECTION

Year	Land Value	Building Value	Assessed Value	Board of Review	Tribunal/ Other	Taxable Value
2024	7,100	58,200	65,300			40,984C
2023	4,900	42,100	47,000			39,033C
2022	4,100	36,200	40,300			37,175C
2021	4,700	0	4,700			1,816C

The Equalizer. Copyright (c) 1999 - 2009. Licensed To: Township of Greenwood, County of Wexford, Michigan

*** Information herein deemed reliable but not guaranteed***

Building Type

	Single Family
X	Mobile Home
	Town Home
	Duplex
	A-Frame
X	Wood Frame

Building Style: SWT/DWT

Yr Built	Remodeled
0	0

Condition: Good

Room List

	Basement
	1st Floor
	2nd Floor
	Bedrooms

(1) Exterior

	Wood/Shingle
X	Aluminum/Vinyl
	Brick
X	Insulation

(2) Windows

	Many		Large
X	Avg.	X	Avg.
	Few		Small

	Wood Sash
	Metal Sash
X	Vinyl Sash
	Double Hung
	Horiz. Slide
	Casement
	Double Glass
	Patio Doors
X	Storms & Screens

(3) Roof

X	Gable		Gambrel
	Hip		Mansard
	Flat		Shed

X	Asphalt Shingle

Chimney:

(3) Roof (cont.)

	Eavestrough
X	Insulation
0	Front Overhang
0	Other Overhang

(4) Interior

X	Drywall		Plaster
	Paneled		Wood T&G

Trim & Decoration

	Ex	X	Ord		Min

Size of Closets

	Lg	X	Ord		Small

Doors:		Solid	X	H.C.	

(5) Floors

Kitchen:
Other: Linoleum
Other: Carpeted

(6) Ceilings

X	Drywall		

(7) Excavation

Basement: 0 S.F.
Crawl: 0 S.F.
Slab: 0 S.F.
Height to Joists: 0.0

(8) Basement

	Conc. Block
	Poured Conc.
	Stone
	Treated Wood
	Concrete Floor

(9) Basement Finish

	Recreation SF
	Living SF
	Walkout Doors (B)
	No Floor SF
	Walkout Doors (A)

(10) Floor Support

Joists:
Unsupported Len:
Cntr.Sup:

(11) Heating/Cooling

X	Gas		Oil		Elec.
	Wood		Coal		Steam

X	Forced Warm Air
	Wall Furnace
	Warm & Cool Air
	Heat Pump

	Central Air
	Wood Furnace

(12) Electric

150	Amps Service

No./Qual. of Fixtures

	Ex.	X	Ord.		Min

No. of Elec. Outlets

	Many	X	Ave.		Few

(13) Plumbing

1	Average Fixture(s)
	3 Fixture Bath
	2 Fixture Bath
	Softener, Auto
	Softener, Manual
	Solar Water Heat
	No Plumbing
	Extra Toilet
	Extra Sink
	Separate Shower
	Ceramic Tile Floor
	Ceramic Tile Wains
	Ceramic Tub Alcove
	Vent Fan

(14) Water/Sewer

	Public Water
	Public Sewer
1	Water Well
1	1000 Gal Septic
	2000 Gal Septic

Lump Sum Items:

(15) Built-ins

	Appliance Allow.
	Cook Top
	Dishwasher
	Garbage Disposal
	Bath Heater
	Vent Fan
	Hot Tub
	Unvented Hood
	Vented Hood
	Intercom
	Jacuzzi Tub
	Jacuzzi repl.Tub
	Oven
	Microwave
	Standard Range
	Self Clean Range
	Sauna
	Trash Compactor
	Central Vacuum
	Security System

(15) Fireplaces

	Interior 1 Story
	Interior 2 Story
	2nd/Same Stack
	Two Sided
	Exterior 1 Story
	Exterior 2 Story
	Prefab 1 Story
	Prefab 2 Story
	Heat Circulator
	Raised Hearth
	Wood Stove
	Direct-Vented Gas

Class: Average
Effec. Age: 5
Floor Area:
Total Base New : 101,934 E.C.F.
Total Depr Cost: 88,683 X 1.297
Estimated T.C.V: 115,022

(16) Porches/Decks

Area	Type
32	WPP

(17) Garage

Year Built:
Car Capacity:
Class:
Exterior:
Brick Ven.:
Stone Ven.:
Common Wall:
Foundation:
Finished ?:
Auto. Doors:
Mech. Doors:
Area:
% Good:
Storage Area:
No Conc. Floor:

Bsmnt Garage:

Carport Area:
Roof:

Cost Est. for Res. Bldg: 1 Mobile Home SWT/DWT Cls Average Blt 0
(11) Heating System: Wall Furnace
Ground Area = 1296 SF Floor Area = 1296 SF.
Phy/Ab.Phy/Func/Econ/Comb. % Good=87/100/100/100/87
Building Areas

Type	Ext. Walls	Roof/Fnd.	Size	Cost New	Depr. Cost
Main Home	Siding	Metal	1296		
			Total:	85,012	73,961
Other Additions/Adjustments					
Skirting, Metal or Vinyl, Vertical			150	1,716	1,493
Water/Sewer					
1000 Gal Septic			1	4,899	4,262
Water Well, 150 Feet			1	8,655	7,530
Porches					
WPP			32	1,652	1,437
			Totals:	101,934	88,683

Notes:

ECF (RESIDENTIAL) 1.297 => TCV: 115,022

*** Information herein deemed reliable but not guaranteed***

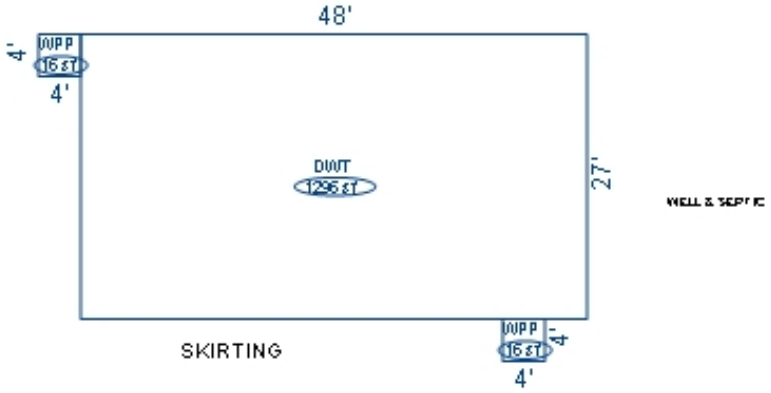

*** Information herein deemed reliable but not guaranteed***

Parcel Number: 2410-24-3101 Jurisdiction: GREENWOOD TWP County: WEXFORD Printed on 02/15/2024

Grantor	Grantee	Sale Price	Sale Date	Inst. Type	Terms of Sale	Liber & Page	Verified By	Prcnt. Trans.
FINEGAN, ROYCE	FLACK, DIANE	0	01/29/2015	WD	16-LC PAYOFF	673/2554	DEED	0.0
FINEGAN, DANIEL & ROYCE	FLACK, WILLIAM & DIANE	50,000	04/29/2004	LC	03-ARM'S LENGTH	547:114	DEED	0.0
DUTCHMAN MANAGEMENT	FINEGAN, DANIEL	35,100	07/31/2000	WD	08-ESTATE	375:354	DEED	0.0

Property Address

5421 E 10 RD

Owner's Name/Address

FLACK, DIANE
5421 E 10 RD
MANTON MI 49663

Tax Description

COM AT S 1/4 COR OF SEC; W 264.15 FT TO POB: N 1319.65 FT; W 362.33 FT; S TO SECTION LINE; E TO POB. --12 A M/L-- GW. SEC. 24 T24N R10W -MANTON-

Comments/Influences

The Equalizer. Copyright (c) 1999 - 2009. Licensed To: Township of Greenwood, County of Wexford, Michigan

Class: RESIDENTIAL-IMPROV Zoning:

School: MANTON CONSOLIDATED SCHOOLS

P.R.E. 100% / /

:

2024 Est TCV 159,076 TCV/TFA: 82.64

Building Permit(s)	Date	Number	Status
Res. Add/Alter/Repair	05/09/2011	PB11-0091	
RESIDENTIAL - NEW	08/04/1997	PE10647	

X	Improved		Vacant

	Public Improvements
	Dirt Road
	Gravel Road
X	Paved Road
	Storm Sewer
	Sidewalk
	Water
	Sewer
X	Electric
	Gas
	Curb
	Street Lights
	Standard Utilities
	Underground Utils.

	Topography of Site
X	Level
X	Rolling
	Low
	High
	Landscaped
	Swamp
X	Wooded
	Pond
	Waterfront
	Ravine
	Wetland
	Flood Plain
X	PINES/OPEN

Who	When	What
GLA	05/30/2017	INSPECTION

Land Value Estimates for Land Table 4010.LAND VALUES

Description	Frontage	Depth	* Factors * Front	Depth	Rate	%Adj.	Reason	Value
ACREAGE			11.730 Acres		4,000	100		46,921
ROW			0.270 Acres		0	100		0
			12.00 Total Acres		Total Est. Land Value =			46,921

Land Improvement Cost Estimates

Description	Rate	Size	% Good	Cash Value
Wood Frame	22.08	128	45	1,272
Wood Frame	28.00	64	45	806
Total Estimated Land Improvements True Cash Value =				2,078

Year	Land Value	Building Value	Assessed Value	Board of Review	Tribunal/ Other	Taxable Value
2024	23,500	56,000	79,500			37,914C
2023	15,200	45,300	60,500	0M		0
2022	13,800	37,800	51,600	0M		0
2021	14,100	36,300	50,400	0M		0

*** Information herein deemed reliable but not guaranteed***

Building Type

	Single Family
X	Mobile Home
	Town Home
	Duplex
	A-Frame

X	Wood Frame

Building Style: SWT/DWT

Yr Built	Remodeled
0	0

Condition: Good

Room List

	Basement
	1st Floor
	2nd Floor
	Bedrooms

(1) Exterior

	Wood/Shingle
	Aluminum/Vinyl
X	Brick
X	Insulation

(2) Windows

	Many		Large
X	Avg.	X	Avg.
	Few		Small

	Wood Sash
	Metal Sash
X	Vinyl Sash
	Double Hung
	Horiz. Slide
	Casement
	Double Glass
	Patio Doors
X	Storms & Screens

(3) Roof

X	Gable		Gambrel
	Hip		Mansard
	Flat		Shed

X	Asphalt Shingle

Chimney:

(3) Roof (cont.)

	Eavestrough
X	Insulation
0	Front Overhang
0	Other Overhang

(4) Interior

X	Drywall		Plaster
	Paneled		Wood T&G

Trim & Decoration

	Ex	X	Ord		Min

Size of Closets

	Lg	X	Ord		Small

Doors:		Solid	X	H.C.	

(5) Floors

Kitchen:
Other: Linoleum
Other: Carpeted

(6) Ceilings

X	Drywall		

(7) Excavation

Basement: 0 S.F.
Crawl: 0 S.F.
Slab: 0 S.F.
Height to Joists: 0.0

(8) Basement

	Conc. Block
	Poured Conc.
	Stone
	Treated Wood
	Concrete Floor

(9) Basement Finish

	Recreation SF
	Living SF
	Walkout Doors (B)
	No Floor SF
	Walkout Doors (A)

(10) Floor Support

Joists:
Unsupported Len:
Cntr.Sup:

(11) Heating/Cooling

X	Gas		Oil		Elec.
	Wood		Coal		Steam

X	Forced Warm Air
	Wall Furnace
	Warm & Cool Air
	Heat Pump

	Central Air
	Wood Furnace

(12) Electric

150	Amps Service

No./Qual. of Fixtures

	Ex.	X	Ord.		Min

No. of Elec. Outlets

	Many	X	Ave.		Few

(13) Plumbing

1	Average Fixture(s)
	3 Fixture Bath
	2 Fixture Bath
	Softener, Auto
	Softener, Manual
	Solar Water Heat
	No Plumbing
	Extra Toilet
	Extra Sink
	Separate Shower
	Ceramic Tile Floor
	Ceramic Tile Wains
	Ceramic Tub Alcove
	Vent Fan

(14) Water/Sewer

	Public Water
	Public Sewer
1	Water Well
1	1000 Gal Septic
	2000 Gal Septic

Lump Sum Items:

(15) Built-ins

	Appliance Allow.
	Cook Top
	Dishwasher
	Garbage Disposal
	Bath Heater
	Vent Fan
	Hot Tub
	Unvented Hood
	Vented Hood
	Intercom
	Jacuzzi Tub
	Jacuzzi repl.Tub
	Oven
	Microwave
	Standard Range
	Self Clean Range
	Sauna
	Trash Compactor
	Central Vacuum
	Security System

(15) Fireplaces

	Interior 1 Story
	Interior 2 Story
	2nd/Same Stack
	Two Sided
	Exterior 1 Story
	Exterior 2 Story
	Prefab 1 Story
	Prefab 2 Story
	Heat Circulator
	Raised Hearth
	Wood Stove
	Direct-Vented Gas

Class: Fair
Effec. Age: 25
Floor Area:
Total Base New : 63,040 E.C.F.
Total Depr Cost: 22,066 X 1.297
Estimated T.C.V: 28,620

(16) Porches/Decks

Area	Type
320	WPP

(17) Garage

Year Built:
Car Capacity:
Class: D
Exterior: Pole
Brick Ven.: 0
Stone Ven.: 0
Common Wall: Detache
Foundation: 18 Inch
Finished ?:
Auto. Doors: 0
Mech. Doors: 0
Area: 320
% Good: 0
Storage Area: 0
No Conc. Floor: 0

Bsmnt Garage:

Carport Area:
Roof:

Cost Est. for Res. Bldg: 1 Mobile Home SWT/DWT Cls Fair Blt 0
(11) Heating System: Wall Furnace
Ground Area = 720 SF Floor Area = 720 SF.
Phy/Ab.Phy/Func/Econ/Comb. % Good=35/100/100/100/35
Building Areas

Type	Ext. Walls	Roof/Fnd.	Size	Cost New	Depr. Cost
Main Home	Ribbed	Metal	720		
			Total:	36,424	12,749
Other Additions/Adjustments					
Skirting, Metal or Vinyl, Vertical			98	1,093	383
Water/Sewer					
1000 Gal Septic			1	4,582	1,604
Water Well, 100 Feet			1	5,680	1,988
Porches					
WPP			320	6,528	2,285
Garages					
Class: D Exterior: Pole (Unfinished)					
Base Cost			320	8,733	3,057
			Totals:	63,040	22,066

Notes:
ECF (RESIDENTIAL) 1.297 => TCV: 28,620

*** Information herein deemed reliable but not guaranteed***

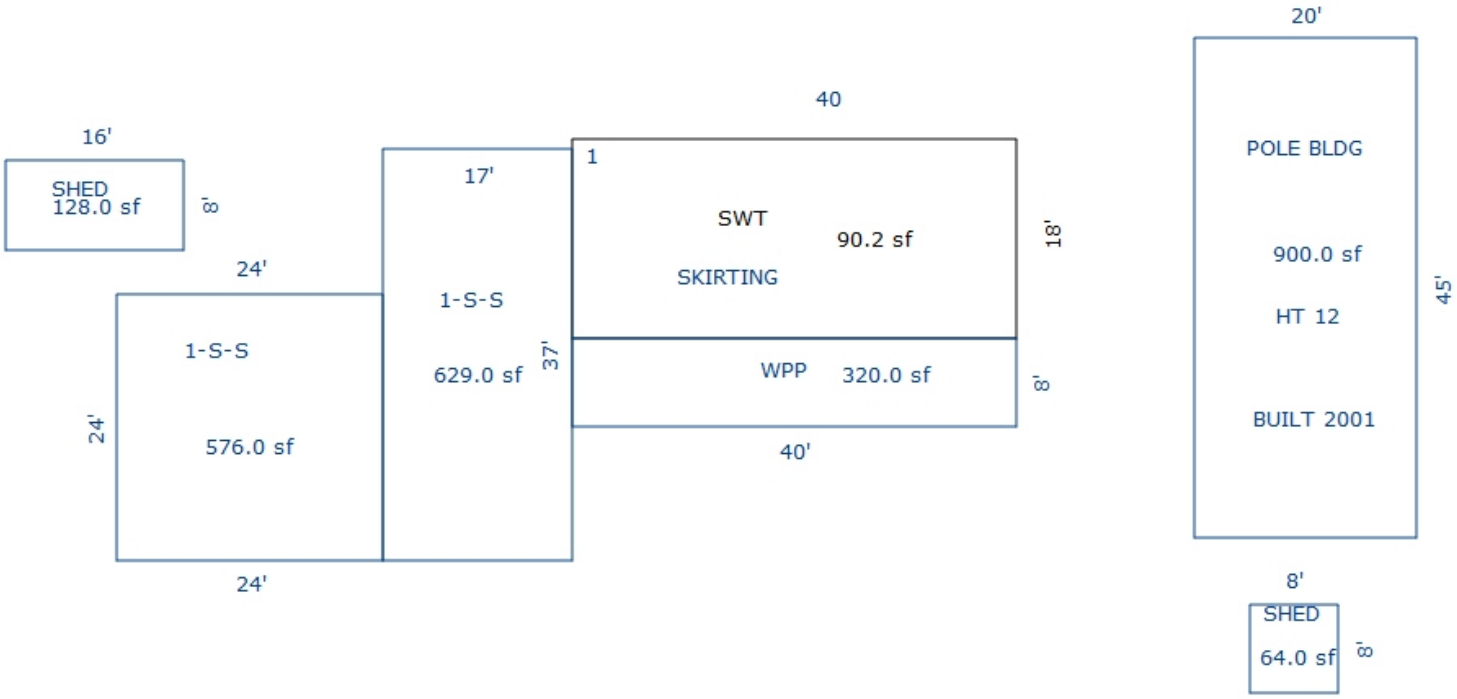

Sketch by Apex Sketch

*** Information herein deemed reliable but not guaranteed***

Building Type

X	Single Family
	Mobile Home
	Town Home
	Duplex
	A-Frame
X	Wood Frame

Building Style: PLAIN

Yr Built	Remodeled
0	0

Condition: Good

Room List

	Basement
	1st Floor
	2nd Floor
	Bedrooms

(1) Exterior

X	Wood/Shingle
	Aluminum/Vinyl
	Brick
X	Insulation

(2) Windows

X	Many		Large
	Avg.	X	Avg.
	Few		Small

	Wood Sash
	Metal Sash
X	Vinyl Sash
	Double Hung
	Horiz. Slide
	Casement
	Double Glass
	Patio Doors
X	Storms & Screens

(3) Roof

X	Gable		Gambrel
	Hip		Mansard
	Flat		Shed

X	Asphalt Shingle

Chimney:

(3) Roof (cont.)

	Eavestrough
X	Insulation
0	Front Overhang
0	Other Overhang

(4) Interior

X	Drywall		Plaster
	Paneled		Wood T&G

Trim & Decoration

	Ex	X	Ord		Min

Size of Closets

	Lg	X	Ord		Small

Doors:		Solid	X	H.C.	

(5) Floors

Kitchen:
Other: Linoleum
Other: Carpeted

(6) Ceilings

X	Drywall

(7) Excavation

Basement: 0 S.F.
Crawl: 1205 S.F.
Slab: 0 S.F.
Height to Joists: 0.0

(8) Basement

	Conc. Block
	Poured Conc.
	Stone
	Treated Wood
	Concrete Floor

(9) Basement Finish

	Recreation SF
	Living SF
	Walkout Doors (B)
	No Floor SF
	Walkout Doors (A)

(10) Floor Support

Joists:
Unsupported Len:
Cntr.Sup:

(11) Heating/Cooling

X	Gas		Oil		Elec.
	Wood		Coal		Steam

	Forced Air w/o Ducts
X	Forced Air w/ Ducts
	Forced Hot Water
	Electric Baseboard
	Elec. Ceil. Radiant
	Radiant (in-floor)
	Electric Wall Heat
	Space Heater
	Wall/Floor Furnace
	Forced Heat & Cool
	Heat Pump
	No Heating/Cooling

	Central Air
	Wood Furnace

(12) Electric

150	Amps Service

No./Qual. of Fixtures

	Ex.	X	Ord.		Min

No. of Elec. Outlets

	Many	X	Ave.		Few

(13) Plumbing

1	Average Fixture(s)
	3 Fixture Bath
	2 Fixture Bath
	Softener, Auto
	Softener, Manual
	Solar Water Heat
	No Plumbing
	Extra Toilet
	Extra Sink
	Separate Shower
	Ceramic Tile Floor
	Ceramic Tile Wains
	Ceramic Tub Alcove
	Vent Fan

(14) Water/Sewer

	Public Water
	Public Sewer
	Water Well
	1000 Gal Septic
	2000 Gal Septic

Lump Sum Items:

(15) Built-ins

	Appliance Allow.
	Cook Top
	Dishwasher
	Garbage Disposal
	Bath Heater
	Vent Fan
	Hot Tub
	Unvented Hood
	Vented Hood
	Intercom
	Jacuzzi Tub
	Jacuzzi repl.Tub
	Oven
	Microwave
	Standard Range
	Self Clean Range
	Sauna
	Trash Compactor
	Central Vacuum
	Security System

(15) Fireplaces

	Interior 1 Story
	Interior 2 Story
	2nd/Same Stack
	Two Sided
	Exterior 1 Story
	Exterior 2 Story
	Prefab 1 Story
	Prefab 2 Story
	Heat Circulator
	Raised Hearth
	Wood Stove
	Direct-Vented Gas

Class: CD
Effec. Age: 61
Floor Area: 1,205
Total Base New : 139,563 E.C.F.
Total Depr Cost: 62,804 X 1.297
Estimated T.C.V: 81,457

(16) Porches/Decks

Area	Type

(17) Garage

Year Built:
Car Capacity:
Class:
Exterior:
Brick Ven.:
Stone Ven.:
Common Wall:
Foundation:
Finished ?:
Auto. Doors:
Mech. Doors:
Area:
% Good:
Storage Area:
No Conc. Floor:

Bsmnt Garage:

Carport Area:
Roof:

Cost Est. for Res. Bldg: 2 Single Family PLAIN Cls CD Blt 0
(11) Heating System: Forced Air w/ Ducts
Ground Area = 1205 SF Floor Area = 1205 SF.
Phy/Ab.Phy/Func/Econ/Comb. % Good=45/100/100/100/45
Building Areas

Stories	Exterior	Foundation	Size	Cost New	Depr. Cost
1 Story	Siding	Crawl Space	1,205		
			Total:	139,563	62,804

Other Additions/Adjustments

Totals:	139,563	62,804

Notes:

ECF (RESIDENTIAL) 1.297 => TCV: 81,457

*** Information herein deemed reliable but not guaranteed***

Parcel Number: 2410-24-3102 Jurisdiction: GREENWOOD TWP County: WEXFORD Printed on 02/15/2024

Grantor	Grantee	Sale Price	Sale Date	Inst. Type	Terms of Sale	Liber & Page	Verified By	Prcnt. Trans.
DUTCHMAN MANAGEMENT LTD.	TAYLOR, ROGER & PAM	24,000	05/15/1996	WD	03-ARM'S LENGTH	349:285	DEED	0.0

Property Address

5349 E 10 RD

Owner's Name/Address

TAYLOR, ROGER DALE
& PAM JEAN
5349 E 10 RD
MANTON MI 49663

Tax Description

W 660 FT OF E 1/2 OF SW 1/4 40 A. GW.
SEC. 24 T24N R10W - MANTON -

Comments/Influences

The Equalizer. Copyright (c) 1999 - 2009.
Licensed To: Township of Greenwood, County of Wexford, Michigan

Class: RESIDENTIAL-IMPROV Zoning:

School: MANTON CONSOLIDATED SCHOOLS

P.R.E. 100% / /

:

2024 Est TCV 188,082 TCV/TFA: 139.11

Building Permit(s)	Date	Number	Status
RESIDENTIAL - REMODEL	08/27/2004	PM7854	
RESIDENTIAL - REMODEL	06/20/2002	PM5961	

X Improved | Vacant

	Public Improvements
	Dirt Road
X	Gravel Road
	Paved Road
	Storm Sewer
	Sidewalk
	Water
	Sewer
X	Electric
	Gas
	Curb
	Street Lights
	Standard Utilities
	Underground Utils.

	Topography of Site
X	Level
X	Rolling
	Low
	High
	Landscaped
	Swamp
X	Wooded
	Pond
	Waterfront
	Ravine
	Wetland
	Flood Plain
X	PINES/OPEN

Who	When	What
GLA	05/30/2017	INSPECTION

Land Value Estimates for Land Table 4010.LAND VALUES

Description	Frontage	Depth	* Factors * Front	Depth	Rate	%Adj.	Reason	Value
ACREAGE			39.500 Acres		2,722	100		107,519
ROW			0.500 Acres		0	100		0
			40.00 Total Acres		Total Est. Land Value =			107,519

Year	Land Value	Building Value	Assessed Value	Board of Review	Tribunal/ Other	Taxable Value
2024	53,800	40,200	94,000			63,543C
2023	47,500	32,400	79,900			60,518C
2022	37,700	27,000	64,700			57,637C
2021	33,700	24,000	57,700			55,796C

*** Information herein deemed reliable but not guaranteed***

Building Type

	Single Family
X	Mobile Home
	Town Home
	Duplex
	A-Frame

X	Wood Frame

Building Style: SWT/DWT

Yr Built	Remodeled
0	0

Condition: Good

Room List

	Basement
	1st Floor
	2nd Floor
	Bedrooms

(1) Exterior

	Wood/Shingle
X	Aluminum/Vinyl
	Brick
X	Insulation

(2) Windows

X	Many Avg. Few	X	Large Avg. Small

	Wood Sash
	Metal Sash
X	Vinyl Sash
	Double Hung
	Horiz. Slide
	Casement
	Double Glass
	Patio Doors
X	Storms & Screens

(3) Roof

X	Gable		Gambrel
	Hip		Mansard
	Flat		Shed

X	Asphalt Shingle

Chimney:

(3) Roof (cont.)

	Eavestrough
X	Insulation
0	Front Overhang
0	Other Overhang

(4) Interior

X	Drywall		Plaster
	Paneled		Wood T&G

Trim & Decoration

	Ex	X	Ord		Min

Size of Closets

	Lg	X	Ord		Small

Doors:		Solid	X	H.C.	

(5) Floors

Kitchen:
Other: Linoleum
Other: Carpeted

(6) Ceilings

X	Drywall

(7) Excavation

Basement: 1352 S.F.
Crawl: 0 S.F.
Slab: 0 S.F.
Height to Joists: 0.0

(8) Basement

	Conc. Block
	Poured Conc.
	Stone
	Treated Wood
	Concrete Floor

(9) Basement Finish

	Recreation	SF
	Living	SF
1	Walkout Doors (B)	
	No Floor	SF
	Walkout Doors (A)	

(10) Floor Support

Joists:
Unsupported Len:
Cntr.Sup:

(11) Heating/Cooling

X	Gas		Oil		Elec.
	Wood		Coal		Steam

X	Forced Warm Air
	Wall Furnace
	Warm & Cool Air
	Heat Pump

	Central Air
	Wood Furnace

(12) Electric

150	Amps Service

No./Qual. of Fixtures

	Ex.	X	Ord.		Min

No. of Elec. Outlets

	Many	X	Ave.		Few

(13) Plumbing

2	Average Fixture(s)
	3 Fixture Bath
	2 Fixture Bath
	Softener, Auto
	Softener, Manual
	Solar Water Heat
	No Plumbing
	Extra Toilet
	Extra Sink
	Separate Shower
	Ceramic Tile Floor
	Ceramic Tile Wains
	Ceramic Tub Alcove
	Vent Fan

(14) Water/Sewer

	Public Water
	Public Sewer
1	Water Well
1	1000 Gal Septic
	2000 Gal Septic

Lump Sum Items:

(15) Built-ins

	Appliance Allow.
	Cook Top
	Dishwasher
	Garbage Disposal
	Bath Heater
	Vent Fan
	Hot Tub
	Unvented Hood
	Vented Hood
	Intercom
	Jacuzzi Tub
	Jacuzzi repl.Tub
	Oven
	Microwave
	Standard Range
	Self Clean Range
	Sauna
	Trash Compactor
	Central Vacuum
	Security System

(15) Fireplaces

	Interior 1 Story
	Interior 2 Story
	2nd/Same Stack
	Two Sided
	Exterior 1 Story
	Exterior 2 Story
	Prefab 1 Story
	Prefab 2 Story
	Heat Circulator
	Raised Hearth
	Wood Stove
	Direct-Vented Gas

Class: Fair
Effec. Age: 20
Floor Area:
Total Base New : 135,032 E.C.F.
Total Depr Cost: 62,115 X 1.297
Estimated T.C.V: 80,563

(16) Porches/Decks

Area	Type
156	WPP

(17) Garage

Year Built:
Car Capacity:
Class: CD
Exterior: Pole
Brick Ven.: 0
Stone Ven.: 0
Common Wall: Detache
Foundation: 18 Inch
Finished ?:
Auto. Doors: 0
Mech. Doors: 0
Area: 280
% Good: 0
Storage Area: 0
No Conc. Floor: 280

Bsmnt Garage:

Carport Area:
Roof:

Cost Est. for Res. Bldg: 1 Mobile Home SWT/DWT Cls Fair Blt 0
(11) Heating System: Wall Furnace
Ground Area = 1352 SF Floor Area = 1352 SF.
Phy/Ab.Phy/Func/Econ/Comb. % Good=46/100/100/100/46
Building Areas

Type	Ext. Walls	Roof/Fnd.	Size	Cost New	Depr. Cost
Main Home	Siding	Comp.Shingle	1352		
Basement	Concrete, 6"		1352		
			Total:	108,673	49,989
Other Additions/Adjustments					
Basement, Outside Entrance, Below Grade			1	2,176	1,001
Plumbing					
3 Fixture Bath			1	2,745	1,263
Water/Sewer					
1000 Gal Septic			1	4,582	2,108
Water Well, 100 Feet			1	5,680	2,613
Porches					
WPP			156	3,588	1,650
Garages					
Class: CD Exterior: Pole (Unfinished)					
Base Cost			280	9,310	4,283
No Concrete Floor			280	-1,722	-792
			Totals:	135,032	62,115

Notes:
ECF (RESIDENTIAL) 1.297 => TCV: 80,563

*** Information herein deemed reliable but not guaranteed***

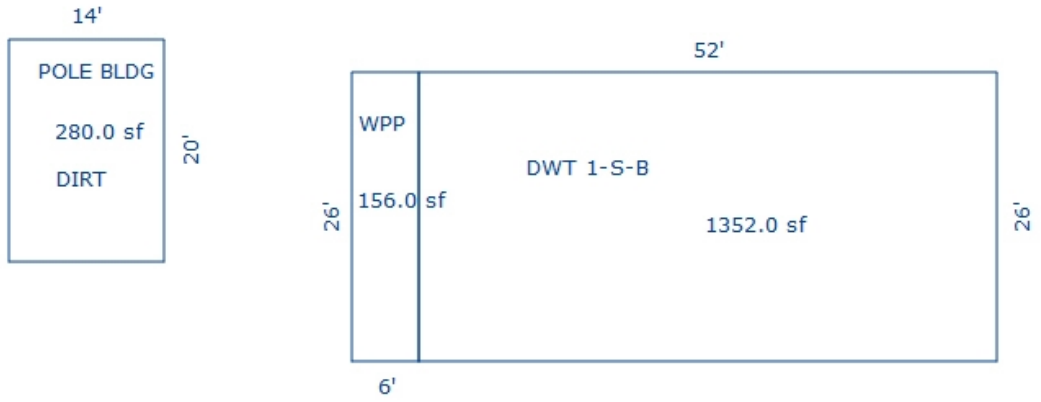

Sketch by Apex Sketch

*** Information herein deemed reliable but not guaranteed***

Parcel Number: 2410-24-3103-01 Jurisdiction: GREENWOOD TWP County: WEXFORD Printed on 02/15/2024

Grantor	Grantee	Sale Price	Sale Date	Inst. Type	Terms of Sale	Liber & Page	Verified By	Prcnt. Trans.
CLIFFORD, MARK ALAN	LITTLE, KELLIE L	100	04/20/2022	QC	20-MULTI PARCEL SALE REF	692/2597	DEED	100.0
DELFAM LLC	CLIFFORD, MARK ALAN	90,000	04/19/2022	WD	20-MULTI PARCEL SALE REF	692/2596	DEED	100.0
KUKUK, ROBERT L & JOLENE M	DELFAM LLC	0	04/18/2022	WD	16-LC PAYOFF	692/2595	DEED	0.0
KUKUK, ROBERT L & JOLENE M	DELFAM LLC	15,000	10/26/2021	LC	03-ARM'S LENGTH	691/1202	DEED	100.0

Property Address

8333 BUTTERMILK LN

Owner's Name/Address

LITTLE, KELLIE L
8333 BUTTERMILK LN
MANTON MI 49663

Class: RESIDENTIAL-VACANT Zoning:

School: MANTON CONSOLIDATED SCHOOLS

P.R.E. 100% 02/07/2023

:

2024 Est TCV 148,952 TCV/TFA: 126.44

Building Permit(s)	Date	Number	Status
Manufactured home	07/18/2022	PB22-0188	ENTERED
OTHER	03/22/2021	PB21-0032	COMPLETE
Pole Barn	05/14/2019	PB19-0059	COMPLETE
Res. New Construction	05/14/2019	PB19-0069	RECHECK

X Improved | Vacant

Public Improvements

- Dirt Road
- Gravel Road
- Paved Road
- Storm Sewer
- Sidewalk
- Water
- Sewer
- Electric
- Gas
- Curb
- Street Lights
- Standard Utilities
- Underground Utils.

Topography of Site

- Level
- Rolling
- Low
- High
- Landscaped
- Swamp
- Wooded
- Pond
- Waterfront
- Ravine
- Wetland
- Flood Plain

Who When What

DB 10/23/2023 INSPECTION
GLA 05/13/2021 INSPECTION

Land Value Estimates for Land Table 4010.LAND VALUES

Description	Frontage	Depth	* Factors * Front	Depth	Rate	%Adj.	Reason	Value
ACREAGE			3.840 Acres		5,095	100		19,563
			3.84 Total Acres			Total Est. Land Value =		19,563

Tax Description

PAR A-5; COM AT S 1/4 COR OF SEC; N 1320.42 FT; W 172.59 FT; TO POB: W 453.92 FT; N 200.14 FT; E 418.87 FT; S7D44M19S E 52.45 FT; S07D45M52S E 149.47 FT TO POB.& PAR A-6; COM AT S 1/4 COR OF SEC; N 1320.42 FT; W 172.59 FT; N07D45M52S W 149.47 FT; N07D44M19S W 52.45 FT TO POB: W 418.87 FT; N 200.13 FT; E 383.88 FT; S07D44M19S E 201.91 FT TO POB. -3.84 AC M/L TOG W & SUB TO EASMT GW SEC 24 T24N R10W -MANTON- [[ASSESSED W/ 24-3101 '02 SPLIT ON 01/28/2020 WITH 2410-24-3103 INTO 2410-24-3103-01;

Year	Land Value	Building Value	Assessed Value	Board of Review	Tribunal/ Other	Taxable Value
2024	9,800	64,700	74,500			65,205C
2023	9,000	53,100	62,100			62,100S
2022	6,900	0	6,900			6,900S
2021	8,100	76,400	84,500			79,671C

The Equalizer. Copyright (c) 1999 - 2009. Licensed To: Township of Greenwood, County of Wexford, Michigan

*** Information herein deemed reliable but not guaranteed***

Building Type

	Single Family
X	Mobile Home
	Town Home
	Duplex
	A-Frame

X	Wood Frame

Building Style: PLAIN

Yr Built	Remodeled
0	0

Condition: Good

Room List

	Basement
	1st Floor
	2nd Floor
	Bedrooms

(1) Exterior

	Wood/Shingle
X	Aluminum/Vinyl
	Brick
X	Insulation

(2) Windows

	Many		Large
X	Avg.	X	Avg.
	Few		Small

	Wood Sash
	Metal Sash
X	Vinyl Sash
	Double Hung
	Horiz. Slide
	Casement
	Double Glass
	Patio Doors
X	Storms & Screens

(3) Roof

X	Gable		Gambrel
	Hip		Mansard
	Flat		Shed

X	Asphalt Shingle

Chimney:

(3) Roof (cont.)

	Eavestrough
X	Insulation
0	Front Overhang
0	Other Overhang

(4) Interior

X	Drywall		Plaster
	Paneled		Wood T&G

Trim & Decoration

	Ex	X	Ord		Min

Size of Closets

	Lg	X	Ord		Small

Doors:		Solid	X	H.C.	

(5) Floors

Kitchen:
Other: Linoleum
Other: Carpeted

(6) Ceilings

X	Drywall		

(7) Excavation

Basement: 1058 S.F.
Crawl: 0 S.F.
Slab: 0 S.F.
Height to Joists: 0.0

(8) Basement

	Conc. Block
	Poured Conc.
	Stone
	Treated Wood
	Concrete Floor

(9) Basement Finish

	Recreation SF
	Living SF
	Walkout Doors (B)
	No Floor SF
	Walkout Doors (A)

(10) Floor Support

Joists:
Unsupported Len:
Cntr.Sup:

(11) Heating/Cooling

X	Gas		Oil		Elec.
	Wood		Coal		Steam

X	Forced Warm Air
	Wall Furnace
	Warm & Cool Air
	Heat Pump

	Central Air
	Wood Furnace

(12) Electric

150	Amps Service

No./Qual. of Fixtures

	Ex.	X	Ord.		Min

No. of Elec. Outlets

	Many	X	Ave.		Few

(13) Plumbing

	Average Fixture(s)
2	3 Fixture Bath
	2 Fixture Bath
	Softener, Auto
	Softener, Manual
	Solar Water Heat
	No Plumbing
	Extra Toilet
	Extra Sink
	Separate Shower
	Ceramic Tile Floor
	Ceramic Tile Wains
	Ceramic Tub Alcove
	Vent Fan

(14) Water/Sewer

	Public Water
	Public Sewer
1	Water Well
1	1000 Gal Septic
	2000 Gal Septic

Lump Sum Items:

(15) Built-ins

	Appliance Allow.
	Cook Top
	Dishwasher
	Garbage Disposal
	Bath Heater
	Vent Fan
	Hot Tub
	Unvented Hood
	Vented Hood
	Intercom
	Jacuzzi Tub
	Jacuzzi repl.Tub
	Oven
	Microwave
	Standard Range
	Self Clean Range
	Sauna
	Trash Compactor
	Central Vacuum
	Security System

(15) Fireplaces

	Interior 1 Story
	Interior 2 Story
	2nd/Same Stack
	Two Sided
	Exterior 1 Story
	Exterior 2 Story
	Prefab 1 Story
	Prefab 2 Story
	Heat Circulator
	Raised Hearth
	Wood Stove
	Direct-Vented Gas

Class: Fair
Effec. Age: 3
Floor Area:
Total Base New : 110,845 E.C.F.
Total Depr Cost: 99,760 X 1.297
Estimated T.C.V: 129,389

(16) Porches/Decks

Area	Type
16	Treated Wood
16	Treated Wood

(17) Garage

Year Built:
Car Capacity:
Class:
Exterior:
Brick Ven.:
Stone Ven.:
Common Wall:
Foundation:
Finished ?:
Auto. Doors:
Mech. Doors:
Area:
% Good:
Storage Area:
No Conc. Floor:

Bsmnt Garage:

Carport Area:
Roof:

Cost Est. for Res. Bldg: 1 Mobile Home PLAIN Cls Fair Blt 0
(11) Heating System: Forced Warm Air
Ground Area = 1178 SF Floor Area = 1178 SF.
Phy/Ab.Phy/Func/Econ/Comb. % Good=90/100/100/100/90
Building Areas

Type	Ext. Walls	Roof/Fnd.	Size	Cost New	Depr. Cost
Main Home	Siding	Comp.Shingle	1178		
Basement	Block, 6"		1058		
			Total:	96,398	86,758
Other Additions/Adjustments					
Plumbing					
3 Fixture Bath			1	2,745	2,470
Water/Sewer					
1000 Gal Septic			1	4,582	4,124
Water Well, 100 Feet			1	5,680	5,112
Deck					
Treated Wood			16	720	648
Treated Wood			16	720	648
			Totals:	110,845	99,760

Notes:

ECF (RESIDENTIAL) 1.297 => TCV: 129,389

*** Information herein deemed reliable but not guaranteed***

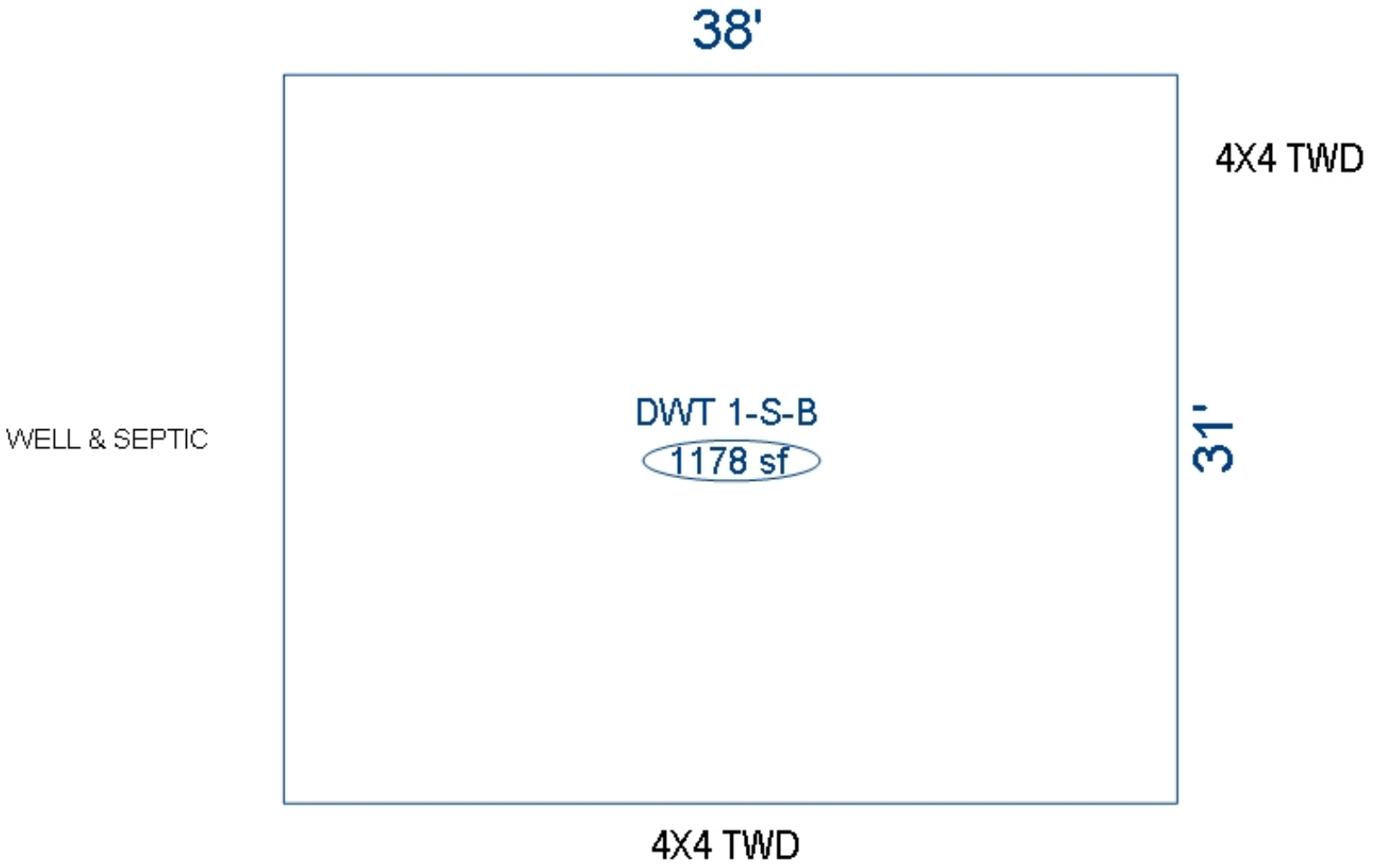

*** Information herein deemed reliable but not guaranteed***

Parcel Number: 2410-24-3106-01 Jurisdiction: GREENWOOD TWP County: WEXFORD Printed on 02/15/2024

Grantor	Grantee	Sale Price	Sale Date	Inst. Type	Terms of Sale	Liber & Page	Verified By	Prcnt. Trans.

Property Address	Class: RESIDENTIAL-IMPROV	Zoning:	Building Permit(s)	Date	Number	Status
8401 BUTTERMILK LN	School: MANTON CONSOLIDATED SCHOOLS		OTHER	07/26/2022	PB22-0204	ENTERED
	P.R.E. 100% 02/07/2023					
Owner's Name/Address	:					
CLIFFORD, MARK ALAN 8401 BUTTERMILK LN MANTON MI 49663	2024 Est TCV 154,425 TCV/TFA: 0.00					

X Improved | Vacant

Public Improvements

Dirt Road
Gravel Road
Paved Road
Storm Sewer
Sidewalk
Water
Sewer
Electric
Gas
Curb
Street Lights
Standard Utilities
Underground Utils.

Topography of Site

Level
Rolling
Low
High
Landscaped
Swamp
Wooded
Pond
Waterfront
Ravine
Wetland
Flood Plain

Who When What

DB 10/23/2023 INSPECTION

Tax Description

PAR A-8; COM AT S 1/4 COR OF SEC; N 1320.42 FT; W 172.59 FT; N07D45M52S W 149.47 FT; N07D44M19S W 456.27 FT TO POB: W 348.89 FT; N 718.1 FT; E 222.64 FT; S08D02M47S E 120.56 FT; S07D44M09S E 529.77 FT; S07D44M19S E 74.88 FT TO POB.AND PAR A-7; COM AT S 1/4 COR OF SEC; N 1320.42 FT; W 172.59 FT; N07D45M52S W 149.47 FT; N7D44M19S W 254.36 FT TO POB: W 383.88 FT; N 200.13 FT; E 348.89 FT; S07D44M19S E 201.91 FT TO POB. --1.68 A M/L-- TOG W & SUB TO EASMT GW SEC 24 T24N R10W -MANTON-

The Equalizer. Copyright (c) 1999 - 2009. Licensed To: Township of Greenwood, County of Wexford, Michigan

Land Value Estimates for Land Table 4010.LAND VALUES

Description	Frontage	Depth	* Factors * Front	Depth	Rate	%Adj.	Reason	Value
ACREAGE			6.390 Acres		5,112	100		32,666
			6.39 Total Acres			Total Est. Land Value =		32,666

Land Improvement Cost Estimates

Description	Rate	Size	% Good	Cash Value
D/W/P: 3.5 Concrete	5.82	1376	97	7,768
Wood Frame	18.03	528	50	4,760
Total Estimated Land Improvements True Cash Value =				12,528

Year	Land Value	Building Value	Assessed Value	Board of Review	Tribunal/ Other	Taxable Value
2024	16,300	60,900	77,200			59,398C
2023	11,500	48,100	59,600			56,570C
2022	0	0	0			0
2021	0	0	0			0

*** Information herein deemed reliable but not guaranteed***

Building Type

X	Single Family
	Mobile Home
	Town Home
	Duplex
	A-Frame
X	Wood Frame

Building Style: PLAIN

Yr Built	Remodeled
0	0

Condition: Good

Room List

	Basement
	1st Floor
	2nd Floor
	Bedrooms

(1) Exterior

X	Wood/Shingle
	Aluminum/Vinyl
	Brick
X	Insulation

(2) Windows

X	Many Avg. Few	X	Large Avg. Small

	Wood Sash
	Metal Sash
X	Vinyl Sash
	Double Hung
	Horiz. Slide
	Casement
	Double Glass
	Patio Doors
X	Storms & Screens

(3) Roof

X	Gable		Gambrel
	Hip		Mansard
	Flat		Shed

X	Asphalt Shingle

Chimney:

(3) Roof (cont.)

	Eavestrough
X	Insulation
0	Front Overhang
0	Other Overhang

(4) Interior

X	Drywall		Plaster
	Paneled		Wood T&G

Trim & Decoration

	Ex	X	Ord		Min

Size of Closets

	Lg	X	Ord		Small

Doors:		Solid	X	H.C.	

(5) Floors

Kitchen:
Other: Linoleum
Other: Carpeted

(6) Ceilings

X	Drywall

(7) Excavation

Basement: 0 S.F.
Crawl: 0 S.F.
Slab: 0 S.F.
Height to Joists: 0.0

(8) Basement

	Conc. Block
	Poured Conc.
	Stone
	Treated Wood
	Concrete Floor

(9) Basement Finish

	Recreation SF
	Living SF
	Walkout Doors (B)
	No Floor SF
	Walkout Doors (A)

(10) Floor Support

Joists:
Unsupported Len:
Cntr.Sup:

(11) Heating/Cooling

X	Gas		Oil		Elec.
	Wood		Coal		Steam

	Forced Air w/o Ducts
X	Forced Air w/ Ducts
	Forced Hot Water
	Electric Baseboard
	Elec. Ceil. Radiant
	Radiant (in-floor)
	Electric Wall Heat
	Space Heater
	Wall/Floor Furnace
	Forced Heat & Cool
	Heat Pump
	No Heating/Cooling

	Central Air
	Wood Furnace

(12) Electric

150	Amps Service

No./Qual. of Fixtures

	Ex.	X	Ord.		Min

No. of Elec. Outlets

	Many	X	Ave.		Few

(13) Plumbing

	Average Fixture(s)
1	3 Fixture Bath
	2 Fixture Bath
	Softener, Auto
	Softener, Manual
	Solar Water Heat
	No Plumbing
	Extra Toilet
	Extra Sink
	Separate Shower
	Ceramic Tile Floor
	Ceramic Tile Wains
	Ceramic Tub Alcove
	Vent Fan

(14) Water/Sewer

	Public Water
	Public Sewer
1	Water Well
1	1000 Gal Septic
	2000 Gal Septic

Lump Sum Items:

(15) Built-ins

	Appliance Allow.
	Cook Top
	Dishwasher
	Garbage Disposal
	Bath Heater
	Vent Fan
	Hot Tub
	Unvented Hood
	Vented Hood
	Intercom
	Jacuzzi Tub
	Jacuzzi repl.Tub
	Oven
	Microwave
	Standard Range
	Self Clean Range
	Sauna
	Trash Compactor
	Central Vacuum
	Security System

(15) Fireplaces

	Interior 1 Story
	Interior 2 Story
	2nd/Same Stack
	Two Sided
	Exterior 1 Story
	Exterior 2 Story
	Prefab 1 Story
	Prefab 2 Story
	Heat Circulator
	Raised Hearth
	Wood Stove
	Direct-Vented Gas

Class: CD
Effec. Age: 3
Floor Area: 0
Total Base New : 86,822 E.C.F.
Total Depr Cost: 84,218 X 1.297
Estimated T.C.V: 109,231

(16) Porches/Decks

Area	Type

(17) Garage

Year Built: 2022
Car Capacity:
Class: CD
Exterior: Pole
Brick Ven.: 0
Stone Ven.: 0
Common Wall: Detache
Foundation: 18 Inch
Finished ?:
Auto. Doors: 0
Mech. Doors: 0
Area: 3520
% Good: 0
Storage Area: 0
No Conc. Floor: 0

Bsmnt Garage:

Carport Area:
Roof:

Cost Est. for Res. Bldg: 1 Single Family PLAIN Cls CD Blt 0
(11) Heating System: Forced Air w/ Ducts
Ground Area = 0 SF Floor Area = 0 SF.
Phy/Ab.Phy/Func/Econ/Comb. % Good=97/100/100/100/97
Building Areas

Stories	Exterior	Foundation	Size	Cost New	Depr. Cost
Other Additions/Adjustments					
Water/Sewer					
1000 Gal Septic			1	4,582	4,445
Water Well, 100 Feet			1	5,680	5,510
Garages					
Class: CD Exterior: Pole (Unfinished)					
Base Cost			3520	76,560	74,263
			Totals:	86,822	84,218

Notes:

ECF (RESIDENTIAL) 1.297 => TCV: 109,231

*** Information herein deemed reliable but not guaranteed***

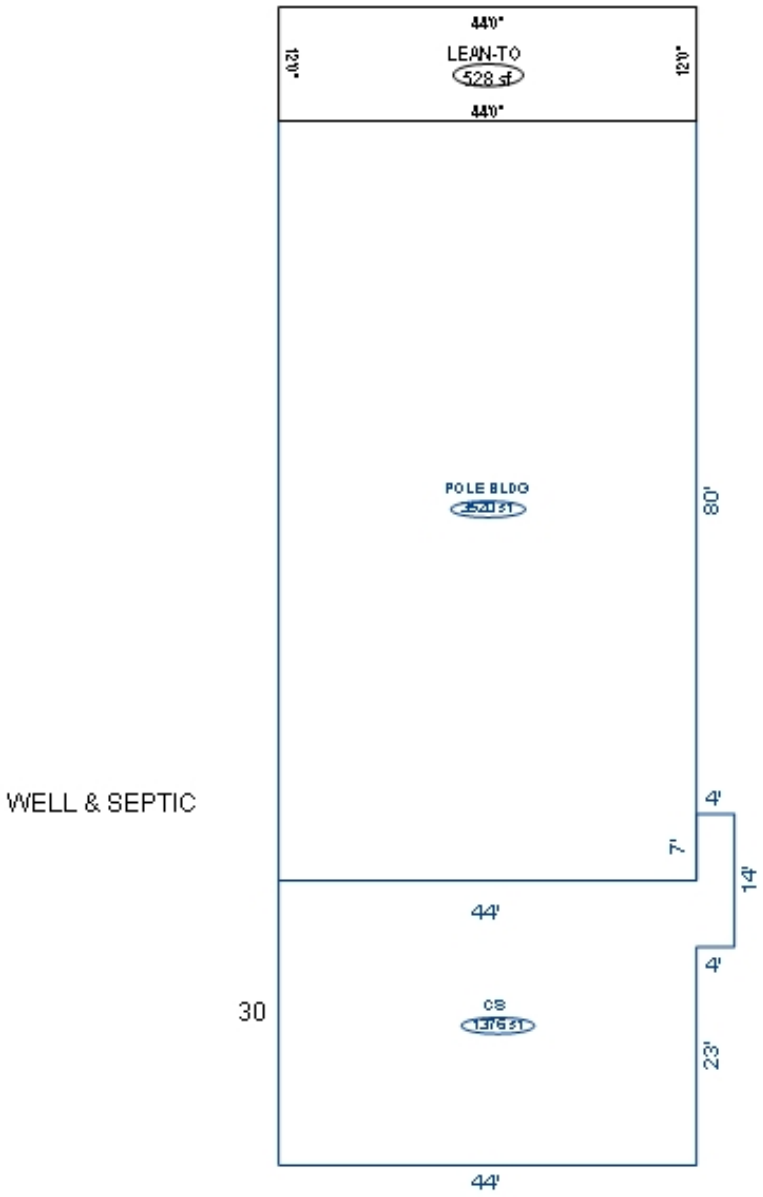

*** Information herein deemed reliable but not guaranteed***

Parcel Number: 2410-24-3107 Jurisdiction: GREENWOOD TWP County: WEXFORD Printed on 02/15/2024

Grantor	Grantee	Sale Price	Sale Date	Inst. Type	Terms of Sale	Liber & Page	Verified By	Prcnt. Trans.
FEDERAL NATIONAL MORTGAGE	HARRISON, STEPHANIE	80,900	11/15/2013	WD	11-FROM LENDING INSTITUTI	664/786	DEED	100.0
NORTHWESTERN MORTGAGE CO	FEDERAL NATIONAL MORTGAGE	0	07/18/2013	QC	17-LENDING TO LENDING	660/2475	DEED	0.0
DOUGLASS, ADAM	NORTHWESTERN MORTGAGE CO	0	01/11/2013	SD	10-FORECLOSURE	655/707	DEED	0.0
DOUGLASS, KURT & COLEEN	DOUGLASS, ADAM	5,000	02/24/2003	WD	03-ARM'S LENGTH	470:815	DEED	0.0

Property Address

8518 BUTTERMILK LN

Owner's Name/Address

HARRISON, STEPHANIE
8518 BUTTERMILK LN
MANTON MI 49663

Tax Description

PAR A-9; COM AT S 1/4 COR OF SEC; N 1320.42 FT TO POB: W 172.59 FT; N07D45M52S W 149.47 FT; N 07D44M19S W 208.94 FT; E 516.09 FT; S 355 FT; W 294.28 FT TO POB. --4.01 A M/L- TOG W & SUB TO EASMT GW SEC 24 T24N R10W -MANTON- [[ASSESSED W/ 24-3101 '02

Comments/Influences

The Equalizer. Copyright (c) 1999 - 2009. Licensed To: Township of Greenwood, County of Wexford, Michigan

Class: RESIDENTIAL-IMPROV Zoning:

School: MANTON CONSOLIDATED SCHOOLS

P.R.E. 100% 10/04/2014

:

2024 Est TCV 226,324 TCV/TFA: 179.62

Building Permit(s)	Date	Number	Status
RESIDENTIAL - NEW	10/29/2003	PM7173	
RESIDENTIAL - NEW	09/04/2003	PM6982	
RESIDENTIAL - NEW	08/07/2003	PP3131	
RESIDENTIAL - NEW	07/08/2003	PE15438	

X Improved | Vacant

Public Improvements

- X Dirt Road
- Gravel Road
- Paved Road
- Storm Sewer
- Sidewalk
- Water
- Sewer
- X Electric
- Gas
- Curb
- Street Lights
- Standard Utilities
- Underground Utils.

Topography of Site

- X Level
- Rolling
- Low
- High
- Landscaped
- Swamp
- Wooded
- Pond
- Waterfront
- Ravine
- Wetland
- Flood Plain
- X PINES/OPEN

Who	When	What
GLA	05/30/2017	INSPECTION
GLA	08/02/2014	INSPECTION

Land Value Estimates for Land Table 4010.LAND VALUES

Description	Frontage	Depth	* Factors * Front	Depth	Rate	%Adj.	Reason	Value
ACREAGE			4.010 Acres		5,031	100		20,174
			4.01 Total Acres		Total Est. Land Value =			20,174

Land Improvement Cost Estimates

Description	Rate	Size	% Good	Cash Value
D/W/P: 4in Concrete	7.01	112	42	330
D/W/P: 4in Concrete	7.01	80	42	236
Wood Frame	23.57	320	22	1,659
Total Estimated Land Improvements True Cash Value =				2,225

Year	Land Value	Building Value	Assessed Value	Board of Review	Tribunal/ Other	Taxable Value
2024	10,100	103,100	113,200			69,571C
2023	9,400	84,200	93,600			66,259C
2022	7,000	71,000	78,000			63,104C
2021	8,400	71,700	80,100			61,089C

*** Information herein deemed reliable but not guaranteed***

Building Type

X	Single Family
	Mobile Home
	Town Home
	Duplex
	A-Frame
X	Wood Frame

Building Style: PLAIN

Yr Built	Remodeled
0	0

Condition: Good

Room List

	Basement
	1st Floor
	2nd Floor
	Bedrooms

(1) Exterior

	Wood/Shingle
X	Aluminum/Vinyl
	Brick
X	Insulation

(2) Windows

X	Many Avg. Few	X	Large Avg. Small

	Wood Sash
	Metal Sash
X	Vinyl Sash
	Double Hung
	Horiz. Slide
	Casement
	Double Glass
	Patio Doors
X	Storms & Screens

(3) Roof

X	Gable		Gambrel
	Hip		Mansard
	Flat		Shed

X	Asphalt Shingle

Chimney:

(3) Roof (cont.)

	Eavestrough
X	Insulation
0	Front Overhang
0	Other Overhang

(4) Interior

X	Drywall Paneled		Plaster Wood T&G

Trim & Decoration

	Ex	X	Ord		Min

Size of Closets

	Lg	X	Ord		Small

Doors: | | Solid | X | H.C.

(5) Floors

Kitchen:
Other: Linoleum
Other: Carpeted

(6) Ceilings

X	Drywall		

(7) Excavation

Basement: 840 S.F.
Crawl: 0 S.F.
Slab: 0 S.F.
Height to Joists: 0.0

(8) Basement

	Conc. Block
	Poured Conc.
	Stone
	Treated Wood
	Concrete Floor

(9) Basement Finish

	Recreation SF
	Living SF
	Walkout Doors (B)
	No Floor SF
	Walkout Doors (A)

(10) Floor Support

Joists:
Unsupported Len:
Cntr.Sup:

(11) Heating/Cooling

X	Gas Wood		Oil Coal		Elec. Steam

	Forced Air w/o Ducts
X	Forced Air w/ Ducts
	Forced Hot Water
	Electric Baseboard
	Elec. Ceil. Radiant
	Radiant (in-floor)
	Electric Wall Heat
	Space Heater
	Wall/Floor Furnace
	Forced Heat & Cool
	Heat Pump
	No Heating/Cooling
	Central Air
	Wood Furnace

(12) Electric

150	Amps Service

No./Qual. of Fixtures

	Ex.	X	Ord.		Min

No. of Elec. Outlets

	Many	X	Ave.		Few

(13) Plumbing

2	Average Fixture(s)
	3 Fixture Bath
	2 Fixture Bath
	Softener, Auto
	Softener, Manual
	Solar Water Heat
	No Plumbing
	Extra Toilet
	Extra Sink
	Separate Shower
	Ceramic Tile Floor
	Ceramic Tile Wains
	Ceramic Tub Alcove
	Vent Fan

(14) Water/Sewer

	Public Water
	Public Sewer
1	Water Well
1	1000 Gal Septic
	2000 Gal Septic

Lump Sum Items:

(15) Built-ins

	Appliance Allow.
	Cook Top
	Dishwasher
	Garbage Disposal
	Bath Heater
	Vent Fan
	Hot Tub
	Unvented Hood
	Vented Hood
	Intercom
	Jacuzzi Tub
	Jacuzzi repl.Tub
	Oven
	Microwave
	Standard Range
	Self Clean Range
	Sauna
	Trash Compactor
	Central Vacuum
	Security System

(15) Fireplaces

	Interior 1 Story
	Interior 2 Story
	2nd/Same Stack
	Two Sided
	Exterior 1 Story
1	Exterior 2 Story
	Prefab 1 Story
	Prefab 2 Story
	Heat Circulator
	Raised Hearth
	Wood Stove
	Direct-Vented Gas

Class: C -5
Effec. Age: 20
Floor Area: 1,260
Total Base New : 196,569 E.C.F.
Total Depr Cost: 157,228 X 1.297
Estimated T.C.V: 203,925

(16) Porches/Decks

Area	Type
488	WCP (1 Story)

(17) Garage

Year Built:
Car Capacity:
Class:
Exterior:
Brick Ven.:
Stone Ven.:
Common Wall:
Foundation:
Finished ?:
Auto. Doors:
Mech. Doors:
Area:
% Good:
Storage Area:
No Conc. Floor:

Bsmnt Garage:

Carport Area:
Roof:

Cost Est. for Res. Bldg: 1 Single Family PLAIN Cls C -5 Blt 0
(11) Heating System: Forced Air w/ Ducts
Ground Area = 840 SF Floor Area = 1260 SF.
Phy/Ab.Phy/Func/Econ/Comb. % Good=80/100/100/100/80
Building Areas

Stories	Exterior	Foundation	Size	Cost New	Depr. Cost
1.5 Story	Siding	Basement	840		
			Total:	157,027	125,595
Other Additions/Adjustments					
Plumbing					
3 Fixture Bath			1	4,678	3,742
Water/Sewer					
1000 Gal Septic			1	4,899	3,919
Water Well, 100 Feet			1	5,849	4,679
Porches					
WCP (1 Story)			488	16,036	12,829
Fireplaces					
Exterior 2 Story			1	8,080	6,464
			Totals:	196,569	157,228

Notes:

ECF (RESIDENTIAL) 1.297 => TCV: 203,925

*** Information herein deemed reliable but not guaranteed***

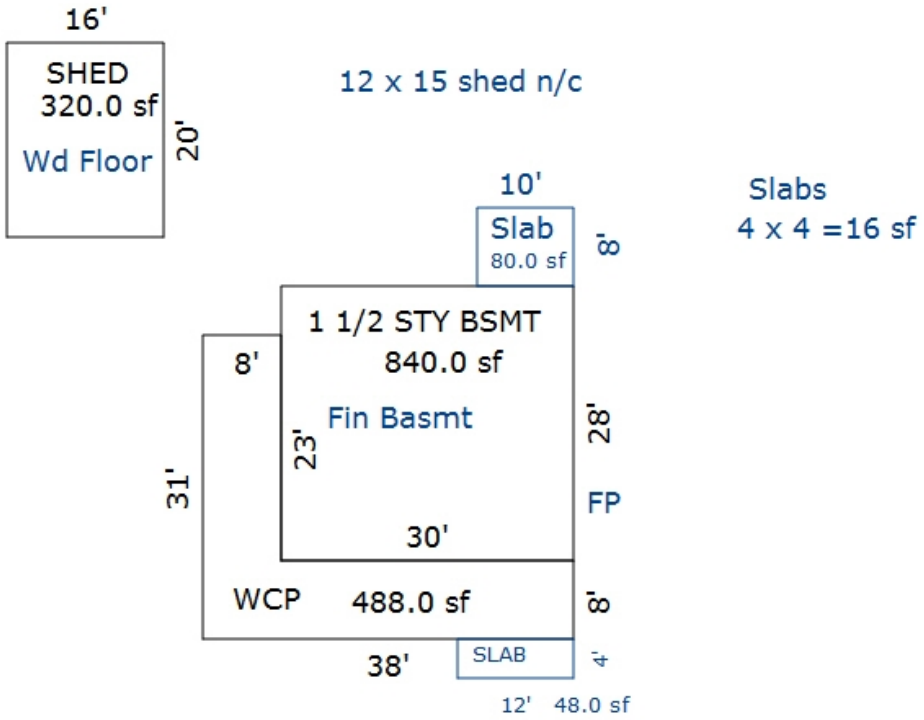

Sketch by Apex Sketch

*** Information herein deemed reliable but not guaranteed***

Parcel Number: 2410-24-3201 Jurisdiction: GREENWOOD TWP County: WEXFORD Printed on 02/15/2024

Grantor	Grantee	Sale Price	Sale Date	Inst. Type	Terms of Sale	Liber & Page	Verified By	Prcnt. Trans.
WILDER, MARY S	WISER, RANDOLPH A & NORA G	55,000	08/11/2017	WD	03-ARM'S LENGTH	680 /2519	DEED	100.0
OLOFSON, JAMES	WILDER, MARY S	43,000	07/24/2012	WD	03-ARM'S LENGTH	650/538	DEED	100.0
SCOTT, VERNA M	OLOFSON, JAMES	55,500	02/10/2004	WD	03-ARM'S LENGTH	535:469	DEED	0.0

Property Address
8450 N 35 RD

Owner's Name/Address
WISER, RANDOLPH A & NORA G
8450 N 35 RD
MANTON MI 49663

Tax Description
COM AT SW COR OF NW 1/4 OF SW 1/4: N 990 FT; E 660 FT; S 990 FT; W 660 FT TO POB. --15 A M/L-- GW. SEC. 24 T24N R10W -MANTON-

Comments/Influences

Default Comments

The Equalizer. Copyright (c) 1999 - 2009. Licensed To: Township of Greenwood, County of Wexford, Michigan

Class: RESIDENTIAL-IMPROV Zoning:
School: MANTON CONSOLIDATED SCHOOLS
P.R.E. 100% 01/02/2019
:
2024 Est TCV 112,507 TCV/TFA: 95.34

Building Permit(s)	Date	Number	Status
RESIDENTIAL - REMODEL	05/04/2004	PB12157	

X Improved | Vacant

	Public Improvements
	Dirt Road
X	Gravel Road
	Paved Road
	Storm Sewer
	Sidewalk
	Water
	Sewer
X	Electric
	Gas
	Curb
	Street Lights
	Standard Utilities
	Underground Utils.

	Topography of Site
X	Level
X	Rolling
X	Low
	High
	Landscaped
	Swamp
X	Wooded
	Pond
	Waterfront
	Ravine
	Wetland
	Flood Plain
X	PINES/OPEN

Who	When	What
GLA	05/30/2017	INSPECTION
LM	10/21/2010	INSPECTED
LM	08/24/2012	SALES INSP

Land Value Estimates for Land Table 4010.LAND VALUES

Description	Frontage	Depth	* Factors * Front	Depth	Rate	%Adj.	Reason	Value
ACREAGE			14.250 Acres		3,351	100		47,753
ROW			0.750 Acres		0	100		0
			15.00 Total Acres		Total Est. Land Value =			47,753

Land Improvement Cost Estimates

Description	Rate	Size	% Good	Cash Value
D/W/P: 4in Concrete	6.53	200	22	287
D/W/P: 4in Concrete	6.53	32	12	25
D/W/P: 4in Concrete	6.53	239	45	702
Wood Frame	32.04	60	45	865
Total Estimated Land Improvements True Cash Value =				1,879

Year	Land Value	Building Value	Assessed Value	Board of Review	Tribunal/ Other	Taxable Value
2024	23,900	32,400	56,300			32,947C
2023	18,500	26,200	44,700			31,379C
2022	16,500	21,900	38,400			29,885C
2021	17,100	18,800	35,900			28,931C

*** Information herein deemed reliable but not guaranteed***

Building Type

	Single Family
X	Mobile Home
	Town Home
	Duplex
	A-Frame

X	Wood Frame

Building Style: SWT/DWT

Yr Built	Remodeled
0	0

Condition: Fair

Room List

	Basement
	1st Floor
	2nd Floor
	Bedrooms

(1) Exterior

X	Wood/Shingle
	Aluminum/Vinyl
	Brick
	Insulation

(2) Windows

X	Many Avg. Few		Large Avg. Small

	Wood Sash
	Metal Sash
	Vinyl Sash
	Double Hung
	Horiz. Slide
	Casement
	Double Glass
	Patio Doors
	Storms & Screens

(3) Roof

X	Gable		Gambrel
	Hip		Mansard
	Flat		Shed

X	Asphalt Shingle

Chimney: Brick

(3) Roof (cont.)

	Eavestrough
	Insulation
0	Front Overhang
0	Other Overhang

(4) Interior

	Drywall		Plaster
	Paneled		Wood T&G

Trim & Decoration

	Ex	X	Ord		Min

Size of Closets

	Lg	X	Ord		Small

Doors:		Solid	X	H.C.	

(5) Floors

Kitchen:
Other:
Other:

(6) Ceilings

(7) Excavation

Basement: 0 S.F.
Crawl: 256 S.F.
Slab: 0 S.F.
Height to Joists: 0.0

(8) Basement

	Conc. Block
	Poured Conc.
	Stone
	Treated Wood
	Concrete Floor

(9) Basement Finish

	Recreation SF
	Living SF
	Walkout Doors (B)
	No Floor SF
	Walkout Doors (A)

(10) Floor Support

Joists:
Unsupported Len:
Cntr.Sup:

(11) Heating/Cooling

X	Gas		Oil		Elec.
	Wood		Coal		Steam

X	Forced Warm Air
	Wall Furnace
	Warm & Cool Air
	Heat Pump

	Central Air
	Wood Furnace

(12) Electric

0	Amps Service

No./Qual. of Fixtures

	Ex.	X	Ord.		Min

No. of Elec. Outlets

	Many	X	Ave.		Few

(13) Plumbing

	Average Fixture(s)
1	3 Fixture Bath
	2 Fixture Bath
	Softener, Auto
	Softener, Manual
	Solar Water Heat
	No Plumbing
	Extra Toilet
	Extra Sink
	Separate Shower
	Ceramic Tile Floor
	Ceramic Tile Wains
	Ceramic Tub Alcove
	Vent Fan

(14) Water/Sewer

	Public Water
	Public Sewer
1	Water Well
1	1000 Gal Septic
	2000 Gal Septic

Lump Sum Items:

(15) Built-ins

	Appliance Allow.
	Cook Top
	Dishwasher
	Garbage Disposal
	Bath Heater
	Vent Fan
	Hot Tub
	Unvented Hood
	Vented Hood
	Intercom
	Jacuzzi Tub
	Jacuzzi repl.Tub
	Oven
	Microwave
	Standard Range
	Self Clean Range
	Sauna
	Trash Compactor
	Central Vacuum
	Security System

(15) Fireplaces

	Interior 1 Story
	Interior 2 Story
	2nd/Same Stack
	Two Sided
	Exterior 1 Story
	Exterior 2 Story
	Prefab 1 Story
	Prefab 2 Story
	Heat Circulator
	Raised Hearth
	Wood Stove
	Direct-Vented Gas

Class: Fair
Effec. Age: 20
Floor Area:
Total Base New : 105,387 E.C.F.
Total Depr Cost: 48,477 X 1.297
Estimated T.C.V: 62,875

(16) Porches/Decks

Area	Type
16	WPP
144	Treated Wood

(17) Garage

Year Built:
Car Capacity:
Class: CD
Exterior: Siding
Brick Ven.: 0
Stone Ven.: 0
Common Wall: Detache
Foundation: 18 Inch
Finished ?:
Auto. Doors: 0
Mech. Doors: 0
Area: 576
% Good: 0
Storage Area: 0
No Conc. Floor: 0

Bsmnt Garage:

Carport Area:
Roof:

Cost Est. for Res. Bldg: 1 Mobile Home SWT/DWT Cls Fair Blt 0
(11) Heating System: Forced Warm Air
Ground Area = 1180 SF Floor Area = 1180 SF.
Phy/Ab.Phy/Func/Econ/Comb. % Good=46/100/100/100/46
Building Areas

Type	Ext. Walls	Roof/Fnd.	Size	Cost New	Depr. Cost
Main Home	Siding	Comp.Shingle	924		
Addition	Siding	Crawl	256		
			Total:	69,491	31,965
Other Additions/Adjustments					
Skirting, Metal or Vinyl, Vertical			144	1,606	739
Water/Sewer					
1000 Gal Septic			1	4,582	2,108
Water Well, 100 Feet			1	5,680	2,613
Deck					
Treated Wood			144	3,288	1,512
Garages					
Class: CD Exterior: Siding Foundation: 18 Inch (Unfinished)					
Base Cost			576	19,935	9,170
Porches					
WPP			16	805	370
			Totals:	105,387	48,477

Notes:
ECF (RESIDENTIAL) 1.297 => TCV: 62,875

*** Information herein deemed reliable but not guaranteed***

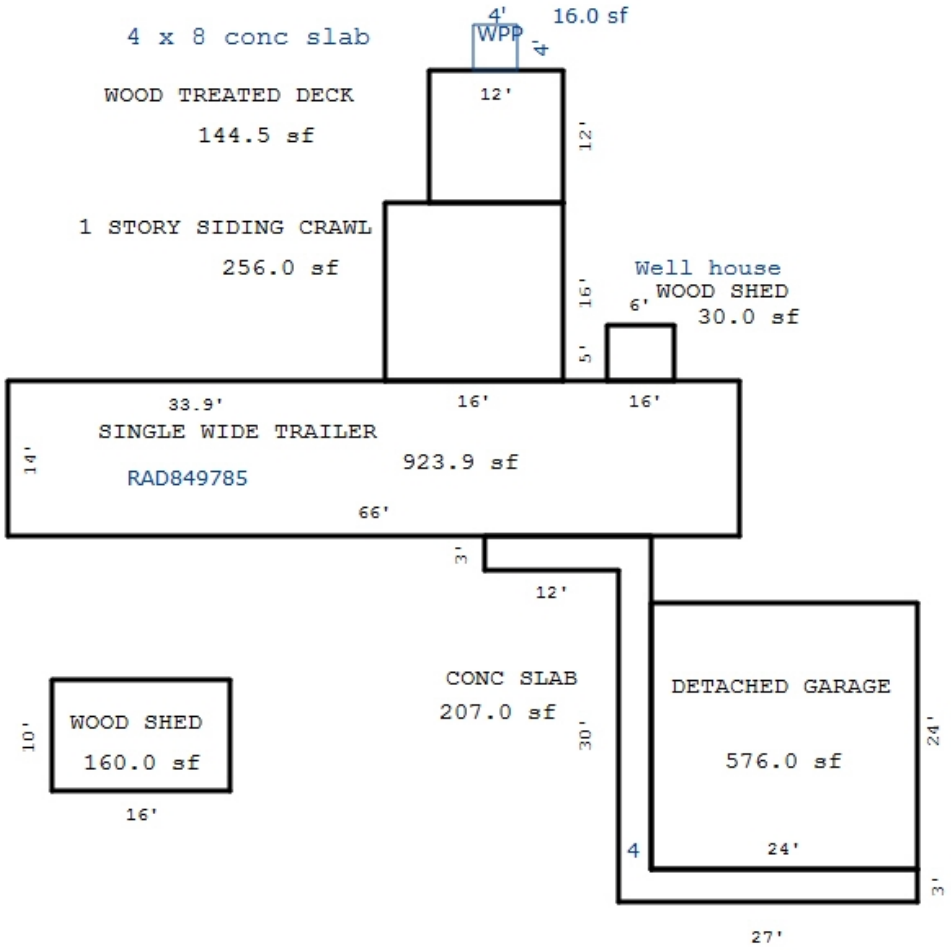

Sketch by Apex Sketch

*** Information herein deemed reliable but not guaranteed***

Parcel Number: 2410-24-3202 Jurisdiction: GREENWOOD TWP County: WEXFORD Printed on 02/15/2024

Grantor	Grantee	Sale Price	Sale Date	Inst. Type	Terms of Sale	Liber & Page	Verified By	Prcnt. Trans.
SCOTT, VERNA M	GANBRECHT, TERRY & ALICE	16,000	11/08/2001	QC	09-FAMILY	384:465	DEED	0.0

Property Address

Owner's Name/Address

GARBRECHT, TERRY
& ALICE
4148 E 10 RD
MANTON MI 49663

Tax Description

BEG AT W 1/4 COR OF SEC: E 1289.87 FT; S 1316.57 FT; W 626.52 FT; N 990.58 FT; W 660.39 FT; N 322.22 FT TO POB. -23.87 A M/L- GW SEC 24 T24N R10W -MANTON- [[ASSESSED W/ 3201 '01

Comments/Influences

Class: RESIDENTIAL-VACANT Zoning:

School: MANTON CONSOLIDATED SCHOOLS

P.R.E. 0%

:

2024 Est TCV 23,749

Building Permit(s)	Date	Number	Status

	Improved	X	Vacant

	Public Improvements
	Dirt Road
X	Gravel Road
	Paved Road
	Storm Sewer
	Sidewalk
	Water
	Sewer
X	Electric
	Gas
	Curb
	Street Lights
	Standard Utilities
	Underground Utils.

	Topography of Site
X	Level
X	Rolling
X	Low
	High
	Landscaped
	Swamp
X	Wooded
	Pond
	Waterfront
	Ravine
	Wetland
	Flood Plain
X	PINES

Who	When	What
GLA	05/30/2017	INSPECTION

Land Value Estimates for Land Table 4010.LAND VALUES

Description	Frontage	Depth	* Factors * Front	Depth	Rate	%Adj.	Reason	Value
ACREAGE			24.760 Acres		2,741	35	PIPELINE & SWAMPY	23,749
ROW			0.240 Acres		0	100		0
			25.00 Total Acres		Total Est. Land Value =			23,749

Year	Land Value	Building Value	Assessed Value	Board of Review	Tribunal/ Other	Taxable Value
2024	11,900	0	11,900			9,005C
2023	10,800	0	10,800			8,577C
2022	9,500	0	9,500			8,169C
2021	8,700	0	8,700			7,909C

The Equalizer. Copyright (c) 1999 - 2009.
Licensed To: Township of Greenwood, County of Wexford, Michigan

*** Information herein deemed reliable but not guaranteed***

Parcel Number: 2410-24-3301 Jurisdiction: GREENWOOD TWP County: WEXFORD Printed on 02/15/2024

Grantor	Grantee	Sale Price	Sale Date	Inst. Type	Terms of Sale	Liber & Page	Verified By	Prcnt. Trans.
KOSCHMIDER, EDWARD L.	MALE, ARTHUR & GALE	16,500	10/30/1998	WD	03-ARM'S LENGTH	364:254	DEED	0.0

Property Address

Owner's Name/Address

MALE, ARTHUR E
& GALE K
313 41ST SW
WYOMING MI 49548

Tax Description

N 1/2 OF SW 1/4 OF SW 1/4 20 A. GW. SEC. 24 T24N R10W -MANTON-

Comments/Influences

The Equalizer. Copyright (c) 1999 - 2009. Licensed To: Township of Greenwood, County of Wexford, Michigan

Class: RESIDENTIAL-VACANT Zoning:

School: MANTON CONSOLIDATED SCHOOLS

P.R.E. 0%

:

2024 Est TCV 62,400

Building Permit(s)	Date	Number	Status

	Improved	X	Vacant

	Public Improvements
X	Dirt Road
X	Gravel Road
	Paved Road
	Storm Sewer
	Sidewalk
	Water
	Sewer
X	Electric
	Gas
	Curb
	Street Lights
	Standard Utilities
	Underground Utils.

	Topography of Site
X	Level
X	Rolling
X	Low
	High
	Landscaped
	Swamp
X	Wooded
	Pond
	Waterfront
	Ravine
	Wetland
	Flood Plain
X	PINES

Who	When	What
GLA	05/30/2017	INSPECTION

Land Value Estimates for Land Table 4010.LAND VALUES

Description	Frontage	Depth	* Factors * Front	Depth	Rate	%Adj.	Reason	Value
ACREAGE			19.500 Acres		3,200	100		62,400
ROW			0.500 Acres		0	100		0
			20.00 Total Acres		Total Est. Land Value =			62,400

Year	Land Value	Building Value	Assessed Value	Board of Review	Tribunal/ Other	Taxable Value
2024	31,200	0	31,200			17,882C
2023	25,400	0	25,400			17,031C
2022	21,500	0	21,500			16,220C
2021	19,800	0	19,800			15,702C

*** Information herein deemed reliable but not guaranteed***

Parcel Number: 2410-24-3302 Jurisdiction: GREENWOOD TWP County: WEXFORD Printed on 02/15/2024

Grantor	Grantee	Sale Price	Sale Date	Inst. Type	Terms of Sale	Liber & Page	Verified By	Prcnt. Trans.
HUBBARD, LAURENCE W LE	HUBBARD, MICHAEL W & LYNNE	100	08/11/2022	QC	09-FAMILY	694/1495	DEED	0.0
HUBBARD, LAURENCE W SURV O	HUBBARD, LAURENCE W LE	0	07/24/2014	WD	18-LIFE ESTATE	669/2759	DEED	0.0
WITVOET, JERRY J.	HUBBARD, LAURENCE & ROSEAN	15,750	11/05/1997	WD	03-ARM'S LENGTH	358:70	DEED	0.0
GLENN, JOHN R.	VELTHOUSE ET AL, DOUGLAS	12,500	08/01/1991	LC	03-ARM'S LENGTH	327:128	DEED	0.0

Property Address

8090 N 35 RD

Owner's Name/Address

HUBBARD, MICHAEL W & LYNNETTE
11805 MUSKRAT RD
GREENVILLE MI 48838

Tax Description

PAR "A" DESC AS BEG AT SW COR; N 407.08 FT TO POB: N 249.38 FT; E 642.77 FT; S 250.32 FT; W 642.47 FT TO POB. 3.68 A M/L GW. SEC 24 T24N R10W -MANTON-

Comments/Influences

The Equalizer. Copyright (c) 1999 - 2009. Licensed To: Township of Greenwood, County of Wexford, Michigan

Class: RESIDENTIAL-IMPROV Zoning:

School: MANTON CONSOLIDATED SCHOOLS

P.R.E. 0%

:

2024 Est TCV 92,824 TCV/TFA: 111.57

Building Permit(s)	Date	Number	Status

X Improved | Vacant

	Public Improvements
	Dirt Road
X	Gravel Road
	Paved Road
	Storm Sewer
	Sidewalk
	Water
	Sewer
X	Electric
	Gas
	Curb
	Street Lights
	Standard Utilities
	Underground Utils.

	Topography of Site
	Level
X	Rolling
X	Low
	High
	Landscaped
X	Swamp
X	Wooded
	Pond
	Waterfront
	Ravine
	Wetland
	Flood Plain
X	PINES

Who	When	What
GLA	05/30/2017	INSPECTION

Land Value Estimates for Land Table 4010.LAND VALUES

Description	Frontage	Depth	* Factors * Front	Depth	Rate	%Adj.	Reason	Value
ACREAGE			3.490 Acres		5,256	100		18,344
ROW			0.190 Acres		0	100		0
			3.68 Total Acres		Total Est. Land Value =			18,344

Land Improvement Cost Estimates

Description	Rate	Size	% Good	Cash Value
D/W/P: 4in Concrete	6.11	79	45	217
Wood Frame	22.35	120	45	1,207
Wood Frame	19.62	208	45	1,836
Total Estimated Land Improvements True Cash Value =				3,260

Year	Land Value	Building Value	Assessed Value	Board of Review	Tribunal/ Other	Taxable Value
2024	9,200	37,200	46,400			21,478C
2023	8,200	30,800	39,000			20,456C
2022	6,700	26,300	33,000			19,482C
2021	7,300	26,600	33,900			18,860C

*** Information herein deemed reliable but not guaranteed***

Building Type

X	Single Family
	Mobile Home
	Town Home
	Duplex
	A-Frame
X	Wood Frame

Building Style: PLAIN

Yr Built	Remodeled
0	0

Condition: Good

Room List

	Basement
	1st Floor
	2nd Floor
	Bedrooms

(1) Exterior

X	Wood/Shingle
	Aluminum/Vinyl
	Brick
X	Insulation

(2) Windows

	Many		Large
X	Avg.	X	Avg.
	Few		Small

X	Wood Sash
	Metal Sash
	Vinyl Sash
	Double Hung
	Horiz. Slide
	Casement
	Double Glass
	Patio Doors
X	Storms & Screens

(3) Roof

X	Gable		Gambrel
	Hip		Mansard
	Flat		Shed

X	Asphalt Shingle

Chimney:

(3) Roof (cont.)

	Eavestrough
X	Insulation
0	Front Overhang
0	Other Overhang

(4) Interior

X	Drywall		Plaster
	Paneled		Wood T&G

Trim & Decoration

	Ex	X	Ord		Min

Size of Closets

	Lg	X	Ord		Small

Doors:		Solid	X	H.C.	

(5) Floors

Kitchen:
Other: Linoleum
Other: Carpeted

(6) Ceilings

X	Drywall

(7) Excavation

Basement: 0 S.F.
Crawl: 832 S.F.
Slab: 0 S.F.
Height to Joists: 0.0

(8) Basement

	Conc. Block
	Poured Conc.
	Stone
	Treated Wood
	Concrete Floor

(9) Basement Finish

	Recreation SF
	Living SF
	Walkout Doors (B)
	No Floor SF
	Walkout Doors (A)

(10) Floor Support

Joists:
Unsupported Len:
Cntr.Sup:

(11) Heating/Cooling

X	Gas		Oil		Elec.
	Wood		Coal		Steam

	Forced Air w/o Ducts
X	Forced Air w/ Ducts
	Forced Hot Water
	Electric Baseboard
	Elec. Ceil. Radiant
	Radiant (in-floor)
	Electric Wall Heat
	Space Heater
	Wall/Floor Furnace
	Forced Heat & Cool
	Heat Pump
	No Heating/Cooling

	Central Air
	Wood Furnace

(12) Electric

150	Amps Service

No./Qual. of Fixtures

	Ex.	X	Ord.		Min

No. of Elec. Outlets

	Many	X	Ave.		Few

(13) Plumbing

	Average Fixture(s)
1	3 Fixture Bath
	2 Fixture Bath
	Softener, Auto
	Softener, Manual
	Solar Water Heat
	No Plumbing
	Extra Toilet
	Extra Sink
	Separate Shower
	Ceramic Tile Floor
	Ceramic Tile Wains
	Ceramic Tub Alcove
	Vent Fan

(14) Water/Sewer

	Public Water
	Public Sewer
1	Water Well
1	1000 Gal Septic
	2000 Gal Septic

Lump Sum Items:

(15) Built-ins

	Appliance Allow.
	Cook Top
	Dishwasher
	Garbage Disposal
	Bath Heater
	Vent Fan
	Hot Tub
	Unvented Hood
	Vented Hood
	Intercom
	Jacuzzi Tub
	Jacuzzi repl.Tub
	Oven
	Microwave
	Standard Range
	Self Clean Range
	Sauna
	Trash Compactor
	Central Vacuum
	Security System

(15) Fireplaces

	Interior 1 Story
	Interior 2 Story
	2nd/Same Stack
	Two Sided
	Exterior 1 Story
	Exterior 2 Story
	Prefab 1 Story
	Prefab 2 Story
	Heat Circulator
	Raised Hearth
	Wood Stove
	Direct-Vented Gas

Class: D
Effec. Age: 49
Floor Area: 832
Total Base New : 107,760 E.C.F.
Total Depr Cost: 54,911 X 1.297
Estimated T.C.V: 71,220

(16) Porches/Decks

Area	Type
128	Treated Wood

(17) Garage

Year Built:
Car Capacity:
Class:
Exterior:
Brick Ven.:
Stone Ven.:
Common Wall:
Foundation:
Finished ?:
Auto. Doors:
Mech. Doors:
Area:
% Good:
Storage Area:
No Conc. Floor:

Bsmnt Garage:

Carport Area:
Roof:

Cost Est. for Res. Bldg: 1 Single Family PLAIN Cls D Blt 0
(11) Heating System: Forced Air w/ Ducts
Ground Area = 832 SF Floor Area = 832 SF.
Phy/Ab.Phy/Func/Econ/Comb. % Good=51/100/100/100/51
Building Areas

Stories	Exterior	Foundation	Size	Cost New	Depr. Cost	
1 Story	Siding	Crawl Space	832			
			Total:	94,291	48,088	
Other Additions/Adjustments						
Water/Sewer						
1000 Gal Septic			1	4,293	2,189	
Water Well, 100 Feet			1	5,545	2,828	
Deck						
Treated Wood			128	2,976	1,518	
Local Cost Items						
SHED #3			84	655	288	*4
			Totals:	107,760	54,911	

Notes:

ECF (RESIDENTIAL) 1.297 => TCV: 71,220

*** Information herein deemed reliable but not guaranteed***

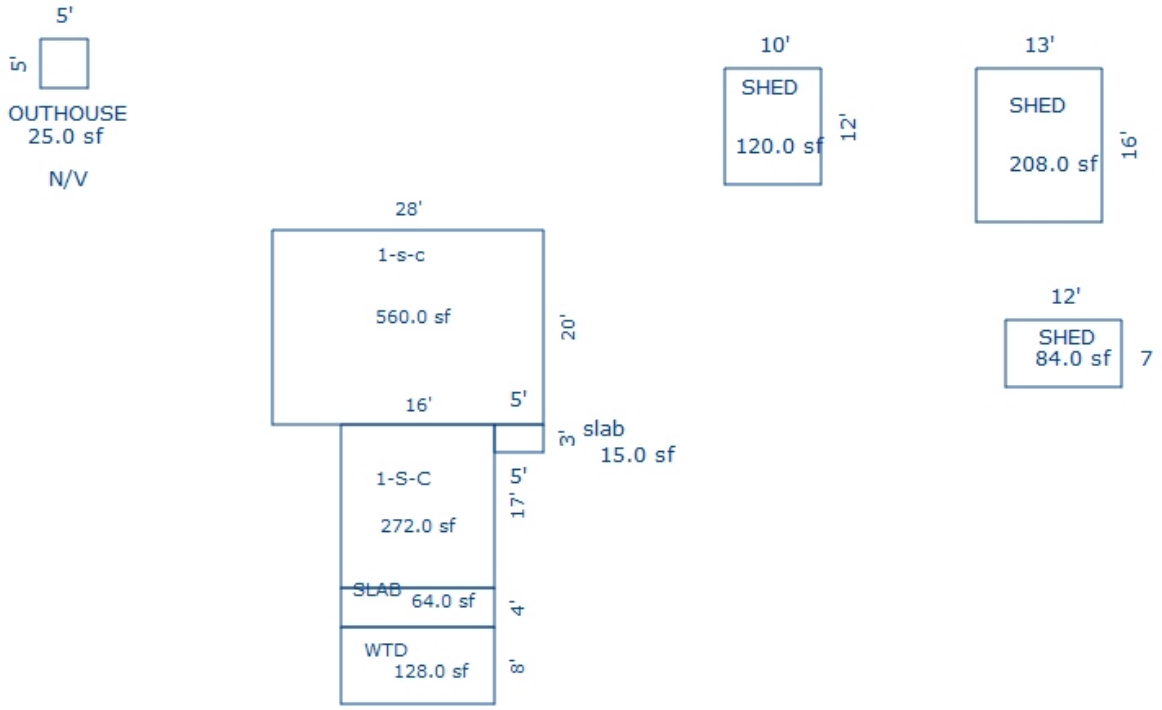

Sketch by Apex Sketch

*** Information herein deemed reliable but not guaranteed***

Parcel Number: 2410-24-3303 Jurisdiction: GREENWOOD TWP County: WEXFORD Printed on 02/15/2024

Grantor	Grantee	Sale Price	Sale Date	Inst. Type	Terms of Sale	Liber & Page	Verified By	Prcnt. Trans.
SPANGLER, GARRY L	SPANGLER, JOSEPH	0	12/05/2020	QC	09-FAMILY	689/304	AGENT	0.0
BOWDEN, ROBERT & KARYL	SPANGLER, GARRY	8,250	10/27/2000	WD	03-ARM'S LENGTH	377:25	DEED	0.0
DEBELLIS, TODD & SHANNON	BOWDEN, ROBERT & KARYL	4,900	10/20/2000	WD	08-ESTATE	377:23	DEED	0.0

Property Address

Owner's Name/Address

SPANGLER, JOSEPH
10348 NORTH CEDAR DR
GRAND HAVEN MI 49417

Tax Description

PAR "B" DESC AS BEG AT SW COR OF SEC: N 407.08 FT; E 642.47 FT; S 407.08 FT; W 642.04 FT TO POB. --6 A M/L-- GW. SEC. 24 T24N R10W -MANTON-

Comments/Influences

Class: RESIDENTIAL-VACANT Zoning:

School: MANTON CONSOLIDATED SCHOOLS

P.R.E. 0%

:

2024 Est TCV 26,634

Building Permit(s)	Date	Number	Status

	Improved	X	Vacant

	Public Improvements
	Dirt Road
X	Gravel Road
X	Paved Road
	Storm Sewer
	Sidewalk
	Water
	Sewer
X	Electric
	Gas
	Curb
	Street Lights
	Standard Utilities
	Underground Utils.

	Topography of Site
	Level
X	Rolling
X	Low
	High
	Landscaped
X	Swamp
X	Wooded
	Pond
	Waterfront
	Ravine
	Wetland
	Flood Plain
X	PINES

Who	When	What
GLA	05/30/2017	INSPECTION

Land Value Estimates for Land Table 4010.LAND VALUES

Description	Frontage	Depth	* Factors * Front	Depth	Rate	%Adj.	Reason	Value
ACREAGE			5.210 Acres		5,112	100		26,634
ROW			0.790 Acres		0	100		0
			6.00 Total Acres		Total Est. Land Value =			26,634

Year	Land Value	Building Value	Assessed Value	Board of Review	Tribunal/ Other	Taxable Value
2024	13,300	0	13,300			7,425C
2023	10,900	0	10,900			7,072C
2022	7,800	0	7,800			6,736C
2021	8,900	0	8,900			6,521C

The Equalizer. Copyright (c) 1999 - 2009.
Licensed To: Township of Greenwood, County of Wexford, Michigan

*** Information herein deemed reliable but not guaranteed***

Parcel Number: 2410-24-3401 Jurisdiction: GREENWOOD TWP County: WEXFORD Printed on 02/15/2024

Grantor	Grantee	Sale Price	Sale Date	Inst. Type	Terms of Sale	Liber & Page	Verified By	Prcnt. Trans.
GUTIERREZ, ERNEST	SCHAAP, DAVID	23,500	06/13/2022	WD	19-MULTI PARCEL ARM'S LEN	694/596	DEED	100.0
KUKUK, ROBERT & JOLENE	GUTIERREZ, ERNEST	0	05/23/2022	WD	16-LC PAYOFF	694/595	DEED	0.0
KUKUK, ROBERT L & JOLENE M	GUTIERREZ, ERNEST	15,000	07/05/2021	LC	20-MULTI PARCEL SALE REF	690/1768	DEED	100.0
DOUGLASS KURT R TRUST	KUKUK, ROBERT L & JOLENE M	20,000	04/19/2019	WD	08-ESTATE	6842/687	DEED	100.0

Property Address

Owner's Name/Address

SCHAAP, DAVID
7159 LAZY LN
LAKEVIEW MI 48850

Tax Description

PAR A-1; BEG AT S 1/4 COR OF SEC: W 264.15 FT; N 248.16 FT; E 264.15 FT; S 248.16 FT TO POB. --1.5 A M/L-- TOG W & SUB TO EASMT GW SEC 24 T24N R10W -MANTON- [[ASSESSED W/ 24-3101 '02

Comments/Influences

The Equalizer. Copyright (c) 1999 - 2009. Licensed To: Township of Greenwood, County of Wexford, Michigan

Class: RESIDENTIAL-VACANT Zoning:

School: MANTON CONSOLIDATED SCHOOLS

P.R.E. 0%

:

2024 Est TCV 14,239

Building Permit(s)	Date	Number	Status

	Improved	X	Vacant

	Public Improvements
X	Dirt Road
X	Gravel Road
	Paved Road
	Storm Sewer
	Sidewalk
	Water
	Sewer
X	Electric
	Gas
	Curb
	Street Lights
	Standard Utilities
	Underground Utils.

	Topography of Site
X	Level
X	Rolling
	Low
	High
	Landscaped
	Swamp
X	Wooded
	Pond
	Waterfront
	Ravine
	Wetland
	Flood Plain
X	PINES/OPEN

Who	When	What
GLA	10/31/2022	INSPECTION
GLA	05/30/2017	INSPECTION

Land Value Estimates for Land Table 4010.LAND VALUES

Description	Frontage	Depth	* Factors * Front	Depth	Rate	%Adj.	Reason	Value
ACREAGE			1.300 Acres		10,953	100		14,239
ROW			0.200 Acres		0	100		0
			1.50 Total Acres		Total Est. Land Value =			14,239

Year	Land Value	Building Value	Assessed Value	Board of Review	Tribunal/ Other	Taxable Value
2024	7,100	0	7,100			4,095C
2023	3,900	0	3,900			3,900S
2022	3,300	0	3,300			3,300S
2021	3,900	0	3,900			3,346C

*** Information herein deemed reliable but not guaranteed***

Parcel Number: 2410-24-3402 Jurisdiction: GREENWOOD TWP County: WEXFORD Printed on 02/15/2024

Grantor	Grantee	Sale Price	Sale Date	Inst. Type	Terms of Sale	Liber & Page	Verified By	Prcnt. Trans.
GUTIERREZ, ERNEST	SCHAAP, DAVID	23,500	06/13/2022	WD	20-MULTI PARCEL SALE REF	694/596	DEED	100.0
KUKUK, ROBERT & JOLENE	GUTIERREZ, ERNEST	0	05/23/2022	WD	16-LC PAYOFF	694/595	DEED	0.0
KUKUK, ROBERT L & JOLENE M	GUTIERREZ, ERNEST	15,000	07/05/2021	LC	03-ARM'S LENGTH	690/1768	DEED	0.0
KUKUK, ROBERT L & JOLENE M	GUTIERREZ, ERNEST	15,000	07/05/2021	LC	19-MULTI PARCEL ARM'S LEN	690/1768	DEED	100.0

Property Address

Owner's Name/Address

SCHAAP, DAVID
7159 LAZY LN
LAKEVIEW MI 48850

Tax Description

PAR A-2; COM AT S 1/4 COR OF SEC; N 248.16 FT TO POB: W 264.15 FT; N 165 FT; E 264.15 FT; S 165 FT TO POB. -1 A M/L- TOG W & SUB TO EASMT GW SEC 24 T24N R10W -MANTON- [[ASSESSED W/ 24-3101 '02

Comments/Influences

Default Comments

The Equalizer. Copyright (c) 1999 - 2009. Licensed To: Township of Greenwood, County of Wexford, Michigan

Class: RESIDENTIAL-VACANT Zoning:

School: MANTON CONSOLIDATED SCHOOLS

P.R.E. 0%

:

2024 Est TCV 9,639

Building Permit(s)	Date	Number	Status

	Improved	X	Vacant

	Public Improvements
X	Dirt Road
X	Gravel Road
	Paved Road
	Storm Sewer
	Sidewalk
	Water
	Sewer
X	Electric
	Gas
	Curb
	Street Lights
	Standard Utilities
	Underground Utils.

	Topography of Site
X	Level
X	Rolling
	Low
	High
	Landscaped
	Swamp
X	Wooded
	Pond
	Waterfront
	Ravine
	Wetland
	Flood Plain
X	PINES/OPEN

Who	When	What
GLA	10/31/2022	INSPECTION
GLA	05/30/2017	INSPECTION
LM	10/21/2010	INSPECTED

Land Value Estimates for Land Table 4010.LAND VALUES

Description	Frontage	Depth	* Factors * Front	Depth	Rate	%Adj.	Reason	Value
HELSEL RIV LOW	164.00	265.00	1.0000	0.0000	315	100*		0
ACREAGE			0.880 Acres		10,953	100		9,639
ROW			0.120 Acres		0	100		0

* denotes lines that do not contribute to the total acreage calculation.

164 Actual Front Feet, 1.00 Total Acres Total Est. Land Value = 9,639

Year	Land Value	Building Value	Assessed Value	Board of Review	Tribunal/ Other	Taxable Value
2024	4,800	0	4,800			2,730C
2023	2,600	0	2,600			2,600S
2022	2,200	0	2,200			2,200S
2021	2,600	0	2,600			2,230C

*** Information herein deemed reliable but not guaranteed***

Parcel Number: 2410-24-3403 Jurisdiction: GREENWOOD TWP County: WEXFORD Printed on 02/15/2024

Grantor	Grantee	Sale Price	Sale Date	Inst. Type	Terms of Sale	Liber & Page	Verified By	Prcnt. Trans.
GUTIERREZ, ERNEST	SCHAAP, DAVID	23,500	06/13/2022	WD	20-MULTI PARCEL SALE REF	694/596	DEED	100.0
KUKUK, ROBERT & JOLENE	GUTIERREZ, ERNEST	0	05/23/2022	WD	16-LC PAYOFF	694/595	DEED	0.0
KUKUK, ROBERT L & JOLENE M	GUTIERREZ, ERNEST	15,000	07/05/2021	LC	20-MULTI PARCEL SALE REF	690/1768	DEED	100.0
DOUGLASS KURT R TRUST	KUKUK, ROBERT L & JOLENE M	20,000	04/19/2019	WD	08-ESTATE	6842/687	DEED	100.0

Property Address

Owner's Name/Address

SCHAAP, DAVID
7159 LAZY LN
LAKEVIEW MI 48850

Tax Description

PAR A-3; COM AT S 1/4 COR OF SEC; N 413.16 FT TO POB: W 264.15 FT; N 165 FT; E 264.15 FT; S 165 FT TO POB. -1 A M/L TOG W & SUB TO EASMT GW SEC 24 T24N R10W -MANTON- [[ASSESSED W/ 24-3101 '02

Comments/Influences

The Equalizer. Copyright (c) 1999 - 2009. Licensed To: Township of Greenwood, County of Wexford, Michigan

Class: RESIDENTIAL-VACANT Zoning:

School: MANTON CONSOLIDATED SCHOOLS

P.R.E. 0%

:

2024 Est TCV 9,639

Building Permit(s)	Date	Number	Status

	Improved	X	Vacant

	Public Improvements
X	Dirt Road
	Gravel Road
	Paved Road
	Storm Sewer
	Sidewalk
	Water
	Sewer
X	Electric
	Gas
	Curb
	Street Lights
	Standard Utilities
	Underground Utils.

	Topography of Site
X	Level
X	Rolling
	Low
	High
	Landscaped
	Swamp
X	Wooded
	Pond
	Waterfront
	Ravine
	Wetland
	Flood Plain
X	PINES/OPEN

Who	When	What
GLA	10/31/2022	INSPECTION
GLA	05/30/2017	INSPECTION

Land Value Estimates for Land Table 4010.LAND VALUES

Description	Frontage	Depth	* Factors * Front	Depth	Rate	%Adj.	Reason	Value
ACREAGE			0.880 Acres		10,953	100		9,639
ROW			0.120 Acres		0	100		0
			1.00 Total Acres		Total Est. Land Value =			9,639

Year	Land Value	Building Value	Assessed Value	Board of Review	Tribunal/ Other	Taxable Value
2024	4,800	0	4,800			2,730C
2023	2,600	0	2,600			2,600S
2022	2,200	0	2,200			2,200S
2021	2,600	0	2,600			2,230C

*** Information herein deemed reliable but not guaranteed***

Parcel Number: 2410-24-3404-01 Jurisdiction: GREENWOOD TWP County: WEXFORD Printed on 02/15/2024

Grantor	Grantee	Sale Price	Sale Date	Inst. Type	Terms of Sale	Liber & Page	Verified By	Prcnt. Trans.
CLIFFORD, MARK ALAN	LITTLE, KELLIE L	100	04/20/2022	QC	20-MULTI PARCEL SALE REF	692/2597	DEED	100.0
DELFAM LLC	CLIFFORD, MARK ALAN	90,000	04/19/2022	WD	19-MULTI PARCEL ARM'S LEN	692/2596	DEED	100.0

Property Address

BUTTERMILK LN

Owner's Name/Address

LITTLE, KELLIE L
8333 BUTERMILK LN
MANTON MI 49663

Tax Description

COM AT S 1/4 COR OF SEC; N 908.16 FT TO POB: W 264.15 FT; N 411..5 FT; E 264.18 FT; S 411.5 FT TO POB. 2.5 A M/L-- TOG W & SUB TO EASMT GW SEC 24 T24N R10W -MANTON-
SPLIT/ ON 01/05/2022 FROM 2410-24-3404;

Comments/Influences

Split/Comb. on 01/05/2022 completed 01/05/2022 LINDA ;
Parent Parcel(s): 2410-24-3404;
Child Parcel(s): 2410-24-3404-01, 2410-24-3404-02;

Class: RESIDENTIAL-VACANT Zoning:
School: MANTON CONSOLIDATED SCHOOLS
P.R.E. 100% 09/15/2022
:
2024 Est TCV 13,865

Building Permit(s)	Date	Number	Status

Improved | X | Vacant

Public Improvements

Dirt Road
Gravel Road
Paved Road
Storm Sewer
Sidewalk
Water
Sewer
Electric
Gas
Curb
Street Lights
Standard Utilities
Underground Utils.

Topography of Site

Level
Rolling
Low
High
Landscaped
Swamp
Wooded
Pond
Waterfront
Ravine
Wetland
Flood Plain

Who When What
GLA 10/31/2022 INSPECTION

Land Value Estimates for Land Table 4010.LAND VALUES

Description	Frontage	Depth	* Factors * Front	Depth	Rate	%Adj.	Reason	Value
ACREAGE			2.500 Acres		5,546	100		13,865
			2.50 Total Acres		Total Est. Land Value =			13,865

Year	Land Value	Building Value	Assessed Value	Board of Review	Tribunal/ Other	Taxable Value
2024	6,900	0	6,900			6,900S
2023	6,900	0	6,900			6,900S
2022	5,600	0	5,600			3,471C
2021	0	0	0			0

The Equalizer. Copyright (c) 1999 - 2009. Licensed To: Township of Greenwood, County of Wexford, Michigan

*** Information herein deemed reliable but not guaranteed***

Parcel Number: 2410-24-3404-02 Jurisdiction: GREENWOOD TWP County: WEXFORD Printed on 02/15/2024

Grantor	Grantee	Sale Price	Sale Date	Inst. Type	Terms of Sale	Liber & Page	Verified By	Prcnt. Trans.
CLIFFORD, MARK ALAN	LITTLE, KELLIE L	100	04/20/2022	QC	20-MULTI PARCEL SALE REF	692/2597	DEED	100.0
DELFAM LLC	CLIFFORD, MARK ALAN	90,000	04/19/2022	WD	20-MULTI PARCEL SALE REF	692/2596	DEED	100.0

Property Address

Owner's Name/Address

LITTLE, KELLIE L
8333 BUTTERMILK LN
MANTON MI 49663

Tax Description

COM AT S 1/4 COR OF SEC; N 578.16 FT TO POB: W 264.15 FT; N 330 FT; E 264.18 FT; S 330 POB. 2. A M/L-- TOG W & SUB TO EASMT GW SEC 24 T24N R10W -MANTON-SPLIT/COMBINED ON 01/05/2022 FROM 2410-24-3404;

Comments/Influences

Split/Comb. on 01/05/2022 completed 01/05/2022 LINDA ;
Parent Parcel(s): 2410-24-3404;
Child Parcel(s): 2410-24-3404-01, 2410-24-3404-02;

Class: RESIDENTIAL-VACANT Zoning:
School: MANTON CONSOLIDATED SCHOOLS
P.R.E. 100% 02/07/2023
:
2024 Est TCV 11,092

Building Permit(s)	Date	Number	Status

Improved | X | Vacant

Public Improvements

Dirt Road
Gravel Road
Paved Road
Storm Sewer
Sidewalk
Water
Sewer
Electric
Gas
Curb
Street Lights
Standard Utilities
Underground Utils.

Topography of Site

Level
Rolling
Low
High
Landscaped
Swamp
Wooded
Pond
Waterfront
Ravine
Wetland
Flood Plain

Who When What
GLA 10/31/2022 INSPECTION

Land Value Estimates for Land Table 4010.LAND VALUES

Description	Frontage	Depth	* Factors * Front	Depth	Rate	%Adj.	Reason	Value
ACREAGE			2.000 Acres		5,546	100		11,092
			2.00 Total Acres		Total Est. Land Value =			11,092

Year	Land Value	Building Value	Assessed Value	Board of Review	Tribunal/ Other	Taxable Value
2024	5,500	0	5,500			5,500S
2023	5,500	0	5,500			5,500S
2022	4,500	0	4,500			2,812C
2021	0	0	0			0

The Equalizer. Copyright (c) 1999 - 2009. Licensed To: Township of Greenwood, County of Wexford, Michigan

*** Information herein deemed reliable but not guaranteed***

Parcel Number: 2410-24-4101 Jurisdiction: GREENWOOD TWP County: WEXFORD Printed on 02/15/2024

Grantor	Grantee	Sale Price	Sale Date	Inst. Type	Terms of Sale	Liber & Page	Verified By	Prcnt. Trans.
COFFELL, ROBERT A.	BETTS, STEVEN J	78,000	10/11/2012	WD	03-ARM'S LENGTH	652/1193	DEED	100.0
COFFELL, LEONA M	COFFELL, ROBERT A.	0	04/14/2008	WD	09-FAMILY	612/1184	DEED	0.0
BAINBRIDGE, DALE N.	COFFELL, ROBERT A.	15,000	04/29/1994	LC	03-ARM'S LENGTH	339:151	DEED	0.0

Property Address

8439 N 37 RD

Owner's Name/Address

BETTS, STEVEN J
8439 N 37 RD
MANTON MI 49663

Tax Description

N 1/2 OF NE 1/4 OF SE 1/4 20 A. GW. SEC. 24 T24N R10W -MANTON-

Comments/Influences

Class: RESIDENTIAL-IMPROV Zoning:

School: MANTON CONSOLIDATED SCHOOLS

P.R.E. 100% 10/12/2012

:

2024 Est TCV 122,798 TCV/TFA: 75.80

Building Permit(s)	Date	Number	Status
RESIDENTIAL - NEW	05/20/2005	PB12745	
RESIDENTIAL - REMODEL	01/08/2003	PM6504	
MOBILE HOME	01/07/2003	PM6503	
MOBILE HOME	01/07/2003	PP2895	

X Improved | Vacant

Public Improvements

- Dirt Road
- X Gravel Road
- Paved Road
- Storm Sewer
- Sidewalk
- Water
- Sewer
- X Electric
- Gas
- Curb
- Street Lights
- Standard Utilities
- Underground Utils.

Topography of Site

- X Level
- X Rolling
- Low
- High
- Landscaped
- Swamp
- X Wooded
- Pond
- Waterfront
- Ravine
- Wetland
- Flood Plain
- X PINES/OPEN

Who	When	What
GLA	05/30/2017	INSPECTION

Land Value Estimates for Land Table 4010.LAND VALUES

Description	Frontage	Depth	* Factors * Front	Depth	Rate	%Adj.	Reason	Value
ACREAGE			19.490 Acres		3,200	70	SWAMP	43,658
ROW			0.510 Acres		0	100		0
			20.00 Total Acres		Total Est. Land Value =			43,658

Land Improvement Cost Estimates

Description	Rate	Size	% Good	Cash Value
D/W/P: 4in Concrete	6.53	123	40	321
Wood Frame	20.60	360	10	742
Total Estimated Land Improvements True Cash Value =				1,063

The Equalizer. Copyright (c) 1999 - 2009.
Licensed To: Township of Greenwood, County of Wexford, Michigan

Year	Land Value	Building Value	Assessed Value	Board of Review	Tribunal/ Other	Taxable Value
2024	21,800	39,600	61,400			38,713C
2023	17,700	32,000	49,700			36,870C
2022	15,100	26,600	41,700			35,115C
2021	13,900	23,700	37,600			33,994C

*** Information herein deemed reliable but not guaranteed***

Building Type

	Single Family
X	Mobile Home
	Town Home
	Duplex
	A-Frame

X	Wood Frame

Building Style: SWT/DWT

Yr Built	Remodeled
2002	2050

Condition: Fair

Room List

	Basement
	1st Floor
	2nd Floor
	Bedrooms

(1) Exterior

	Wood/Shingle
	Aluminum/Vinyl
	Brick
X	Vinyl
	Insulation

(2) Windows

X	Many		Large
	Avg.	X	Avg.
	Few		Small

	Wood Sash
	Metal Sash
X	Vinyl Sash
X	Double Hung
	Horiz. Slide
	Casement
	Double Glass
	Patio Doors
X	Storms & Screens

(3) Roof

X	Gable		Gambrel
	Hip		Mansard
	Flat		Shed

	Asphalt Shingle
X	Metal

Chimney: Metal

(3) Roof (cont.)

	Eavestrough
	Insulation
0	Front Overhang
0	Other Overhang

(4) Interior

	Drywall		Plaster
	Paneled		Wood T&G

Trim & Decoration

	Ex		Ord		Min

Size of Closets

	Lg		Ord		Small

Doors:		Solid		H.C.	

(5) Floors

Kitchen:
Other:
Other:

(6) Ceilings

(7) Excavation

Basement: 0 S.F.
Crawl: 0 S.F.
Slab: 0 S.F.
Height to Joists: 0.0

(8) Basement

	Conc. Block
	Poured Conc.
	Stone
	Treated Wood
	Concrete Floor

(9) Basement Finish

	Recreation SF
	Living SF
	Walkout Doors (B)
	No Floor SF
	Walkout Doors (A)

(10) Floor Support

Joists:
Unsupported Len:
Cntr.Sup:

(11) Heating/Cooling

X	Gas		Oil		Elec.
	Wood		Coal		Steam

X	Forced Warm Air
	Wall Furnace
	Warm & Cool Air
	Heat Pump

	Central Air
	Wood Furnace

(12) Electric

0	Amps Service

No./Qual. of Fixtures

	Ex.		Ord.		Min

No. of Elec. Outlets

	Many		Ave.		Few

(13) Plumbing

1	Average Fixture(s)
	3 Fixture Bath
	2 Fixture Bath
	Softener, Auto
	Softener, Manual
	Solar Water Heat
	No Plumbing
	Extra Toilet
	Extra Sink
	Separate Shower
	Ceramic Tile Floor
	Ceramic Tile Wains
	Ceramic Tub Alcove
	Vent Fan

(14) Water/Sewer

	Public Water
	Public Sewer
1	Water Well
1	1000 Gal Septic
	2000 Gal Septic

Lump Sum Items:

(15) Built-ins

	Appliance Allow.
	Cook Top
	Dishwasher
	Garbage Disposal
	Bath Heater
	Vent Fan
	Hot Tub
	Unvented Hood
	Vented Hood
	Intercom
	Jacuzzi Tub
	Jacuzzi repl.Tub
	Oven
	Microwave
	Standard Range
	Self Clean Range
	Sauna
	Trash Compactor
	Central Vacuum
	Security System

(15) Fireplaces

	Interior 1 Story
	Interior 2 Story
	2nd/Same Stack
	Two Sided
	Exterior 1 Story
	Exterior 2 Story
	Prefab 1 Story
	Prefab 2 Story
	Heat Circulator
	Raised Hearth
	Wood Stove
	Direct-Vented Gas

Class: Fair
Effec. Age: 20
Floor Area:
Total Base New : 130,867 E.C.F.
Total Depr Cost: 60,198 X 1.297
Estimated T.C.V: 78,077

(16) Porches/Decks

Area	Type
151	Treated Wood
12	Treated Wood

(17) Garage

Year Built: 2005
Car Capacity:
Class: CD
Exterior: Pole
Brick Ven.: 0
Stone Ven.: 0
Common Wall: Detache
Foundation: 18 Inch
Finished ?:
Auto. Doors: 0
Mech. Doors: 0
Area: 816
% Good: 0
Storage Area: 0
No Conc. Floor: 0

Bsmnt Garage:

Carport Area:
Roof:

Cost Est. for Res. Bldg: 1 Mobile Home SWT/DWT Cls Fair Blt 2002
(11) Heating System: Forced Warm Air
Ground Area = 1620 SF Floor Area = 1620 SF.
Phy/Ab.Phy/Func/Econ/Comb. % Good=46/100/100/100/46
Building Areas

Type	Ext. Walls	Roof/Fnd.	Size	Cost New	Depr. Cost
Main Home	Siding	Comp.Shingle	1620		
			Total:	87,749	40,364
Other Additions/Adjustments					
42" frost-free footings, foundation			174	9,711	4,467
Water/Sewer					
1000 Gal Septic			1	4,582	2,108
Water Well, 100 Feet			1	5,680	2,613
Deck					
Treated Wood			151	3,388	1,558
Treated Wood			12	540	248
Garages					
Class: CD Exterior: Pole (Unfinished)					
Base Cost			816	19,217	8,840
			Totals:	130,867	60,198

Notes: NTA1175099
ECF (RESIDENTIAL) 1.297 => TCV: 78,077

*** Information herein deemed reliable but not guaranteed***

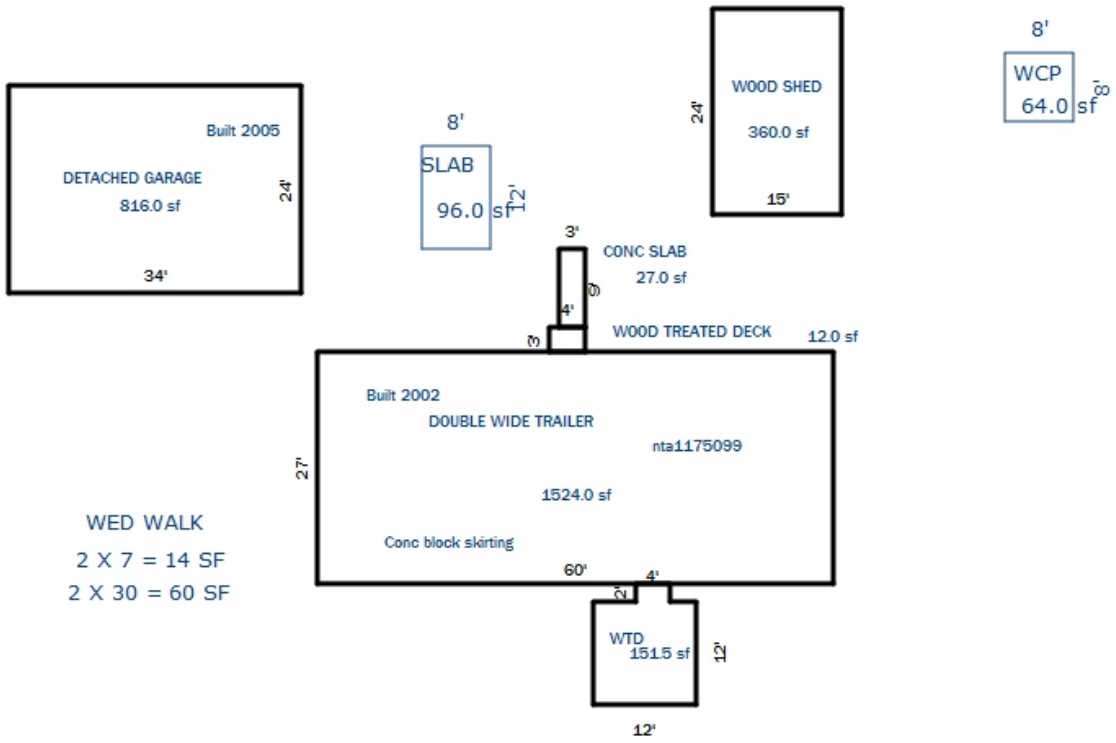

Sketch by Apex Sketch

*** Information herein deemed reliable but not guaranteed***

Parcel Number: 2410-24-4102 Jurisdiction: GREENWOOD TWP County: WEXFORD Printed on 02/15/2024

Grantor	Grantee	Sale Price	Sale Date	Inst. Type	Terms of Sale	Liber & Page	Verified By	Prcnt. Trans.
DOUGLASS, MATTHEW	WEBB, LAWRENCE & JOYCE	175,000	10/17/2005	WD	03-ARM'S LENGTH	579:1207	DEED	0.0
MARTZ, GARY & LORAINE	DOUGLASS, MATTHEW	44,000	05/24/2000	WD	03-ARM'S LENGTH	374:107	DEED	0.0

Property Address
8271 N 37 RD

Owner's Name/Address
WEBB, LAWRENCE C
& JOYCE L
16731 MAYFIELD
LIVONIA MI 48154

Tax Description
PAR A; THAT PART OF S 1/2 OF NE 1/4 OF SE 1/4 LYING E OF C/L OF BUTTERMILK CREEK. --11.37 A M/L-- GW. SEC. 24 T24N R10W -MANTON-

Comments/Influences

The Equalizer. Copyright (c) 1999 - 2009. Licensed To: Township of Greenwood, County of Wexford, Michigan

Class: RESIDENTIAL-IMPROV Zoning:
School: MANTON CONSOLIDATED SCHOOLS
P.R.E. 0%
:
2024 Est TCV 208,995 TCV/TFA: 267.60

Building Permit(s)	Date	Number	Status
RESIDENTIAL - NEW	05/31/2005	PB12762	
RESIDENTIAL - REMODEL	09/24/2003	PB11866	
RESIDENTIAL - NEW	12/18/2002	PM6464	
RESIDENTIAL - REMODEL	11/14/2002	PM6372	

X Improved | Vacant

	Public Improvements
	Dirt Road
X	Gravel Road
	Paved Road
	Storm Sewer
	Sidewalk
	Water
	Sewer
X	Electric
	Gas
	Curb
	Street Lights
	Standard Utilities
	Underground Utils.

	Topography of Site
X	Level
X	Rolling
	Low
	High
	Landscaped
	Swamp
X	Wooded
	Pond
	Waterfront
	Ravine
	Wetland
	Flood Plain
X	PINES/OPEN

Who	When	What
GLA	05/30/2017	INSPECTION

Land Value Estimates for Land Table 4010.LAND VALUES

Description	Frontage	Depth	* Factors * Front	Depth	Rate	%Adj.	Reason	Value
ACREAGE			10.870 Acres		4,290	100		46,637
ROW			0.500 Acres		0	100		0
			11.37 Total Acres		Total Est. Land Value =			46,637

Land Improvement Cost Estimates

Description	Rate	Size	% Good	Cash Value
D/W/P: 4in Concrete	7.01	324	45	1,022
Total Estimated Land Improvements True Cash Value =				1,022

Year	Land Value	Building Value	Assessed Value	Board of Review	Tribunal/ Other	Taxable Value
2024	23,300	81,200	104,500			64,772C
2023	14,100	66,300	80,400			61,688C
2022	12,900	56,000	68,900			58,751C
2021	13,000	56,600	69,600			56,875C

*** Information herein deemed reliable but not guaranteed***

Building Type

X	Single Family
	Mobile Home
	Town Home
	Duplex
	A-Frame
X	Wood Frame

Building Style: PLAIN

Yr Built	Remodeled
0	0

Condition: Good

Room List

	Basement
	1st Floor
	2nd Floor
	Bedrooms

(1) Exterior

	Wood/Shingle
X	Aluminum/Vinyl
	Brick
X	Insulation

(2) Windows

X	Many		Large
	Avg.	X	Avg.
	Few		Small

	Wood Sash
	Metal Sash
X	Vinyl Sash
	Double Hung
	Horiz. Slide
	Casement
	Double Glass
	Patio Doors
X	Storms & Screens

(3) Roof

X	Gable		Gambrel
	Hip		Mansard
	Flat		Shed
X	Asphalt Shingle		

Chimney:

(3) Roof (cont.)

	Eavestrough
X	Insulation
0	Front Overhang
0	Other Overhang

(4) Interior

X	Drywall		Plaster
	Paneled		Wood T&G

Trim & Decoration

	Ex	X	Ord		Min

Size of Closets

	Lg	X	Ord		Small

Doors:		Solid	X	H.C.	

(5) Floors

Kitchen:
Other: Linoleum
Other: Carpeted

(6) Ceilings

X	Drywall

(7) Excavation

Basement: 625 S.F.
Crawl: 0 S.F.
Slab: 0 S.F.
Height to Joists: 0.0

(8) Basement

	Conc. Block
	Poured Conc.
	Stone
	Treated Wood
	Concrete Floor

(9) Basement Finish

	Recreation SF
	Living SF
	Walkout Doors (B)
	No Floor SF
	Walkout Doors (A)

(10) Floor Support

Joists:
Unsupported Len:
Cntr.Sup:

(11) Heating/Cooling

X	Gas		Oil		Elec.
	Wood		Coal		Steam

	Forced Air w/o Ducts
X	Forced Air w/ Ducts
	Forced Hot Water
	Electric Baseboard
	Elec. Ceil. Radiant
	Radiant (in-floor)
	Electric Wall Heat
	Space Heater
	Wall/Floor Furnace
	Forced Heat & Cool
	Heat Pump
	No Heating/Cooling

	Central Air
	Wood Furnace

(12) Electric

150	Amps Service

No./Qual. of Fixtures

	Ex.	X	Ord.		Min

No. of Elec. Outlets

	Many	X	Ave.		Few

(13) Plumbing

	Average Fixture(s)
1	3 Fixture Bath
	2 Fixture Bath
	Softener, Auto
	Softener, Manual
	Solar Water Heat
	No Plumbing
	Extra Toilet
	Extra Sink
	Separate Shower
	Ceramic Tile Floor
	Ceramic Tile Wains
	Ceramic Tub Alcove
	Vent Fan

(14) Water/Sewer

	Public Water
	Public Sewer
1	Water Well
1	1000 Gal Septic
	2000 Gal Septic

Lump Sum Items:

(15) Built-ins

	Appliance Allow.
	Cook Top
	Dishwasher
	Garbage Disposal
	Bath Heater
	Vent Fan
	Hot Tub
	Unvented Hood
	Vented Hood
	Intercom
	Jacuzzi Tub
	Jacuzzi repl.Tub
	Oven
	Microwave
	Standard Range
	Self Clean Range
	Sauna
	Trash Compactor
	Central Vacuum
	Security System

(15) Fireplaces

	Interior 1 Story
	Interior 2 Story
	2nd/Same Stack
	Two Sided
	Exterior 1 Story
1	Exterior 2 Story
	Prefab 1 Story
	Prefab 2 Story
	Heat Circulator
	Raised Hearth
	Wood Stove
	Direct-Vented Gas

Class: CD
Effec. Age: 20
Floor Area: 781
Total Base New : 155,491 E.C.F.
Total Depr Cost: 124,392 X 1.297
Estimated T.C.V: 161,336

(16) Porches/Decks

Area	Type
341	WCP (1 Story)
236	Treated Wood

(17) Garage

Year Built:
Car Capacity:
Class: CD
Exterior: Pole
Brick Ven.: 0
Stone Ven.: 0
Common Wall: Detache
Foundation: 18 Inch
Finished ?:
Auto. Doors: 0
Mech. Doors: 0
Area: 384
% Good: 0
Storage Area: 0
No Conc. Floor: 0

Bsmnt Garage:

Carport Area:
Roof:

Cost Est. for Res. Bldg: 1 Single Family PLAIN Cls CD Blt 0
(11) Heating System: Forced Air w/ Ducts
Ground Area = 625 SF Floor Area = 781 SF.
Phy/Ab.Phy/Func/Econ/Comb. % Good=80/100/100/100/80
Building Areas

Stories	Exterior	Foundation	Size	Cost New	Depr. Cost
1.25 Story	Siding	Basement	625		
			Total:	103,013	82,410
Other Additions/Adjustments					
Water/Sewer					
1000 Gal Septic			1	4,582	3,666
Water Well, 100 Feet			1	5,680	4,544
Porches					
WCP (1 Story)			341	10,036	8,029
Deck					
Treated Wood			236	4,548	3,638
Garages					
Class: CD Exterior: Pole (Unfinished)					
Base Cost			384	11,324	9,059
Class: CD Exterior: Pole (Unfinished)					
Base Cost			216	7,318	5,854
Fireplaces					
Exterior 2 Story			1	7,100	5,680
Local Cost Items					
POLE LEAN TO			360	1,890	1,512
			Totals:	155,491	124,392

Notes:

ECF (RESIDENTIAL) 1.297 => TCV: 161,336

*** Information herein deemed reliable but not guaranteed***

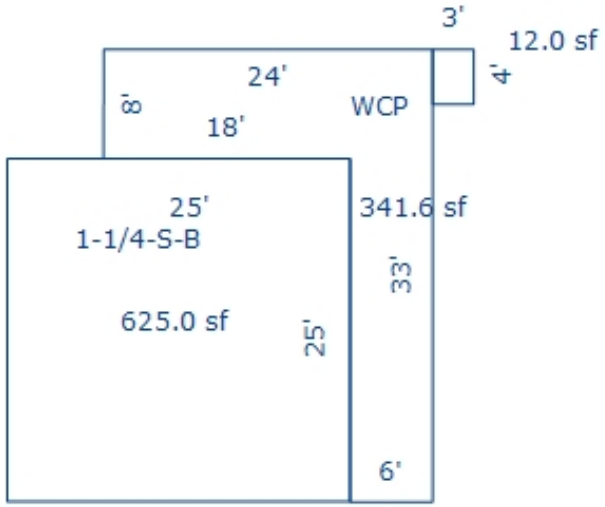

SLAB UNDER WCP

20 X 5 = 100 SF

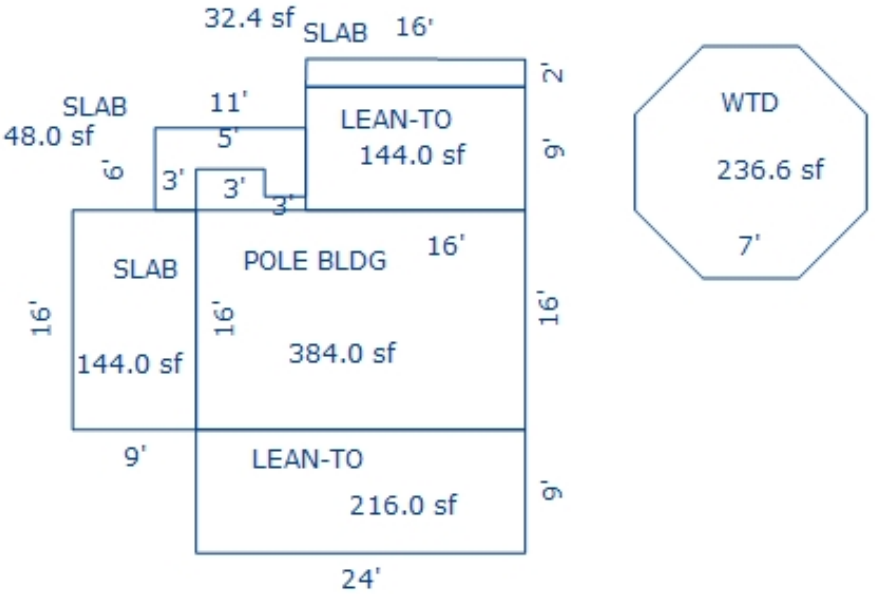

*** Information herein deemed reliable but not guaranteed***

Parcel Number: 2410-24-4103 Jurisdiction: GREENWOOD TWP County: WEXFORD Printed on 02/15/2024

Grantor	Grantee	Sale Price	Sale Date	Inst. Type	Terms of Sale	Liber & Page	Verified By	Prcnt. Trans.
DOUGLASS, MATTHEW S	MORGAN SHAUN W & SARAH A	265,000	04/12/2017	WD	03-ARM'S LENGTH	680/265	DEED	100.0

Property Address

8226 BUTTERMILK LN

Owner's Name/Address

MORGAN SHAUN W & SARAH A
8226 BUTTERMILK LN
MANTON MI 49663

Tax Description

COM AT S 1/4 COR OF SEC; N 1320.42 FT; E 973 FT TO POB: E 310.22 FT; CONT E 596.62 FT; NL'Y ALG C/L BUTTERMILK CREEK TO N LN OF S 1/2 OF NE 1/4 OF SE 1/4; W 432.15 FT; S 240.7 FT; W 310.22 FT; S 421.26 FT TO POB. -11.14 A M/L- TOG W & SUB TO EASMT. GW SEC 24 T24N R10W -MANTON- [[ASSESSED W/ 24-3101 '02 [[ASSESSED W/ 24-4102 '05 SPLIT ON 02/03/2009 FROM 2410-24-4201, 2410-24-3108;

Comments/Influences

The Equalizer. Copyright (c) 1999 - 2009. Licensed To: Township of Greenwood, County of Wexford, Michigan

Class: RESIDENTIAL-IMPROV Zoning:

School: MANTON CONSOLIDATED SCHOOLS

P.R.E. 100% 04/28/2017

:

2024 Est TCV 331,798 TCV/TFA: 225.41

Building Permit(s)	Date	Number	Status

X Improved | Vacant

	Public Improvements
X	Dirt Road
	Gravel Road
	Paved Road
	Storm Sewer
	Sidewalk
	Water
	Sewer
X	Electric
	Gas
	Curb
	Street Lights
	Standard Utilities
	Underground Utils.

	Topography of Site
	Level
X	Rolling
	Low
	High
	Landscaped
	Swamp
X	Wooded
	Pond
	Waterfront
	Ravine
	Wetland
	Flood Plain
X	PINES/OPEN

Who	When	What
GLA	05/30/2017	INSPECTION

Land Value Estimates for Land Table 4010.LAND VALUES

Description	Frontage	Depth	* Factors * Front	Depth	Rate	%Adj.	Reason	Value
ACREAGE			11.140 Acres		4,194	100		46,726
			11.14 Total Acres		Total Est. Land Value =			46,726

Land Improvement Cost Estimates

Description	Rate	Size	% Good	Cash Value
D/W/P: 4in Concrete	7.01	852	45	2,688
Total Estimated Land Improvements True Cash Value =				2,688

Year	Land Value	Building Value	Assessed Value	Board of Review	Tribunal/ Other	Taxable Value
2024	23,400	142,500	165,900			110,496C
2023	14,500	116,300	130,800			105,235C
2022	13,200	98,200	111,400			100,224C
2021	13,400	99,200	112,600			97,023C

*** Information herein deemed reliable but not guaranteed***

Building Type

X	Single Family
	Mobile Home
	Town Home
	Duplex
	A-Frame
X	Wood Frame

Building Style: PLAIN

Yr Built	Remodeled
2005	0

Condition: Good

Room List

	Basement
	1st Floor
	2nd Floor
	Bedrooms

(1) Exterior

X	Wood/Shingle
	Aluminum/Vinyl
	Brick
X	Insulation

(2) Windows

	Many		Large
	Avg.	X	Avg.
	Few		Small

	Wood Sash
	Metal Sash
X	Vinyl Sash
	Double Hung
	Horiz. Slide
	Casement
	Double Glass
	Patio Doors
X	Storms & Screens

(3) Roof

X	Gable		Gambrel
	Hip		Mansard
	Flat		Shed

X	Asphalt Shingle

Chimney:

(3) Roof (cont.)

	Eavestrough
X	Insulation
0	Front Overhang
0	Other Overhang

(4) Interior

X	Drywall		Plaster
	Paneled		Wood T&G

Trim & Decoration

	Ex	X	Ord		Min

Size of Closets

	Lg	X	Ord		Small

Doors:		Solid	X	H.C.	

(5) Floors

Kitchen:
Other: Linoleum
Other: Carpeted

(6) Ceilings

X	Drywall

(7) Excavation

Basement: 832 S.F.
Crawl: 0 S.F.
Slab: 0 S.F.
Height to Joists: 0.0

(8) Basement

	Conc. Block
	Poured Conc.
	Stone
	Treated Wood
	Concrete Floor

(9) Basement Finish

	Recreation SF
	Living SF
	Walkout Doors (B)
	No Floor SF
	Walkout Doors (A)

(10) Floor Support

Joists:
Unsupported Len:
Cntr.Sup:

(11) Heating/Cooling

X	Gas		Oil		Elec.
	Wood		Coal		Steam

	Forced Air w/o Ducts
X	Forced Air w/ Ducts
	Forced Hot Water
	Electric Baseboard
	Elec. Ceil. Radiant
	Radiant (in-floor)
	Electric Wall Heat
	Space Heater
	Wall/Floor Furnace
	Forced Heat & Cool
	Heat Pump
	No Heating/Cooling

	Central Air
	Wood Furnace

(12) Electric

200	Amps Service

No./Qual. of Fixtures

	Ex.	X	Ord.		Min

No. of Elec. Outlets

	Many	X	Ave.		Few

(13) Plumbing

2	Average Fixture(s)
	3 Fixture Bath
	2 Fixture Bath
	Softener, Auto
	Softener, Manual
	Solar Water Heat
	No Plumbing
	Extra Toilet
	Extra Sink
	Separate Shower
	Ceramic Tile Floor
	Ceramic Tile Wains
	Ceramic Tub Alcove
	Vent Fan

(14) Water/Sewer

	Public Water
	Public Sewer
1	Water Well
1	1000 Gal Septic
	2000 Gal Septic

Lump Sum Items:

(15) Built-ins

	Appliance Allow.
	Cook Top
	Dishwasher
	Garbage Disposal
	Bath Heater
	Vent Fan
	Hot Tub
	Unvented Hood
	Vented Hood
	Intercom
	Jacuzzi Tub
	Jacuzzi repl.Tub
	Oven
	Microwave
	Standard Range
	Self Clean Range
	Sauna
	Trash Compactor
	Central Vacuum
	Security System

(15) Fireplaces

	Interior 1 Story
	Interior 2 Story
	2nd/Same Stack
	Two Sided
	Exterior 1 Story
1	Exterior 2 Story
	Prefab 1 Story
	Prefab 2 Story
	Heat Circulator
	Raised Hearth
	Wood Stove
	Direct-Vented Gas

Class: C
Effec. Age: 19
Floor Area: 1,472
Total Base New : 268,790 E.C.F.
Total Depr Cost: 217,721 X 1.297
Estimated T.C.V: 282,384

(16) Porches/Decks

Area	Type
64	WGEP (1 Story)
128	WCP (1 Story)
280	Brzwy, FW

(17) Garage

Year Built:
Car Capacity:
Class: C
Exterior: Siding
Brick Ven.: 0
Stone Ven.: 0
Common Wall: 2 Wall
Foundation: 42 Inch
Finished ?:
Auto. Doors: 0
Mech. Doors: 0
Area: 624
% Good: 0
Storage Area: 0
No Conc. Floor: 0

Bsmnt Garage:

Carport Area:
Roof:

Cost Est. for Res. Bldg: 1 Single Family PLAIN Cls C Blt 2005
(11) Heating System: Forced Air w/ Ducts
Ground Area = 832 SF Floor Area = 1472 SF.
Phy/Ab.Phy/Func/Econ/Comb. % Good=81/100/100/100/81
Building Areas

Stories	Exterior	Foundation	Size	Cost New	Depr. Cost
2 Story	Siding	Basement	640		
1 Story	Siding	Basement	192		
		Total:		190,638	154,417
Other Additions/Adjustments					
Plumbing					
3 Fixture Bath			1	4,678	3,789
Water/Sewer					
1000 Gal Septic			1	4,899	3,968
Water Well, 100 Feet			1	5,849	4,738
Porches					
WGEP (1 Story)			64	7,220	5,848
WCP (1 Story)			128	5,856	4,743
Garages					
Class: C Exterior: Siding Foundation: 42 Inch (Unfinished)					
Base Cost			624	26,401	21,385
Common Wall: 2 Wall			1	-5,409	-4,381
Fireplaces					
Exterior 2 Story			1	8,080	6,545
Breezeways					
Frame Wall			280	19,407	15,720
Local Cost Items					
WOOD LEAN TO			192	1,171	949
		Totals:		268,790	217,721

Notes:
ECF (RESIDENTIAL) 1.297 => TCV: 282,384

*** Information herein deemed reliable but not guaranteed***

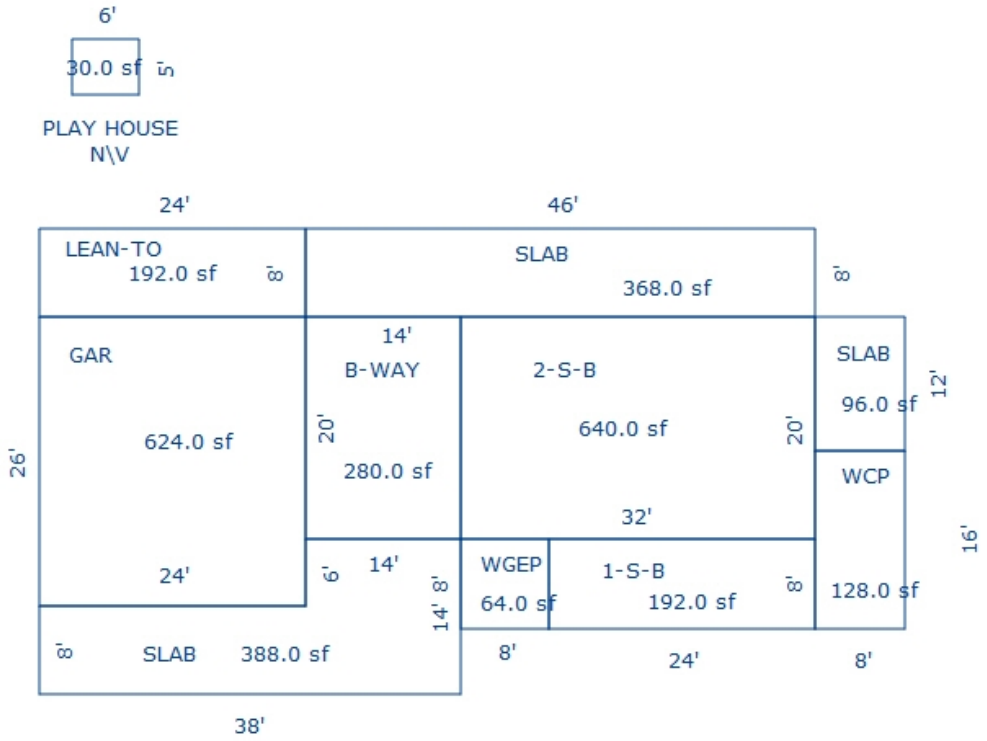

Sketch by Apex Sketch

*** Information herein deemed reliable but not guaranteed***

Parcel Number: 2410-24-4201-01 Jurisdiction: GREENWOOD TWP County: WEXFORD Printed on 02/15/2024

Grantor	Grantee	Sale Price	Sale Date	Inst. Type	Terms of Sale	Liber & Page	Verified By	Prcnt. Trans.
PARKER, BRYCE	PARKER, STEVE	1	09/27/2021	QC	09-FAMILY	691/562	DEED	0.0
DOUGLASS, MATTHEW S	PARKER, BRYCE	65,000	12/04/2020	WD	03-ARM'S LENGTH	688/2409	AGENT	100.0

Property Address

8226 BUTTERMILK LN

Owner's Name/Address

PARKER, STEVE
1504 YOUNG ST
OWOSSO MI 48867

Class: RESIDENTIAL-VACANT Zoning:

School: MANTON CONSOLIDATED SCHOOLS

P.R.E. 0%

:

2024 Est TCV 142,577 TCV/TFA: 360.04

Building Permit(s)	Date	Number	Status
Res. Single Family	05/19/2021	PB21-066	ENTERED
RESIDENTIAL - NEW	10/21/2005	PM8711	
RESIDENTIAL - NEW	09/01/2005	PM8595	
RESIDENTIAL - NEW	08/17/2005	PP3964	

X Improved | Vacant

Land Value Estimates for Land Table 4010.LAND VALUES

Description	Frontage	Depth	* Factors * Front	Depth	Rate	%Adj.	Reason	Value
ACREAGE			40.670 Acres		2,722	100		110,704
			40.67 Total Acres		Total Est. Land Value =			110,704

Land Improvement Cost Estimates

Description	Rate	Size	% Good	Cash Value
D/W/P: 3.5 Concrete	5.82	256	50	745
Total Estimated Land Improvements True Cash Value =				745

Public Improvements

- Dirt Road
- X Gravel Road
- Paved Road
- Storm Sewer
- Sidewalk
- Water
- Sewer
- X Electric
- Gas
- Curb
- Street Lights
- Standard Utilities
- Underground Utils.

Topography of Site

- X Level
- X Rolling
- Low
- High
- Landscaped
- Swamp
- X Wooded
- Pond
- Waterfront
- Ravine
- Wetland
- Flood Plain
- X PINES/OPEN

Tax Description

COM AT S 1/4 COR OF SEC; N 1320.42 FT; E 294.28 FT TO POB: N 355 FT; W 516.09 FT; N07D44M19S W 322.2 FT; N07D44M09S W 529.77 FT; N08D02M47S W 120.56 FT; E 406.77 FT; CONT E 1282.49 FT; S 902.73 FT; W 310.22; S 421.26 FT; W 678.71 FT TO POB. TOG W & SUB TO EASMT. --40.67 A M/L-- GW SEC 24 T24N R10W -MANTON- [[ASSESSED W/ 24-3101 '02 [[ASSESSED W/ 24-4102 '05 SPLIT ON 02/03/2009 FROM 2410-24-4201, 2410-24-3108;

Comments/Influences

Who	When	What
DB	10/23/2023	INSPECTION
GLA	10/31/2022	INSPECTION
GLA	05/13/2021	INSPECTION

Year	Land Value	Building Value	Assessed Value	Board of Review	Tribunal/ Other	Taxable Value
2024	55,400	15,900	71,300			54,510C
2023	49,600	12,600	62,200			51,915C
2022	38,300	0	38,300			38,300S
2021	0	0	0			0

The Equalizer. Copyright (c) 1999 - 2009. Licensed To: Township of Greenwood, County of Wexford, Michigan

*** Information herein deemed reliable but not guaranteed***

Building Type

	Single Family
	Mobile Home
	Town Home
	Duplex
	A-Frame
X	Wood Frame

Building Style: PLAIN

Yr Built	Remodeled
0	0

Condition: Good

Room List

	Basement
	1st Floor
	2nd Floor
	Bedrooms

(1) Exterior

	Wood/Shingle		
X	Aluminum/Vinyl		
	Brick		
X	Insulation		

(2) Windows

X	Many Avg. Few	X	Large Avg. Small

	Wood Sash
	Metal Sash
X	Vinyl Sash
	Double Hung
	Horiz. Slide
	Casement
	Double Glass
	Patio Doors
X	Storms & Screens

(3) Roof

X	Gable		Gambrel
	Hip		Mansard
	Flat		Shed

X	Asphalt Shingle

Chimney:

(3) Roof (cont.)

	Eavestrough
X	Insulation
0	Front Overhang
0	Other Overhang

(4) Interior

X	Drywall		Plaster
	Paneled		Wood T&G

Trim & Decoration

	Ex	X	Ord		Min

Size of Closets

	Lg	X	Ord		Small

Doors:		Solid	X	H.C.	

(5) Floors

Kitchen:
Other: Linoleum
Other: Carpeted

(6) Ceilings

X	Drywall		

(7) Excavation

Basement: 0 S.F.
Crawl: 0 S.F.
Slab: 0 S.F.
Height to Joists: 0.0

(8) Basement

	Conc. Block
	Poured Conc.
	Stone
	Treated Wood
	Concrete Floor

(9) Basement Finish

	Recreation SF
	Living SF
	Walkout Doors (B)
	No Floor SF
	Walkout Doors (A)

(10) Floor Support

Joists:
Unsupported Len:
Cntr.Sup:

(11) Heating/Cooling

X	Gas		Oil		Elec.
	Wood		Coal		Steam

	Forced Air w/o Ducts
	Forced Air w/ Ducts
	Forced Hot Water
	Electric Baseboard
	Elec. Ceil. Radiant
	Radiant (in-floor)
	Electric Wall Heat
X	Space Heater
	Wall/Floor Furnace
	Forced Heat & Cool
	Heat Pump
	No Heating/Cooling

	Central Air
	Wood Furnace

(12) Electric

150	Amps Service

No./Qual. of Fixtures

	Ex.	X	Ord.		Min

No. of Elec. Outlets

	Many	X	Ave.		Few

(13) Plumbing

1	Average Fixture(s)
	3 Fixture Bath
	2 Fixture Bath
	Softener, Auto
	Softener, Manual
	Solar Water Heat
	No Plumbing
	Extra Toilet
	Extra Sink
	Separate Shower
	Ceramic Tile Floor
	Ceramic Tile Wains
	Ceramic Tub Alcove
	Vent Fan

(14) Water/Sewer

	Public Water
	Public Sewer
1	Water Well
	1000 Gal Septic
	2000 Gal Septic

Lump Sum Items:

(15) Built-ins

	Appliance Allow.
	Cook Top
	Dishwasher
	Garbage Disposal
	Bath Heater
	Vent Fan
	Hot Tub
	Unvented Hood
	Vented Hood
	Intercom
	Jacuzzi Tub
	Jacuzzi repl.Tub
	Oven
	Microwave
	Standard Range
	Self Clean Range
	Sauna
	Trash Compactor
	Central Vacuum
	Security System

(15) Fireplaces

	Interior 1 Story
	Interior 2 Story
	2nd/Same Stack
	Two Sided
	Exterior 1 Story
	Exterior 2 Story
	Prefab 1 Story
	Prefab 2 Story
	Heat Circulator
	Raised Hearth
	Wood Stove
	Direct-Vented Gas

Class: D
Effec. Age: 3
Floor Area: 396
Total Base New : 49,484 E.C.F.
Total Depr Cost: 24,000 X 1.297
Estimated T.C.V: 31,128

(16) Porches/Decks

Area	Type
24	WCP (1 Story)

(17) Garage

Year Built:
Car Capacity:
Class: D
Exterior: Pole
Brick Ven.: 0
Stone Ven.: 0
Common Wall: Detache
Foundation: 18 Inch
Finished ?:
Auto. Doors: 0
Mech. Doors: 0
Area: 572
% Good: 0
Storage Area: 0
No Conc. Floor: 572

Bsmnt Garage:

Carport Area:
Roof:

Cost Est. for Res. Bldg: 1 Recreation Cabin PLAIN Cls D Blt 0
(11) Heating System: Space Heater
Ground Area = 396 SF Floor Area = 396 SF.
Phy/Ab.Phy/Func/Econ/Comb. % Good=97/50/100/100/48.5
Building Areas

Description	Size	Cost New	Depr. Cost
Other Additions/Adjustments			
Garages			
Class: D Exterior: Pole (Unfinished)			
Base Cost	572	12,830	6,223
No Concrete Floor	572	-3,209	-1,556
Water/Sewer			
Water Well, 100 Feet	1	5,545	2,689
Porches			
WCP (1 Story)	24	1,600	776
	Totals:	49,484	24,000

Notes:

ECF (RESIDENTIAL) 1.297 => TCV: 31,128

*** Information herein deemed reliable but not guaranteed***

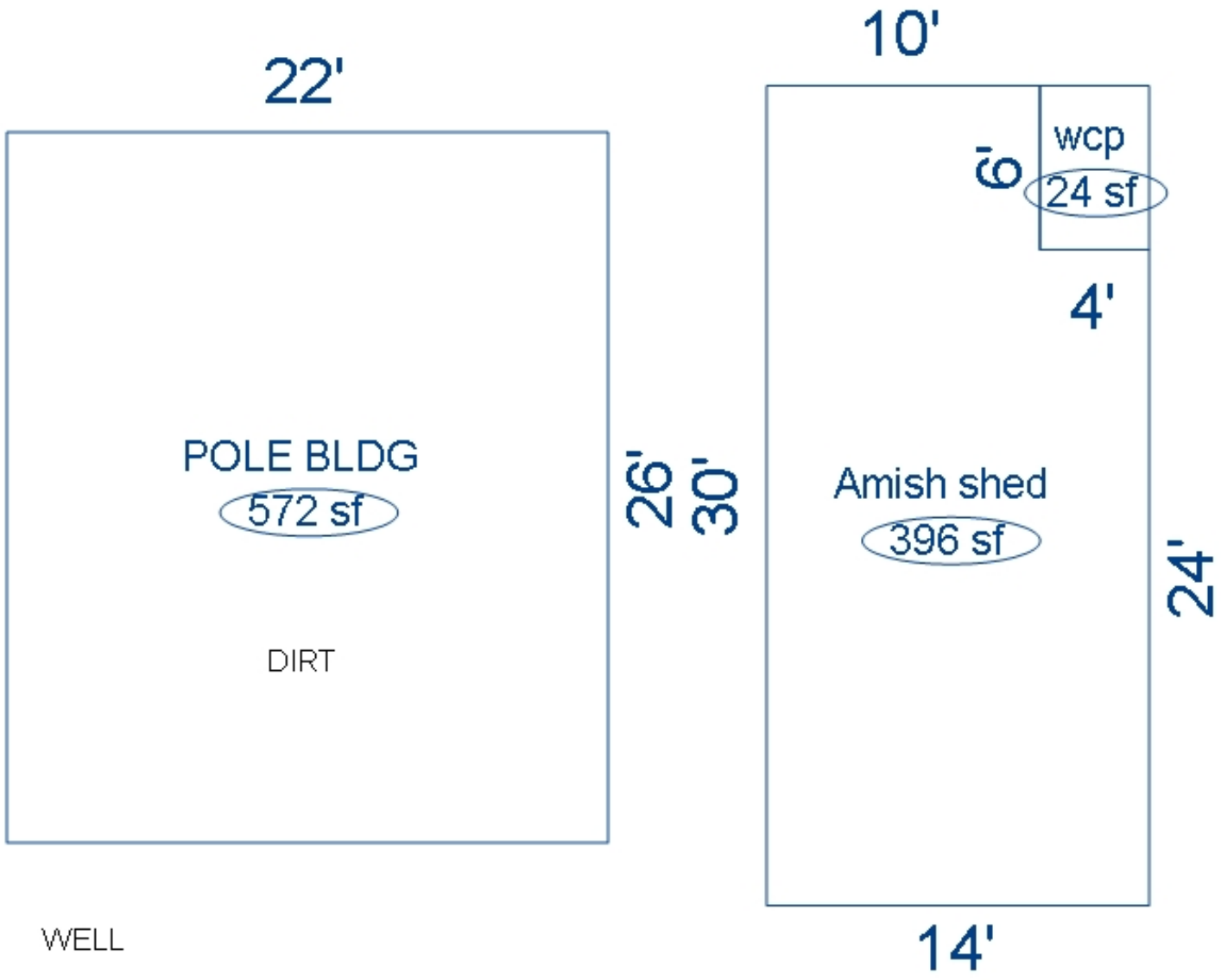

*** Information herein deemed reliable but not guaranteed***

Parcel Number: 2410-24-4301 Jurisdiction: GREENWOOD TWP County: WEXFORD Printed on 02/15/2024

Grantor	Grantee	Sale Price	Sale Date	Inst. Type	Terms of Sale	Liber & Page	Verified By	Prcnt. Trans.
ZAWACKI, DAVID, TRUSTEE LO	ZAWACKI, DAVID	0	04/22/2020	WD	14-INTO/OUT OF TRUST	687/1371	DEED	0.0
ZAWACKI, DAVID	ZAWACKI, DAVID TRUST	0	04/22/2020	WD	14-INTO/OUT OF TRUST	687/1372	DEED	0.0

Property Address

5701 E 10 RD

Owner's Name/Address

ZAWACKI, DAVID TRUST
4204 5 MILE RD NE
GRAND RAPIDS MI 49525

Tax Description

SW 1/4 OF SE 1/4 40 A. GW. SEC. 24 T24N R10W -MANTON-

Comments/Influences

Class: RESIDENTIAL-IMPROV Zoning:
School: MANTON CONSOLIDATED SCHOOLS
P.R.E. 0%
:
2024 Est TCV 537,420 TCV/TFA: 223.18

Building Permit(s)	Date	Number	Status
Res. New Construction	07/22/2021	PB21-0163	ENTERED

X Improved | Vacant

	Public Improvements
	Dirt Road
	Gravel Road
X	Paved Road
	Storm Sewer
	Sidewalk
	Water
	Sewer
X	Electric
	Gas
	Curb
	Street Lights
	Standard Utilities
	Underground Utils.

	Topography of Site
	Level
X	Rolling
	Low
X	High
	Landscaped
	Swamp
X	Wooded
	Pond
	Waterfront
	Ravine
	Wetland
	Flood Plain
X	PINES/OPEN

Who	When	What
DB	10/23/2023	INSPECTION
GLA	11/01/2021	INSPECTION
GLA	05/30/2017	INSPECTION

Land Value Estimates for Land Table 4010.LAND VALUES

Description	Frontage	Depth	* Factors * Front	Depth	Rate	%Adj.	Reason	Value
ACREAGE			38.520 Acres		2,722	100		104,851
ROW			1.480 Acres		0	100		0
			40.00 Total Acres		Total Est. Land Value =			104,851

Land Improvement Cost Estimates

Description	Rate	Size	% Good	Cash Value
D/W/P: 3.5 Concrete	6.21	112	0	0
Wood Frame	20.22	576	45	5,241
Wood Frame	23.57	160	45	1,697
Total Estimated Land Improvements True Cash Value =				6,938

Year	Land Value	Building Value	Assessed Value	Board of Review	Tribunal/ Other	Taxable Value
2024	52,400	216,300	268,700			202,308C
2023	46,400	173,900	220,300			192,675C
2022	37,000	146,500	183,500			183,500S
2021	33,000	17,900	50,900			45,990C

The Equalizer. Copyright (c) 1999 - 2009. Licensed To: Township of Greenwood, County of Wexford, Michigan

*** Information herein deemed reliable but not guaranteed***

Building Type

X	Single Family
	Mobile Home
	Town Home
	Duplex
	A-Frame
X	Wood Frame

Building Style: PLAIN

Yr Built	Remodeled
0	0

Condition: Good

Room List

	Basement
	1st Floor
	2nd Floor
	Bedrooms

(1) Exterior

	Wood/Shingle
X	Aluminum/Vinyl
	Brick
X	Insulation

(2) Windows

X	Many Avg. Few		Large Avg. Small

	Wood Sash
	Metal Sash
X	Vinyl Sash
	Double Hung
	Horiz. Slide
	Casement
	Double Glass
	Patio Doors
X	Storms & Screens

(3) Roof

X	Gable		Gambrel
	Hip		Mansard
	Flat		Shed

X	Asphalt Shingle

Chimney:

(3) Roof (cont.)

	Eavestrough
X	Insulation
0	Front Overhang
0	Other Overhang

(4) Interior

X	Drywall		Plaster
	Paneled		Wood T&G

Trim & Decoration

	Ex	X	Ord		Min

Size of Closets

	Lg	X	Ord		Small

Doors:		Solid	X	H.C.	

(5) Floors

Kitchen:
Other: Linoleum
Other: Carpeted

(6) Ceilings

X	Drywall		

(7) Excavation

Basement: 1736 S.F.
Crawl: 0 S.F.
Slab: 0 S.F.
Height to Joists: 0.0

(8) Basement

	Conc. Block
	Poured Conc.
	Stone
	Treated Wood
	Concrete Floor

(9) Basement Finish

	Recreation SF
	Living SF
1	Walkout Doors (B)
	No Floor SF
	Walkout Doors (A)

(10) Floor Support

Joists:
Unsupported Len:
Cntr.Sup:

(11) Heating/Cooling

X	Gas		Oil		Elec.
	Wood		Coal		Steam

	Forced Air w/o Ducts
	Forced Air w/ Ducts
	Forced Hot Water
	Electric Baseboard
	Elec. Ceil. Radiant
	Radiant (in-floor)
	Electric Wall Heat
	Space Heater
	Wall/Floor Furnace
X	Forced Heat & Cool
	Heat Pump
	No Heating/Cooling

	Central Air
	Wood Furnace

(12) Electric

150	Amps Service

No./Qual. of Fixtures

	Ex.	X	Ord.		Min

No. of Elec. Outlets

	Many	X	Ave.		Few

(13) Plumbing

	Average Fixture(s)
1	3 Fixture Bath
1	2 Fixture Bath
	Softener, Auto
	Softener, Manual
	Solar Water Heat
	No Plumbing
	Extra Toilet
	Extra Sink
	Separate Shower
	Ceramic Tile Floor
	Ceramic Tile Wains
	Ceramic Tub Alcove
	Vent Fan

(14) Water/Sewer

	Public Water
	Public Sewer
1	Water Well
1	1000 Gal Septic
	2000 Gal Septic

Lump Sum Items:

(15) Built-ins

	Appliance Allow.
	Cook Top
	Dishwasher
	Garbage Disposal
	Bath Heater
	Vent Fan
	Hot Tub
	Unvented Hood
	Vented Hood
	Intercom
	Jacuzzi Tub
	Jacuzzi repl.Tub
	Oven
	Microwave
	Standard Range
	Self Clean Range
	Sauna
	Trash Compactor
	Central Vacuum
	Security System

(15) Fireplaces

	Interior 1 Story
	Interior 2 Story
	2nd/Same Stack
	Two Sided
	Exterior 1 Story
	Exterior 2 Story
1	Prefab 1 Story
	Prefab 2 Story
	Heat Circulator
	Raised Hearth
	Wood Stove
	Direct-Vented Gas

Class: CD
Effec. Age: 5
Floor Area: 2,408
Total Base New : 345,439 E.C.F.
Total Depr Cost: 328,166 X 1.297
Estimated T.C.V: 425,631

(16) Porches/Decks

Area	Type
120	CCP (1 Story)
168	WSEP (1 Story)
168	Composite

(17) Garage

Year Built:
Car Capacity:
Class: CD
Exterior: Siding
Brick Ven.: 0
Stone Ven.: 0
Common Wall: Detache
Foundation: 18 Inch
Finished ?:
Auto. Doors: 0
Mech. Doors: 0
Area: 576
% Good: 0
Storage Area: 0
No Conc. Floor: 0

Bsmnt Garage:

Carport Area:
Roof:

Cost Est. for Res. Bldg: 1 Single Family PLAIN Cls CD Blt 0
(11) Heating System: Forced Heat & Cool
Ground Area = 1736 SF Floor Area = 2408 SF.
Phy/Ab.Phy/Func/Econ/Comb. % Good=95/100/100/100/95
Building Areas

Stories	Exterior	Foundation	Size	Cost New	Depr. Cost
1.5 Story	Siding	Basement	1,344		
1 Story	Siding	Basement	392		
			Total:	267,663	254,279
Other Additions/Adjustments					
Basement, Outside Entrance, Below Grade			1	2,176	2,067
Plumbing					
2 Fixture Bath			1	2,614	2,483
Water/Sewer					
1000 Gal Septic			1	4,582	4,353
Water Well, 150 Feet			1	8,419	7,998
Porches					
CCP (1 Story)			120	3,064	2,911
WSEP (1 Story)			168	8,022	7,621
Garages					
Class: CD Exterior: Siding Foundation: 18 Inch (Unfinished)					
Base Cost			576	19,935	18,938
Class: D Exterior: Pole (Unfinished)					
Base Cost			1200	23,076	21,922
Fireplaces					
Prefab 1 Story			1	2,204	2,094
Deck					
Composite			168	3,684	3,500
			Totals:	345,439	328,166

Notes:
ECF (RESIDENTIAL) 1.297 => TCV: 425,631

*** Information herein deemed reliable but not guaranteed***

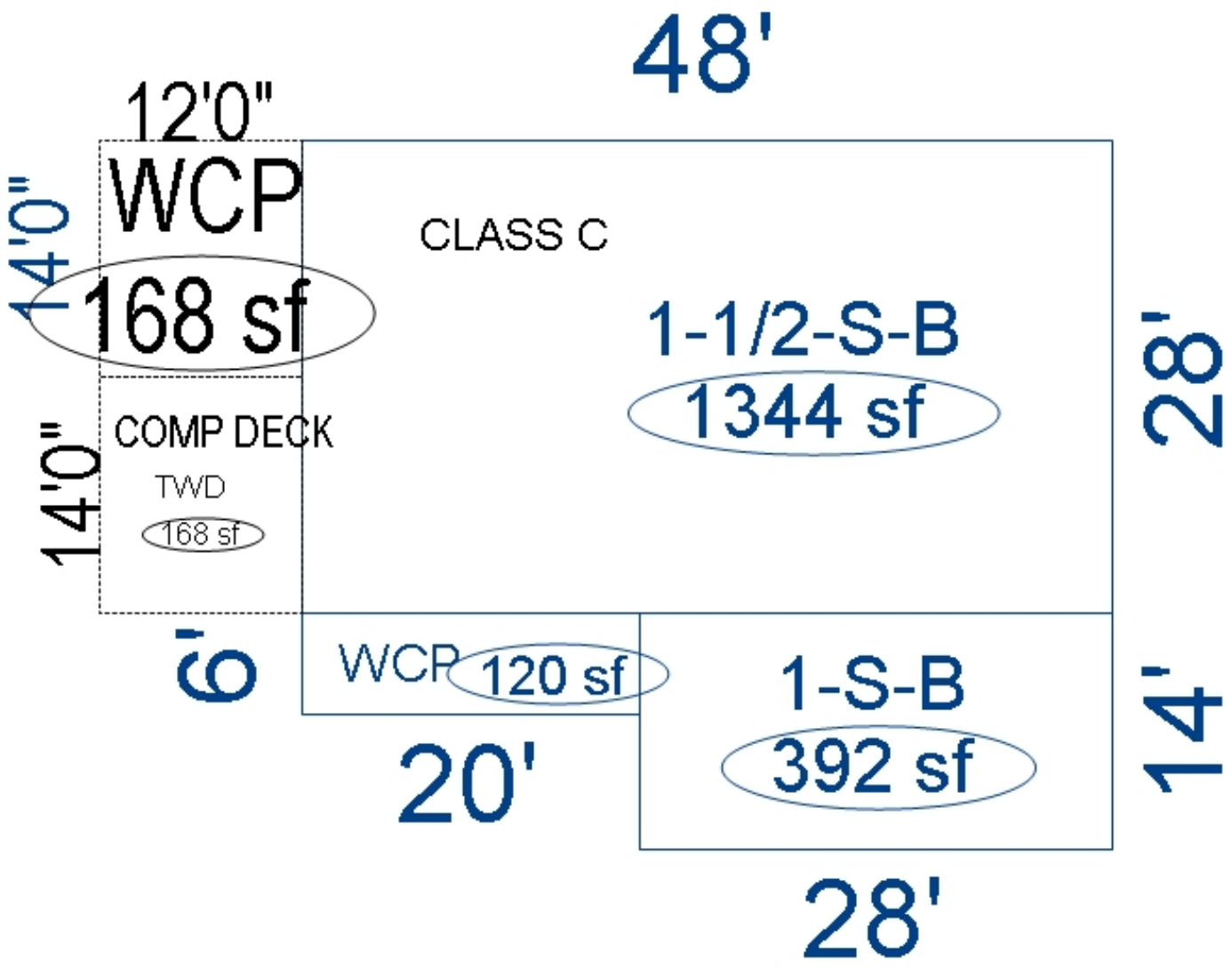

*** Information herein deemed reliable but not guaranteed***

Parcel Number: 2410-24-4401 Jurisdiction: GREENWOOD TWP County: WEXFORD Printed on 02/15/2024

Grantor	Grantee	Sale Price	Sale Date	Inst. Type	Terms of Sale	Liber & Page	Verified By	Prcnt. Trans.
PEPLAU, EMIL J.	KAWKA, WILLIAM & KATHLEEN	47,000	05/09/1994	LC	03-ARM'S LENGTH	339:304	DEED	0.0

Property Address
5875 E 10 RD

Owner's Name/Address
KAWKA, WILLIAM W.
& KATHLEEN M.
5211 PUTNAM
WEST BLOOMFIELD MI 48323

Tax Description
SE 1/4 OF SE 1/4 40 A. GW. SEC. 24 T24N R10W -MANTON-

Comments/Influences

The Equalizer. Copyright (c) 1999 - 2009. Licensed To: Township of Greenwood, County of Wexford, Michigan

Class: RESIDENTIAL-IMPROV Zoning:
School: MANTON CONSOLIDATED SCHOOLS
P.R.E. 0%
:
2024 Est TCV 198,771 TCV/TFA: 276.07

Building Permit(s)	Date	Number	Status
RESIDENTIAL - REMODEL	10/25/2000	PB10039	

X Improved | Vacant

	Public Improvements
	Dirt Road
	Gravel Road
X	Paved Road
	Storm Sewer
	Sidewalk
	Water
	Sewer
X	Electric
	Gas
	Curb
	Street Lights
	Standard Utilities
	Underground Utils.

	Topography of Site
	Level
X	Rolling
X	Low
	High
	Landscaped
X	Swamp
X	Wooded
	Pond
	Waterfront
	Ravine
	Wetland
	Flood Plain
X	PINES

Who	When	What
GLA	05/30/2017	INSPECTION

Land Value Estimates for Land Table 4010.LAND VALUES

Description	Frontage	Depth	* Factors * Front	Depth	Rate	%Adj.	Reason	Value
ACREAGE			38.000 Acres		2,722	100		103,436
ROW			2.000 Acres		0	100		0
			40.00 Total Acres		Total Est. Land Value =			103,436

Land Improvement Cost Estimates

Description	Rate	Size	% Good	Cash Value
D/W/P: 4in Concrete	7.01	156	58	635
Total Estimated Land Improvements True Cash Value =				635

Year	Land Value	Building Value	Assessed Value	Board of Review	Tribunal/ Other	Taxable Value
2024	51,700	47,700	99,400			43,596C
2023	45,900	39,200	85,100			41,520C
2022	36,700	33,300	70,000			39,543C
2021	32,600	33,900	66,500			38,280C

*** Information herein deemed reliable but not guaranteed***

Building Type

X	Single Family
	Mobile Home
	Town Home
	Duplex
	A-Frame
X	Wood Frame

Building Style: PLAIN

Yr Built	Remodeled
0	1977

Condition: Good

Room List

	Basement
	1st Floor
	2nd Floor
	Bedrooms

(1) Exterior

X	Wood/Shingle
	Aluminum/Vinyl
	Brick
X	Insulation

(2) Windows

	Many		Large
X	Avg.	X	Avg.
	Few		Small

X	Wood Sash
	Metal Sash
	Vinyl Sash
	Double Hung
	Horiz. Slide
	Casement
	Double Glass
	Patio Doors
X	Storms & Screens

(3) Roof

X	Gable		Gambrel
	Hip		Mansard
	Flat		Shed

X	Asphalt Shingle

Chimney:

(3) Roof (cont.)

	Eavestrough
X	Insulation
0	Front Overhang
0	Other Overhang

(4) Interior

X	Drywall		Plaster
	Paneled		Wood T&G

Trim & Decoration

	Ex	X	Ord		Min

Size of Closets

	Lg	X	Ord		Small

Doors:		Solid	X	H.C.	

(5) Floors

Kitchen:
Other: Linoleum
Other: Carpeted

(6) Ceilings

X	Drywall

(7) Excavation

Basement: 720 S.F.
Crawl: 0 S.F.
Slab: 0 S.F.
Height to Joists: 0.0

(8) Basement

	Conc. Block
	Poured Conc.
	Stone
	Treated Wood
	Concrete Floor

(9) Basement Finish

	Recreation SF
	Living SF
	Walkout Doors (B)
	No Floor SF
	Walkout Doors (A)

(10) Floor Support

Joists:
Unsupported Len:
Cntr.Sup:

(11) Heating/Cooling

X	Gas		Oil		Elec.
	Wood		Coal		Steam

	Forced Air w/o Ducts
X	Forced Air w/ Ducts
	Forced Hot Water
	Electric Baseboard
	Elec. Ceil. Radiant
	Radiant (in-floor)
	Electric Wall Heat
	Space Heater
	Wall/Floor Furnace
	Forced Heat & Cool
	Heat Pump
	No Heating/Cooling

	Central Air
	Wood Furnace

(12) Electric

150	Amps Service

No./Qual. of Fixtures

	Ex.	X	Ord.		Min

No. of Elec. Outlets

	Many	X	Ave.		Few

(13) Plumbing

	Average Fixture(s)
1	3 Fixture Bath
	2 Fixture Bath
	Softener, Auto
	Softener, Manual
	Solar Water Heat
	No Plumbing
	Extra Toilet
	Extra Sink
	Separate Shower
	Ceramic Tile Floor
	Ceramic Tile Wains
	Ceramic Tub Alcove
	Vent Fan

(14) Water/Sewer

	Public Water
	Public Sewer
1	Water Well
1	1000 Gal Septic
	2000 Gal Septic

Lump Sum Items:

(15) Built-ins

	Appliance Allow.
	Cook Top
	Dishwasher
	Garbage Disposal
	Bath Heater
	Vent Fan
	Hot Tub
	Unvented Hood
	Vented Hood
	Intercom
	Jacuzzi Tub
	Jacuzzi repl.Tub
	Oven
	Microwave
	Standard Range
	Self Clean Range
	Sauna
	Trash Compactor
	Central Vacuum
	Security System

(15) Fireplaces

	Interior 1 Story
	Interior 2 Story
	2nd/Same Stack
	Two Sided
	Exterior 1 Story
	Exterior 2 Story
	Prefab 1 Story
	Prefab 2 Story
	Heat Circulator
	Raised Hearth
	Wood Stove
	Direct-Vented Gas

Class: CD
Effec. Age: 50
Floor Area: 720
Total Base New : 146,143 E.C.F.
Total Depr Cost: 73,015 X 1.297
Estimated T.C.V: 94,700

(16) Porches/Decks

Area	Type
42	WPP
260	Treated Wood

(17) Garage

Year Built:
Car Capacity:
Class: CD
Exterior: Siding
Brick Ven.: 0
Stone Ven.: 0
Common Wall: Detache
Foundation: 42 Inch
Finished ?:
Auto. Doors: 0
Mech. Doors: 0
Area: 672
% Good: 0
Storage Area: 0
No Conc. Floor: 0

Bsmnt Garage:

Carport Area:
Roof:

Cost Est. for Res. Bldg: 1 Single Family PLAIN Cls CD Blt 0
(11) Heating System: Forced Air w/ Ducts
Ground Area = 720 SF Floor Area = 720 SF.
Phy/Ab.Phy/Func/Econ/Comb. % Good=50/100/100/100/50
Building Areas

Stories	Exterior	Foundation	Size	Cost New	Depr. Cost	
1 Story	Siding	Basement	720			
			Total:	103,393	51,695	
Other Additions/Adjustments						
Water/Sewer						
1000 Gal Septic			1	4,582	2,291	
Water Well, 100 Feet			1	5,680	2,840	
Porches						
WPP			42	1,756	878	
Deck						
Treated Wood			260	4,844	2,422	
Garages						
Class: CD Exterior: Siding Foundation: 42 Inch (Unfinished)						
Base Cost			672	24,985	12,492	
Local Cost Items						
WOOD LEAN TO			148	903	397	*4
			Totals:	146,143	73,015	

Notes:

ECF (RESIDENTIAL) 1.297 => TCV: 94,700

*** Information herein deemed reliable but not guaranteed***

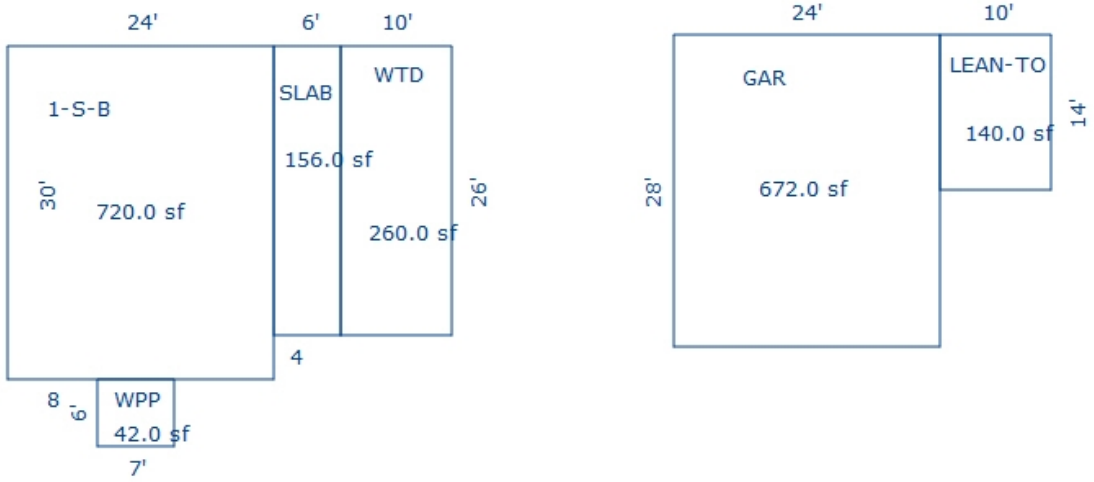

Sketch by Apex Sketch

*** Information herein deemed reliable but not guaranteed***

Parcel Number: 2410-25-1101 Jurisdiction: GREENWOOD TWP County: WEXFORD Printed on 02/15/2024

Grantor	Grantee	Sale Price	Sale Date	Inst. Type	Terms of Sale	Liber & Page	Verified By	Prcnt. Trans.

Property Address

Owner's Name/Address

EMERALD X-MAS TREE CO.
1100 BELLEVUE WAY NE 8A-164
BELLEVUE WA 98004

Tax Description

NE 1/4 OF NE 1/4 40 A. GW. SEC. 25 T24N R10W -MANTON-

Comments/Influences

The Equalizer. Copyright (c) 1999 - 2009. Licensed To: Township of Greenwood, County of Wexford, Michigan

Class: RESIDENTIAL-VACANT Zoning:

School: MANTON CONSOLIDATED SCHOOLS

P.R.E. 0%

:

2024 Est TCV 103,436

Building Permit(s)	Date	Number	Status

	Improved	X	Vacant

	Public Improvements
X	Dirt Road
X	Gravel Road
X	Paved Road
	Storm Sewer
	Sidewalk
	Water
	Sewer
	Electric
	Gas
	Curb
	Street Lights
	Standard Utilities
	Underground Utils.

	Topography of Site
	Level
X	Rolling
X	Low
X	High
	Landscaped
X	Swamp
X	Wooded
	Pond
	Waterfront
	Ravine
	Wetland
	Flood Plain
X	PINES

Who	When	What
GLA	05/30/2017	INSPECTION

Land Value Estimates for Land Table 4010.LAND VALUES

Description	Frontage	Depth	* Factors * Front	Depth	Rate	%Adj.	Reason	Value
ACREAGE			38.000 Acres		2,722	100		103,436
ROW			2.000 Acres		0	100		0
			40.00 Total Acres		Total Est. Land Value =			103,436

Year	Land Value	Building Value	Assessed Value	Board of Review	Tribunal/ Other	Taxable Value
2024	51,700	0	51,700			22,287C
2023	45,900	0	45,900			21,226C
2022	36,700	0	36,700			20,216C
2021	32,600	0	32,600			19,571C

*** Information herein deemed reliable but not guaranteed***

Parcel Number: 2410-25-1201-01 Jurisdiction: GREENWOOD TWP County: WEXFORD Printed on 02/15/2024

Grantor	Grantee	Sale Price	Sale Date	Inst. Type	Terms of Sale	Liber & Page	Verified By	Prcnt. Trans.
MOHLER, ALAN D.	MOHLER, ALAN D LE	1	02/24/2018	QC	18-LIFE ESTATE	682/34	DEED	0.0

Property Address

5592 E 10 RD

Owner's Name/Address

MOHLER, ALAN D LE
5592 E 10 RD
MANTON MI 49663

Tax Description

W 1/2 OF NE 1/4 EXC COM 584 FT E OF N 1/4-POST: S 193 FT; E 136 FT; N 193 FT; W
TO BEG & EXC COM AT NE COR OF W 1/2 OF NE 1/4 AS POB; W 300 FT; S 500 FT; E 300 FT; N TO POB. --75.96 A. M/L-- GW. SEC. 25 T24N R10W -MANTON-
SPLIT ON 01/05/2018 FROM 2410-25-1201;

Comments/Influences

Split/Comb. on 01/05/2018 completed 01/05/2018 MOLLY ;
Parent Parcel(s): 2410-25-1201;
Child Parcel(s): 2410-25-1201-02, 2410-25-1201-01;

The Equalizer. Copyright (c) 1999 - 2009. Licensed To: Township of Greenwood, County of Wexford, Michigan

Class: RESIDENTIAL-IMPROV Zoning:

School: MANTON CONSOLIDATED SCHOOLS

P.R.E. 100% / /

:

2024 Est TCV 290,467 TCV/TFA: 206.89

Building Permit(s)	Date	Number	Status

X Improved | Vacant

Public Improvements

- Dirt Road
- Gravel Road
- Paved Road
- Storm Sewer
- Sidewalk
- Water
- Sewer
- Electric
- Gas
- Curb
- Street Lights
- Standard Utilities
- Underground Utils.

Topography of Site

- Level
- Rolling
- Low
- High
- Landscaped
- Swamp
- Wooded
- Pond
- Waterfront
- Ravine
- Wetland
- Flood Plain

Who	When	What
GLA	05/13/2021	INSPECTION

Land Value Estimates for Land Table 4010.LAND VALUES

Description	Frontage	Depth	* Factors * Front	Depth	Rate	%Adj.	Reason	Value
ACREAGE			75.290 Acres		2,559	100		192,699
			0.670 Acres		0	100		0
			75.96 Total Acres		Total Est. Land Value =			192,699

Year	Land Value	Building Value	Assessed Value	Board of Review	Tribunal/ Other	Taxable Value
2024	96,300	48,900	145,200			83,570C
2023	83,400	39,300	122,700			79,591C
2022	64,000	32,800	96,800			75,801C
2021	58,900	28,100	87,000			73,380C

*** Information herein deemed reliable but not guaranteed***

Building Type

	Single Family
X	Mobile Home
	Town Home
	Duplex
	A-Frame

X	Wood Frame

Building Style: SWT/DWT

Yr Built	Remodeled
1900	0

Condition: Average

Room List

	Basement
	1st Floor
	2nd Floor
	Bedrooms

(1) Exterior

	Wood/Shingle
	Aluminum/Vinyl
	Brick
X	Vinyl
	Insulation

(2) Windows

X	Many		Large
	Avg.	X	Avg.
	Few		Small

	Wood Sash
	Metal Sash
X	Vinyl Sash
X	Double Hung
	Horiz. Slide
	Casement
	Double Glass
	Patio Doors
X	Storms & Screens

(3) Roof

X	Gable		Gambrel
	Hip		Mansard
	Flat		Shed

X	Asphalt Shingle

Chimney:

(3) Roof (cont.)

	Eavestrough
	Insulation
0	Front Overhang
0	Other Overhang

(4) Interior

	Drywall		Plaster
	Paneled		Wood T&G

Trim & Decoration

	Ex	X	Ord		Min

Size of Closets

	Lg	X	Ord		Small

Doors:		Solid	X	H.C.	

(5) Floors

Kitchen:
Other:
Other:

(6) Ceilings

(7) Excavation

Basement: 1404 S.F.
Crawl: 0 S.F.
Slab: 0 S.F.
Height to Joists: 0.0

(8) Basement

	Conc. Block
	Poured Conc.
	Stone
	Treated Wood
	Concrete Floor

(9) Basement Finish

	Recreation SF
	Living SF
	Walkout Doors (B)
	No Floor SF
	Walkout Doors (A)

(10) Floor Support

Joists:
Unsupported Len:
Cntr.Sup:

(11) Heating/Cooling

X	Gas		Oil		Elec.
	Wood		Coal		Steam

X	Forced Warm Air
	Wall Furnace
	Warm & Cool Air
	Heat Pump

	Central Air
	Wood Furnace

(12) Electric

0	Amps Service

No./Qual. of Fixtures

	Ex.	X	Ord.		Min

No. of Elec. Outlets

	Many	X	Ave.		Few

(13) Plumbing

2	Average Fixture(s)
	3 Fixture Bath
	2 Fixture Bath
	Softener, Auto
	Softener, Manual
	Solar Water Heat
	No Plumbing
	Extra Toilet
	Extra Sink
	Separate Shower
	Ceramic Tile Floor
	Ceramic Tile Wains
	Ceramic Tub Alcove
	Vent Fan

(14) Water/Sewer

	Public Water
	Public Sewer
1	Water Well
1	1000 Gal Septic
	2000 Gal Septic

Lump Sum Items:
500

(15) Built-ins

	Appliance Allow.
	Cook Top
	Dishwasher
	Garbage Disposal
	Bath Heater
	Vent Fan
	Hot Tub
	Unvented Hood
	Vented Hood
	Intercom
	Jacuzzi Tub
	Jacuzzi repl.Tub
	Oven
	Microwave
	Standard Range
	Self Clean Range
	Sauna
	Trash Compactor
	Central Vacuum
	Security System

(15) Fireplaces

	Interior 1 Story
	Interior 2 Story
	2nd/Same Stack
	Two Sided
	Exterior 1 Story
	Exterior 2 Story
	Prefab 1 Story
	Prefab 2 Story
	Heat Circulator
	Raised Hearth
	Wood Stove
	Direct-Vented Gas

Class: Fair
Effec. Age: 20
Floor Area:
Total Base New : 163,868 E.C.F.
Total Depr Cost: 75,380 X 1.297
Estimated T.C.V: 97,768

(16) Porches/Decks

Area	Type
212	WCP (1 Story)
80	Treated Wood

(17) Garage

Year Built:
Car Capacity:
Class: C
Exterior: Pole
Brick Ven.: 0
Stone Ven.: 0
Common Wall: Detache
Foundation: 18 Inch
Finished ?:
Auto. Doors: 0
Mech. Doors: 0
Area: 1200
% Good: 0
Storage Area: 0
No Conc. Floor: 0

Bsmnt Garage:

Carport Area:
Roof:

Cost Est. for Res. Bldg: 1 Mobile Home SWT/DWT Cls Fair Blt 1900
(11) Heating System: Forced Warm Air
Ground Area = 1404 SF Floor Area = 1404 SF.
Phy/Ab.Phy/Func/Econ/Comb. % Good=46/100/100/100/46
Building Areas

Type	Ext. Walls	Roof/Fnd.	Size	Cost New	Depr. Cost
Main Home	Siding	Comp.Shingle	1404		
Basement	Block, 6"		1404		
			Total:	112,093	51,563
Other Additions/Adjustments					
Plumbing					
3 Fixture Bath			1	2,745	1,263
Water/Sewer					
1000 Gal Septic			1	4,582	2,108
Water Well, 100 Feet			1	5,680	2,613
Porches					
WCP (1 Story)			212	6,879	3,164
Deck					
Treated Wood			80	2,229	1,025
Garages					
Class: C Exterior: Pole (Unfinished)					
Base Cost			1200	29,160	13,414
Lump Sum Items					
OLD TRAILER				500	230
			Totals:	163,868	75,380

Notes:

ECF (RESIDENTIAL) 1.297 => TCV: 97,768

*** Information herein deemed reliable but not guaranteed***

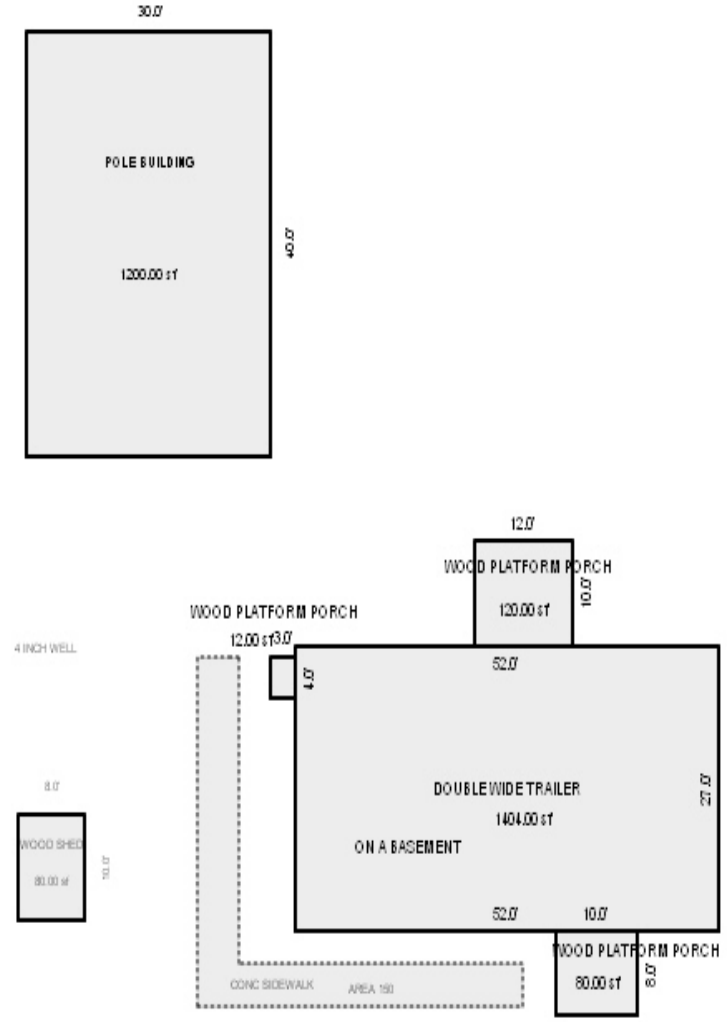

Sketch by Apex Medina™

*** Information herein deemed reliable but not guaranteed***

Parcel Number: 2410-25-1201-02 Jurisdiction: GREENWOOD TWP County: WEXFORD Printed on 02/15/2024

Grantor	Grantee	Sale Price	Sale Date	Inst. Type	Terms of Sale	Liber & Page	Verified By	Prcnt. Trans.
MOHLER, ALAN D.	MOHLER, ALAN EDMUND	1	02/24/2018	QC	09-FAMILY	682 /15	DEED	0.0

Property Address

5682 E 10 RD

Owner's Name/Address

MOHLER, ALAN EDMUND
5592 E 10 RD
MANTON MI 49663

Tax Description

BEG AT NE COR OF W 1/2 OF NE 1/4 AS POB; W 300 FT; S 500 FT; E 300 FT; N TO POB. -3.44 A. M/L-- GW. SEC. 25 T24N R10W -MANTON-
SPLIT ON 01/05/2018 FROM 2410-25-1201;

Comments/Influences

Split/Comb. on 01/05/2018 completed 01/05/2018 MOLLY ;
Parent Parcel(s): 2410-25-1201;
Child Parcel(s): 2410-25-1201-02, 2410-25-1201-01;

The Equalizer. Copyright (c) 1999 - 2009.
Licensed To: Township of Greenwood, County of Wexford, Michigan

Class: RESIDENTIAL-IMPROV Zoning:
School: MANTON CONSOLIDATED SCHOOLS
P.R.E. 0%
:
2024 Est TCV 29,469 TCV/TFA: 27.70

Building Permit(s)	Date	Number	Status
Permit renewal (50% of ori	04/19/2021	PB21-0047	ENTERED
RESIDENTIAL - NEW	10/01/2018	PB18-0190	RECHECK

X Improved | Vacant

Public Improvements

- Dirt Road
- Gravel Road
- Paved Road
- Storm Sewer
- Sidewalk
- Water
- Sewer
- Electric
- Gas
- Curb
- Street Lights
- Standard Utilities
- Underground Utils.

Topography of Site

- Level
- Rolling
- Low
- High
- Landscaped
- Swamp
- Wooded
- Pond
- Waterfront
- Ravine
- Wetland
- Flood Plain

Who	When	What
JB	10/23/2023	INSPECTION
GLA	10/31/2022	INSPECTION

Land Value Estimates for Land Table 4010.LAND VALUES

Description	Frontage	Depth	* Factors * Front	Depth	Rate	%Adj.	Reason	Value
ACREAGE			3.200 Acres		5,417	100		17,334
			0.240 Acres		0	100		0
			3.44 Total Acres		Total Est. Land Value =			17,334

Land Improvement Cost Estimates

Description	Rate	Size	% Good	Cash Value
Wood Frame	19.95	192	88	3,370
Total Estimated Land Improvements True Cash Value =				3,370

Year	Land Value	Building Value	Assessed Value	Board of Review	Tribunal/ Other	Taxable Value
2024	8,700	6,000	14,700			7,856C
2023	7,500	0	7,500			2,244C
2022	6,600	0	6,600			2,138C
2021	6,700	0	6,700			2,070C

*** Information herein deemed reliable but not guaranteed***

Building Type

X	Single Family
	Mobile Home
	Town Home
	Duplex
	A-Frame
X	Wood Frame

Building Style: PLAIN

Yr Built	Remodeled
0	0

Condition: Good
Part. Construct.: 5%

Room List

	Basement
	1st Floor
	2nd Floor
	Bedrooms

(1) Exterior

X	Wood/Shingle
	Aluminum/Vinyl
	Brick
X	Insulation

(2) Windows

X	Many Avg. Few	X	Large Avg. Small

	Wood Sash
	Metal Sash
X	Vinyl Sash
	Double Hung
	Horiz. Slide
	Casement
	Double Glass
	Patio Doors
X	Storms & Screens

(3) Roof

X	Gable		Gambrel
	Hip		Mansard
	Flat		Shed

X	Asphalt Shingle

Chimney:

(3) Roof (cont.)

	Eavestrough
X	Insulation
0	Front Overhang
0	Other Overhang

(4) Interior

X	Drywall Paneled		Plaster Wood T&G

Trim & Decoration

	Ex	X	Ord		Min

Size of Closets

	Lg	X	Ord		Small

Doors: | | Solid | X | H.C.

(5) Floors

Kitchen:
Other: Linoleum
Other: Carpeted

(6) Ceilings

X	Drywall

(7) Excavation

Basement: 1064 S.F.
Crawl: 0 S.F.
Slab: 0 S.F.
Height to Joists: 0.0

(8) Basement

	Conc. Block
	Poured Conc.
	Stone
	Treated Wood
	Concrete Floor

(9) Basement Finish

	Recreation SF
	Living SF
	Walkout Doors (B)
	No Floor SF
	Walkout Doors (A)

(10) Floor Support

Joists:
Unsupported Len:
Cntr.Sup:

(11) Heating/Cooling

X	Gas		Oil		Elec.
	Wood		Coal		Steam

	Forced Air w/o Ducts
X	Forced Air w/ Ducts
	Forced Hot Water
	Electric Baseboard
	Elec. Ceil. Radiant
	Radiant (in-floor)
	Electric Wall Heat
	Space Heater
	Wall/Floor Furnace
	Forced Heat & Cool
	Heat Pump
	No Heating/Cooling

	Central Air
	Wood Furnace

(12) Electric

150	Amps Service

No./Qual. of Fixtures

	Ex.	X	Ord.		Min

No. of Elec. Outlets

	Many	X	Ave.		Few

(13) Plumbing

	Average Fixture(s)
	3 Fixture Bath
	2 Fixture Bath
	Softener, Auto
	Softener, Manual
	Solar Water Heat
	No Plumbing
	Extra Toilet
	Extra Sink
	Separate Shower
	Ceramic Tile Floor
	Ceramic Tile Wains
	Ceramic Tub Alcove
	Vent Fan

(14) Water/Sewer

	Public Water
	Public Sewer
	Water Well
	1000 Gal Septic
	2000 Gal Septic

Lump Sum Items:

(15) Built-ins

	Appliance Allow.
	Cook Top
	Dishwasher
	Garbage Disposal
	Bath Heater
	Vent Fan
	Hot Tub
	Unvented Hood
	Vented Hood
	Intercom
	Jacuzzi Tub
	Jacuzzi repl.Tub
	Oven
	Microwave
	Standard Range
	Self Clean Range
	Sauna
	Trash Compactor
	Central Vacuum
	Security System

(15) Fireplaces

	Interior 1 Story
	Interior 2 Story
	2nd/Same Stack
	Two Sided
	Exterior 1 Story
	Exterior 2 Story
	Prefab 1 Story
	Prefab 2 Story
	Heat Circulator
	Raised Hearth
	Wood Stove
	Direct-Vented Gas

Class: CD
Effec. Age: 3
Floor Area: 1,064
Total Base New : 139,339 E.C.F.
Total Depr Cost: 135,159 X 1.297
Estimated T.C.V: 175,301

(16) Porches/Decks

Area	Type

(17) Garage

Year Built:
Car Capacity:
Class:
Exterior:
Brick Ven.:
Stone Ven.:
Common Wall:
Foundation:
Finished ?:
Auto. Doors:
Mech. Doors:
Area:
% Good:
Storage Area:
No Conc. Floor:

Bsmnt Garage:

Carport Area:
Roof:

Cost Est. for Res. Bldg: 1 Single Family PLAIN Cls CD Blt 0
(11) Heating System: Forced Air w/ Ducts
Ground Area = 1064 SF Floor Area = 1064 SF.
Phy/Ab.Phy/Func/Econ/Comb. % Good=97/100/100/100/97
Building Areas

Stories	Exterior	Foundation	Size	Cost New	Depr. Cost
1 Story	Siding	Basement	1,064		
			Total:	143,226	138,929

Other Additions/Adjustments
Plumbing

3 Fixture Bath	1	-3,887	-3,770
	Totals:	139,339	135,159

Notes:

ECF (RESIDENTIAL) 1.297 => TCV: 175,301
5% Completed => Est. True Cash Value 2024 =

*** Information herein deemed reliable but not guaranteed***

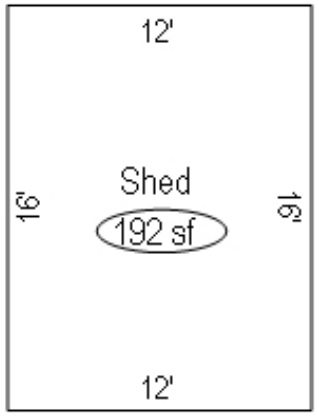

*** Information herein deemed reliable but not guaranteed***

Parcel Number: 2410-25-1202 Jurisdiction: GREENWOOD TWP County: WEXFORD Printed on 02/15/2024

Grantor	Grantee	Sale Price	Sale Date	Inst. Type	Terms of Sale	Liber & Page	Verified By	Prcnt. Trans.
KRUEGER, THOMAS G & AMY J	KRUEGER, THOMAS G , AMY J	1	05/03/2017	LC	21-NOT USED/OTHER	6801/021	DEED	0.0
SAROS, MICHAEL'	KRUEGER, THOMAS G & AMY J	26,000	07/31/2015	LC	03-ARM'S LENGTH	675/2252	DEED	100.0
BRONSON, DAVID & SANDRA	SAROS, MICHAEL	31,000	10/30/2000	WD	03-ARM'S LENGTH	377:20	DEED	0.0
SCOTT, LLOYD E.	BRONSON, DAVID W.	5,000	08/28/1989	WD	03-ARM'S LENGTH	317:175	DEED	0.0

Property Address

5600 E 10 RD

Owner's Name/Address

KRUEGER, THOMAS G , AMY J &
LEVI C KRUEGER
5600 E 10 RD
MANTON MI 49663

Tax Description

COM 584 FT E OF N 1/4-POST; S 193 FT; E 136 FT; N 193 FT; W TO BEG. .6 A. M/L GW. SEC. 25 T24N R10W -MANTON-

Comments/Influences

The Equalizer. Copyright (c) 1999 - 2009. Licensed To: Township of Greenwood, County of Wexford, Michigan

Class: RESIDENTIAL-IMPROV Zoning:

School: MANTON CONSOLIDATED SCHOOLS

P.R.E. 100% 05/03/2017

:

2024 Est TCV 69,238 TCV/TFA: 119.38

Building Permit(s)	Date	Number	Status

X Improved | Vacant

	Public Improvements
	Dirt Road
	Gravel Road
X	Paved Road
	Storm Sewer
	Sidewalk
	Water
	Sewer
X	Electric
	Gas
	Curb
	Street Lights
	Standard Utilities
	Underground Utils.

	Topography of Site
	Level
X	Rolling
	Low
X	High
	Landscaped
	Swamp
X	Wooded
	Pond
	Waterfront
	Ravine
	Wetland
	Flood Plain
X	OPEN

Who	When	What
GLA	05/30/2017	INSPECTION
GLA	06/10/2014	INSPECTION

Land Value Estimates for Land Table 4010.LAND VALUES

Description	Frontage	Depth	* Factors * Front	Depth	Rate	%Adj.	Reason	Value
ACREAGE			0.500 Acres		10,953	100		5,477
ROW			0.100 Acres		0	100		0
			0.60 Total Acres		Total Est. Land Value =			5,477

Year	Land Value	Building Value	Assessed Value	Board of Review	Tribunal/ Other	Taxable Value
2024	2,700	31,900	34,600			22,835C
2023	1,500	26,200	27,700			21,748C
2022	1,300	22,100	23,400			20,713C
2021	1,500	22,600	24,100			20,052C

*** Information herein deemed reliable but not guaranteed***

Building Type

X	Single Family
	Mobile Home
	Town Home
	Duplex
	A-Frame
X	Wood Frame

Building Style: PLAIN

Yr Built	Remodeled
0	0

Condition: Good

Room List

	Basement
	1st Floor
	2nd Floor
	Bedrooms

(1) Exterior

	Wood/Shingle
X	Aluminum/Vinyl
	Brick
X	Insulation

(2) Windows

	Many		Large
X	Avg.	X	Avg.
	Few		Small

	Wood Sash
	Metal Sash
X	Vinyl Sash
	Double Hung
	Horiz. Slide
	Casement
	Double Glass
	Patio Doors
X	Storms & Screens

(3) Roof

X	Gable		Gambrel
	Hip		Mansard
	Flat		Shed

X	Asphalt Shingle

Chimney:

(3) Roof (cont.)

	Eavestrough
X	Insulation
0	Front Overhang
0	Other Overhang

(4) Interior

X	Drywall		Plaster
	Paneled		Wood T&G

Trim & Decoration

	Ex	X	Ord		Min

Size of Closets

	Lg	X	Ord		Small

Doors:		Solid	X	H.C.	

(5) Floors

Kitchen:
Other: Linoleum
Other: Carpeted

(6) Ceilings

X	Drywall

(7) Excavation

Basement: 0 S.F.
Crawl: 580 S.F.
Slab: 0 S.F.
Height to Joists: 0.0

(8) Basement

	Conc. Block
	Poured Conc.
	Stone
	Treated Wood
	Concrete Floor

(9) Basement Finish

	Recreation SF
	Living SF
	Walkout Doors (B)
	No Floor SF
	Walkout Doors (A)

(10) Floor Support

Joists:
Unsupported Len:
Cntr.Sup:

(11) Heating/Cooling

X	Gas		Oil		Elec.
	Wood		Coal		Steam

	Forced Air w/o Ducts
X	Forced Air w/ Ducts
	Forced Hot Water
	Electric Baseboard
	Elec. Ceil. Radiant
	Radiant (in-floor)
	Electric Wall Heat
	Space Heater
	Wall/Floor Furnace
	Forced Heat & Cool
	Heat Pump
	No Heating/Cooling

	Central Air
	Wood Furnace

(12) Electric

150	Amps Service

No./Qual. of Fixtures

	Ex.	X	Ord.		Min

No. of Elec. Outlets

	Many	X	Ave.		Few

(13) Plumbing

	Average Fixture(s)
1	3 Fixture Bath
	2 Fixture Bath
	Softener, Auto
	Softener, Manual
	Solar Water Heat
	No Plumbing
	Extra Toilet
	Extra Sink
	Separate Shower
	Ceramic Tile Floor
	Ceramic Tile Wains
	Ceramic Tub Alcove
	Vent Fan

(14) Water/Sewer

	Public Water
	Public Sewer
1	Water Well
1	1000 Gal Septic
	2000 Gal Septic

Lump Sum Items:

(15) Built-ins

	Appliance Allow.
	Cook Top
	Dishwasher
	Garbage Disposal
	Bath Heater
	Vent Fan
	Hot Tub
	Unvented Hood
	Vented Hood
	Intercom
	Jacuzzi Tub
	Jacuzzi repl.Tub
	Oven
	Microwave
	Standard Range
	Self Clean Range
	Sauna
	Trash Compactor
	Central Vacuum
	Security System

(15) Fireplaces

	Interior 1 Story
	Interior 2 Story
	2nd/Same Stack
	Two Sided
	Exterior 1 Story
	Exterior 2 Story
	Prefab 1 Story
	Prefab 2 Story
	Heat Circulator
	Raised Hearth
	Wood Stove
	Direct-Vented Gas

Class: D
Effec. Age: 49
Floor Area: 580
Total Base New : 96,398 E.C.F.
Total Depr Cost: 49,160 X 1.297
Estimated T.C.V: 63,761

(16) Porches/Decks

Area	Type
284	WCP (1 Story)

(17) Garage

Year Built:
Car Capacity:
Class: D
Exterior: Siding
Brick Ven.: 0
Stone Ven.: 0
Common Wall: Detache
Foundation: 18 Inch
Finished ?:
Auto. Doors: 0
Mech. Doors: 0
Area: 224
% Good: 0
Storage Area: 0
No Conc. Floor: 0

Bsmnt Garage:

Carport Area:
Roof:

Cost Est. for Res. Bldg: 1 Single Family PLAIN Cls D Blt 0
(11) Heating System: Forced Air w/ Ducts
Ground Area = 580 SF Floor Area = 580 SF.
Phy/Ab.Phy/Func/Econ/Comb. % Good=51/100/100/100/51
Building Areas

Stories	Exterior	Foundation	Size	Cost New	Depr. Cost
1 Story	Siding	Crawl Space	580		
			Total:	69,966	35,681
Other Additions/Adjustments					
Water/Sewer					
1000 Gal Septic			1	4,293	2,189
Water Well, 100 Feet			1	5,545	2,828
Porches					
WCP (1 Story)			284	7,748	3,951
Garages					
Class: D Exterior: Siding Foundation: 18 Inch (Unfinished)					
Base Cost			224	8,846	4,511
			Totals:	96,398	49,160

Notes:
ECF (RESIDENTIAL) 1.297 => TCV: 63,761

*** Information herein deemed reliable but not guaranteed***

outhouse nv

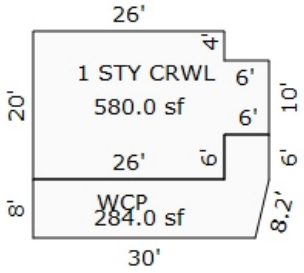

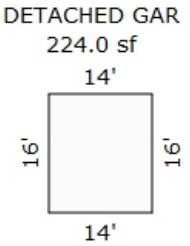

Sketch by Apex Sketch

*** Information herein deemed reliable but not guaranteed***

Parcel Number: 2410-25-1401 Jurisdiction: GREENWOOD TWP County: WEXFORD Printed on 02/15/2024

Grantor	Grantee	Sale Price	Sale Date	Inst. Type	Terms of Sale	Liber & Page	Verified By	Prcnt. Trans.
OOSTVEEN, DONALD J & JO A	HOWEY, ELIZABETH	450,000	07/30/2021	WD	03-ARM'S LENGTH	690/2331	DEED	100.0
OOSTVEEN, DONALD J & JO A	OOSTVEEN, DONALD J & JO A	0	02/04/2013	QC	14-INTO/OUT OF TRUST	656/1170	DEED	0.0
ROBBINS, TIMOTHY S	OOSTVEEN, DONALD	327,000	08/22/2009	WD	03-ARM'S LENGTH	614/53	DEED	0.0
ROBBINS, TIMOTHY S & MELAN	OOSTVEEN, DONALD J & JO A	327,000	08/22/2008	WD	03-ARM'S LENGTH	614/53	DEED	100.0

Property Address

7587 N 37 RD

Owner's Name/Address

HOWEY, ELIZABETH
2161 COUNTY RD 505
BAYFIELD CO 81122

Tax Description

SE 1/4 OF NE 1/4 40 A M/L GW. SEC. 25 T24N R10W -MANTON-

Comments/Influences

Class: RESIDENTIAL-IMPROV Zoning:

School: MANTON CONSOLIDATED SCHOOLS

P.R.E. 100% 09/16/2021

:

2024 Est TCV 628,876 TCV/TFA: 242.25

Building Permit(s)	Date	Number	Status
RESIDENTIAL - NEW	12/08/2004	PM8194	
RESIDENTIAL - NEW	07/15/2004	PM7716	
RESIDENTIAL - NEW	06/28/2004	PE16210	
RESIDENTIAL - NEW	06/24/2004	PP3508	

X	Improved		Vacant

	Public Improvements
	Dirt Road
X	Gravel Road
X	Paved Road
	Storm Sewer
	Sidewalk
	Water
	Sewer
	Electric
	Gas
	Curb
	Street Lights
	Standard Utilities
	Underground Utils.

	Topography of Site
	Level
X	Rolling
	Low
	High
	Landscaped
	Swamp
X	Wooded
	Pond
	Waterfront
	Ravine
	Wetland
	Flood Plain
X	OPEN/PINES

Who	When	What
GLA	07/10/2019	INSPECTION
GLA	05/30/2017	INSPECTION
GLA	08/02/2014	INSPECTION

Land Value Estimates for Land Table 4010.LAND VALUES

Description	Frontage	Depth	* Factors * Front	Depth	Rate	%Adj.	Reason	Value
ACREAGE			39.000 Acres		2,722	100		106,158
ROW			1.000 Acres		0	100		0
			40.00 Total Acres		Total Est. Land Value =			106,158

Land Improvement Cost Estimates

Description	Rate	Size	% Good	Cash Value
D/W/P: 4in Concrete	6.11	1488	66	6,001
D/W/P: 4in Concrete	6.11	574	66	2,315
Fencing: Wire Mesh, #11	3.18	384	76	928
Fencing: Mesh, + for Rails	3.05	48	76	111
Fencing: Gates, Mesh, 3'	358.38	2	76	545
Retaining Wall: Precast,Ret.	15.61	30	76	356
Total Estimated Land Improvements True Cash Value =				10,256

Year	Land Value	Building Value	Assessed Value	Board of Review	Tribunal/ Other	Taxable Value
2024	53,100	261,300	314,400			240,234C
2023	47,000	213,600	260,600			228,795C
2022	37,400	180,500	217,900			217,900S
2021	33,300	182,100	215,400			156,637C

The Equalizer. Copyright (c) 1999 - 2009.
Licensed To: Township of Greenwood, County of Wexford, Michigan

*** Information herein deemed reliable but not guaranteed***

Building Type

X	Single Family
	Mobile Home
	Town Home
	Duplex
	A-Frame
X	Wood Frame

Building Style: TWO STORY

Yr Built	Remodeled
2003	0

Condition: Good

Room List

	Basement
4	1st Floor
5	2nd Floor
3	Bedrooms

(1) Exterior

	Wood/Shingle
	Aluminum/Vinyl
	Brick
X	Vinyl
	Insulation

(2) Windows

X	Many Avg. Few	X	Large Avg. Small

	Wood Sash
	Metal Sash
X	Vinyl Sash
	Double Hung
	Horiz. Slide
	Casement
X	Double Glass
	Patio Doors
X	Storms & Screens

(3) Roof

X	Gable		Gambrel
	Hip		Mansard
	Flat		Shed

X	Asphalt Shingle

Chimney:

(3) Roof (cont.)

	Eavestrough
	Insulation
0	Front Overhang
0	Other Overhang

(4) Interior

X	Drywall		Plaster
	Paneled		Wood T&G

Trim & Decoration

	Ex	X	Ord		Min

Size of Closets

	Lg	X	Ord		Small

Doors:		Solid	X	H.C.	

(5) Floors

Kitchen: Hardwood
Other: Carpeted
Other:

(6) Ceilings

(7) Excavation

Basement: 1378 S.F.
Crawl: 0 S.F.
Slab: 0 S.F.
Height to Joists: 0.0

(8) Basement

	Conc. Block
	Poured Conc.
	Stone
	Treated Wood
	Concrete Floor

(9) Basement Finish

	Recreation	SF
	Living	SF
	Walkout Doors (B)	
	No Floor	SF
	Walkout Doors (A)	

(10) Floor Support

Joists:
Unsupported Len:
Cntr.Sup:

(11) Heating/Cooling

X	Gas		Oil		Elec.
	Wood		Coal		Steam

	Forced Air w/o Ducts
	Forced Air w/ Ducts
	Forced Hot Water
	Electric Baseboard
	Elec. Ceil. Radiant
	Radiant (in-floor)
	Electric Wall Heat
	Space Heater
	Wall/Floor Furnace
X	Forced Heat & Cool
	Heat Pump
	No Heating/Cooling

	Central Air
	Wood Furnace

(12) Electric

0	Amps Service

No./Qual. of Fixtures

	Ex.	X	Ord.		Min

No. of Elec. Outlets

	Many	X	Ave.		Few

(13) Plumbing

	Average Fixture(s)
2	3 Fixture Bath
1	2 Fixture Bath
	Softener, Auto
	Softener, Manual
	Solar Water Heat
	No Plumbing
	Extra Toilet
	Extra Sink
	Separate Shower
	Ceramic Tile Floor
	Ceramic Tile Wains
	Ceramic Tub Alcove
	Vent Fan

(14) Water/Sewer

	Public Water
	Public Sewer
1	Water Well
1	1000 Gal Septic
	2000 Gal Septic

Lump Sum Items:

(15) Built-ins

	Appliance Allow.
	Cook Top
	Dishwasher
	Garbage Disposal
	Bath Heater
	Vent Fan
	Hot Tub
	Unvented Hood
	Vented Hood
	Intercom
	Jacuzzi Tub
	Jacuzzi repl.Tub
	Oven
	Microwave
	Standard Range
	Self Clean Range
	Sauna
	Trash Compactor
	Central Vacuum
	Security System

(15) Fireplaces

	Interior 1 Story
	Interior 2 Story
	2nd/Same Stack
	Two Sided
	Exterior 1 Story
	Exterior 2 Story
	Prefab 1 Story
	Prefab 2 Story
	Heat Circulator
	Raised Hearth
	Wood Stove
	Direct-Vented Gas

Class: C
Effec. Age: 20
Floor Area: 2,596
Total Base New : 495,145 E.C.F.
Total Depr Cost: 395,113 X 1.297
Estimated T.C.V: 512,462

(16) Porches/Decks

Area	Type
614	Treated Wood
600	Treated Wood
240	Treated Wood
128	Brzwy, FW

(17) Garage

Year Built:
Car Capacity:
Class: C
Exterior: Siding
Brick Ven.: 0
Stone Ven.: 0
Common Wall: 1 Wall
Foundation: 42 Inch
Finished ?:
Auto. Doors: 0
Mech. Doors: 0
Area: 784
% Good: 0
Storage Area: 0
No Conc. Floor: 0

Bsmnt Garage:

Carport Area: 480
Roof: Aluminum

Cost Est. for Res. Bldg: 1 Single Family TWO STORY Cls C Blt 2003
(11) Heating System: Forced Heat & Cool
Ground Area = 1378 SF Floor Area = 2596 SF.
Phy/Ab.Phy/Func/Econ/Comb. % Good=80/100/100/100/80
Building Areas

Stories	Exterior	Foundation	Size	Cost New	Depr. Cost
2 Story	Siding	Basement	1,218		
1 Story	Siding	Basement	160		
			Total:	311,628	249,302

Other Additions/Adjustments

Plumbing			
3 Fixture Bath	1	4,678	3,742
2 Fixture Bath	1	3,130	2,504
Water/Sewer			
1000 Gal Septic	1	4,899	3,919
Water Well, 100 Feet	1	5,849	4,679
Deck			
Treated Wood w/Roof (Deck Portion)	614	8,700	6,960
Treated Wood w/Roof (Roof portion)	614	9,382	7,506
Treated Wood w/Roof (Deck Portion)	600	8,568	6,854
Treated Wood w/Roof (Roof portion)	600	9,168	7,334
Treated Wood	240	4,704	3,763
Garages			
Class: C Exterior: Siding Foundation: 42 Inch (Unfinished)			
Base Cost	784	30,929	24,743
Common Wall: 1 Wall	1	-2,705	-2,164
Class: C Exterior: Pole (Unfinished)			
Base Cost	1924	46,753	37,402
Class: D Exterior: Pole (Unfinished)			
Base Cost	1600	30,768	24,614

<<<<< Calculations too long. See Valuation printout for complete pricing. >>>>>

*** Information herein deemed reliable but not guaranteed***

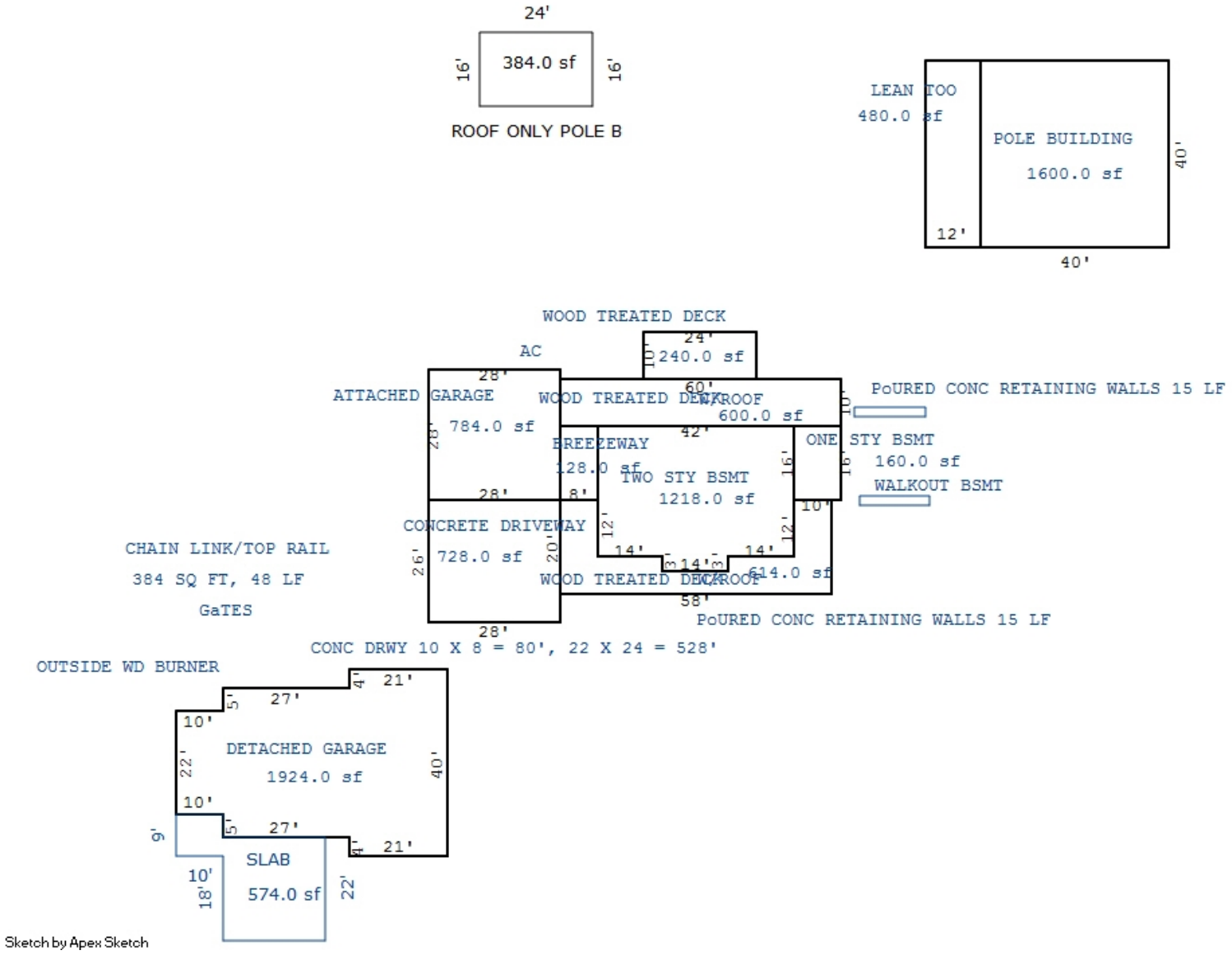

*** Information herein deemed reliable but not guaranteed***

Parcel Number: 2410-25-2101 Jurisdiction: GREENWOOD TWP County: WEXFORD Printed on 02/15/2024

Grantor	Grantee	Sale Price	Sale Date	Inst. Type	Terms of Sale	Liber & Page	Verified By	Prcnt. Trans.
BIGELOW, DAVID		0	01/27/2022	QC	09-FAMILY	692/307	DEED	0.0
RUGINIS, PATRICIA ETAL	BIGELOW, DAVID	0	10/28/2021	QC	09-FAMILY	691/1182	DEED	0.0
ORVILLE, SCOTT ETAL	RUGINIS, PATRICIA & STEPHE	0	02/19/2014	QC	09-FAMILY	665/3002	DEED	0.0

Property Address

5402 E 10 RD

Owner's Name/Address

BIGELOW, DAVID
208 RANDOPH ST
MANTON MI 49663

Tax Description

NE 1/4 OF NW 1/4 EXC W 16 RDS OF N 14 RDS & EXC E 20 FT. --36.A M/L-- GW. SEC. 25 T24N R10W -MANTON- 1/28/15 PORTION COMBINED WITH 2410-25-2102

Comments/Influences

Class: RESIDENTIAL-VACANT Zoning:

School: MANTON CONSOLIDATED SCHOOLS

P.R.E. 0%

:

2024 Est TCV 97,039

Building Permit(s)	Date	Number	Status

	Improved	X	Vacant

	Public Improvements
	Dirt Road
	Gravel Road
X	Paved Road
	Storm Sewer
	Sidewalk
	Water
	Sewer
X	Electric
	Gas
	Curb
	Street Lights
	Standard Utilities
	Underground Utils.

	Topography of Site
	Level
X	Rolling
X	Low
	High
	Landscaped
	Swamp
X	Wooded
	Pond
	Waterfront
	Ravine
	Wetland
	Flood Plain
X	OPEN/PINES

Who	When	What
GLA	07/10/2019	INSPECTION
GLA	05/30/2017	INSPECTION

Land Value Estimates for Land Table 4010.LAND VALUES

Description	Frontage	Depth	* Factors * Front	Depth	Rate	%Adj.	Reason	Value
ACREAGE			35.650 Acres		2,722	100		97,039
ROW			0.750 Acres		0	100		0
			36.40 Total Acres		Total Est. Land Value =			97,039

Year	Land Value	Building Value	Assessed Value	Board of Review	Tribunal/ Other	Taxable Value
2024	48,500	0	48,500			23,017C
2023	43,400	0	43,400			21,921C
2022	35,200	0	35,200			20,878C
2021	31,000	0	31,000			20,212C

The Equalizer. Copyright (c) 1999 - 2009. Licensed To: Township of Greenwood, County of Wexford, Michigan

*** Information herein deemed reliable but not guaranteed***

Parcel Number: 2410-25-2102 Jurisdiction: GREENWOOD TWP County: WEXFORD Printed on 02/15/2024

Grantor	Grantee	Sale Price	Sale Date	Inst. Type	Terms of Sale	Liber & Page	Verified By	Prcnt. Trans.
BIGELOW, DAVID	RUGINIS, PATRICIA ETAL	0	01/27/2022	QC	05-CORRECTING TITLE	692/307	DEED	0.0
RUGINIS, PATRICIA ETAL	BIGELOW, DAVID	0	10/28/2021	QC	09-FAMILY	691/1182	DEED	0.0
SCOTT, STEPHEN A	RUGINIS, PATRICIA	0	01/15/2015	QC	09-FAMILY	673/2194	DEED	0.0
ORVILLE, SCOTT ETAL	RUGINIS, PATRICIA & STEPHE	0	02/19/2014	QC	09-FAMILY	665/3002	DEED	0.0

Property Address

5280 E 10 RD

Owner's Name/Address

RUGINIS, PATRICIA ETAL
208 RANDOPH ST
MANTON MI 49663

Tax Description

W 16 RDS OF N 14 RDS OF E 1/2 OF NW 1/4 --1.35 A.-- GW. SEC. 25 T24N R10W -MANTON- 1/28/15 COMBINED WITH PORTION OF 2410-25-2101

Comments/Influences

Class: RESIDENTIAL-IMPROV Zoning:

School: MANTON CONSOLIDATED SCHOOLS

P.R.E. 100% 01/27/2022

:

2024 Est TCV 136,604 TCV/TFA: 118.58

Building Permit(s)	Date	Number	Status

X Improved | Vacant

	Public Improvements
	Dirt Road
	Gravel Road
X	Paved Road
	Storm Sewer
	Sidewalk
	Water
	Sewer
X	Electric
	Gas
	Curb
	Street Lights
	Standard Utilities
	Underground Utils.

	Topography of Site
	Level
X	Rolling
X	Low
	High
	Landscaped
	Swamp
X	Wooded
	Pond
	Waterfront
	Ravine
	Wetland
	Flood Plain
X	PINES

Who	When	What
GLA	07/10/2019	INSPECTION
GLA	05/30/2017	INSPECTION
GLA	08/02/2014	INSPECTION

Land Value Estimates for Land Table 4010.LAND VALUES

Description	Frontage	Depth	* Factors * Front	Depth	Rate	%Adj.	Reason	Value
ACREAGE			0.800 Acres		10,953	100		8,762
ROW			0.200 Acres		0	100		0
			1.00 Total Acres		Total Est. Land Value =			8,762

Land Improvement Cost Estimates

Description	Rate	Size	% Good	Cash Value
D/W/P: 4in Concrete	7.01	504	45	1,590
Wood Frame	28.20	120	42	1,421
Total Estimated Land Improvements True Cash Value =				3,011

Year	Land Value	Building Value	Assessed Value	Board of Review	Tribunal/ Other	Taxable Value
2024	4,400	63,900	68,300			39,399C
2023	2,400	52,700	55,100			37,523C
2022	2,000	44,800	46,800			35,737C
2021	2,400	45,500	47,900			34,596C

The Equalizer. Copyright (c) 1999 - 2009.
Licensed To: Township of Greenwood, County of Wexford, Michigan

*** Information herein deemed reliable but not guaranteed***

Building Type

X	Single Family
	Mobile Home
	Town Home
	Duplex
	A-Frame
X	Wood Frame

Building Style: PLAIN

Yr Built	Remodeled
0	0

Condition: Good

Room List

	Basement
	1st Floor
	2nd Floor
	Bedrooms

(1) Exterior

	Wood/Shingle
X	Aluminum/Vinyl
	Brick
X	Insulation

(2) Windows

	Many		Large
X	Avg.	X	Avg.
	Few		Small

	Wood Sash
	Metal Sash
X	Vinyl Sash
	Double Hung
	Horiz. Slide
	Casement
	Double Glass
	Patio Doors
X	Storms & Screens

(3) Roof

X	Gable		Gambrel
	Hip		Mansard
	Flat		Shed

X	Asphalt Shingle

Chimney:

(3) Roof (cont.)

	Eavestrough
X	Insulation
0	Front Overhang
0	Other Overhang

(4) Interior

X	Drywall		Plaster
	Paneled		Wood T&G

Trim & Decoration

	Ex	X	Ord		Min

Size of Closets

	Lg	X	Ord		Small

Doors:		Solid	X	H.C.	

(5) Floors

Kitchen:
Other: Linoleum
Other: Carpeted

(6) Ceilings

X	Drywall		

(7) Excavation

Basement: 0 S.F.
Crawl: 1152 S.F.
Slab: 0 S.F.
Height to Joists: 0.0

(8) Basement

	Conc. Block
	Poured Conc.
	Stone
	Treated Wood
	Concrete Floor

(9) Basement Finish

	Recreation SF
	Living SF
	Walkout Doors (B)
	No Floor SF
	Walkout Doors (A)

(10) Floor Support

Joists:
Unsupported Len:
Cntr.Sup:

(11) Heating/Cooling

X	Gas		Oil		Elec.
	Wood		Coal		Steam

	Forced Air w/o Ducts
X	Forced Air w/ Ducts
	Forced Hot Water
	Electric Baseboard
	Elec. Ceil. Radiant
	Radiant (in-floor)
	Electric Wall Heat
	Space Heater
	Wall/Floor Furnace
	Forced Heat & Cool
	Heat Pump
	No Heating/Cooling

X	Central Air
	Wood Furnace

(12) Electric

150	Amps Service

No./Qual. of Fixtures

	Ex.	X	Ord.		Min

No. of Elec. Outlets

	Many	X	Ave.		Few

(13) Plumbing

	Average Fixture(s)
1	3 Fixture Bath
	2 Fixture Bath
	Softener, Auto
	Softener, Manual
	Solar Water Heat
	No Plumbing
	Extra Toilet
	Extra Sink
	Separate Shower
	Ceramic Tile Floor
	Ceramic Tile Wains
	Ceramic Tub Alcove
	Vent Fan

(14) Water/Sewer

	Public Water
	Public Sewer
1	Water Well
1	1000 Gal Septic
	2000 Gal Septic

Lump Sum Items:

(15) Built-ins

	Appliance Allow.
	Cook Top
	Dishwasher
	Garbage Disposal
	Bath Heater
	Vent Fan
	Hot Tub
	Unvented Hood
	Vented Hood
	Intercom
	Jacuzzi Tub
	Jacuzzi repl.Tub
	Oven
	Microwave
	Standard Range
	Self Clean Range
	Sauna
	Trash Compactor
	Central Vacuum
	Security System

(15) Fireplaces

	Interior 1 Story
	Interior 2 Story
	2nd/Same Stack
	Two Sided
	Exterior 1 Story
	Exterior 2 Story
	Prefab 1 Story
	Prefab 2 Story
	Heat Circulator
	Raised Hearth
	Wood Stove
	Direct-Vented Gas

Class: CD
Effec. Age: 49
Floor Area: 1,152
Total Base New : 188,713 E.C.F.
Total Depr Cost: 96,246 X 1.297
Estimated T.C.V: 124,831

(16) Porches/Decks

Area	Type
112	WPP
36	CPP
144	CPP
63	Treated Wood

(17) Garage

Year Built:
Car Capacity:
Class: CD
Exterior: Siding
Brick Ven.: 0
Stone Ven.: 0
Common Wall: Detache
Foundation: 18 Inch
Finished ?:
Auto. Doors: 0
Mech. Doors: 0
Area: 864
% Good: 0
Storage Area: 0
No Conc. Floor: 0

Bsmnt Garage:

Carport Area:
Roof:

Cost Est. for Res. Bldg: 1 Single Family PLAIN Cls CD Blt 0
(11) Heating System: Forced Air w/ Ducts , Air Conditioning
Ground Area = 1152 SF Floor Area = 1152 SF.
Phy/Ab.Phy/Func/Econ/Comb. % Good=51/100/100/100/51
Building Areas

Stories	Exterior	Foundation	Size	Cost New	Depr. Cost
1 Story	Siding	Crawl Space	1,152		
			Total:	143,419	73,145
Other Additions/Adjustments					
Water/Sewer					
1000 Gal Septic			1	4,582	2,337
Water Well, 100 Feet			1	5,680	2,897
Porches					
WPP			112	2,821	1,439
CPP			36	908	463
CPP			144	2,506	1,278
Deck					
Treated Wood			63	1,978	1,009
Garages					
Class: CD Exterior: Siding Foundation: 18 Inch (Unfinished)					
Base Cost			864	26,819	13,678
			Totals:	188,713	96,246

Notes:

ECF (RESIDENTIAL) 1.297 => TCV: 124,831

*** Information herein deemed reliable but not guaranteed***

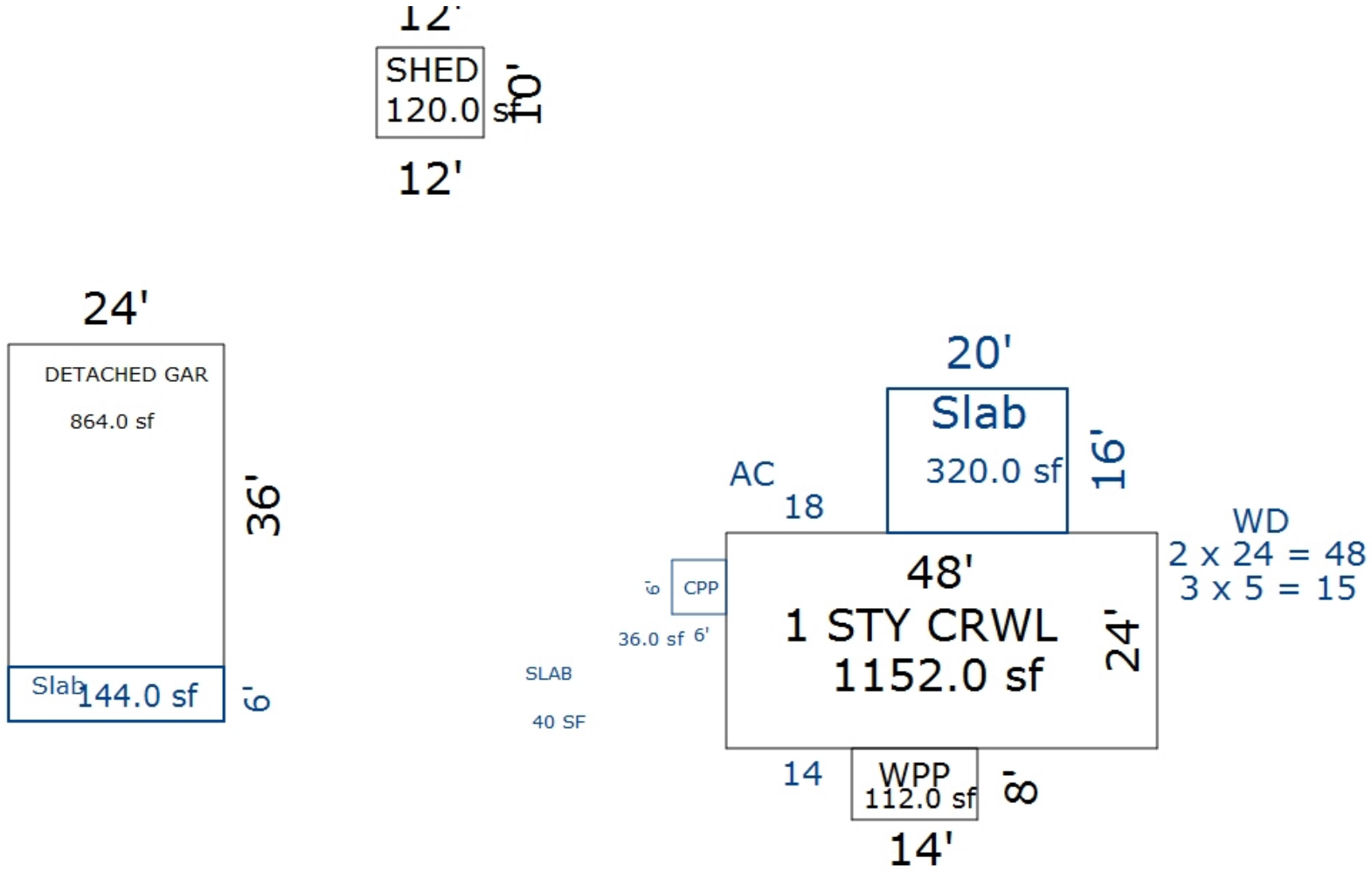

Sketch by Apex Sketch

*** Information herein deemed reliable but not guaranteed***

Parcel Number: 2410-25-2201 Jurisdiction: GREENWOOD TWP County: WEXFORD Printed on 02/15/2024

Grantor	Grantee	Sale Price	Sale Date	Inst. Type	Terms of Sale	Liber & Page	Verified By	Prcnt. Trans.
WHITE, DONNA JEAN	BIGELOW, WAYNE E.	1,250	06/07/1991	WD	03-ARM'S LENGTH	326:486	DEED	0.0

Property Address

5182 E 10 RD

Owner's Name/Address

BIGELOW, WAYNE E.
& ANN A.
5182 E 10 RD
MANTON MI 49663

Tax Description

E 1/2 OF NW 1/4 OF NW 1/4 EXC W 208.75 FT OF N 428 FT. --17 A M/L-- GW. SEC. 25 T24N R10W -MANTON-

Comments/Influences

Class: RESIDENTIAL-IMPROV Zoning:

School: MANTON CONSOLIDATED SCHOOLS

P.R.E. 100% / /

:

2024 Est TCV 158,583 TCV/TFA: 153.37

Building Permit(s)	Date	Number	Status
RESIDENTIAL - NEW	05/25/2005	PE16862	
RESIDENTIAL - REMODEL	07/26/1999	PE12262	

X Improved | Vacant

	Public Improvements
	Dirt Road
	Gravel Road
X	Paved Road
	Storm Sewer
	Sidewalk
	Water
	Sewer
	Electric
	Gas
	Curb
	Street Lights
	Standard Utilities
	Underground Utils.

	Topography of Site
	Level
X	Rolling
	Low
X	High
	Landscaped
	Swamp
X	Wooded
	Pond
	Waterfront
	Ravine
	Wetland
	Flood Plain
X	OPEN/PINES

Who	When	What
GLA	07/10/2019	INSPECTION
GLA	05/30/2017	INSPECTION
GLA	03/22/2015	INSPECTION

Land Value Estimates for Land Table 4010.LAND VALUES

Description	Frontage	Depth	* Factors * Front	Depth	Rate	%Adj.	Reason	Value
ACREAGE			16.670 Acres		3,200	100		53,344
ROW			0.330 Acres		0	100		0
			17.00 Total Acres		Total Est. Land Value =			53,344

Land Improvement Cost Estimates

Description	Rate	Size	% Good	Cash Value
D/W/P: 4in Concrete	7.01	528	42	1,554
D/W/P: 4in Concrete	7.01	168	42	495
D/W/P: 4in Concrete	7.01	32	42	94
Total Estimated Land Improvements True Cash Value =				2,143

Year	Land Value	Building Value	Assessed Value	Board of Review	Tribunal/ Other	Taxable Value
2024	26,700	52,600	79,300			44,264C
2023	21,700	42,500	64,200			42,157C
2022	18,800	35,600	54,400			40,150C
2021	18,700	30,500	49,200			38,868C

The Equalizer. Copyright (c) 1999 - 2009.
Licensed To: Township of Greenwood, County of Wexford, Michigan

*** Information herein deemed reliable but not guaranteed***

Building Type

	Single Family
X	Mobile Home
	Town Home
	Duplex
	A-Frame

X	Wood Frame

Building Style: SWT/DWT

Yr Built	Remodeled
0	0

Condition: Good

Room List

	Basement
	1st Floor
	2nd Floor
	Bedrooms

(1) Exterior

	Wood/Shingle
	Aluminum/Vinyl
X	Brick
X	Insulation

(2) Windows

	Many		Large
X	Avg.	X	Avg.
	Few		Small

	Wood Sash
	Metal Sash
X	Vinyl Sash
	Double Hung
	Horiz. Slide
	Casement
	Double Glass
	Patio Doors
X	Storms & Screens

(3) Roof

X	Gable		Gambrel
	Hip		Mansard
	Flat		Shed

X	Asphalt Shingle

Chimney:

(3) Roof (cont.)

	Eavestrough
X	Insulation
0	Front Overhang
0	Other Overhang

(4) Interior

X	Drywall		Plaster
	Paneled		Wood T&G

Trim & Decoration

	Ex	X	Ord		Min

Size of Closets

	Lg	X	Ord		Small

Doors:		Solid	X	H.C.	

(5) Floors

Kitchen:
Other: Linoleum
Other: Carpeted

(6) Ceilings

X	Drywall		

(7) Excavation

Basement: 0 S.F.
Crawl: 0 S.F.
Slab: 0 S.F.
Height to Joists: 0.0

(8) Basement

	Conc. Block
	Poured Conc.
	Stone
	Treated Wood
	Concrete Floor

(9) Basement Finish

	Recreation SF
	Living SF
	Walkout Doors (B)
	No Floor SF
	Walkout Doors (A)

(10) Floor Support

Joists:
Unsupported Len:
Cntr.Sup:

(11) Heating/Cooling

X	Gas		Oil		Elec.
	Wood		Coal		Steam

X	Forced Warm Air
	Wall Furnace
	Warm & Cool Air
	Heat Pump

	Central Air
	Wood Furnace

(12) Electric

150	Amps Service

No./Qual. of Fixtures

	Ex.	X	Ord.		Min

No. of Elec. Outlets

	Many	X	Ave.		Few

(13) Plumbing

	Average Fixture(s)
1	3 Fixture Bath
	2 Fixture Bath
	Softener, Auto
	Softener, Manual
	Solar Water Heat
	No Plumbing
	Extra Toilet
	Extra Sink
	Separate Shower
	Ceramic Tile Floor
	Ceramic Tile Wains
	Ceramic Tub Alcove
	Vent Fan

(14) Water/Sewer

	Public Water
	Public Sewer
1	Water Well
1	1000 Gal Septic
	2000 Gal Septic

Lump Sum Items:
487

(15) Built-ins

	Appliance Allow.
	Cook Top
	Dishwasher
	Garbage Disposal
	Bath Heater
	Vent Fan
	Hot Tub
	Unvented Hood
	Vented Hood
	Intercom
	Jacuzzi Tub
	Jacuzzi repl.Tub
	Oven
	Microwave
	Standard Range
	Self Clean Range
	Sauna
	Trash Compactor
	Central Vacuum
	Security System

(15) Fireplaces

	Interior 1 Story
	Interior 2 Story
	2nd/Same Stack
	Two Sided
	Exterior 1 Story
	Exterior 2 Story
	Prefab 1 Story
	Prefab 2 Story
	Heat Circulator
	Raised Hearth
	Wood Stove
	Direct-Vented Gas

Class: Fair
Effec. Age: 20
Floor Area:
Total Base New : 172,801 E.C.F.
Total Depr Cost: 79,488 X 1.297
Estimated T.C.V: 103,096

(16) Porches/Decks

Area	Type

(17) Garage

Year Built:
Car Capacity:
Class: CD
Exterior: Siding
Brick Ven.: 0
Stone Ven.: 0
Common Wall: Detache
Foundation: 42 Inch
Finished ?:
Auto. Doors: 0
Mech. Doors: 0
Area: 1200
% Good: 0
Storage Area: 0
No Conc. Floor: 0

Bsmnt Garage:

Carport Area:
Roof:

Cost Est. for Res. Bldg: 1 Mobile Home SWT/DWT Cls Fair Blt 0
(11) Heating System: Wall Furnace
Ground Area = 1034 SF Floor Area = 1034 SF.
Phy/Ab.Phy/Func/Econ/Comb. % Good=46/100/100/100/46
Building Areas

Type	Ext. Walls	Roof/Fnd.	Size	Cost New	Depr. Cost
Main Home	Siding	Comp.Shingle	1034		
			Total:	67,386	30,997
Other Additions/Adjustments					
42" frost-free footings, foundation			138	7,702	3,543
Water/Sewer					
1000 Gal Septic			1	4,582	2,108
Water Well, 100 Feet			1	5,680	2,613
Garages					
Class: CD Exterior: Siding Foundation: 42 Inch (Unfinished)					
Base Cost			1200	38,700	17,802
Class: D Exterior: Siding Foundation: 42 Inch (Unfinished)					
Base Cost			1088	31,269	14,384
No Concrete Floor			1088	-6,104	-2,808
Class: D Exterior: Pole (Unfinished)					
Base Cost			1536	29,537	13,587
No Concrete Floor			1536	-8,617	-3,964
Lump Sum Items					
SHED				1,166	536
GENERATOR				1,500	690
			Totals:	172,801	79,488

Notes:
ECF (RESIDENTIAL) 1.297 => TCV: 103,096

*** Information herein deemed reliable but not guaranteed***

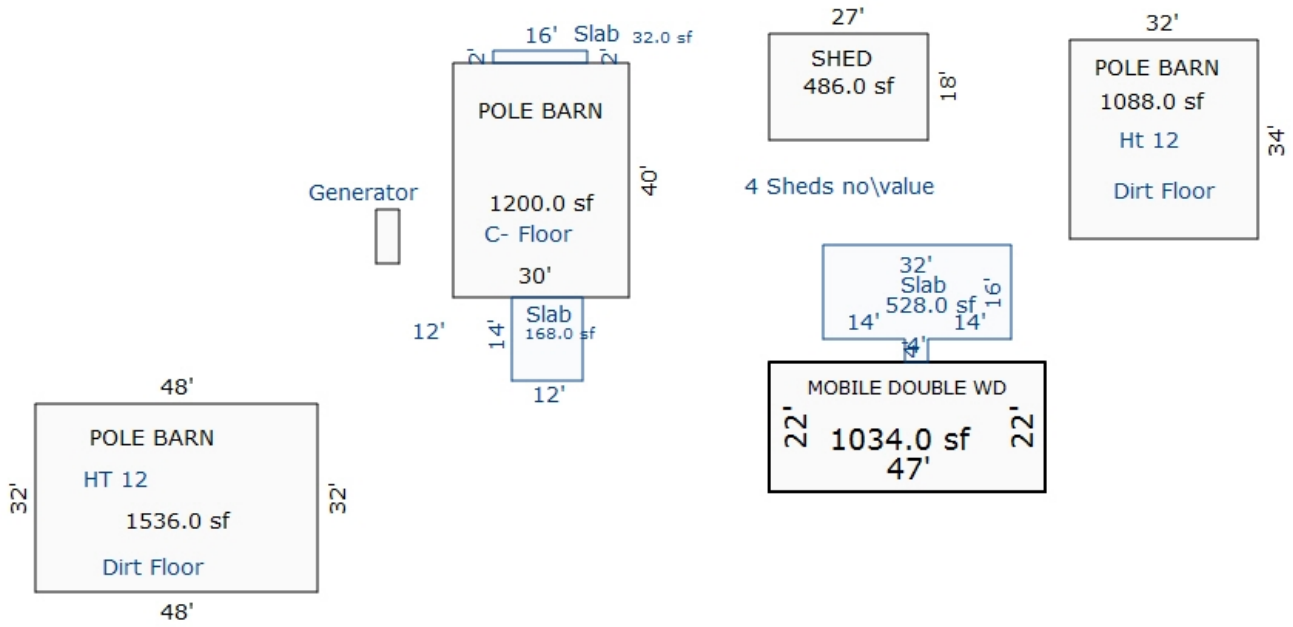

Sketch by Apex Sketch

*** Information herein deemed reliable but not guaranteed***

Parcel Number: 2410-25-2204 Jurisdiction: GREENWOOD TWP County: WEXFORD Printed on 02/15/2024

Grantor	Grantee	Sale Price	Sale Date	Inst. Type	Terms of Sale	Liber & Page	Verified By	Prcnt. Trans.

Property Address	Class: RESIDENTIAL-IMPROV	Zoning:	Building Permit(s)	Date	Number	Status
	School: MANTON CONSOLIDATED SCHOOLS					
Owner's Name/Address	P.R.E. 100% / /					
	:					
SCOTT, STEPHEN C. 5130 E 10 RD MANTON MI 49663	2024 Est TCV 34,298 TCV/TFA: 0.00					

X Improved | Vacant

Land Value Estimates for Land Table 4010.LAND VALUES

Description	Frontage	Depth	* Factors * Front	Depth	Rate	%Adj.	Reason	Value
ACREAGE			0.850 Acres		10,953	100		9,310
ROW			0.150 Acres		0	100		0
			1.00 Total Acres		Total Est. Land Value =			9,310

Tax Description

W 208.75 FT OF N 208.75 FT OF E 1/2 OF NW 1/4 OF NW 1/4 --1 A.-- GW. SEC. 25 T24N R10W -MANTON-

Comments/Influences

Public Improvements

	Dirt Road
	Gravel Road
X	Paved Road
	Storm Sewer
	Sidewalk
	Water
	Sewer
	Electric
	Gas
	Curb
	Street Lights
	Standard Utilities
	Underground Utils.

Topography of Site

	Level
X	Rolling
X	Low
X	High
	Landscaped
X	Swamp
X	Wooded
	Pond
	Waterfront
	Ravine
	Wetland
	Flood Plain
X	PINES

Who	When	What
GLA	07/10/2019	INSPECTION
GLA	05/30/2017	INSPECTION

Year	Land Value	Building Value	Assessed Value	Board of Review	Tribunal/ Other	Taxable Value
2024	4,700	12,400	17,100			11,315C
2023	2,600	10,000	12,600			10,777C
2022	2,100	8,400	10,500			10,264C
2021	2,600	8,300	10,900			9,937C

The Equalizer. Copyright (c) 1999 - 2009.
Licensed To: Township of Greenwood, County of Wexford, Michigan

*** Information herein deemed reliable but not guaranteed***

Building Type

X	Single Family
	Mobile Home
	Town Home
	Duplex
	A-Frame
X	Wood Frame

Building Style: PLAIN

Yr Built	Remodeled
0	0

Condition: Good

Room List

	Basement
	1st Floor
	2nd Floor
	Bedrooms

(1) Exterior

X	Wood/Shingle
	Aluminum/Vinyl
	Brick
X	Insulation

(2) Windows

X	Many Avg. Few	X	Large Avg. Small

	Wood Sash
	Metal Sash
X	Vinyl Sash
	Double Hung
	Horiz. Slide
	Casement
	Double Glass
	Patio Doors
X	Storms & Screens

(3) Roof

X	Gable		Gambrel
	Hip		Mansard
	Flat		Shed

X	Asphalt Shingle

Chimney:

(3) Roof (cont.)

	Eavestrough
X	Insulation
0	Front Overhang
0	Other Overhang

(4) Interior

X	Drywall Paneled		Plaster Wood T&G

Trim & Decoration

	Ex	X	Ord		Min

Size of Closets

	Lg	X	Ord		Small

Doors: | | Solid | X | H.C.

(5) Floors

Kitchen:
Other: Linoleum
Other: Carpeted

(6) Ceilings

X	Drywall

(7) Excavation

Basement: 0 S.F.
Crawl: 0 S.F.
Slab: 0 S.F.
Height to Joists: 0.0

(8) Basement

	Conc. Block
	Poured Conc.
	Stone
	Treated Wood
	Concrete Floor

(9) Basement Finish

	Recreation SF
	Living SF
	Walkout Doors (B)
	No Floor SF
	Walkout Doors (A)

(10) Floor Support

Joists:
Unsupported Len:
Cntr.Sup:

(11) Heating/Cooling

X	Gas Wood		Oil Coal		Elec. Steam

	Forced Air w/o Ducts
X	Forced Air w/ Ducts
	Forced Hot Water
	Electric Baseboard
	Elec. Ceil. Radiant
	Radiant (in-floor)
	Electric Wall Heat
	Space Heater
	Wall/Floor Furnace
	Forced Heat & Cool
	Heat Pump
	No Heating/Cooling
	Central Air
	Wood Furnace

(12) Electric

150	Amps Service

No./Qual. of Fixtures

	Ex.	X	Ord.		Min

No. of Elec. Outlets

	Many	X	Ave.		Few

(13) Plumbing

1	Average Fixture(s)
	3 Fixture Bath
	2 Fixture Bath
	Softener, Auto
	Softener, Manual
	Solar Water Heat
	No Plumbing
	Extra Toilet
	Extra Sink
	Separate Shower
	Ceramic Tile Floor
	Ceramic Tile Wains
	Ceramic Tub Alcove
	Vent Fan

(14) Water/Sewer

	Public Water
	Public Sewer
	Water Well
	1000 Gal Septic
	2000 Gal Septic

Lump Sum Items:

(15) Built-ins

	Appliance Allow.
	Cook Top
	Dishwasher
	Garbage Disposal
	Bath Heater
	Vent Fan
	Hot Tub
	Unvented Hood
	Vented Hood
	Intercom
	Jacuzzi Tub
	Jacuzzi repl.Tub
	Oven
	Microwave
	Standard Range
	Self Clean Range
	Sauna
	Trash Compactor
	Central Vacuum
	Security System

(15) Fireplaces

	Interior 1 Story
	Interior 2 Story
	2nd/Same Stack
	Two Sided
	Exterior 1 Story
	Exterior 2 Story
	Prefab 1 Story
	Prefab 2 Story
	Heat Circulator
	Raised Hearth
	Wood Stove
	Direct-Vented Gas

Class: CD
Effec. Age: 60
Floor Area: 0
Total Base New : 61,160 E.C.F.
Total Depr Cost: 19,266 X 1.297
Estimated T.C.V: 24,988

(16) Porches/Decks

Area	Type
90	CCP (1 Story)

(17) Garage

Year Built:
Car Capacity:
Class: CD
Exterior: Pole
Brick Ven.: 0
Stone Ven.: 0
Common Wall: Detache
Foundation: 18 Inch
Finished ?:
Auto. Doors: 0
Mech. Doors: 0
Area: 2288
% Good: 0
Storage Area: 0
No Conc. Floor: 0

Bsmnt Garage:

Carport Area:
Roof:

Cost Est. for Res. Bldg: 1 Single Family PLAIN Cls CD Blt 0
(11) Heating System: Forced Air w/ Ducts
Ground Area = 0 SF Floor Area = 0 SF.
Phy/Ab.Phy/Func/Econ/Comb. % Good=45/70/100/100/31.5
Building Areas

Stories Exterior Foundation	Size	Cost New	Depr. Cost
Other Additions/Adjustments			
Porches			
CCP (1 Story)	90	2,362	744
Garages			
Class: CD Exterior: Pole (Unfinished)			
Base Cost	2288	49,764	15,676
Class: CD Exterior: Siding Foundation: 18 Inch (Unfinished)			
Base Cost	200	9,034	2,846
Totals:		61,160	19,266

Notes:
ECF (RESIDENTIAL) 1.297 => TCV: 24,988

*** Information herein deemed reliable but not guaranteed***

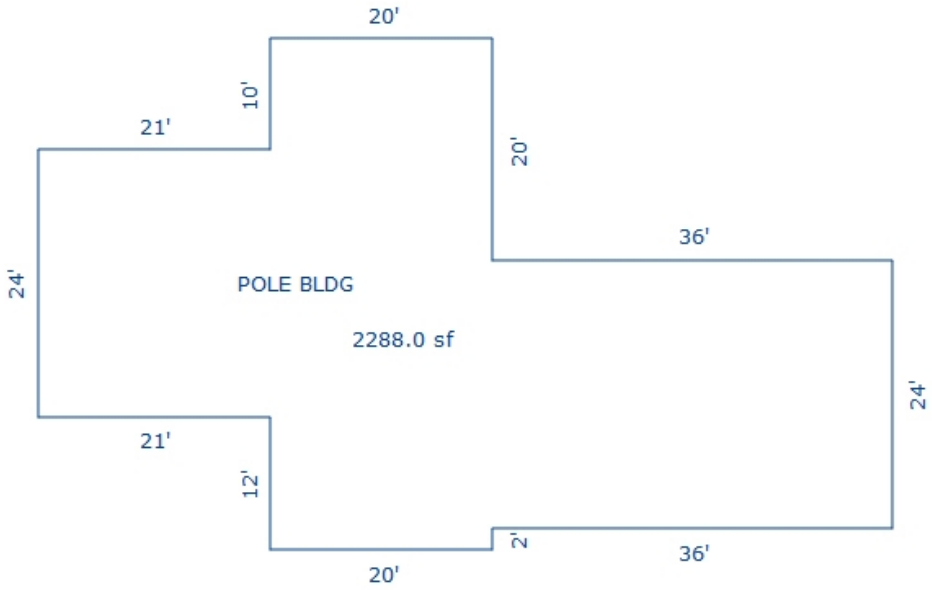

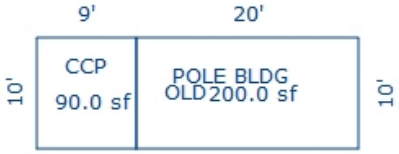

Sketch by Apex Sketch

*** Information herein deemed reliable but not guaranteed***

Parcel Number: 2410-25-2205 Jurisdiction: GREENWOOD TWP County: WEXFORD Printed on 02/15/2024

Grantor	Grantee	Sale Price	Sale Date	Inst. Type	Terms of Sale	Liber & Page	Verified By	Prcnt. Trans.

Property Address

5130 E 10 RD

Owner's Name/Address

SCOTT, STEPHEN C.
5130 E 10 RD
MANTON MI 49663

Tax Description

THAT PART OF E 1/2 OF NW 1/4 OF NW 1/4 DES AS COM 208.75 FT S OF NW COR; E 208.75 FT; S 219.25 FT; W 208.75 FT; N TO POB. & E 1/2 OF W 1/2 OF NW 1/4 OF NW 1/4 --10.59 A M/L-- GW. SEC. 25 T24N R10W -MANTON-

Comments/Influences

The Equalizer. Copyright (c) 1999 - 2009. Licensed To: Township of Greenwood, County of Wexford, Michigan

Class: RESIDENTIAL-IMPROV Zoning:

School: MANTON CONSOLIDATED SCHOOLS

P.R.E. 100% / /

:

2024 Est TCV 196,570 TCV/TFA: 106.37

Building Permit(s)	Date	Number	Status
Manufactured home	06/19/2017	PB17-0103	ENTERED
DEMOLITION	06/13/2017	PB17-0097	ENTERED

X Improved | Vacant

	Public Improvements
	Dirt Road
	Gravel Road
X	Paved Road
	Storm Sewer
	Sidewalk
	Water
	Sewer
X	Electric
	Gas
	Curb
	Street Lights
	Standard Utilities
	Underground Utils.

	Topography of Site
	Level
X	Rolling
	Low
	High
	Landscaped
	Swamp
X	Wooded
	Pond
	Waterfront
	Ravine
	Wetland
	Flood Plain
X	OPEN/PINES

Who	When	What
GLA	07/10/2019	INSPECTION
GLA	05/30/2017	INSPECTION
GLA	03/22/2015	INSPECTION

Land Value Estimates for Land Table 4010.LAND VALUES

Description	Frontage	Depth	* Factors * Front	Depth	Rate	%Adj.	Reason	Value
ACREAGE			10.350 Acres		4,489	100		46,466
ROW			0.240 Acres		0	100		0
			10.59 Total Acres		Total Est. Land Value =			46,466

Year	Land Value	Building Value	Assessed Value	Board of Review	Tribunal/ Other	Taxable Value
2024	23,200	75,100	98,300			24,630C
2023	13,500	60,400	73,900			23,458C
2022	12,400	50,300	62,700			22,341C
2021	12,400	50,200	62,600			21,628C

*** Information herein deemed reliable but not guaranteed***

Building Type

X	Single Family
	Mobile Home
	Town Home
	Duplex
	A-Frame
X	Wood Frame

Building Style: PLAIN

Yr Built	Remodeled
0	0

Condition: Good

Room List

	Basement
	1st Floor
	2nd Floor
	Bedrooms

(1) Exterior

	Wood/Shingle
X	Aluminum/Vinyl
	Brick
X	Insulation

(2) Windows

	Many		Large
X	Avg.	X	Avg.
	Few		Small

	Wood Sash
	Metal Sash
X	Vinyl Sash
	Double Hung
	Horiz. Slide
	Casement
	Double Glass
	Patio Doors
X	Storms & Screens

(3) Roof

X	Gable		Gambrel
	Hip		Mansard
	Flat		Shed

X	Asphalt Shingle

Chimney:

(3) Roof (cont.)

	Eavestrough
X	Insulation
0	Front Overhang
0	Other Overhang

(4) Interior

X	Drywall		Plaster
	Paneled		Wood T&G

Trim & Decoration

	Ex	X	Ord		Min

Size of Closets

	Lg	X	Ord		Small

Doors:		Solid	X	H.C.	

(5) Floors

Kitchen:
Other: Linoleum
Other: Carpeted

(6) Ceilings

X	Drywall

(7) Excavation

Basement: 0 S.F.
Crawl: 1848 S.F.
Slab: 0 S.F.
Height to Joists: 0.0

(8) Basement

	Conc. Block
	Poured Conc.
	Stone
	Treated Wood
	Concrete Floor

(9) Basement Finish

	Recreation SF
	Living SF
	Walkout Doors (B)
	No Floor SF
	Walkout Doors (A)

(10) Floor Support

Joists:
Unsupported Len:
Cntr.Sup:

(11) Heating/Cooling

X	Gas		Oil		Elec.
	Wood		Coal		Steam

	Forced Air w/o Ducts
X	Forced Air w/ Ducts
	Forced Hot Water
	Electric Baseboard
	Elec. Ceil. Radiant
	Radiant (in-floor)
	Electric Wall Heat
	Space Heater
	Wall/Floor Furnace
	Forced Heat & Cool
	Heat Pump
	No Heating/Cooling

X	Central Air
	Wood Furnace

(12) Electric

150	Amps Service

No./Qual. of Fixtures

	Ex.	X	Ord.		Min

No. of Elec. Outlets

	Many	X	Ave.		Few

(13) Plumbing

	Average Fixture(s)
1	3 Fixture Bath
	2 Fixture Bath
	Softener, Auto
	Softener, Manual
	Solar Water Heat
	No Plumbing
	Extra Toilet
	Extra Sink
	Separate Shower
	Ceramic Tile Floor
	Ceramic Tile Wains
	Ceramic Tub Alcove
	Vent Fan

(14) Water/Sewer

	Public Water
	Public Sewer
1	Water Well
1	1000 Gal Septic
	2000 Gal Septic

Lump Sum Items:

(15) Built-ins

	Appliance Allow.
	Cook Top
	Dishwasher
	Garbage Disposal
	Bath Heater
	Vent Fan
	Hot Tub
	Unvented Hood
	Vented Hood
	Intercom
	Jacuzzi Tub
	Jacuzzi repl.Tub
	Oven
	Microwave
	Standard Range
	Self Clean Range
	Sauna
	Trash Compactor
	Central Vacuum
	Security System

(15) Fireplaces

	Interior 1 Story
	Interior 2 Story
	2nd/Same Stack
	Two Sided
	Exterior 1 Story
	Exterior 2 Story
	Prefab 1 Story
	Prefab 2 Story
	Heat Circulator
	Raised Hearth
	Wood Stove
	Direct-Vented Gas

Class: CD
Effec. Age: 64
Floor Area: 1,848
Total Base New : 257,183 E.C.F.
Total Depr Cost: 115,732 X 1.297
Estimated T.C.V: 150,104

(16) Porches/Decks

Area	Type
48	WPP

(17) Garage

Year Built:
Car Capacity:
Class: D
Exterior: Siding
Brick Ven.: 0
Stone Ven.: 0
Common Wall: Detache
Foundation: 42 Inch
Finished ?:
Auto. Doors: 0
Mech. Doors: 0
Area: 960
% Good: 0
Storage Area: 0
No Conc. Floor: 0

Bsmnt Garage:

Carport Area:
Roof:

Cost Est. for Res. Bldg: 1 Single Family PLAIN Cls CD Blt 0
(11) Heating System: Forced Air w/ Ducts , Air Conditioning
Ground Area = 1848 SF Floor Area = 1848 SF.
Phy/Ab.Phy/Func/Econ/Comb. % Good=45/100/100/100/45
Building Areas

Stories	Exterior	Foundation	Size	Cost New	Depr. Cost
1 Story	Siding	Crawl Space	1,848		
			Total:	216,139	97,262
Other Additions/Adjustments					
Water/Sewer					
1000 Gal Septic			1	4,582	2,062
Water Well, 100 Feet			1	5,680	2,556
Porches					
WPP			48	1,838	827
Garages					
Class: D Exterior: Siding Foundation: 42 Inch (Unfinished)					
Base Cost			960	28,944	13,025
			Totals:	257,183	115,732

Notes:
ECF (RESIDENTIAL) 1.297 => TCV: 150,104

*** Information herein deemed reliable but not guaranteed***

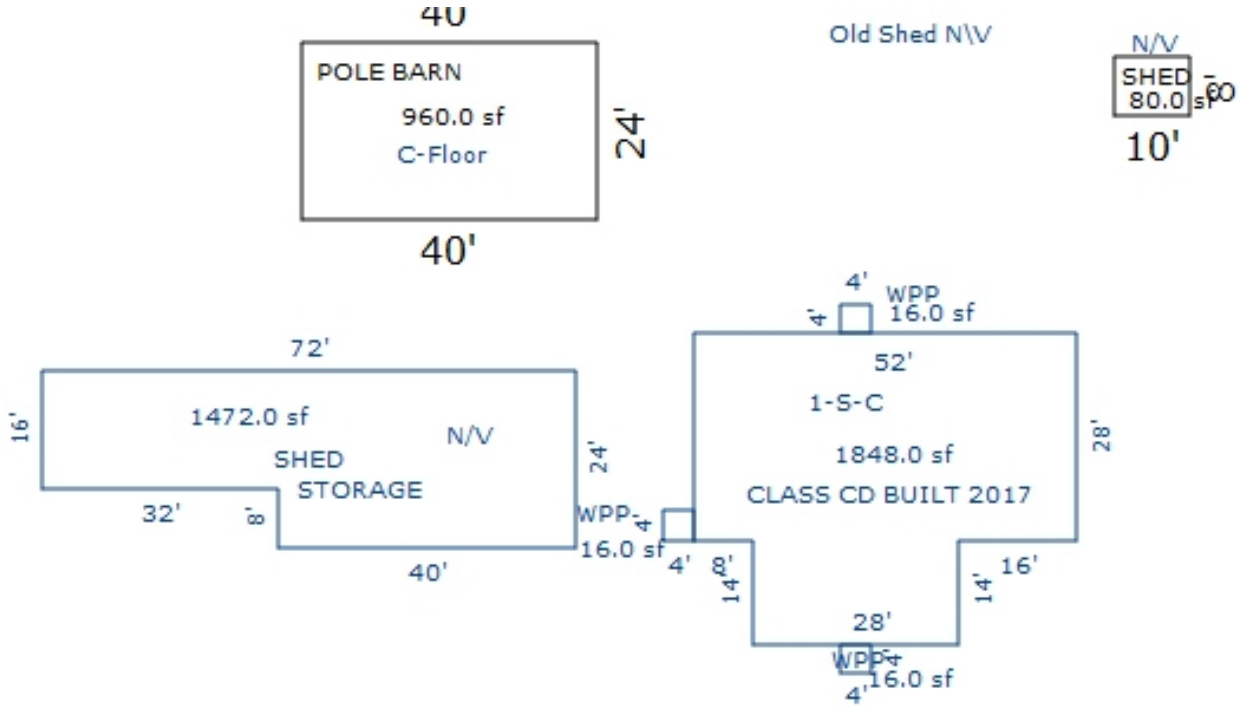

Sketch by Apex Sketch

*** Information herein deemed reliable but not guaranteed***

Parcel Number: 2410-25-2207 Jurisdiction: GREENWOOD TWP County: WEXFORD Printed on 02/15/2024

Grantor	Grantee	Sale Price	Sale Date	Inst. Type	Terms of Sale	Liber & Page	Verified By	Prcnt. Trans.
BIGELOW, RICHARD JR	SWINEHART, REX A	5,000	11/03/2015	QC	21-NOT USED/OTHER	676/1483	DEED	100.0
BIGELOW, RICHARD SR	BIGELOW, RICHARD JR	0	02/27/2009	QC	09-FAMILY	618/1524	DEED	100.0
MORROW, STEVEN & KATHLEEN	BIGELOW, RICHARD	22,000	01/31/2005	WD	08-ESTATE	568:639	DEED	0.0
CATES, ANDREW J.	BIGELOW, RICHARD & VALERIE	19,500	06/16/1998	LC	03-ARM'S LENGTH	362:227	DEED	0.0

Property Address

5050 E 10 RD

Owner's Name/Address

SWINEHART, REX A
C/O JENNETT
6975 E 34 RD
CADILLAC MI 49601

Tax Description

1 SQ A IN NW COR OF NW 1/4 OF NW 1/4 1 A. GW. SEC. 25 T24N R10W -MANTON-

Comments/Influences

Class: RESIDENTIAL-IMPROV Zoning:

School: MANTON CONSOLIDATED SCHOOLS

P.R.E. 100% / /

:

2024 Est TCV 20,873 TCV/TFA: 0.00

Building Permit(s)	Date	Number	Status

X Improved | Vacant

Public Improvements

- Dirt Road
- X Gravel Road
- X Paved Road
- Storm Sewer
- Sidewalk
- Water
- Sewer
- Electric
- Gas
- Curb
- Street Lights
- Standard Utilities
- Underground Utils.

Topography of Site

- X Level
- Rolling
- X Low
- High
- Landscaped
- Swamp
- X Wooded
- Pond
- Waterfront
- Ravine
- Wetland
- Flood Plain
- X OPEN

Land Value Estimates for Land Table 4010.LAND VALUES

Description	Frontage	Depth	* Factors * Front	Depth	Rate	%Adj.	Reason	Value
ACREAGE			0.690 Acres		10,953	100		7,558
ROW			0.310 Acres		0	100		0
			1.00 Total Acres		Total Est. Land Value =			7,558

Who	When	What
GLA	07/10/2019	INSPECTION
GLA	05/30/2017	INSPECTION
GLA	03/22/2014	INSPECTION

Year	Land Value	Building Value	Assessed Value	Board of Review	Tribunal/ Other	Taxable Value
2024	3,800	6,600	10,400			7,056C
2023	2,100	5,400	7,500			6,720C
2022	1,700	4,700	6,400			6,400S
2021	2,100	4,700	6,800			6,405C

The Equalizer. Copyright (c) 1999 - 2009.
Licensed To: Township of Greenwood, County of Wexford, Michigan

*** Information herein deemed reliable but not guaranteed***

Building Type

X	Single Family
	Mobile Home
	Town Home
	Duplex
	A-Frame
X	Wood Frame

Building Style: PLAIN

Yr Built	Remodeled
0	0

Condition: Good

Room List

	Basement
	1st Floor
	2nd Floor
	Bedrooms

(1) Exterior

	Wood/Shingle
X	Aluminum/Vinyl
	Brick
X	Insulation

(2) Windows

X	Many Avg. Few		Large Avg. Small

	Wood Sash
	Metal Sash
X	Vinyl Sash
	Double Hung
	Horiz. Slide
	Casement
	Double Glass
	Patio Doors
X	Storms & Screens

(3) Roof

X	Gable		Gambrel
	Hip		Mansard
	Flat		Shed

X	Asphalt Shingle

Chimney:

(3) Roof (cont.)

	Eavestrough
X	Insulation
0	Front Overhang
0	Other Overhang

(4) Interior

X	Drywall Paneled		Plaster Wood T&G

Trim & Decoration

	Ex	X	Ord		Min

Size of Closets

	Lg	X	Ord		Small

Doors:		Solid	X	H.C.	

(5) Floors

Kitchen:
Other: Linoleum
Other: Carpeted

(6) Ceilings

X	Drywall

(7) Excavation

Basement: 0 S.F.
Crawl: 0 S.F.
Slab: 0 S.F.
Height to Joists: 0.0

(8) Basement

	Conc. Block
	Poured Conc.
	Stone
	Treated Wood
	Concrete Floor

(9) Basement Finish

	Recreation SF
	Living SF
	Walkout Doors (B)
	No Floor SF
	Walkout Doors (A)

(10) Floor Support

Joists:
Unsupported Len:
Cntr.Sup:

(11) Heating/Cooling

X	Gas Wood		Oil Coal		Elec. Steam

	Forced Air w/o Ducts
X	Forced Air w/ Ducts
	Forced Hot Water
	Electric Baseboard
	Elec. Ceil. Radiant
	Radiant (in-floor)
	Electric Wall Heat
	Space Heater
	Wall/Floor Furnace
	Forced Heat & Cool
	Heat Pump
	No Heating/Cooling

	Central Air
	Wood Furnace

(12) Electric

150	Amps Service

No./Qual. of Fixtures

	Ex.	X	Ord.		Min

No. of Elec. Outlets

	Many	X	Ave.		Few

(13) Plumbing

1	Average Fixture(s)
	3 Fixture Bath
	2 Fixture Bath
	Softener, Auto
	Softener, Manual
	Solar Water Heat
	No Plumbing
	Extra Toilet
	Extra Sink
	Separate Shower
	Ceramic Tile Floor
	Ceramic Tile Wains
	Ceramic Tub Alcove
	Vent Fan

(14) Water/Sewer

	Public Water
	Public Sewer
1	Water Well
1	1000 Gal Septic
	2000 Gal Septic

Lump Sum Items:

(15) Built-ins

	Appliance Allow.
	Cook Top
	Dishwasher
	Garbage Disposal
	Bath Heater
	Vent Fan
	Hot Tub
	Unvented Hood
	Vented Hood
	Intercom
	Jacuzzi Tub
	Jacuzzi repl.Tub
	Oven
	Microwave
	Standard Range
	Self Clean Range
	Sauna
	Trash Compactor
	Central Vacuum
	Security System

(15) Fireplaces

	Interior 1 Story
	Interior 2 Story
	2nd/Same Stack
	Two Sided
	Exterior 1 Story
	Exterior 2 Story
	Prefab 1 Story
	Prefab 2 Story
	Heat Circulator
	Raised Hearth
	Wood Stove
	Direct-Vented Gas

Class: D
Effec. Age: 54
Floor Area: 0
Total Base New : 22,316 E.C.F.
Total Depr Cost: 10,266 X 1.297
Estimated T.C.V: 13,315

(16) Porches/Decks

Area	Type

(17) Garage

Year Built:
Car Capacity:
Class: D
Exterior: Siding
Brick Ven.: 0
Stone Ven.: 0
Common Wall: Detache
Foundation: 18 Inch
Finished ?:
Auto. Doors: 0
Mech. Doors: 0
Area: 360
% Good: 0
Storage Area: 0
No Conc. Floor: 0

Bsmnt Garage:

Carport Area:
Roof:

Cost Est. for Res. Bldg: 1 Single Family PLAIN Cls D Blt 0
(11) Heating System: Forced Air w/ Ducts
Ground Area = 0 SF Floor Area = 0 SF.
Phy/Ab.Phy/Func/Econ/Comb. % Good=46/100/100/100/46
Building Areas

Stories	Exterior	Foundation	Size	Cost New	Depr. Cost
Other Additions/Adjustments					
Water/Sewer					
1000 Gal Septic			1	4,293	1,975
Water Well, 100 Feet			1	5,545	2,551
Garages					
Class: D Exterior: Siding Foundation: 18 Inch (Unfinished)					
Base Cost			360	12,478	5,740
			Totals:	22,316	10,266

Notes:
ECF (RESIDENTIAL) 1.297 => TCV: 13,315

*** Information herein deemed reliable but not guaranteed***

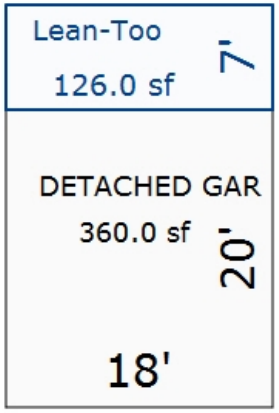

Sketch by Apex Sketch

*** Information herein deemed reliable but not guaranteed***

Parcel Number: 2410-25-2208 Jurisdiction: GREENWOOD TWP County: WEXFORD Printed on 02/15/2024

Grantor	Grantee	Sale Price	Sale Date	Inst. Type	Terms of Sale	Liber & Page	Verified By	Prcnt. Trans.
SCOTT, REBECCA	LETTS, MELVIN	4,000	10/21/2021	QC	08-ESTATE	691/1053	DEED	100.0

Property Address

7770 N 35 RD

Owner's Name/Address

LETTS, MELVIN
5130 E 10 RD
MANTON MI 49663-9746

Tax Description

W 1/2 OF W 1/2 OF NW 1/4 OF NW 1/4 EXC 1 SQ A IN NW COR --9 A.-- GW. SEC. 25 T24N R10W -MANTON-

Comments/Influences

Class: RESIDENTIAL-IMPROV Zoning:

School: MANTON CONSOLIDATED SCHOOLS

P.R.E. 0%

:

2024 Est TCV 42,690 TCV/TFA: 0.00

Building Permit(s)	Date	Number	Status

X	Improved		Vacant

	Public Improvements
X	Dirt Road
X	Gravel Road
	Paved Road
	Storm Sewer
	Sidewalk
	Water
	Sewer
X	Electric
	Gas
	Curb
	Street Lights
	Standard Utilities
	Underground Utils.

	Topography of Site
	Level
X	Rolling
	Low
	High
	Landscaped
	Swamp
X	Wooded
	Pond
	Waterfront
	Ravine
	Wetland
	Flood Plain
X	OPEN

Who	When	What
GLA	07/10/2019	INSPECTION
GLA	05/30/2017	INSPECTION
GLA	03/22/2014	INSPECTION

Land Value Estimates for Land Table 4010.LAND VALUES

Description	Frontage	Depth	* Factors * Front	Depth	Rate	%Adj.	Reason	Value
ACREAGE			8.080 Acres		4,899	100		39,588
ROW			0.920 Acres		0	100		0
			9.00 Total Acres		Total Est. Land Value =			39,588

Year	Land Value	Building Value	Assessed Value	Board of Review	Tribunal/ Other	Taxable Value
2024	19,800	1,500	21,300			13,450C
2023	12,300	1,300	13,600			12,810C
2022	11,000	1,200	12,200			12,200S
2021	11,900	1,100	13,000			12,066C

The Equalizer. Copyright (c) 1999 - 2009.
Licensed To: Township of Greenwood, County of Wexford, Michigan

*** Information herein deemed reliable but not guaranteed***

Building Type

	Single Family
X	Mobile Home
	Town Home
	Duplex
	A-Frame
X	Wood Frame

Building Style: SWT/DWT

Yr Built	Remodeled
0	0

Condition: Fair

Room List

	Basement
	1st Floor
	2nd Floor
	Bedrooms

(1) Exterior

	Wood/Shingle
X	Aluminum/Vinyl
	Brick
X	Insulation

(2) Windows

X	Many		Large
	Avg.	X	Avg.
	Few		Small

	Wood Sash
	Metal Sash
X	Vinyl Sash
	Double Hung
	Horiz. Slide
	Casement
	Double Glass
	Patio Doors
X	Storms & Screens

(3) Roof

X	Gable		Gambrel
	Hip		Mansard
	Flat		Shed
X	Asphalt Shingle		

Chimney:

(3) Roof (cont.)

	Eavestrough
X	Insulation
0	Front Overhang
0	Other Overhang

(4) Interior

X	Drywall		Plaster
	Paneled		Wood T&G

Trim & Decoration

	Ex	X	Ord		Min

Size of Closets

	Lg	X	Ord		Small

Doors:		Solid	X	H.C.	

(5) Floors

Kitchen:
Other: Linoleum
Other: Carpeted

(6) Ceilings

X	Drywall		

(7) Excavation

Basement: 0 S.F.
Crawl: 0 S.F.
Slab: 0 S.F.
Height to Joists: 0.0

(8) Basement

	Conc. Block
	Poured Conc.
	Stone
	Treated Wood
	Concrete Floor

(9) Basement Finish

	Recreation SF
	Living SF
	Walkout Doors (B)
	No Floor SF
	Walkout Doors (A)

(10) Floor Support

Joists:
Unsupported Len:
Cntr.Sup:

(11) Heating/Cooling

X	Gas		Oil		Elec.
	Wood		Coal		Steam

	Forced Warm Air
X	Wall Furnace
	Warm & Cool Air
	Heat Pump

	Central Air
	Wood Furnace

(12) Electric

150	Amps Service

No./Qual. of Fixtures

	Ex.	X	Ord.		Min

No. of Elec. Outlets

	Many	X	Ave.		Few

(13) Plumbing

1	Average Fixture(s)
	3 Fixture Bath
	2 Fixture Bath
	Softener, Auto
	Softener, Manual
	Solar Water Heat
	No Plumbing
	Extra Toilet
	Extra Sink
	Separate Shower
	Ceramic Tile Floor
	Ceramic Tile Wains
	Ceramic Tub Alcove
	Vent Fan

(14) Water/Sewer

	Public Water
	Public Sewer
	Water Well
	1000 Gal Septic
	2000 Gal Septic

Lump Sum Items:

(15) Built-ins

	Appliance Allow.
	Cook Top
	Dishwasher
	Garbage Disposal
	Bath Heater
	Vent Fan
	Hot Tub
	Unvented Hood
	Vented Hood
	Intercom
	Jacuzzi Tub
	Jacuzzi repl.Tub
	Oven
	Microwave
	Standard Range
	Self Clean Range
	Sauna
	Trash Compactor
	Central Vacuum
	Security System

(15) Fireplaces

	Interior 1 Story
	Interior 2 Story
	2nd/Same Stack
	Two Sided
	Exterior 1 Story
	Exterior 2 Story
	Prefab 1 Story
	Prefab 2 Story
	Heat Circulator
	Raised Hearth
	Wood Stove
	Direct-Vented Gas

Class: Fair
Effec. Age: 20
Floor Area:
Total Base New : 0 E.C.F.
Total Depr Cost: 0 X 1.297
Estimated T.C.V: 0

(16) Porches/Decks

Area	Type

(17) Garage

Year Built:
Car Capacity:
Class:
Exterior:
Brick Ven.:
Stone Ven.:
Common Wall:
Foundation:
Finished ?:
Auto. Doors:
Mech. Doors:
Area:
% Good:
Storage Area:
No Conc. Floor:

Bsmnt Garage:

Carport Area:
Roof:

Cost Est. for Res. Bldg: 1 Mobile Home SWT/DWT Cls Fair Blt 0
(11) Heating System: Wall Furnace
Ground Area = 0 SF Floor Area = 0 SF.
Phy/Ab.Phy/Func/Econ/Comb. % Good=46/100/100/100/46
Building Areas

Type	Ext. Walls	Roof/Fnd.	Size	Cost New	Depr. Cost
Other Additions/Adjustments					
			Totals:	0	0

Notes:

ECF (RESIDENTIAL) 1.297 => TCV: 0

*** Information herein deemed reliable but not guaranteed***

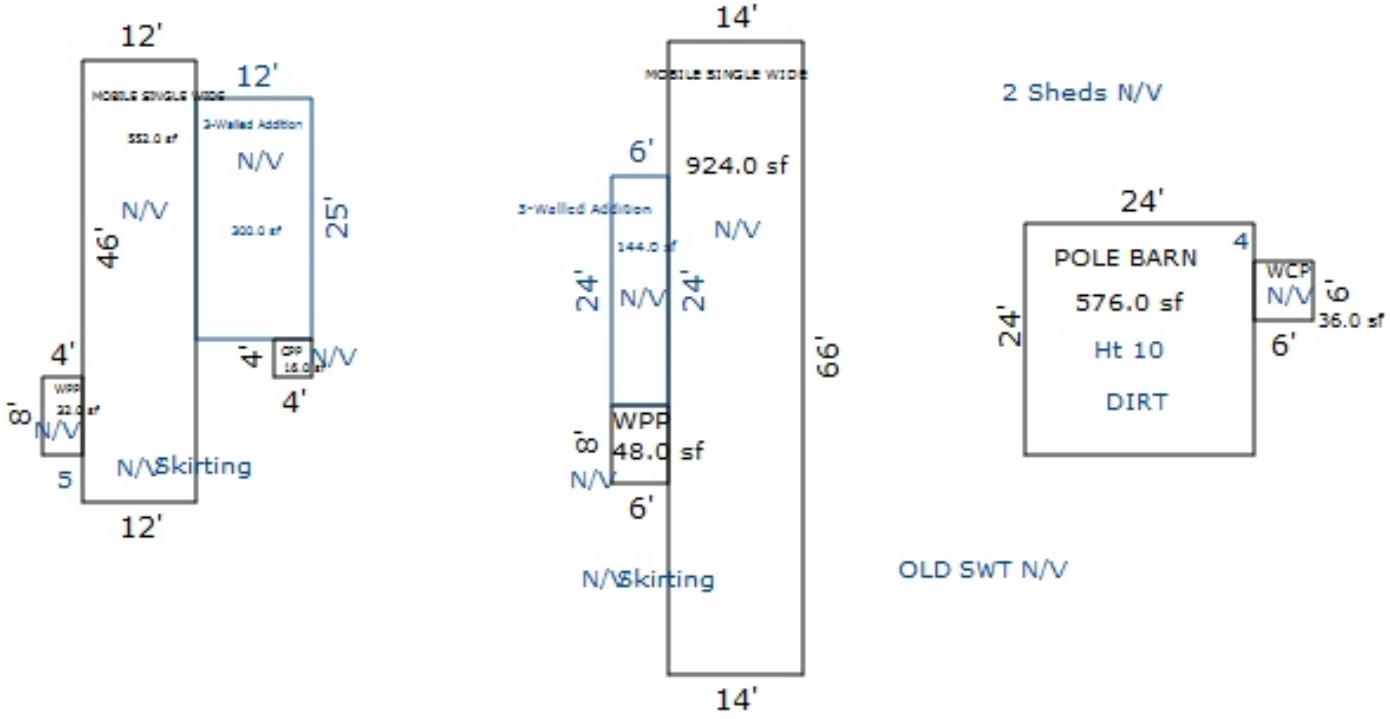

Sketch by Apex Sketch

*** Information herein deemed reliable but not guaranteed***

Building Type

	Single Family
X	Mobile Home
	Town Home
	Duplex
	A-Frame

X	Wood Frame

Building Style: SWT/DWT

Yr Built	Remodeled
0	0

Condition: Good

Room List

	Basement
	1st Floor
	2nd Floor
	Bedrooms

(1) Exterior

X	Wood/Shingle
	Aluminum/Vinyl
	Brick
X	Insulation

(2) Windows

X	Many		Large
	Avg.	X	Avg.
	Few		Small

	Wood Sash
	Metal Sash
X	Vinyl Sash
	Double Hung
	Horiz. Slide
	Casement
	Double Glass
	Patio Doors
X	Storms & Screens

(3) Roof

X	Gable		Gambrel
	Hip		Mansard
	Flat		Shed

X	Asphalt Shingle

Chimney:

(3) Roof (cont.)

	Eavestrough
X	Insulation
0	Front Overhang
0	Other Overhang

(4) Interior

X	Drywall		Plaster
	Paneled		Wood T&G

Trim & Decoration

	Ex	X	Ord		Min

Size of Closets

	Lg	X	Ord		Small

Doors:		Solid	X	H.C.	

(5) Floors

Kitchen:
Other: Linoleum
Other: Carpeted

(6) Ceilings

X	Drywall		

(7) Excavation

Basement: 0 S.F.
Crawl: 0 S.F.
Slab: 0 S.F.
Height to Joists: 0.0

(8) Basement

	Conc. Block
	Poured Conc.
	Stone
	Treated Wood
	Concrete Floor

(9) Basement Finish

	Recreation SF
	Living SF
	Walkout Doors (B)
	No Floor SF
	Walkout Doors (A)

(10) Floor Support

Joists:
Unsupported Len:
Cntr.Sup:

(11) Heating/Cooling

X	Gas		Oil		Elec.
	Wood		Coal		Steam

X	Forced Warm Air
	Wall Furnace
	Warm & Cool Air
	Heat Pump

	Central Air
	Wood Furnace

(12) Electric

150	Amps Service

No./Qual. of Fixtures

	Ex.	X	Ord.		Min

No. of Elec. Outlets

	Many	X	Ave.		Few

(13) Plumbing

	Average Fixture(s)
1	3 Fixture Bath
	2 Fixture Bath
	Softener, Auto
	Softener, Manual
	Solar Water Heat
	No Plumbing
	Extra Toilet
	Extra Sink
	Separate Shower
	Ceramic Tile Floor
	Ceramic Tile Wains
	Ceramic Tub Alcove
	Vent Fan

(14) Water/Sewer

	Public Water
	Public Sewer
	Water Well
	1000 Gal Septic
	2000 Gal Septic

Lump Sum Items:

(15) Built-ins

	Appliance Allow.
	Cook Top
	Dishwasher
	Garbage Disposal
	Bath Heater
	Vent Fan
	Hot Tub
	Unvented Hood
	Vented Hood
	Intercom
	Jacuzzi Tub
	Jacuzzi repl.Tub
	Oven
	Microwave
	Standard Range
	Self Clean Range
	Sauna
	Trash Compactor
	Central Vacuum
	Security System

(15) Fireplaces

	Interior 1 Story
	Interior 2 Story
	2nd/Same Stack
	Two Sided
	Exterior 1 Story
	Exterior 2 Story
	Prefab 1 Story
	Prefab 2 Story
	Heat Circulator
	Raised Hearth
	Wood Stove
	Direct-Vented Gas

Class: Fair
Effec. Age: 23
Floor Area:
Total Base New : 14,953 E.C.F.
Total Depr Cost: 2,392 X 1.297
Estimated T.C.V: 3,102

(16) Porches/Decks

Area	Type

(17) Garage

Year Built:
Car Capacity:
Class: CD
Exterior: Pole
Brick Ven.: 0
Stone Ven.: 0
Common Wall: Detache
Foundation: 18 Inch
Finished ?:
Auto. Doors: 0
Mech. Doors: 0
Area: 576
% Good: 16
Storage Area: 0
No Conc. Floor: 0

Bsmnt Garage:

Carport Area:
Roof:

Cost Est. for Res. Bldg: 2 Mobile Home SWT/DWT Cls Fair Blt 0
(11) Heating System: Forced Warm Air
Ground Area = 0 SF Floor Area = 0 SF.
Phy/Ab.Phy/Func/Econ/Comb. % Good=38/100/100/100/38
Building Areas

Type	Ext. Walls	Roof/Fnd.	Size	Cost New	Depr. Cost	
Other Additions/Adjustments						
Garages						
Class: CD Exterior: Pole (Unfinished)						
Base Cost			576	14,953	2,392	*1
			Totals:	14,953	2,392	

Notes:
ECF (RESIDENTIAL) 1.297 => TCV: 3,102

*** Information herein deemed reliable but not guaranteed***

Parcel Number: 2410-25-2301 Jurisdiction: GREENWOOD TWP County: WEXFORD Printed on 02/15/2024

Grantor	Grantee	Sale Price	Sale Date	Inst. Type	Terms of Sale	Liber & Page	Verified By	Prcnt. Trans.
GILLEN, TIMOTHY & SUSAN H	THOEL, JOHN C JR	0	11/06/2014	MLC	21-NOT USED/OTHER	672/313	DEED	100.0
GILLEN, TIMOTHY	TRAVERSER CITY STATE BANK	0	11/06/2014	SD	10-FORECLOSURE	672/315	DEED	100.0
WAITE EVERETT	GILLEN, TIMOTHY	59,000	03/09/2007	WD	03-ARM'S LENGTH	598/11	DEED	0.0
WAITE, EVERETT	GILLEN, TIMOTHY	59,000	01/16/2007	WD	03-ARM'S LENGTH	598:11	DEED	100.0

Property Address

Owner's Name/Address

THOEL, JOHN C JR
709 N MICHIGAN AVE
MANTON MI 49663

Tax Description

SW 1/4 OF NW 1/4 EXC S 330 FT OF W 693 FT THEREOF & EXC NW 1/4 THEREOF 23.43 A M/L GW. SEC. 25 T24N R10W -MANTON-

Comments/Influences

Class: RESIDENTIAL-VACANT Zoning:

School: MANTON CONSOLIDATED SCHOOLS

P.R.E. 0%

:

2024 Est TCV 66,576

Building Permit(s)	Date	Number	Status

	Improved	X	Vacant

	Public Improvements
X	Dirt Road
X	Gravel Road
X	Paved Road
	Storm Sewer
	Sidewalk
	Water
	Sewer
	Electric
	Gas
	Curb
	Street Lights
	Standard Utilities
	Underground Utils.

	Topography of Site
	Level
X	Rolling
X	Low
	High
	Landscaped
X	Swamp
X	Wooded
	Pond
	Waterfront
	Ravine
	Wetland
	Flood Plain
X	OPEN/PINES

Who	When	What
GLA	07/10/2019	INSPECTION
GLA	05/30/2017	INSPECTION
LM	08/26/2008	INSPECTED

Land Value Estimates for Land Table 4010.LAND VALUES

Description	Frontage	Depth	* Factors * Front	Depth	Rate	%Adj.	Reason	Value
ACREAGE			23.180 Acres		2,872	100		66,576
ROW			0.250 Acres		0	100		0
			23.43 Total Acres		Total Est. Land Value =			66,576

Year	Land Value	Building Value	Assessed Value	Board of Review	Tribunal/ Other	Taxable Value
2024	33,300	0	33,300			22,944C
2023	29,300	0	29,300			21,852C
2022	25,500	0	25,500			20,812C
2021	23,200	0	23,200			20,148C

The Equalizer. Copyright (c) 1999 - 2009.
Licensed To: Township of Greenwood, County of Wexford, Michigan

*** Information herein deemed reliable but not guaranteed***

Parcel Number: 2410-25-2302 Jurisdiction: GREENWOOD TWP County: WEXFORD Printed on 02/15/2024

Grantor	Grantee	Sale Price	Sale Date	Inst. Type	Terms of Sale	Liber & Page	Verified By	Prcnt. Trans.
SCOTT, STEPHEN & SANDRA	RUGINIS, PATRICIA ETAL	2,500	09/06/2005	WD	03-ARM'S LENGTH	577:1952	DEED	0.0

Property Address

Owner's Name/Address

RUGINIS, PATRICIA
ETAL
5280 E 10 RD
MANTON MI 49663

Tax Description

PAR COM AT SW COR OF SW 1/4 OF NW 1/4: N 330 FT; E 693 FT; S 330 FT; W 693 FT TO POB. --5.25 A. M/L-- GW. SEC. 25 T24N R10W -MANTON-

Comments/Influences

Class: RESIDENTIAL-VACANT Zoning:

School: MANTON CONSOLIDATED SCHOOLS

P.R.E. 100% / /

:

2024 Est TCV 25,560

Building Permit(s)	Date	Number	Status

	Improved	X	Vacant

	Public Improvements
X	Dirt Road
X	Gravel Road
	Paved Road
	Storm Sewer
	Sidewalk
	Water
	Sewer
X	Electric
	Gas
	Curb
	Street Lights
	Standard Utilities
	Underground Utils.

	Topography of Site
	Level
X	Rolling
	Low
	High
	Landscaped
	Swamp
X	Wooded
	Pond
	Waterfront
	Ravine
	Wetland
	Flood Plain
X	OPEN/PINES

Who	When	What
GLA	07/10/2019	INSPECTION
GLA	05/30/2017	INSPECTION
LM	10/31/2011	APPR INSPE

Land Value Estimates for Land Table 4010.LAND VALUES

Description	Frontage	Depth	* Factors * Front	Depth	Rate	%Adj.	Reason	Value
HELSEL RIV LOW	330.00	693.00	1.0000	0.0000	315	100*		0
ACREAGE			5.000 Acres		5,112	100		25,560
ROW			0.250 Acres		0	100		0

* denotes lines that do not contribute to the total acreage calculation.

330 Actual Front Feet, 5.25 Total Acres Total Est. Land Value = 25,560

Year	Land Value	Building Value	Assessed Value	Board of Review	Tribunal/ Other	Taxable Value
2024	12,800	0	12,800			6,612C
2023	10,800	0	10,800			6,298C
2022	7,500	0	7,500			5,999C
2021	8,500	0	8,500			5,808C

The Equalizer. Copyright (c) 1999 - 2009.
Licensed To: Township of Greenwood, County of Wexford, Michigan

*** Information herein deemed reliable but not guaranteed***

Parcel Number: 2410-25-2303 Jurisdiction: GREENWOOD TWP County: WEXFORD Printed on 02/15/2024

Grantor	Grantee	Sale Price	Sale Date	Inst. Type	Terms of Sale	Liber & Page	Verified By	Prcnt. Trans.
HAMILTON, LOUIS G & MARIAN	GINGRAS, MICHAEL CHRISOPHE	110,000	05/07/2021	WD	03-ARM'S LENGTH	690/411	AGENT	100.0
LAPAN, DAVID & SUSAN	HAMILTON, LOUIS G & MARIAN	65,000	05/20/2010	WD	03-ARM'S LENGTH	630/1267	DEED	100.0
HAMILTON, LOUIS G & MARIAN	HAMILTON, LOUIS G & MARIAN	0	05/17/2010	QC	18-LIFE ESTATE	630/1269	DEED	0.0
PORTER, DONALD L.	LAPAN ET AL, DAVID	32,000	06/27/1996	WD	03-ARM'S LENGTH	350:99	DEED	0.0

Property Address

7702 N 35 RD 824-3771

Owner's Name/Address

GINGRAS, MICHAEL CHRISOPHER
7702 N 35 RD
MANTON MI 49663

Tax Description

NW 1/4 OF SW 1/4 OF NW 1/4 10 A. GW. SEC. 25 T24N R10W -MANTON-

Comments/Influences

Default Comments

Class: RESIDENTIAL-IMPROV Zoning:

School: MANTON CONSOLIDATED SCHOOLS

P.R.E. 100% 05/13/2021

:

2024 Est TCV 157,587 TCV/TFA: 135.04

Building Permit(s)	Date	Number	Status
Pole Barn	10/23/2023	PB23-0307	COMPLETE

X	Improved	
		Vacant

	Public Improvements
	Dirt Road
X	Gravel Road
	Paved Road
	Storm Sewer
	Sidewalk
	Water
	Sewer
X	Electric
	Gas
	Curb
	Street Lights
	Standard Utilities
	Underground Utils.

	Topography of Site
	Level
X	Rolling
X	Low
X	High
	Landscaped
	Swamp
X	Wooded
	Pond
	Waterfront
	Ravine
	Wetland
	Flood Plain
X	OPEN

Who	When	What
GLA	07/10/2019	INSPECTION
GLA	05/30/2017	INSPECTION
GLA	08/02/2014	INSPECTED

Land Value Estimates for Land Table 4010.LAND VALUES

Description	Frontage	Depth	* Factors * Front	Depth	Rate	%Adj.	Reason	Value
ACREAGE			9.510 Acres		4,692	100		44,624
			0.490 Acres		0	100		0
			10.00 Total Acres		Total Est. Land Value =			44,624

Land Improvement Cost Estimates

Description	Rate	Size	% Good	Cash Value
D/W/P: 4in Concrete	6.15	36	61	135
Total Estimated Land Improvements True Cash Value =				135

Year	Land Value	Building Value	Assessed Value	Board of Review	Tribunal/ Other	Taxable Value
2024	22,300	56,500	78,800			56,448C
2023	12,800	46,100	58,900			53,760C
2022	11,800	39,400	51,200			51,200S
2021	12,000	40,500	52,500			40,417C

The Equalizer. Copyright (c) 1999 - 2009.
Licensed To: Township of Greenwood, County of Wexford, Michigan

*** Information herein deemed reliable but not guaranteed***

Building Type

X	Single Family
	Mobile Home
	Town Home
	Duplex
	A-Frame
X	Wood Frame

Building Style: PLAIN

Yr Built	Remodeled
0	0

Condition: Fair

Room List

	Basement
	1st Floor
	2nd Floor
	Bedrooms

(1) Exterior

X	Wood/Shingle
	Aluminum/Vinyl
	Brick
	Insulation

(2) Windows

X	Many		Large
	Avg.	X	Avg.
	Few		Small

	Wood Sash
	Metal Sash
	Vinyl Sash
	Double Hung
	Horiz. Slide
	Casement
	Double Glass
	Patio Doors
	Storms & Screens

(3) Roof

X	Gable		Gambrel
	Hip		Mansard
	Flat		Shed
X	Asphalt Shingle		

Chimney: Brick

(3) Roof (cont.)

	Eavestrough
	Insulation
0	Front Overhang
0	Other Overhang

(4) Interior

	Drywall		Plaster
	Paneled		Wood T&G

Trim & Decoration

	Ex	X	Ord		Min

Size of Closets

	Lg	X	Ord		Small

Doors:		Solid	X	H.C.	

(5) Floors

Kitchen:
Other:
Other:

(6) Ceilings

(7) Excavation

Basement: 1167 S.F.
Crawl: 0 S.F.
Slab: 0 S.F.
Height to Joists: 0.0

(8) Basement

	Conc. Block
	Poured Conc.
	Stone
	Treated Wood
	Concrete Floor

(9) Basement Finish

	Recreation SF
	Living SF
	Walkout Doors (B)
	No Floor SF
	Walkout Doors (A)

(10) Floor Support

Joists:
Unsupported Len:
Cntr.Sup:

(11) Heating/Cooling

X	Gas		Oil		Elec.
	Wood		Coal		Steam

	Forced Air w/o Ducts
X	Forced Air w/ Ducts
	Forced Hot Water
	Electric Baseboard
	Elec. Ceil. Radiant
	Radiant (in-floor)
	Electric Wall Heat
	Space Heater
	Wall/Floor Furnace
	Forced Heat & Cool
	Heat Pump
	No Heating/Cooling

	Central Air
	Wood Furnace

(12) Electric

0	Amps Service

No./Qual. of Fixtures

	Ex.	X	Ord.		Min

No. of Elec. Outlets

	Many	X	Ave.		Few

(13) Plumbing

1	Average Fixture(s)
	3 Fixture Bath
	2 Fixture Bath
	Softener, Auto
	Softener, Manual
	Solar Water Heat
	No Plumbing
	Extra Toilet
	Extra Sink
	Separate Shower
	Ceramic Tile Floor
	Ceramic Tile Wains
	Ceramic Tub Alcove
	Vent Fan

(14) Water/Sewer

	Public Water
	Public Sewer
1	Water Well
1	1000 Gal Septic
	2000 Gal Septic

Lump Sum Items:
36

(15) Built-ins

	Appliance Allow.
	Cook Top
	Dishwasher
	Garbage Disposal
	Bath Heater
	Vent Fan
	Hot Tub
	Unvented Hood
	Vented Hood
	Intercom
	Jacuzzi Tub
	Jacuzzi repl.Tub
	Oven
	Microwave
	Standard Range
	Self Clean Range
	Sauna
	Trash Compactor
	Central Vacuum
	Security System

(15) Fireplaces

	Interior 1 Story
	Interior 2 Story
	2nd/Same Stack
	Two Sided
	Exterior 1 Story
	Exterior 2 Story
	Prefab 1 Story
	Prefab 2 Story
	Heat Circulator
	Raised Hearth
	Wood Stove
	Direct-Vented Gas

Class: D
Effec. Age: 49
Floor Area: 1,167
Total Base New : 170,572 E.C.F.
Total Depr Cost: 86,992 X 1.297
Estimated T.C.V: 112,828

(16) Porches/Decks

Area	Type
30	CPP

(17) Garage

Year Built:
Car Capacity:
Class: D
Exterior: Siding
Brick Ven.: 0
Stone Ven.: 0
Common Wall: Detache
Foundation: 18 Inch
Finished ?:
Auto. Doors: 0
Mech. Doors: 0
Area: 960
% Good: 0
Storage Area: 0
No Conc. Floor: 960

Bsmnt Garage:

Carport Area:
Roof:

Cost Est. for Res. Bldg: 1 Single Family PLAIN Cls D Blt 0
(11) Heating System: Forced Air w/ Ducts
Ground Area = 1167 SF Floor Area = 1167 SF.
Phy/Ab.Phy/Func/Econ/Comb. % Good=51/100/100/100/51
Building Areas

Stories	Exterior	Foundation	Size	Cost New	Depr. Cost
1 Story	Block	Basement	1,167		
			Total:	139,991	71,395
Other Additions/Adjustments					
Water/Sewer					
1000 Gal Septic			1	4,200	2,142
Water Well, 100 Feet			1	5,584	2,848
Porches					
CPP			30	732	373
Garages					
Class: D Exterior: Siding Foundation: 18 Inch (Unfinished)					
Base Cost			960	25,219	12,862
No Concrete Floor			960	-5,424	-2,766
Lump Sum Items					
BASMT ENT				270	138
			Totals:	170,572	86,992

Notes:
ECF (RESIDENTIAL) 1.297 => TCV: 112,828

*** Information herein deemed reliable but not guaranteed***

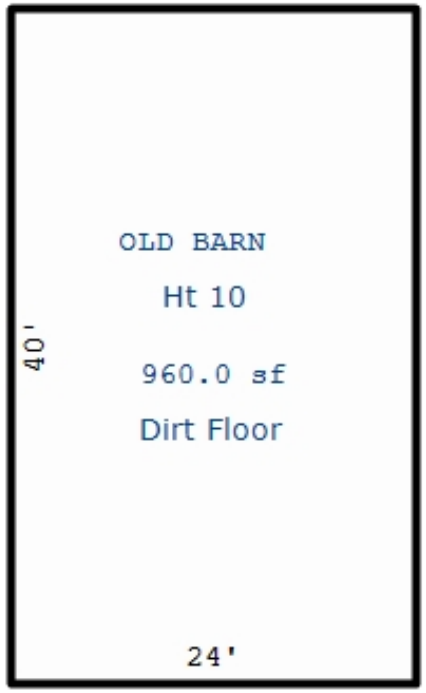

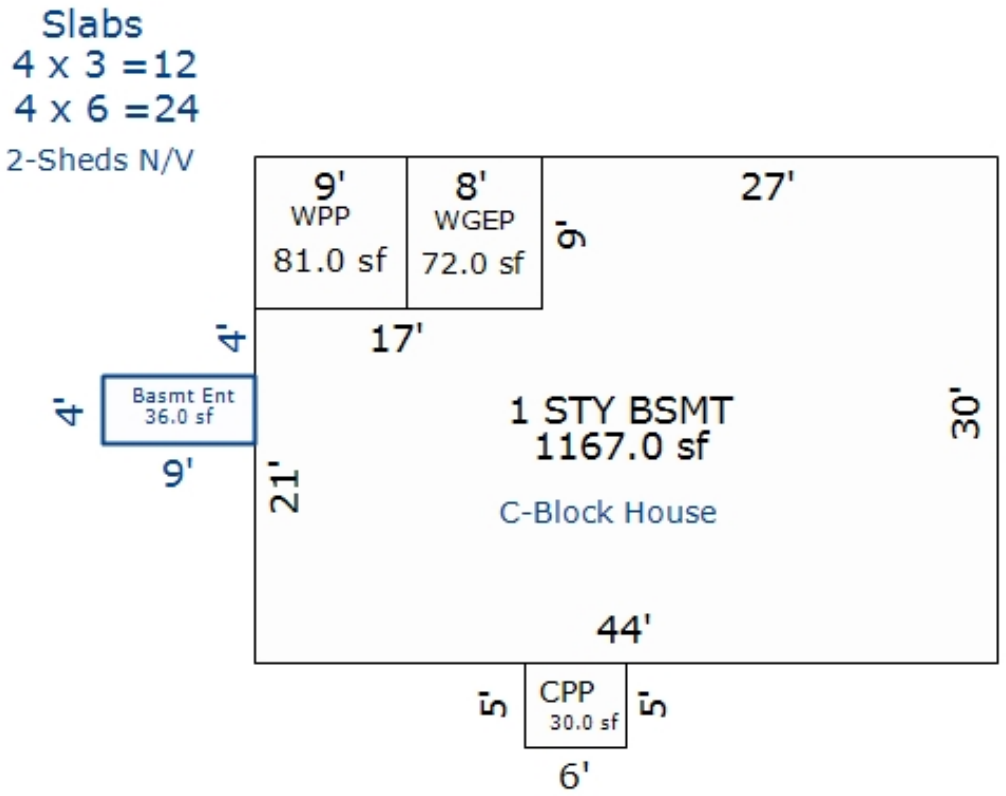

*** Information herein deemed reliable but not guaranteed***

Parcel Number: 2410-25-2401 Jurisdiction: GREENWOOD TWP County: WEXFORD Printed on 02/15/2024

Grantor	Grantee	Sale Price	Sale Date	Inst. Type	Terms of Sale	Liber & Page	Verified By	Prcnt. Trans.
HOOVER, ROBERT P & JOAN L	HOOVER, ROBERT P & JOAN L	100	05/24/2022	QC	18-LIFE ESTATE	693/1114	DEED	0.0
HOOVER, ROBERT P. & JOAN L	HOOVER, ROBERT P & JOAN L	0	06/17/2015	QC	21-NOT USED/OTHER	675/1492	DEED	0.0

Property Address

Owner's Name/Address

HOOVER, ROBERT P & JOAN L LE
6879 CWT ACROSS RD
REPUBLIC MI 49879

Tax Description

SE 1/4 OF NW 1/4 & E 20 FT OF NE 1/4 OF NW 1/4 --40 A. M/L-- GW. SEC. 25 T24N R10W -MANTON-

Comments/Influences

Class: RESIDENTIAL-VACANT Zoning:

School: MANTON CONSOLIDATED SCHOOLS

P.R.E. 0%

:

2024 Est TCV 108,771

Building Permit(s)	Date	Number	Status

	Improved	X	Vacant

	Public Improvements
	Dirt Road
	Gravel Road
X	Paved Road
	Storm Sewer
	Sidewalk
	Water
	Sewer
X	Electric
	Gas
	Curb
	Street Lights
	Standard Utilities
	Underground Utils.

	Topography of Site
	Level
X	Rolling
	Low
	High
	Landscaped
	Swamp
X	Wooded
	Pond
	Waterfront
	Ravine
	Wetland
	Flood Plain
X	OPEN

Who	When	What
GLA	07/10/2019	INSPECTION
GLA	05/30/2017	INSPECTION

Land Value Estimates for Land Table 4010.LAND VALUES

Description	Frontage	Depth	* Factors * Front	Depth	Rate	%Adj.	Reason	Value
ACREAGE			39.960 Acres		2,722	100		108,771
			0.040 Acres		0	100		0
			40.00 Total Acres		Total Est. Land Value =			108,771

Year	Land Value	Building Value	Assessed Value	Board of Review	Tribunal/ Other	Taxable Value
2024	54,400	0	54,400			12,647C
2023	48,000	0	48,000			12,045C
2022	38,000	0	38,000			11,472C
2021	34,000	0	34,000			11,106C

The Equalizer. Copyright (c) 1999 - 2009. Licensed To: Township of Greenwood, County of Wexford, Michigan

*** Information herein deemed reliable but not guaranteed***

Parcel Number: 2410-25-3101-01 Jurisdiction: GREENWOOD TWP County: WEXFORD Printed on 02/15/2024

Grantor	Grantee	Sale Price	Sale Date	Inst. Type	Terms of Sale	Liber & Page	Verified By	Prcnt. Trans.
MATTISON, CALEB	MATTISON, CALEB JOHN & LOU	0	04/08/2022	QC	09-FAMILY	692/2213	DEED	0.0
FOUNTAIN, ROBERT, LAFRENIE	MATTISON, CALEB	72,000	02/18/2022	WD	03-ARM'S LENGTH	692/831	DEED	100.0

Property Address

7302 N 35 RD

Owner's Name/Address

MATTISON, CALEB JOHN & LOUISE E
7302 N 35 RD
MANTON MI 49663

Tax Description

W 330 FT OF S 660 FT OF N 1/2 OF SW 1/4 5 A. GW. SEC. 25 T24N R10W -MANTON-SPLIT/COMBINED ON 01/05/2022 FROM 2410-25-3101;

Comments/Influences

Split/Comb. on 01/05/2022 completed 01/05/2022 LINDA ;
Parent Parcel(s): 2410-25-3101;
Child Parcel(s): 2410-25-3101-01, 2410-25-3101-02;

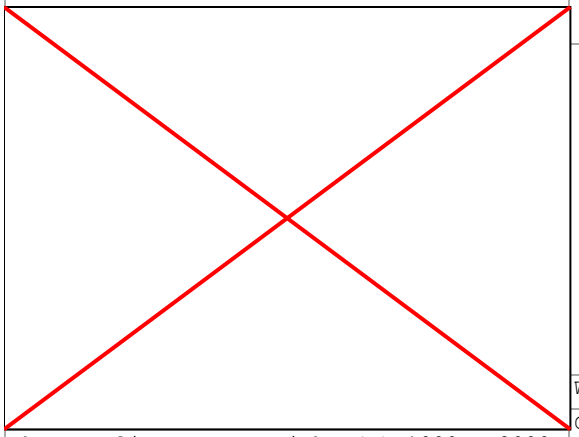

The Equalizer. Copyright (c) 1999 - 2009.
Licensed To: Township of Greenwood, County of Wexford, Michigan

Class: RESIDENTIAL-IMPROV Zoning:
School: MANTON CONSOLIDATED SCHOOLS
P.R.E. 100% 02/28/2022
:
2024 Est TCV 107,467 TCV/TFA: 127.94

Building Permit(s)	Date	Number	Status

X Improved | Vacant

Public Improvements

Dirt Road
Gravel Road
Paved Road
Storm Sewer
Sidewalk
Water
Sewer
Electric
Gas
Curb
Street Lights
Standard Utilities
Underground Utils.

Topography of Site

Level
Rolling
Low
High
Landscaped
Swamp
Wooded
Pond
Waterfront
Ravine
Wetland
Flood Plain

Who	When	What
GLA	10/31/2022	INSPECTION

Land Value Estimates for Land Table 4010.LAND VALUES

Description	Frontage	Depth	* Factors * Front	Depth	Rate	%Adj.	Reason	Value
ACREAGE			5.000 Acres		5,112	100		25,560
			5.00 Total Acres			Total Est. Land Value =		25,560

Land Improvement Cost Estimates

Description	Rate	Size	% Good	Cash Value
D/W/P: 3.5 Concrete	5.82	33	48	92
Wood Frame	18.03	800	48	6,924
Total Estimated Land Improvements True Cash Value =				7,016

Year	Land Value	Building Value	Assessed Value	Board of Review	Tribunal/ Other	Taxable Value
2024	12,800	40,900	53,700			50,925C
2023	10,800	37,700	48,500			48,500S
2022	7,500	31,900	39,400			30,365C
2021	0	0	0			0

*** Information herein deemed reliable but not guaranteed***

Building Type

X	Single Family
	Mobile Home
	Town Home
	Duplex
	A-Frame
X	Wood Frame

Building Style: PLAIN

Yr Built	Remodeled
0	0

Condition: Very Poor

Room List

	Basement
	1st Floor
	2nd Floor
	Bedrooms

(1) Exterior

	Wood/Shingle
X	Aluminum/Vinyl
	Brick
X	Insulation

(2) Windows

X	Many		Large
	Avg.	X	Avg.
	Few		Small

	Wood Sash
	Metal Sash
X	Vinyl Sash
	Double Hung
	Horiz. Slide
	Casement
	Double Glass
	Patio Doors
X	Storms & Screens

(3) Roof

X	Gable		Gambrel
	Hip		Mansard
	Flat		Shed

X	Asphalt Shingle

Chimney:

(3) Roof (cont.)

	Eavestrough
X	Insulation
0	Front Overhang
0	Other Overhang

(4) Interior

X	Drywall		Plaster
	Paneled		Wood T&G

Trim & Decoration

	Ex	X	Ord		Min

Size of Closets

	Lg	X	Ord		Small

Doors:		Solid	X	H.C.	

(5) Floors

Kitchen:
Other: Linoleum
Other: Carpeted

(6) Ceilings

X	Drywall		

(7) Excavation

Basement: 840 S.F.
Crawl: 0 S.F.
Slab: 0 S.F.
Height to Joists: 0.0

(8) Basement

	Conc. Block
	Poured Conc.
	Stone
	Treated Wood
	Concrete Floor

(9) Basement Finish

	Recreation SF
	Living SF
	Walkout Doors (B)
	No Floor SF
	Walkout Doors (A)

(10) Floor Support

Joists:
Unsupported Len:
Cntr.Sup:

(11) Heating/Cooling

X	Gas		Oil		Elec.
	Wood		Coal		Steam

	Forced Air w/o Ducts
X	Forced Air w/ Ducts
	Forced Hot Water
	Electric Baseboard
	Elec. Ceil. Radiant
	Radiant (in-floor)
	Electric Wall Heat
	Space Heater
	Wall/Floor Furnace
	Forced Heat & Cool
	Heat Pump
	No Heating/Cooling

	Central Air
	Wood Furnace

(12) Electric

150	Amps Service

No./Qual. of Fixtures

	Ex.	X	Ord.		Min

No. of Elec. Outlets

	Many	X	Ave.		Few

(13) Plumbing

1	Average Fixture(s)
	3 Fixture Bath
	2 Fixture Bath
	Softener, Auto
	Softener, Manual
	Solar Water Heat
	No Plumbing
	Extra Toilet
	Extra Sink
	Separate Shower
	Ceramic Tile Floor
	Ceramic Tile Wains
	Ceramic Tub Alcove
	Vent Fan

(14) Water/Sewer

	Public Water
	Public Sewer
1	Water Well
1	1000 Gal Septic
	2000 Gal Septic

Lump Sum Items:

(15) Built-ins

	Appliance Allow.
	Cook Top
	Dishwasher
	Garbage Disposal
	Bath Heater
	Vent Fan
	Hot Tub
	Unvented Hood
	Vented Hood
	Intercom
	Jacuzzi Tub
	Jacuzzi repl.Tub
	Oven
	Microwave
	Standard Range
	Self Clean Range
	Sauna
	Trash Compactor
	Central Vacuum
	Security System

(15) Fireplaces

	Interior 1 Story
	Interior 2 Story
	2nd/Same Stack
	Two Sided
	Exterior 1 Story
	Exterior 2 Story
	Prefab 1 Story
	Prefab 2 Story
	Heat Circulator
	Raised Hearth
	Wood Stove
	Direct-Vented Gas

Class: D
Effec. Age: 47
Floor Area: 840
Total Base New : 149,371 E.C.F.
Total Depr Cost: 79,166 X 0.946
Estimated T.C.V: 74,891

(16) Porches/Decks

Area	Type
140	WGEP (1 Story)
147	CGEP (1 Story)
21	WPP

(17) Garage

Year Built:
Car Capacity:
Class: D
Exterior: Siding
Brick Ven.: 0
Stone Ven.: 0
Common Wall: Detache
Foundation: 18 Inch
Finished ?:
Auto. Doors: 0
Mech. Doors: 0
Area: 360
% Good: 0
Storage Area: 0
No Conc. Floor: 0

Bsmnt Garage:

Carport Area:
Roof:

Cost Est. for Res. Bldg: 1 Single Family PLAIN Cls D Blt 0
(11) Heating System: Forced Air w/ Ducts
Ground Area = 840 SF Floor Area = 840 SF.
Phy/Ab.Phy/Func/Econ/Comb. % Good=53/100/100/100/53
Building Areas

Stories	Exterior	Foundation	Size	Cost New	Depr. Cost
1 Story	Siding	Basement	840		
			Total:	107,973	57,226
Other Additions/Adjustments					
Water/Sewer					
1000 Gal Septic			1	4,293	2,275
Water Well, 100 Feet			1	5,545	2,939
Porches					
WGEP (1 Story)			140	10,130	5,369
CGEP (1 Story)			147	7,957	4,217
WPP			21	995	527
Garages					
Class: D Exterior: Siding Foundation: 18 Inch (Unfinished)					
Base Cost			360	12,478	6,613
			Totals:	149,371	79,166

Notes:

ECF (AG) 0.946 => TCV: 74,891

*** Information herein deemed reliable but not guaranteed***

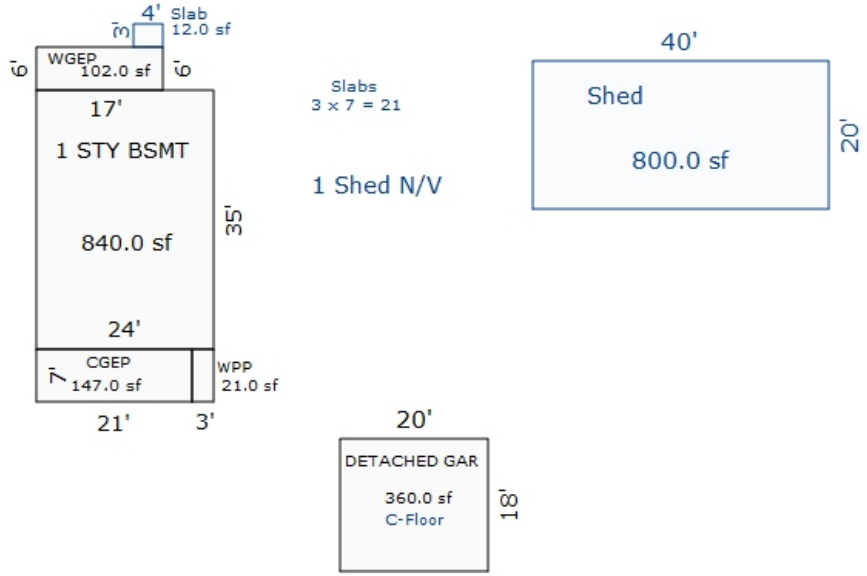

Sketch by Apex Sketch

*** Information herein deemed reliable but not guaranteed***

Parcel Number: 2410-25-3101-02 Jurisdiction: GREENWOOD TWP County: WEXFORD Printed on 02/15/2024

Grantor	Grantee	Sale Price	Sale Date	Inst. Type	Terms of Sale	Liber & Page	Verified By	Prcnt. Trans.

Property Address
7302 N 35 RD

Owner's Name/Address
FOUNTAIN, ROBERT, LAFRENIERE, MATT JESSICA LAFRENIERE 1014 E LAKE MITCHELL DR CADILLAC MI 49601

Tax Description
N 1/2 OF SW 1/4 EXC W 330 FT OF S 660 FT THEREOF 75 A. GW. SEC. 25 T24N R10W -MANTON- SPLIT/COMBINED ON 01/05/2022 FROM 2410-25-3101;

Comments/Influences
Split/Comb. on 01/05/2022 completed 01/05/2022 LINDA ; Parent Parcel(s): 2410-25-3101; Child Parcel(s): 2410-25-3101-01, 2410-25-3101-02; ----------

Class: AGRICULTURAL-VACAN	Zoning:
School: MANTON CONSOLIDATED SCHOOLS	
P.R.E. 100% 03/19/2019 Qual. Ag.	
:	
2024 Est TCV 201,750	

Building Permit(s)	Date	Number	Status

	Improved	X	Vacant

Public Improvements
Dirt Road
Gravel Road
Paved Road
Storm Sewer
Sidewalk
Water
Sewer
Electric
Gas
Curb
Street Lights
Standard Utilities
Underground Utils.

Topography of Site
Level
Rolling
Low
High
Landscaped
Swamp
Wooded
Pond
Waterfront
Ravine
Wetland
Flood Plain

Who	When	What
GLA	10/31/2022	INSPECTION

Land Value Estimates for Land Table 1010.AG

Description	Frontage	Depth	* Factors * Front	Depth	Rate	%Adj.	Reason	Value
AG LAND	80 ACRES		75.00 Acres		2690	100		201,750
			75.00 Total Acres		Total Est. Land Value =			201,750

Year	Land Value	Building Value	Assessed Value	Board of Review	Tribunal/ Other	Taxable Value
2024	100,900	0	100,900			62,949C
2023	75,000	0	75,000			59,952C
2022	67,500	0	67,500			57,098C
2021	0	0	0			0

The Equalizer. Copyright (c) 1999 - 2009.
Licensed To: Township of Greenwood, County of Wexford, Michigan

*** Information herein deemed reliable but not guaranteed***

Parcel Number: 2410-25-3301 Jurisdiction: GREENWOOD TWP County: WEXFORD Printed on 02/15/2024

Grantor	Grantee	Sale Price	Sale Date	Inst. Type	Terms of Sale	Liber & Page	Verified By	Prcnt. Trans.
HUGHES, JANETTE	MITCHELL, MARTIN L.	25,000	06/03/1991	LC	03-ARM'S LENGTH	332:696	DEED	0.0
HULETT, JANETTE 11%	KELTY, BOBBY	25,000	06/16/1986	LC	03-ARM'S LENGTH	301:916	DEED	0.0

Property Address

5119 E 12 RD

Owner's Name/Address

MITCHELL, MARTIN L.
5119 E 12 RD
MANTON MI 49663

Tax Description

SW 1/4 OF SW 1/4 EXC S 417.5 FT OF E 208.75 FT THEREOF --38 A. M/L GW. SEC. 25 T24N R10W -MANTON-

Comments/Influences

The Equalizer. Copyright (c) 1999 - 2009. Licensed To: Township of Greenwood, County of Wexford, Michigan

Class: RESIDENTIAL-IMPROV Zoning:

School: MANTON CONSOLIDATED SCHOOLS

P.R.E. 100% 07/22/2011

:

2024 Est TCV 119,323 TCV/TFA: 100.27

Building Permit(s)	Date	Number	Status

X Improved | Vacant

	Public Improvements
X	Dirt Road
X	Gravel Road
	Paved Road
	Storm Sewer
	Sidewalk
	Water
	Sewer
	Electric
	Gas
	Curb
	Street Lights
	Standard Utilities
	Underground Utils.

	Topography of Site
	Level
X	Rolling
X	Low
	High
	Landscaped
	Swamp
X	Wooded
	Pond
	Waterfront
	Ravine
	Wetland
	Flood Plain
X	OPEN

Who	When	What
GLA	07/10/2019	INSPECTION
GLA	05/30/2017	INSPECTION

Land Value Estimates for Land Table 4010.LAND VALUES

Description	Frontage	Depth	* Factors * Front	Depth	Rate	%Adj.	Reason	Value
ACREAGE			36.210 Acres		2,722	100		98,564
ROW			1.790 Acres		0	100		0
			38.00 Total Acres		Total Est. Land Value =			98,564

Year	Land Value	Building Value	Assessed Value	Board of Review	Tribunal/ Other	Taxable Value
2024	49,300	10,400	59,700			26,261C
2023	44,000	8,400	52,400			25,011C
2022	35,500	7,000	42,500			23,820C
2021	31,300	6,100	37,400			23,060C

*** Information herein deemed reliable but not guaranteed***

Building Type

	Single Family
X	Mobile Home
	Town Home
	Duplex
	A-Frame

X	Wood Frame

Building Style: SWT/DWT

Yr Built	Remodeled
0	0

Condition: Good

Room List

	Basement
	1st Floor
	2nd Floor
	Bedrooms

(1) Exterior

	Wood/Shingle
X	Aluminum/Vinyl
	Brick
X	Insulation

(2) Windows

	Many		Large
X	Avg.	X	Avg.
	Few		Small

	Wood Sash
	Metal Sash
X	Vinyl Sash
	Double Hung
	Horiz. Slide
	Casement
	Double Glass
	Patio Doors
X	Storms & Screens

(3) Roof

X	Gable		Gambrel
	Hip		Mansard
	Flat		Shed

X	Asphalt Shingle

Chimney:

(3) Roof (cont.)

	Eavestrough
X	Insulation
0	Front Overhang
0	Other Overhang

(4) Interior

X	Drywall		Plaster
	Paneled		Wood T&G

Trim & Decoration

	Ex	X	Ord		Min

Size of Closets

	Lg	X	Ord		Small

Doors:		Solid	X	H.C.	

(5) Floors

Kitchen:
Other: Linoleum
Other: Carpeted

(6) Ceilings

X	Drywall		

(7) Excavation

Basement: 0 S.F.
Crawl: 0 S.F.
Slab: 0 S.F.
Height to Joists: 0.0

(8) Basement

	Conc. Block
	Poured Conc.
	Stone
	Treated Wood
	Concrete Floor

(9) Basement Finish

	Recreation	SF
	Living	SF
	Walkout Doors (B)	
	No Floor	SF
	Walkout Doors (A)	

(10) Floor Support

Joists:
Unsupported Len:
Cntr.Sup:

(11) Heating/Cooling

X	Gas		Oil		Elec.
	Wood		Coal		Steam

X	Forced Warm Air
	Wall Furnace
	Warm & Cool Air
	Heat Pump

	Central Air
	Wood Furnace

(12) Electric

150	Amps Service

No./Qual. of Fixtures

	Ex.	X	Ord.		Min

No. of Elec. Outlets

	Many	X	Ave.		Few

(13) Plumbing

	Average Fixture(s)
1	3 Fixture Bath
	2 Fixture Bath
	Softener, Auto
	Softener, Manual
	Solar Water Heat
	No Plumbing
	Extra Toilet
	Extra Sink
	Separate Shower
	Ceramic Tile Floor
	Ceramic Tile Wains
	Ceramic Tub Alcove
	Vent Fan

(14) Water/Sewer

	Public Water
	Public Sewer
1	Water Well
1	1000 Gal Septic
	2000 Gal Septic

Lump Sum Items:

(15) Built-ins

	Appliance Allow.
	Cook Top
	Dishwasher
	Garbage Disposal
	Bath Heater
	Vent Fan
	Hot Tub
	Unvented Hood
	Vented Hood
	Intercom
	Jacuzzi Tub
	Jacuzzi repl.Tub
	Oven
	Microwave
	Standard Range
	Self Clean Range
	Sauna
	Trash Compactor
	Central Vacuum
	Security System

(15) Fireplaces

	Interior 1 Story
	Interior 2 Story
	2nd/Same Stack
	Two Sided
	Exterior 1 Story
	Exterior 2 Story
	Prefab 1 Story
	Prefab 2 Story
	Heat Circulator
	Raised Hearth
	Wood Stove
	Direct-Vented Gas

Class: Low
Effec. Age: 25
Floor Area:
Total Base New : 62,107 E.C.F.
Total Depr Cost: 10,969 X 1.297
Estimated T.C.V: 14,227

(16) Porches/Decks

Area	Type
144	WGEP (1 Story)
160	Treated Wood

(17) Garage

Year Built:
Car Capacity:
Class:
Exterior:
Brick Ven.:
Stone Ven.:
Common Wall:
Foundation:
Finished ?:
Auto. Doors:
Mech. Doors:
Area:
% Good:
Storage Area:
No Conc. Floor:

Bsmnt Garage:

Carport Area:
Roof:

Cost Est. for Res. Bldg: 1 Mobile Home SWT/DWT Cls Low Blt 0
(11) Heating System: Wall Furnace
Ground Area = 720 SF Floor Area = 720 SF.
Phy/Ab.Phy/Func/Econ/Comb. % Good=35/100/100/50/17.5
Economic Depreciation because of: NEEDS WORK
Building Areas

Type	Ext. Walls	Roof/Fnd.	Size	Cost New	Depr. Cost	
Main Home	Ribbed	Metal	720			
			Total:	37,369	6,539	
Other Additions/Adjustments						
Skirting, Metal or Vinyl, Vertical			66	717	125	
Water/Sewer						
1000 Gal Septic			1	4,293	751	
Water Well, 100 Feet			1	5,545	970	
Porches						
WGEP (1 Story)			144	8,467	1,482	
Deck						
Treated Wood			160	3,446	603	
Local Cost Items						
WOOD LEAN TO DIRT			528	2,270	499	*4
			Totals:	62,107	10,969	

Notes:
ECF (RESIDENTIAL) 1.297 => TCV: 14,227

*** Information herein deemed reliable but not guaranteed***

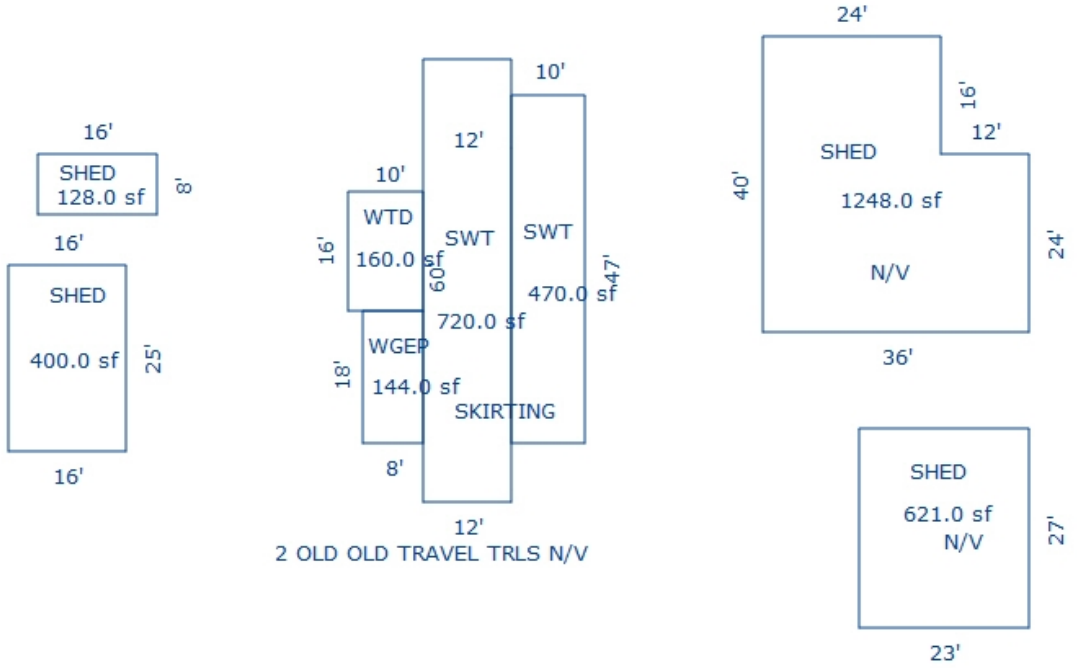

Sketch by Apex Sketch

*** Information herein deemed reliable but not guaranteed***

Building Type

	Single Family
X	Mobile Home
	Town Home
	Duplex
	A-Frame

X	Wood Frame

Building Style: SWT/DWT

Yr Built	Remodeled
0	0

Condition: Good

Room List

	Basement
	1st Floor
	2nd Floor
	Bedrooms

(1) Exterior

	Wood/Shingle
X	Aluminum/Vinyl
	Brick
X	Insulation

(2) Windows

	Many		Large
X	Avg.	X	Avg.
	Few		Small

	Wood Sash
	Metal Sash
X	Vinyl Sash
	Double Hung
	Horiz. Slide
	Casement
	Double Glass
	Patio Doors
X	Storms & Screens

(3) Roof

X	Gable		Gambrel
	Hip		Mansard
	Flat		Shed

X	Asphalt Shingle

Chimney:

(3) Roof (cont.)

	Eavestrough
X	Insulation
0	Front Overhang
0	Other Overhang

(4) Interior

X	Drywall		Plaster
	Paneled		Wood T&G

Trim & Decoration

	Ex	X	Ord		Min

Size of Closets

	Lg	X	Ord		Small

Doors:		Solid	X	H.C.	

(5) Floors

Kitchen:
Other: Linoleum
Other: Carpeted

(6) Ceilings

X	Drywall		

(7) Excavation

Basement: 0 S.F.
Crawl: 0 S.F.
Slab: 0 S.F.
Height to Joists: 0.0

(8) Basement

	Conc. Block
	Poured Conc.
	Stone
	Treated Wood
	Concrete Floor

(9) Basement Finish

	Recreation SF
	Living SF
	Walkout Doors (B)
	No Floor SF
	Walkout Doors (A)

(10) Floor Support

Joists:
Unsupported Len:
Cntr.Sup:

(11) Heating/Cooling

X	Gas		Oil		Elec.
	Wood		Coal		Steam

X	Forced Warm Air
	Wall Furnace
	Warm & Cool Air
	Heat Pump

	Central Air
	Wood Furnace

(12) Electric

150	Amps Service

No./Qual. of Fixtures

	Ex.	X	Ord.		Min

No. of Elec. Outlets

	Many	X	Ave.		Few

(13) Plumbing

1	Average Fixture(s)
	3 Fixture Bath
	2 Fixture Bath
	Softener, Auto
	Softener, Manual
	Solar Water Heat
	No Plumbing
	Extra Toilet
	Extra Sink
	Separate Shower
	Ceramic Tile Floor
	Ceramic Tile Wains
	Ceramic Tub Alcove
	Vent Fan

(14) Water/Sewer

	Public Water
	Public Sewer
	Water Well
	1000 Gal Septic
	2000 Gal Septic

Lump Sum Items:

(15) Built-ins

	Appliance Allow.
	Cook Top
	Dishwasher
	Garbage Disposal
	Bath Heater
	Vent Fan
	Hot Tub
	Unvented Hood
	Vented Hood
	Intercom
	Jacuzzi Tub
	Jacuzzi repl.Tub
	Oven
	Microwave
	Standard Range
	Self Clean Range
	Sauna
	Trash Compactor
	Central Vacuum
	Security System

(15) Fireplaces

	Interior 1 Story
	Interior 2 Story
	2nd/Same Stack
	Two Sided
	Exterior 1 Story
	Exterior 2 Story
	Prefab 1 Story
	Prefab 2 Story
	Heat Circulator
	Raised Hearth
	Wood Stove
	Direct-Vented Gas

Class: Low
Effec. Age: 25
Floor Area:
Total Base New : 28,778 E.C.F.
Total Depr Cost: 5,036 X 1.297
Estimated T.C.V: 6,532

(16) Porches/Decks

Area	Type

(17) Garage

Year Built:
Car Capacity:
Class:
Exterior:
Brick Ven.:
Stone Ven.:
Common Wall:
Foundation:
Finished ?:
Auto. Doors:
Mech. Doors:
Area:
% Good:
Storage Area:
No Conc. Floor:

Bsmnt Garage:

Carport Area:
Roof:

Cost Est. for Res. Bldg: 2 Mobile Home SWT/DWT Cls Low Blt 0
(11) Heating System: Wall Furnace
Ground Area = 470 SF Floor Area = 470 SF.
Phy/Ab.Phy/Func/Econ/Comb. % Good=35/100/100/50/17.5
Economic Depreciation because of: NEEDS WORK
Building Areas

Type	Ext. Walls	Roof/Fnd.	Size	Cost New	Depr. Cost
Main Home	Ribbed	Metal	470		
			Total:	28,778	5,036

Other Additions/Adjustments

Totals:	28,778	5,036

Notes:

ECF (RESIDENTIAL) 1.297 => TCV: 6,532

*** Information herein deemed reliable but not guaranteed***

Parcel Number: 2410-25-3302 Jurisdiction: GREENWOOD TWP County: WEXFORD Printed on 02/15/2024

Grantor	Grantee	Sale Price	Sale Date	Inst. Type	Terms of Sale	Liber & Page	Verified By	Prcnt. Trans.
GRAY, DIANA L TRUST	SPANGLER, DANIEL R	0	01/26/2021	OTH	08-ESTATE	689/488	AGENT	100.0
SPANGLER, DANIEL R	SPANGLER, DANIEL R & LISA	0	01/26/2021	WD	21-NOT USED/OTHER	689/834	AGENT	0.0
SPANGLER, RAYMOND G & LUCI	GRAY, DIANA L TRUSTEE	0	08/16/2020	WD	09-FAMILY	689/488	AGENT	0.0
SPANGLER, RAYMOND G & LUCI	SPANGLER, RAYMOND G & LUCI	0	12/14/2010	WD	18-LIFE ESTATE	636/856	DEED	0.0

Property Address

5211 E 12 RD

Owner's Name/Address

SPANGLER, DANIEL R & LISA
14420 128TH AVE
GRAND HAVEN MI 49417

Tax Description

S 417.5 FT OF E 208.75 FT OF SW 1/4 OF SW 1/4 --2 A. M/L-- GW. SEC. 25 T24N R10W -MANTON-

Comments/Influences

The Equalizer. Copyright (c) 1999 - 2009. Licensed To: Township of Greenwood, County of Wexford, Michigan

Class: RESIDENTIAL-IMPROV Zoning:

School: MANTON CONSOLIDATED SCHOOLS

P.R.E. 0%

:

2024 Est TCV 98,928 TCV/TFA: 93.06

Building Permit(s)	Date	Number	Status
RESIDENTIAL - REMODEL	04/24/2000	PB9603	

X	Improved		Vacant

	Public Improvements
	Dirt Road
X	Gravel Road
	Paved Road
	Storm Sewer
	Sidewalk
	Water
	Sewer
X	Electric
	Gas
	Curb
	Street Lights
	Standard Utilities
	Underground Utils.

	Topography of Site
	Level
X	Rolling
	Low
	High
	Landscaped
	Swamp
X	Wooded
	Pond
	Waterfront
	Ravine
	Wetland
	Flood Plain
X	OPEN

Who	When	What
GLA	07/10/2019	INSPECTION
GLA	05/30/2017	INSPECTION

Land Value Estimates for Land Table 4010.LAND VALUES

Description	Frontage	Depth	* Factors * Front	Depth	Rate	%Adj.	Reason	Value
ACREAGE			1.850 Acres		6,861	100		12,693
ROW			0.150 Acres		0	100		0
			2.00 Total Acres		Total Est. Land Value =			12,693

Year	Land Value	Building Value	Assessed Value	Board of Review	Tribunal/ Other	Taxable Value
2024	6,300	43,200	49,500			21,621C
2023	5,200	34,700	39,900			20,592C
2022	4,300	29,500	33,800		33,800A	19,612C
2021	4,800	30,200	35,000			18,986C

*** Information herein deemed reliable but not guaranteed***

Building Type

X	Single Family
	Mobile Home
	Town Home
	Duplex
	A-Frame
X	Wood Frame

Building Style: PLAIN

Yr Built	Remodeled
0	0

Condition: Good

Room List

	Basement
	1st Floor
	2nd Floor
	Bedrooms

(1) Exterior

X	Wood/Shingle
	Aluminum/Vinyl
	Brick
X	Insulation

(2) Windows

	Many		Large
X	Avg.	X	Avg.
	Few		Small

X	Wood Sash
	Metal Sash
	Vinyl Sash
	Double Hung
	Horiz. Slide
	Casement
	Double Glass
	Patio Doors
X	Storms & Screens

(3) Roof

X	Gable		Gambrel
	Hip		Mansard
	Flat		Shed

X	Asphalt Shingle

Chimney:

(3) Roof (cont.)

	Eavestrough
X	Insulation
0	Front Overhang
0	Other Overhang

(4) Interior

X	Drywall		Plaster
	Paneled		Wood T&G

Trim & Decoration

	Ex	X	Ord		Min

Size of Closets

	Lg	X	Ord		Small

Doors:		Solid	X	H.C.	

(5) Floors

Kitchen:
Other: Linoleum
Other: Carpeted

(6) Ceilings

X	Drywall		

(7) Excavation

Basement: 0 S.F.
Crawl: 775 S.F.
Slab: 288 S.F.
Height to Joists: 0.0

(8) Basement

	Conc. Block
	Poured Conc.
	Stone
	Treated Wood
	Concrete Floor

(9) Basement Finish

	Recreation	SF
	Living	SF
	Walkout Doors (B)	
	No Floor	SF
	Walkout Doors (A)	

(10) Floor Support

Joists:
Unsupported Len:
Cntr.Sup:

(11) Heating/Cooling

X	Gas		Oil		Elec.
	Wood		Coal		Steam

	Forced Air w/o Ducts
X	Forced Air w/ Ducts
	Forced Hot Water
	Electric Baseboard
	Elec. Ceil. Radiant
	Radiant (in-floor)
	Electric Wall Heat
	Space Heater
	Wall/Floor Furnace
	Forced Heat & Cool
	Heat Pump
	No Heating/Cooling
	Central Air
	Wood Furnace

(12) Electric

150	Amps Service

No./Qual. of Fixtures

	Ex.	X	Ord.		Min

No. of Elec. Outlets

	Many	X	Ave.		Few

(13) Plumbing

1	Average Fixture(s)
	3 Fixture Bath
	2 Fixture Bath
	Softener, Auto
	Softener, Manual
	Solar Water Heat
	No Plumbing
	Extra Toilet
	Extra Sink
	Separate Shower
	Ceramic Tile Floor
	Ceramic Tile Wains
	Ceramic Tub Alcove
	Vent Fan

(14) Water/Sewer

	Public Water
	Public Sewer
1	Water Well
1	1000 Gal Septic
	2000 Gal Septic

Lump Sum Items:
768

(15) Built-ins

	Appliance Allow.
	Cook Top
	Dishwasher
	Garbage Disposal
	Bath Heater
	Vent Fan
	Hot Tub
	Unvented Hood
	Vented Hood
	Intercom
	Jacuzzi Tub
	Jacuzzi repl.Tub
	Oven
	Microwave
	Standard Range
	Self Clean Range
	Sauna
	Trash Compactor
	Central Vacuum
	Security System

(15) Fireplaces

	Interior 1 Story
	Interior 2 Story
	2nd/Same Stack
	Two Sided
	Exterior 1 Story
	Exterior 2 Story
	Prefab 1 Story
	Prefab 2 Story
	Heat Circulator
	Raised Hearth
	Wood Stove
	Direct-Vented Gas

Class: CD
Effec. Age: 56
Floor Area: 1,063
Total Base New : 147,756 E.C.F.
Total Depr Cost: 66,488 X 1.297
Estimated T.C.V: 86,235

(16) Porches/Decks

Area	Type
112	WCP (1 Story)
48	WGEP (1 Story)
60	Treated Wood

(17) Garage

Year Built:
Car Capacity:
Class:
Exterior:
Brick Ven.:
Stone Ven.:
Common Wall:
Foundation:
Finished ?:
Auto. Doors:
Mech. Doors:
Area:
% Good:
Storage Area:
No Conc. Floor:

Bsmnt Garage:

Carport Area:
Roof:

Cost Est. for Res. Bldg: 1 Single Family PLAIN Cls CD Blt 0
(11) Heating System: Forced Air w/ Ducts
Ground Area = 1063 SF Floor Area = 1063 SF.
Phy/Ab.Phy/Func/Econ/Comb. % Good=45/100/100/100/45
Building Areas

Stories	Exterior	Foundation	Size	Cost New	Depr. Cost
1 Story	Siding	Crawl Space	775		
1 Story	Siding	Slab	288		
			Total:	124,183	55,880
Other Additions/Adjustments					
Water/Sewer					
1000 Gal Septic			1	4,582	2,062
Water Well, 100 Feet			1	5,680	2,556
Porches					
WCP (1 Story)			112	4,738	2,132
WGEP (1 Story)			48	5,495	2,473
Deck					
Treated Wood			60	1,926	867
Lump Sum Items					
OLD BARN				1,152	518
			Totals:	147,756	66,488

Notes:

ECF (RESIDENTIAL) 1.297 => TCV: 86,235

*** Information herein deemed reliable but not guaranteed***

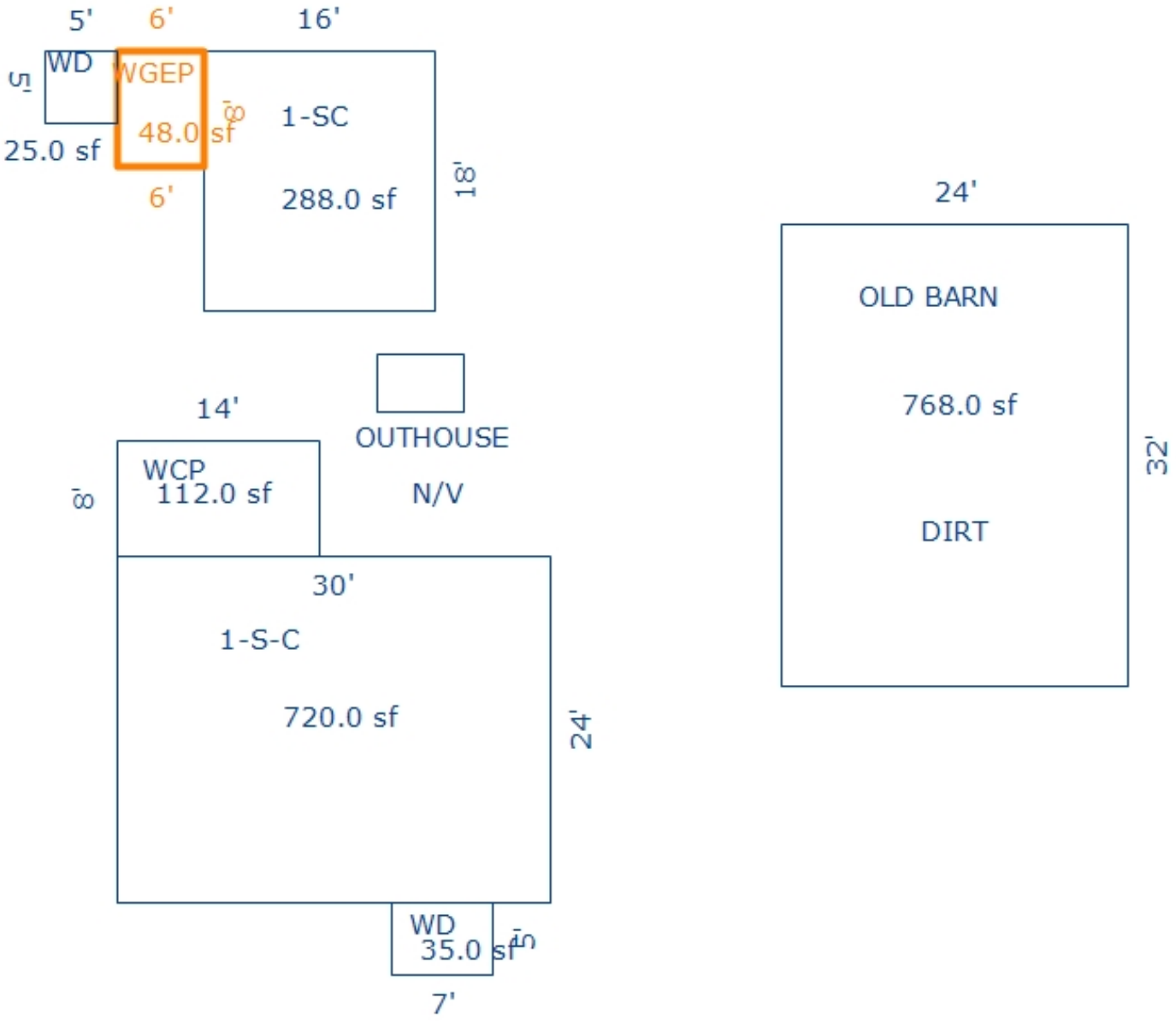

*** Information herein deemed reliable but not guaranteed***

Parcel Number: 2410-25-3402 Jurisdiction: GREENWOOD TWP County: WEXFORD Printed on 02/15/2024

Grantor	Grantee	Sale Price	Sale Date	Inst. Type	Terms of Sale	Liber & Page	Verified By	Prcnt. Trans.

Property Address	Class: AGRICULTURAL-IMPRO	Zoning:	Building Permit(s)	Date	Number	Status
5435 E 12 RD	School: MANTON CONSOLIDATED SCHOOLS					
	P.R.E. 100% 09/08/2023 Qual. Ag.					
Owner's Name/Address	:					
THOMPSON, HIRAM N & SHERRY M LE 5435 E 12 RD MANTON MI 49663	2024 Est TCV 189,977 TCV/TFA: 113.08					

X Improved | Vacant

Land Value Estimates for Land Table 1010.AG

Description	Frontage	Depth	* Factors * Front	Depth	Rate	%Adj.	Reason	Value
AG LAND	20 ACRES		20.00 Acres		2690	100		53,800
			20.00 Total Acres		Total Est. Land Value =			53,800

Land Improvement Cost Estimates

Description	Rate	Size	% Good	Cash Value
D/W/P: 3.5 Concrete	7.05	288	48	974
Total Estimated Land Improvements True Cash Value =				974

Public Improvements

- Dirt Road
- Gravel Road
- Paved Road
- Storm Sewer
- Sidewalk
- Water
- Sewer
- Electric
- Gas
- Curb
- Street Lights
- Standard Utilities
- Underground Utils.

Topography of Site

- Level
- Rolling
- Low
- High
- Landscaped
- Swamp
- Wooded
- Pond
- Waterfront
- Ravine
- Wetland
- Flood Plain

Tax Description

PART OF THE SOUTHWEST ONE-QUARTER OF SECTION 25, TOWN 24 NORTH, RANGE 10 WEST, MORE FULLY DESCRIBED AS: BEGINNING AT THE SOUTH ONE-QUARTER CORNER OF SAID SECTION 25; THENCE NORTH 89°52'58" WEST, ALONG THE SOUTH LINE OF SAID SECTION, 678. 78 FEET; THENCE NORTH 02°28'42" EAST, 1284. 77 FEET, TO THE SOUTH ONE-EIGHTH LINE OF SAID SECTION; THENCE SOUTH 89°52'00" EAST ALONG SAID SOUTH ONE-EIGHTH LINE, 678.77 FEET, TO THE NORTH AND SOUTH ONE-QUARTER LINE OF SAID SECTION; THENCE

Who	When	What

Year	Land Value	Building Value	Assessed Value	Board of Review	Tribunal/ Other	Taxable Value
2024	26,900	68,100	95,000			56,049C
2023	0	0	0			0
2022	0	0	0			0
2021	0	0	0			0

The Equalizer. Copyright (c) 1999 - 2009. Licensed To: Township of Greenwood, County of Wexford, Michigan

*** Information herein deemed reliable but not guaranteed***

Building Type

X	Single Family
	Mobile Home
	Town Home
	Duplex
	A-Frame
X	Wood Frame

Building Style: RANCH

Yr Built	Remodeled
0	0

Condition: Average

Room List

	Basement
	1st Floor
	2nd Floor
	Bedrooms

(1) Exterior

	Wood/Shingle
	Aluminum/Vinyl
	Brick
X	Vinyl
	Insulation

(2) Windows

X	Many Avg. Few	X	Large Avg. Small

	Wood Sash
	Metal Sash
X	Vinyl Sash
X	Double Hung
	Horiz. Slide
	Casement
	Double Glass
	Patio Doors
X	Storms & Screens

(3) Roof

X	Gable		Gambrel
	Hip		Mansard
	Flat		Shed

X	Asphalt Shingle

Chimney:

(3) Roof (cont.)

	Eavestrough
	Insulation
0	Front Overhang
0	Other Overhang

(4) Interior

	Drywall Paneled		Plaster Wood T&G

Trim & Decoration

	Ex	X	Ord		Min

Size of Closets

	Lg	X	Ord		Small

Doors:		Solid	X	H.C.	

(5) Floors

Kitchen:
Other:
Other:

(6) Ceilings

(7) Excavation

Basement: 1120 S.F.
Crawl: 560 S.F.
Slab: 0 S.F.
Height to Joists: 0.0

(8) Basement

	Conc. Block
	Poured Conc.
	Stone
	Treated Wood
	Concrete Floor

(9) Basement Finish

	Recreation	SF
1100	Living	SF
1	Walkout Doors (B)	
	No Floor	SF
	Walkout Doors (A)	

(10) Floor Support

Joists:
Unsupported Len:
Cntr.Sup:

(11) Heating/Cooling

X	Gas		Oil		Elec.
	Wood		Coal		Steam

	Forced Air w/o Ducts
X	Forced Air w/ Ducts
	Forced Hot Water
	Electric Baseboard
	Elec. Ceil. Radiant
	Radiant (in-floor)
	Electric Wall Heat
	Space Heater
	Wall/Floor Furnace
	Forced Heat & Cool
	Heat Pump
	No Heating/Cooling

	Central Air
	Wood Furnace

(12) Electric

0	Amps Service

No./Qual. of Fixtures

	Ex.	X	Ord.		Min

No. of Elec. Outlets

	Many	X	Ave.		Few

(13) Plumbing

	Average Fixture(s)
2	3 Fixture Bath
	2 Fixture Bath
	Softener, Auto
	Softener, Manual
	Solar Water Heat
	No Plumbing
	Extra Toilet
	Extra Sink
	Separate Shower
	Ceramic Tile Floor
	Ceramic Tile Wains
	Ceramic Tub Alcove
	Vent Fan

(14) Water/Sewer

	Public Water
	Public Sewer
1	Water Well
1	1000 Gal Septic
	2000 Gal Septic

Lump Sum Items:

(15) Built-ins

	Appliance Allow.
	Cook Top
	Dishwasher
	Garbage Disposal
	Bath Heater
	Vent Fan
	Hot Tub
	Unvented Hood
	Vented Hood
	Intercom
	Jacuzzi Tub
	Jacuzzi repl.Tub
	Oven
	Microwave
	Standard Range
	Self Clean Range
	Sauna
	Trash Compactor
	Central Vacuum
	Security System

(15) Fireplaces

	Interior 1 Story
	Interior 2 Story
	2nd/Same Stack
	Two Sided
	Exterior 1 Story
	Exterior 2 Story
	Prefab 1 Story
	Prefab 2 Story
	Heat Circulator
	Raised Hearth
	Wood Stove
	Direct-Vented Gas

Class: CD
Effec. Age: 49
Floor Area: 1,680
Total Base New : 264,454 E.C.F.
Total Depr Cost: 134,692 X 0.946
Estimated T.C.V: 127,419

(16) Porches/Decks

Area	Type
240	WPP

(17) Garage

Year Built:
Car Capacity:
Class:
Exterior:
Brick Ven.:
Stone Ven.:
Common Wall:
Foundation:
Finished ?:
Auto. Doors:
Mech. Doors:
Area:
% Good:
Storage Area:
No Conc. Floor:

Bsmnt Garage:

Carport Area:
Roof:

Cost Est. for Res. Bldg: 1 Single Family RANCH Cls CD Blt 0
(11) Heating System: Forced Air w/ Ducts
Ground Area = 1680 SF Floor Area = 1680 SF.
Phy/Ab.Phy/Func/Econ/Comb. % Good=51/100/100/100/51
Building Areas

Stories	Exterior	Foundation	Size	Cost New	Depr. Cost	
1 Story	Siding	Basement	1,120			
1 Story	Siding	Crawl Space	560			
			Total:	204,151	104,116	
Other Additions/Adjustments						
Basement Living Area			1100	37,037	18,889	
Basement, Outside Entrance, Below Grade			1	2,176	1,110	
Plumbing						
3 Fixture Bath			1	3,887	1,982	
Water/Sewer						
1000 Gal Septic			1	4,582	2,337	
Water Well, 100 Feet			1	5,680	2,897	
Porches						
WPP			240	4,378	2,233	
Local Cost Items						
WOOD LEAN TO DIRT			596	2,563	1,128	*4
			Totals:	264,454	134,692	

Notes:

ECF (AG) 0.946 => TCV: 127,419

*** Information herein deemed reliable but not guaranteed***

Building Type	Farm Implement/Equipment	Farm Implement/Equipment	Barn - General Purpose		
Year Built					
Class/Construction	D,Pole	D,Pole	D,Frame		
Quality/Exterior	Low Cost	Low Cost	Low Cost		
# of Walls, Perimeter	4 Wall, 168	4 Wall, 80	4 Wall, 184		
Height	10	8	10		
Heating System	No Heating/Cooling	No Heating/Cooling	No Heating/Cooling		
Length/Width/Area	50 x 34 = 1700	20 x 20 = 400	62 x 30 = 1860		
Cost New	$ 7,582	$ 2,200	$ 47,170		
Phy./Func./Econ. %Good	60/100/100 60.0	60/100/100 60.0	20/25/100 5.0		
Depreciated Cost	$ 4,549	$ 1,320	$ 2,359		
+ Unit-In-Place Items	$ 0	$ 0	$ 0		
Description, Size X Rate X %Good = Cost Itemized -> Unit-In-Place -> Items ->					
E.C.F.	X 0.946	X 0.946	X 0.946		
% Good	60	60	20		
Est. True Cash Value	$ 4,304	$ 1,249	$ 2,231		
Comments:					
Total Estimated True Cash Value of Agricultural Improvements / This Card: 7784 / All Cards: 7784					

*** Information herein deemed reliable but not guaranteed***

Parcel Number: 2410-25-3403 Jurisdiction: GREENWOOD TWP County: WEXFORD Printed on 02/15/2024

Grantor	Grantee	Sale Price	Sale Date	Inst. Type	Terms of Sale	Liber & Page	Verified By	Prcnt. Trans.
THOMPSON, HIRAM N & SHERRY	RICHARDSON KATELYN	0	09/28/2023	QC	21-NOT USED/OTHER	696/664	DEED	100.0

Property Address

E 12 RD

Owner's Name/Address

RICHARDSON KATELYN
5435 E 12 RD
MANTON MI 49663

Class: AGRICULTURAL-VACAN Zoning:

School: MANTON CONSOLIDATED SCHOOLS

P.R.E. 100% 09/08/2023 Qual. Ag.

:

2024 Est TCV 47,721

Building Permit(s)	Date	Number	Status

Improved | X | Vacant

Public Improvements

Dirt Road
Gravel Road
Paved Road
Storm Sewer
Sidewalk
Water
Sewer
Electric
Gas
Curb
Street Lights
Standard Utilities
Underground Utils.

Topography of Site

Level
Rolling
Low
High
Landscaped
Swamp
Wooded
Pond
Waterfront
Ravine
Wetland
Flood Plain

Who When What

Land Value Estimates for Land Table 1010.AG

Description	Frontage	Depth	* Factors * Front	Depth	Rate	%Adj.	Reason	Value
AG LAND	20 ACRES		17.74 Acres		2690	100		47,721
			17.74 Total Acres		Total Est. Land Value =			47,721

Tax Description

PART OF THE SOUTHWEST ONE-QUARTER OF SECTION 25, TOWN 24 NORTH, RANGE 10 WEST, MORE FULLY DESCRIBED AS:
COMMENCING AT THE SOUTH ONE-QUARTER CORNER OF SAID SECTION 25; THENCE NORTH 89°52'58" WEST, ALONG THE SOUTH LINE OF SAID SECTION, 678.78 FEET, TO THE POINT OF BEGINNING; THENCE NORTH 89°52'58" WEST CONTINUING ALONG SAID SOUTH LINE, 600.36 FEET, TO THE WEST ONE-EIGHTH LINE OF SAID SECTION; THENCE NORTH 02°19'25" EAST, ALONG SAID WEST ONE-EIGHTH LINE, 1284.79 FEET, TO THE SOUTH ONE-EIGHTH LINE OF SAID SECTION; THENCE SOUTH 89°52'00" EAST ALONG SAID SOUTH ONE-EIGHTH LINE, 603.83 FEET; THENCE SOUTH 02°28'42" WEST, 1284.77 FEET, TO THE POINT OF BEGINNING. SAID PARCEL CONTAINS 17.74 ACRES, MORE OR LESS.
SUBJECT TO ALL AGREEMENTS, COVENANTS, EASEMENTS, RIGHT-OF-WAYS, RESERVATIONS
BALANCE OF DESCRIPTION ON FILE

Comments/Influences

Split/Comb. on 09/08/2023 completed / / DBROWN SPLIT ;
Parent Parcel(s): 2410-25-3401;
Child Parcel(s): 2410-25-3402, 2410-25-3403;

The Equalizer. Copyright (c) 1999 - 2009. Licensed To: Township of Greenwood, County of Wexford, Michigan

Year	Land Value	Building Value	Assessed Value	Board of Review	Tribunal/ Other	Taxable Value
2024	23,900	0	23,900			23,900S
2023	0	0	0			0
2022	0	0	0			0
2021	0	0	0			0

*** Information herein deemed reliable but not guaranteed***

Parcel Number: 2410-25-4101 Jurisdiction: GREENWOOD TWP County: WEXFORD Printed on 02/15/2024

Grantor	Grantee	Sale Price	Sale Date	Inst. Type	Terms of Sale	Liber & Page	Verified By	Prcnt. Trans.
POWELL, MARVIN & RUTH ANN	MDOT	146,000	03/30/2001	WD	03-ARM'S LENGTH	379:849	DEED	0.0

Property Address

Owner's Name/Address

MDOT
P O BOX 30050
LANSING MI 48909

Tax Description

E 1/2 OF SE 1/4 EXC W 200 FT OF SE 1/4 OF SE 1/4 & EXC W 300 FT OF S 520 FT OF SE 1/4 OF SE 1/4 -SUB TO EASMT- 72.75 A M/LSUB TO CONSERVATION EASMT 629/2611-- GW SEC 25 T24N R10W -MANTON- [[ASSESSED W/ 25-1401 '01

Comments/Influences

The Equalizer. Copyright (c) 1999 - 2009.
Licensed To: Township of Greenwood, County of Wexford, Michigan

Class: RESIDENTIAL-VACANT Zoning:

School: MANTON CONSOLIDATED SCHOOLS

P.R.E. 0%

:

2024 Est TCV 0

Building Permit(s)	Date	Number	Status

	Improved	X	Vacant

	Public Improvements
X	Dirt Road
X	Gravel Road
X	Paved Road
	Storm Sewer
	Sidewalk
	Water
	Sewer
	Electric
	Gas
	Curb
	Street Lights
	Standard Utilities
	Underground Utils.

	Topography of Site
	Level
X	Rolling
	Low
	High
	Landscaped
	Swamp
X	Wooded
	Pond
	Waterfront
	Ravine
	Wetland
	Flood Plain
X	OPEN/PINES

Who	When	What
GLA	07/10/2019	INSPECTION
GLA	05/30/2017	INSPECTION

Land Value Estimates for Land Table 4010.LAND VALUES

Description	Frontage	Depth	* Factors * Front	Depth	Rate	%Adj.	Reason	Value
ACREAGE			70.060 Acres		2,583	100		180,994
ROW			2.690 Acres		0	100		0
			72.75 Total Acres		Total Est. Land Value =			180,994

Year	Land Value	Building Value	Assessed Value	Board of Review	Tribunal/ Other	Taxable Value
2024	EXEMPT	EXEMPT	EXEMPT			EXEMPT
2023	EXEMPT	EXEMPT	EXEMPT			EXEMPT
2022	0	0	0			0
2021	0	0	0			0

*** Information herein deemed reliable but not guaranteed***

Parcel Number: 2410-25-4201 Jurisdiction: GREENWOOD TWP County: WEXFORD Printed on 02/15/2024

Grantor	Grantee	Sale Price	Sale Date	Inst. Type	Terms of Sale	Liber & Page	Verified By	Prcnt. Trans.
BATY, KEVIN R	FOUNTAIN, ROBERT W	100	10/04/2018	QC	21-NOT USED/OTHER	6832/853	DEED	0.0
POWELL, MARVIN W.	FOUNTAIN ET AL, ROBERT W.	20,000	06/07/1994	WD	03-ARM'S LENGTH	339:858	DEED	0.0

Property Address

Owner's Name/Address

FOUNTAIN, ROBERT W
1014 E LAKE MITCHELL DR
CADILLAC MI 49601

Tax Description

W 1/2 OF SE 1/4 EXC E 100 FT OF S 1216 FT THEREOF. 77.21 A. G.W. SEC. 25 T24N R10W -MANTON-

Comments/Influences

The Equalizer. Copyright (c) 1999 - 2009. Licensed To: Township of Greenwood, County of Wexford, Michigan

Class: AGRICULTURAL-VACAN Zoning:

School: MANTON CONSOLIDATED SCHOOLS

P.R.E. 100% / / Qual. Ag.

:

2024 Est TCV 205,209

Building Permit(s)	Date	Number	Status

[ ] Improved [X] Vacant

Public Improvements

	Dirt Road
X	Gravel Road
X	Paved Road
	Storm Sewer
	Sidewalk
	Water
	Sewer
	Electric
	Gas
	Curb
	Street Lights
	Standard Utilities
	Underground Utils.

Topography of Site

	Level
X	Rolling
X	Low
	High
	Landscaped
	Swamp
X	Wooded
	Pond
	Waterfront
	Ravine
	Wetland
	Flood Plain
X	OPEN/PINES

Who	When	What
GLA	07/10/2019	INSPECTION
GLA	05/30/2017	INSPECTION

Land Value Estimates for Land Table 1010.AG

Description	Frontage	Depth	* Factors * Front	Depth	Rate	%Adj.	Reason	Value
AG LAND	80 ACRES		76.29 Acres		2690	100		205,209
AG LAND	ROW		0.92 Acres		0	100		0
			77.21 Total Acres		Total Est. Land Value =			205,209

Year	Land Value	Building Value	Assessed Value	Board of Review	Tribunal/ Other	Taxable Value
2024	102,600	0	102,600			26,542C
2023	76,300	0	76,300			25,279C
2022	68,700	0	68,700			24,076C
2021	64,800	0	64,800			23,307C

*** Information herein deemed reliable but not guaranteed***

Parcel Number: 2410-25-4401 Jurisdiction: GREENWOOD TWP County: WEXFORD Printed on 02/15/2024

Grantor	Grantee	Sale Price	Sale Date	Inst. Type	Terms of Sale	Liber & Page	Verified By	Prcnt. Trans.
THOMPSON	ARLT, AUSTIN	0	03/24/2022	LC	16-LC PAYOFF	692/1517	DEED	0.0
THOMPSON, HIRAM N & SHERRY	ARLT, AUSTIN	55,000	02/26/2020	LC	03-ARM'S LENGTH	6862503	DEED	100.0
THOMPSON, HIRAM N & SHERRY		0	11/19/2018	WD	21-NOT USED/OTHER	6832/517	DEED	0.0
THOMPSON, HIRAM N & SHERRY		0	11/18/2011	QC	05-CORRECTING TITLE	643/2225	DEED	0.0

Property Address

5751 E 12 RD

Owner's Name/Address

ARLT, AUSTIN
5751 E 12 RD
MANTON MI 49663

Tax Description

W 200 FT OF SE 1/4 OF SE 1/4 & W 300 FT OF S 520 FT OF SE 1/4 OF SE 1/4 & E 100 FT OF S 1216 FT OF W 1/2 OF SE 1/4- 10.04 A M/L-- GW SEC 25 T24N R10W -MANTON- [[ASSESSED W/ 25-1401 '01

Comments/Influences

The Equalizer. Copyright (c) 1999 - 2009.
Licensed To: Township of Greenwood, County of Wexford, Michigan

Class: RESIDENTIAL-IMPROV Zoning:

School: MANTON CONSOLIDATED SCHOOLS

P.R.E. 100% 03/05/2020

:

2024 Est TCV 182,552 TCV/TFA: 141.29

Building Permit(s)	Date	Number	Status

X	Improved		Vacant

	Public Improvements
X	Dirt Road
X	Gravel Road
	Paved Road
	Storm Sewer
	Sidewalk
	Water
	Sewer
	Electric
	Gas
	Curb
	Street Lights
	Standard Utilities
	Underground Utils.

	Topography of Site
	Level
X	Rolling
X	Low
X	High
	Landscaped
	Swamp
	Wooded
	Pond
	Waterfront
	Ravine
	Wetland
	Flood Plain
X	OPEN

Who	When	What
GLA	07/10/2019	INSPECTION
GLA	05/30/2017	INSPECTION
GLA	03/22/2014	INSPECTION

Land Value Estimates for Land Table 4010.LAND VALUES

Description	Frontage	Depth	* Factors * Front	Depth	Rate	%Adj.	Reason	Value
ACREAGE			9.813 Acres		4,656	100		45,691
ROW			0.227 Acres		0	100		0
			10.04 Total Acres		Total Est. Land Value =			45,691

Year	Land Value	Building Value	Assessed Value	Board of Review	Tribunal/ Other	Taxable Value
2024	22,800	68,500	91,300			63,724C
2023	12,900	55,100	68,000			60,690C
2022	11,900	45,900	57,800			57,800S
2021	12,000	45,800	57,800			57,800S

*** Information herein deemed reliable but not guaranteed***

Building Type

X	Single Family
	Mobile Home
	Town Home
	Duplex
	A-Frame
X	Wood Frame

Building Style: PLAIN

Yr Built	Remodeled
0	0

Condition: Good

Room List

	Basement
	1st Floor
	2nd Floor
	Bedrooms

(1) Exterior

	Wood/Shingle
X	Aluminum/Vinyl
	Brick
X	Insulation

(2) Windows

	Many		Large
X	Avg.	X	Avg.
	Few		Small

	Wood Sash
	Metal Sash
X	Vinyl Sash
	Double Hung
	Horiz. Slide
	Casement
	Double Glass
	Patio Doors
X	Storms & Screens

(3) Roof

X	Gable		Gambrel
	Hip		Mansard
	Flat		Shed

X	Asphalt Shingle

Chimney:

(3) Roof (cont.)

	Eavestrough
X	Insulation
0	Front Overhang
0	Other Overhang

(4) Interior

X	Drywall		Plaster
	Paneled		Wood T&G

Trim & Decoration

	Ex	X	Ord		Min

Size of Closets

	Lg	X	Ord		Small

Doors:		Solid	X	H.C.	

(5) Floors

Kitchen:
Other: Linoleum
Other: Carpeted

(6) Ceilings

X	Drywall		

(7) Excavation

Basement: 986 S.F.
Crawl: 0 S.F.
Slab: 0 S.F.
Height to Joists: 0.0

(8) Basement

	Conc. Block
	Poured Conc.
	Stone
	Treated Wood
	Concrete Floor

(9) Basement Finish

	Recreation SF
	Living SF
	Walkout Doors (B)
	No Floor SF
	Walkout Doors (A)

(10) Floor Support

Joists:
Unsupported Len:
Cntr.Sup:

(11) Heating/Cooling

X	Gas		Oil		Elec.
	Wood		Coal		Steam

	Forced Air w/o Ducts
X	Forced Air w/ Ducts
	Forced Hot Water
	Electric Baseboard
	Elec. Ceil. Radiant
	Radiant (in-floor)
	Electric Wall Heat
	Space Heater
	Wall/Floor Furnace
	Forced Heat & Cool
	Heat Pump
	No Heating/Cooling

	Central Air
	Wood Furnace

(12) Electric

150	Amps Service

No./Qual. of Fixtures

	Ex.	X	Ord.		Min

No. of Elec. Outlets

	Many	X	Ave.		Few

(13) Plumbing

	Average Fixture(s)
1	3 Fixture Bath
	2 Fixture Bath
	Softener, Auto
	Softener, Manual
	Solar Water Heat
	No Plumbing
	Extra Toilet
	Extra Sink
	Separate Shower
	Ceramic Tile Floor
	Ceramic Tile Wains
	Ceramic Tub Alcove
	Vent Fan

(14) Water/Sewer

	Public Water
	Public Sewer
1	Water Well
1	1000 Gal Septic
	2000 Gal Septic

Lump Sum Items:

(15) Built-ins

	Appliance Allow.
	Cook Top
	Dishwasher
	Garbage Disposal
	Bath Heater
	Vent Fan
	Hot Tub
	Unvented Hood
	Vented Hood
	Intercom
	Jacuzzi Tub
	Jacuzzi repl.Tub
	Oven
	Microwave
	Standard Range
	Self Clean Range
	Sauna
	Trash Compactor
	Central Vacuum
	Security System

(15) Fireplaces

	Interior 1 Story
	Interior 2 Story
	2nd/Same Stack
	Two Sided
	Exterior 1 Story
	Exterior 2 Story
	Prefab 1 Story
	Prefab 2 Story
	Heat Circulator
	Raised Hearth
	Wood Stove
	Direct-Vented Gas

Class: CD
Effec. Age: 59
Floor Area: 1,292
Total Base New : 234,491 E.C.F.
Total Depr Cost: 105,521 X 1.297
Estimated T.C.V: 136,861

(16) Porches/Decks

Area	Type
224	CCP (1 Story)
40	WGEP (1 Story)
24	CPP

(17) Garage

Year Built:
Car Capacity:
Class: CD
Exterior: Siding
Brick Ven.: 0
Stone Ven.: 0
Common Wall: 1 Wall
Foundation: 18 Inch
Finished ?:
Auto. Doors: 0
Mech. Doors: 0
Area: 528
% Good: 0
Storage Area: 0
No Conc. Floor: 0

Bsmnt Garage:

Carport Area:
Roof:

Cost Est. for Res. Bldg: 1 Single Family PLAIN Cls CD Blt 0
(11) Heating System: Forced Air w/ Ducts
Ground Area = 986 SF Floor Area = 1292 SF.
Phy/Ab.Phy/Func/Econ/Comb. % Good=45/100/100/100/45
Building Areas

Stories	Exterior	Foundation	Size	Cost New	Depr. Cost
1 Story	Siding	Basement	782		
2.5 Story	Siding	Basement	204		
			Total:	158,004	71,102
Other Additions/Adjustments					
Water/Sewer					
1000 Gal Septic			1	4,582	2,062
Water Well, 100 Feet			1	5,680	2,556
Porches					
CCP (1 Story)			224	5,322	2,395
WGEP (1 Story)			40	5,105	2,297
CPP			24	638	287
Garages					
Class: CD Exterior: Siding Foundation: 18 Inch (Unfinished)					
Base Cost			528	18,760	8,442
Common Wall: 1 Wall			1	-2,060	-927
Class: D Exterior: Pole (Unfinished)					
Base Cost			2000	38,460	17,307
			Totals:	234,491	105,521

Notes:
ECF (RESIDENTIAL) 1.297 => TCV: 136,861

*** Information herein deemed reliable but not guaranteed***

Old Barn on the Ground N/V
2 Round Corn Cribs N/V

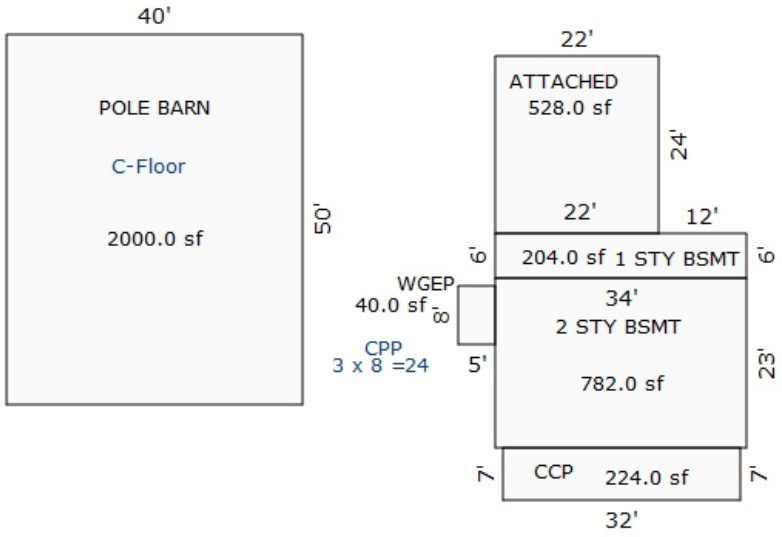

Sketch by Apex Sketch

*** Information herein deemed reliable but not guaranteed***

Parcel Number: 2410-26-1101 Jurisdiction: GREENWOOD TWP County: WEXFORD Printed on 02/15/2024

Grantor	Grantee	Sale Price	Sale Date	Inst. Type	Terms of Sale	Liber & Page	Verified By	Prcnt. Trans.
VANDERCOOK, TERRY L & KIMB	VANDERCOOK FAMILY TRUST NO	0	04/08/2015	QC	14-INTO/OUT OF TRUST	675/55	DEED	0.0
ZAGATA, PAUL E. & MARY KAY	VANDERCOOK, TERRY L & KIMB	203,000	09/14/2007	WD	03-ARM'S LENGTH	604/1193	DEED	100.0
NBD BANK, TRUSTEE	ZAGATA, PAUL & MARY K.	140,000	12/18/1996	OTH	25-PARTIAL CONSTRUCTION	352:966	DEED	0.0
CAN AMERICAN	TALBOT, MARION L.	14,000	09/03/1992	WD	03-ARM'S LENGTH	331:131	DEED	0.0

Property Address

7923 N 35 RD

Owner's Name/Address

VANDERCOOK FAMILY TRUST NO 1
7923 N 35 RD
MANTON MI 49663

Tax Description

NE 1/4 OF NE 1/4 40 A. GW. SEC. 26 T24N R10W -MANTON- [[COMBINED W/1102 '99

Comments/Influences

Class: RESIDENTIAL-IMPROV Zoning:

School: MANTON CONSOLIDATED SCHOOLS

P.R.E. 100% / /

:

2024 Est TCV 413,481 TCV/TFA: 237.22

Building Permit(s)	Date	Number	Status
OTHER	09/12/2019	PB19-0209	COMPLETE

X	Improved		Vacant

	Public Improvements
	Dirt Road
X	Gravel Road
X	Paved Road
	Storm Sewer
	Sidewalk
	Water
	Sewer
X	Electric
	Gas
	Curb
	Street Lights
	Standard Utilities
	Underground Utils.

	Topography of Site
	Level
X	Rolling
	Low
	High
	Landscaped
	Swamp
	Wooded
	Pond
	Waterfront
	Ravine
	Wetland
	Flood Plain

Who	When	What
GLA	07/10/2019	INSPECTION
GLA	07/10/2019	INSPECTION
GLA	03/22/2014	INSPECTION

Land Value Estimates for Land Table 4010.LAND VALUES

Description	Frontage	Depth	* Factors * Front	Depth	Rate	%Adj.	Reason	Value
ACREAGE			38.000 Acres		2,722	100		103,436
ROW			2.000 Acres		0	100		0
			40.00 Total Acres		Total Est. Land Value =			103,436

Land Improvement Cost Estimates

Description	Rate	Size	% Good	Cash Value
D/W/P: 4in Concrete	6.53	192	55	690
D/W/P: 4in Concrete	6.53	336	55	1,207
D/W/P: Asphalt Paving	2.91	2040	55	3,265
Total Estimated Land Improvements True Cash Value =				5,162

Year	Land Value	Building Value	Assessed Value	Board of Review	Tribunal/ Other	Taxable Value
2024	51,700	155,000	206,700			106,600C
2023	45,900	127,500	173,400			101,524C
2022	36,700	108,400	145,100			96,690C
2021	32,600	110,100	142,700			93,602C

The Equalizer. Copyright (c) 1999 - 2009.
Licensed To: Township of Greenwood, County of Wexford, Michigan

*** Information herein deemed reliable but not guaranteed***

Building Type

X	Single Family
	Mobile Home
	Town Home
	Duplex
	A-Frame
X	Wood Frame

Building Style: RANCH

Yr Built	Remodeled
1992	0

Condition: Good

Room List

	Basement
	1st Floor
	2nd Floor
	Bedrooms

(1) Exterior

	Wood/Shingle
	Aluminum/Vinyl
	Brick
X	Vinyl
	Insulation

(2) Windows

X	Many		Large
	Avg.	X	Avg.
	Few		Small

	Wood Sash
	Metal Sash
X	Vinyl Sash
X	Double Hung
	Horiz. Slide
	Casement
	Double Glass
X	Patio Doors
	Storms & Screens

(3) Roof

X	Gable		Gambrel
	Hip		Mansard
	Flat		Shed

X	Asphalt Shingle

Chimney:

(3) Roof (cont.)

	Eavestrough
	Insulation
0	Front Overhang
0	Other Overhang

(4) Interior

X	Drywall		Plaster
	Paneled		Wood T&G

Trim & Decoration

	Ex		Ord		Min

Size of Closets

	Lg		Ord		Small

Doors:		Solid		H.C.	

(5) Floors

Kitchen: Hardwood
Other: Hardwood
Other: Carpeted

(6) Ceilings

X	Drywall

(7) Excavation

Basement: 1743 S.F.
Crawl: 0 S.F.
Slab: 0 S.F.
Height to Joists: 0.0

(8) Basement

	Conc. Block
	Poured Conc.
	Stone
	Treated Wood
	Concrete Floor

(9) Basement Finish

	Recreation	SF
1743	Living	SF
	Walkout Doors (B)	
	No Floor	SF
	Walkout Doors (A)	

(10) Floor Support

Joists:
Unsupported Len:
Cntr.Sup:

(11) Heating/Cooling

X	Gas		Oil		Elec.
	Wood		Coal		Steam

	Forced Air w/o Ducts
X	Forced Air w/ Ducts
	Forced Hot Water
	Electric Baseboard
	Elec. Ceil. Radiant
	Radiant (in-floor)
	Electric Wall Heat
	Space Heater
	Wall/Floor Furnace
	Forced Heat & Cool
	Heat Pump
	No Heating/Cooling

	Central Air
	Wood Furnace

(12) Electric

200	Amps Service

No./Qual. of Fixtures

	Ex.	X	Ord.		Min

No. of Elec. Outlets

	Many	X	Ave.		Few

(13) Plumbing

	Average Fixture(s)
3	3 Fixture Bath
1	2 Fixture Bath
	Softener, Auto
	Softener, Manual
	Solar Water Heat
	No Plumbing
	Extra Toilet
	Extra Sink
	Separate Shower
	Ceramic Tile Floor
	Ceramic Tile Wains
	Ceramic Tub Alcove
	Vent Fan

(14) Water/Sewer

	Public Water
	Public Sewer
1	Water Well
1	1000 Gal Septic
	2000 Gal Septic

Lump Sum Items:

(15) Built-ins

	Appliance Allow.
	Cook Top
	Dishwasher
	Garbage Disposal
	Bath Heater
	Vent Fan
	Hot Tub
	Unvented Hood
	Vented Hood
	Intercom
	Jacuzzi Tub
	Jacuzzi repl.Tub
	Oven
	Microwave
	Standard Range
	Self Clean Range
	Sauna
	Trash Compactor
	Central Vacuum
	Security System

(15) Fireplaces

	Interior 1 Story
	Interior 2 Story
	2nd/Same Stack
	Two Sided
	Exterior 1 Story
	Exterior 2 Story
	Prefab 1 Story
	Prefab 2 Story
	Heat Circulator
	Raised Hearth
	Wood Stove
	Direct-Vented Gas

Class: C
Effec. Age: 44
Floor Area: 1,743
Total Base New : 389,798 E.C.F.
Total Depr Cost: 218,287 X 1.297
Estimated T.C.V: 283,118

(16) Porches/Decks

Area	Type
192	CPP
176	CCP (1 Story)
190	Treated Wood

(17) Garage

Year Built:
Car Capacity:
Class: C
Exterior: Siding
Brick Ven.: 0
Stone Ven.: 0
Common Wall: 1 Wall
Foundation: 42 Inch
Finished ?:
Auto. Doors: 0
Mech. Doors: 0
Area: 624
% Good: 0
Storage Area: 0
No Conc. Floor: 0

Bsmnt Garage:

Carport Area:
Roof:

Cost Est. for Res. Bldg: 1 Single Family RANCH Cls C Blt 1992
(11) Heating System: Forced Air w/ Ducts
Ground Area = 1743 SF Floor Area = 1743 SF.
Phy/Ab.Phy/Func/Econ/Comb. % Good=56/100/100/100/56

Building Areas

Stories	Exterior	Foundation	Size	Cost New	Depr. Cost
1 Story	Siding	Basement	1,743		
			Total:	246,983	138,311
Other Additions/Adjustments					
Basement Living Area			1743	62,940	35,246
Plumbing					
3 Fixture Bath			2	9,357	5,240
2 Fixture Bath			1	3,130	1,753
Water/Sewer					
1000 Gal Septic			1	4,899	2,743
Water Well, 100 Feet			1	5,849	3,275
Porches					
CPP			192	3,519	1,971
CCP (1 Story)			176	4,736	2,652
Deck					
Treated Wood			190	4,030	2,257
Garages					
Class: C Exterior: Siding Foundation: 42 Inch (Unfinished)					
Base Cost			624	26,401	14,785
Common Wall: 1 Wall			1	-2,705	-1,515
Class: C Exterior: Pole (Unfinished)					
Base Cost			768	20,659	11,569
			Totals:	389,798	218,287

Notes:

ECF (RESIDENTIAL) 1.297 => TCV: 283,118

*** Information herein deemed reliable but not guaranteed***

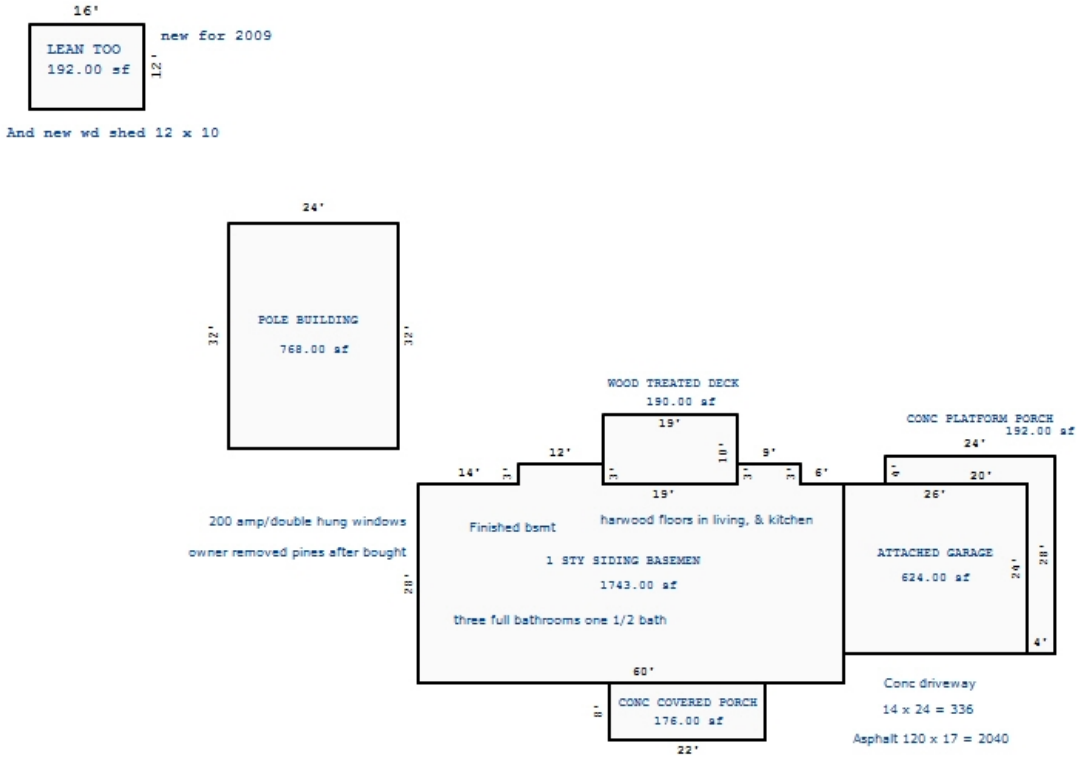

Sketch by Apex Sketch

*** Information herein deemed reliable but not guaranteed***

Building Type

X	Single Family
	Mobile Home
	Town Home
	Duplex
	A-Frame
X	Wood Frame

Building Style: PLAIN

Yr Built	Remodeled
0	0

Condition: Good

Room List

	Basement
	1st Floor
	2nd Floor
	Bedrooms

(1) Exterior

	Wood/Shingle
X	Aluminum/Vinyl
	Brick
X	Insulation

(2) Windows

	Many		Large
X	Avg.	X	Avg.
	Few		Small

	Wood Sash
	Metal Sash
X	Vinyl Sash
	Double Hung
	Horiz. Slide
	Casement
	Double Glass
	Patio Doors
X	Storms & Screens

(3) Roof

X	Gable		Gambrel
	Hip		Mansard
	Flat		Shed

X	Asphalt Shingle

Chimney:

(3) Roof (cont.)

	Eavestrough
X	Insulation
0	Front Overhang
0	Other Overhang

(4) Interior

X	Drywall		Plaster
	Paneled		Wood T&G

Trim & Decoration

	Ex	X	Ord		Min

Size of Closets

	Lg	X	Ord		Small

Doors:		Solid	X	H.C.	

(5) Floors

Kitchen:
Other: Linoleum
Other: Carpeted

(6) Ceilings

X	Drywall

(7) Excavation

Basement: 0 S.F.
Crawl: 0 S.F.
Slab: 0 S.F.
Height to Joists: 0.0

(8) Basement

	Conc. Block
	Poured Conc.
	Stone
	Treated Wood
	Concrete Floor

(9) Basement Finish

	Recreation SF
	Living SF
	Walkout Doors (B)
	No Floor SF
	Walkout Doors (A)

(10) Floor Support

Joists:
Unsupported Len:
Cntr.Sup:

(11) Heating/Cooling

X	Gas		Oil		Elec.
	Wood		Coal		Steam

	Forced Air w/o Ducts
X	Forced Air w/ Ducts
	Forced Hot Water
	Electric Baseboard
	Elec. Ceil. Radiant
	Radiant (in-floor)
	Electric Wall Heat
	Space Heater
	Wall/Floor Furnace
	Forced Heat & Cool
	Heat Pump
	No Heating/Cooling

	Central Air
	Wood Furnace

(12) Electric

150	Amps Service

No./Qual. of Fixtures

	Ex.	X	Ord.		Min

No. of Elec. Outlets

	Many	X	Ave.		Few

(13) Plumbing

1	Average Fixture(s)
	3 Fixture Bath
	2 Fixture Bath
	Softener, Auto
	Softener, Manual
	Solar Water Heat
	No Plumbing
	Extra Toilet
	Extra Sink
	Separate Shower
	Ceramic Tile Floor
	Ceramic Tile Wains
	Ceramic Tub Alcove
	Vent Fan

(14) Water/Sewer

	Public Water
	Public Sewer
	Water Well
	1000 Gal Septic
	2000 Gal Septic

Lump Sum Items:

(15) Built-ins

	Appliance Allow.
	Cook Top
	Dishwasher
	Garbage Disposal
	Bath Heater
	Vent Fan
	Hot Tub
	Unvented Hood
	Vented Hood
	Intercom
	Jacuzzi Tub
	Jacuzzi repl.Tub
	Oven
	Microwave
	Standard Range
	Self Clean Range
	Sauna
	Trash Compactor
	Central Vacuum
	Security System

(15) Fireplaces

	Interior 1 Story
	Interior 2 Story
	2nd/Same Stack
	Two Sided
	Exterior 1 Story
	Exterior 2 Story
	Prefab 1 Story
	Prefab 2 Story
	Heat Circulator
	Raised Hearth
	Wood Stove
	Direct-Vented Gas

Class: CD
Effec. Age: 20
Floor Area: 0
Total Base New : 40,930 E.C.F.
Total Depr Cost: 16,781 X 1.297
Estimated T.C.V: 21,765

(16) Porches/Decks

Area	Type

(17) Garage

Year Built:
Car Capacity:
Class: CD
Exterior: Pole
Brick Ven.: 0
Stone Ven.: 0
Common Wall: Detache
Foundation: 42 Inch
Finished ?:
Auto. Doors: 0
Mech. Doors: 0
Area: 1536
% Good: 41
Storage Area: 0
No Conc. Floor: 1536

Bsmnt Garage:

Carport Area:
Roof:

Cost Est. for Res. Bldg: 2 Single Family PLAIN Cls CD Blt 0
(11) Heating System: Forced Air w/ Ducts
Ground Area = 0 SF Floor Area = 0 SF.
Phy/Ab.Phy/Func/Econ/Comb. % Good=80/100/100/100/80
Building Areas

Stories / Exterior / Foundation	Size	Cost New	Depr. Cost	
Other Additions/Adjustments				
Garages				
Class: CD Exterior: Pole (Unfinished)				
Base Cost	384	11,324	4,643	*4
No Concrete Floor	384	-2,362	-968	
Class: CD Exterior: Pole (Unfinished)				
Base Cost	1536	33,408	13,697	*4
No Concrete Floor	1536	-9,446	-3,873	
Local Cost Items				
POLE LEANTO DIRT	1152	4,262	1,747	*4
SHED	480	3,744	1,535	*4
	Totals:	40,930	16,781	

Notes:
ECF (RESIDENTIAL) 1.297 => TCV: 21,765

*** Information herein deemed reliable but not guaranteed***

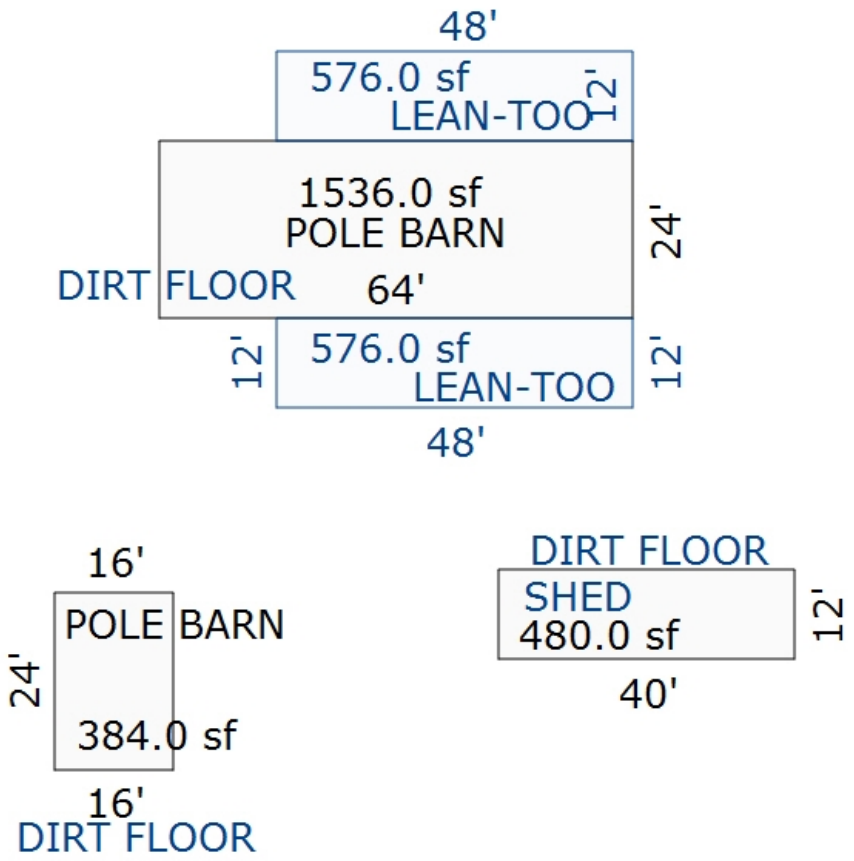

Sketch by Apex Sketch

*** Information herein deemed reliable but not guaranteed***

Parcel Number: 2410-26-1201 Jurisdiction: GREENWOOD TWP County: WEXFORD Printed on 02/15/2024

Grantor	Grantee	Sale Price	Sale Date	Inst. Type	Terms of Sale	Liber & Page	Verified By	Prcnt. Trans.

Property Address	Class: RESIDENTIAL-IMPROV	Zoning:	Building Permit(s)	Date	Number	Status
4602 E 10 RD	School: MANTON CONSOLIDATED SCHOOLS					
	P.R.E. 100% / /					
Owner's Name/Address	:					
CRANER, LILA P. & FAITH CRANER TRUST 4602 E 10 RD MANTON MI 49663	2024 Est TCV 419,598 TCV/TFA: 344.50					

Tax Description

W 1/2 OF NE 1/4 & E 1/2 OF E 1/2 OF NW 1/4 --120 A. M/L-- GW. SEC. 26 T24N R10W -MANTON-

Comments/Influences

	Improved		Vacant
X			

	Public Improvements
	Dirt Road
	Gravel Road
X	Paved Road
	Storm Sewer
	Sidewalk
	Water
	Sewer
X	Electric
	Gas
	Curb
	Street Lights
	Standard Utilities
	Underground Utils.

	Topography of Site
	Level
X	Rolling
	Low
	High
	Landscaped
	Swamp
X	Wooded
	Pond
	Waterfront
	Ravine
	Wetland
	Flood Plain
X	OPEN/PINES

Who	When	What
GLA	07/10/2019	INSPECTION
GLA	07/10/2019	INSPECTION

Land Value Estimates for Land Table 4010.LAND VALUES

Description	Frontage	Depth	* Factors * Front	Depth	Rate	%Adj.	Reason	Value
ACREAGE			118.500 Acres		2,480	100		293,880
ROW			1.500 Acres		0	100		0
			120.00 Total Acres		Total Est. Land Value =			293,880

Land Improvement Cost Estimates

Description	Rate	Size	% Good	Cash Value
D/W/P: 3.5 Concrete	5.82	355	52	1,074
Wood Frame	18.03	435	52	4,078
Total Estimated Land Improvements True Cash Value =				5,152

Year	Land Value	Building Value	Assessed Value	Board of Review	Tribunal/ Other	Taxable Value
2024	146,900	62,900	209,800			65,591C
2023	112,600	52,000	164,600			62,468C
2022	100,700	44,300	145,000			59,494C
2021	88,900	45,200	134,100			57,594C

The Equalizer. Copyright (c) 1999 - 2009.
Licensed To: Township of Greenwood, County of Wexford, Michigan

*** Information herein deemed reliable but not guaranteed***

Building Type

X	Single Family
	Mobile Home
	Town Home
	Duplex
	A-Frame
X	Wood Frame

Building Style: PLAIN

Yr Built	Remodeled
0	0

Condition: Good

Room List

	Basement
	1st Floor
	2nd Floor
	Bedrooms

(1) Exterior

	Wood/Shingle
X	Aluminum/Vinyl
	Brick
X	Insulation

(2) Windows

	Many		Large
X	Avg.	X	Avg.
	Few		Small

	Wood Sash
	Metal Sash
X	Vinyl Sash
	Double Hung
	Horiz. Slide
	Casement
	Double Glass
	Patio Doors
X	Storms & Screens

(3) Roof

X	Gable		Gambrel
	Hip		Mansard
	Flat		Shed

X	Asphalt Shingle

Chimney:

(3) Roof (cont.)

	Eavestrough
X	Insulation
0	Front Overhang
0	Other Overhang

(4) Interior

X	Drywall		Plaster
	Paneled		Wood T&G

Trim & Decoration

	Ex	X	Ord		Min

Size of Closets

	Lg	X	Ord		Small

Doors:		Solid	X	H.C.	

(5) Floors

Kitchen:
Other: Linoleum
Other: Carpeted

(6) Ceilings

X	Drywall		

(7) Excavation

Basement: 338 S.F.
Crawl: 796 S.F.
Slab: 0 S.F.
Height to Joists: 0.0

(8) Basement

	Conc. Block
	Poured Conc.
	Stone
	Treated Wood
	Concrete Floor

(9) Basement Finish

	Recreation SF
	Living SF
	Walkout Doors (B)
	No Floor SF
	Walkout Doors (A)

(10) Floor Support

Joists:
Unsupported Len:
Cntr.Sup:

(11) Heating/Cooling

X	Gas		Oil		Elec.
	Wood		Coal		Steam

	Forced Air w/o Ducts
X	Forced Air w/ Ducts
	Forced Hot Water
	Electric Baseboard
	Elec. Ceil. Radiant
	Radiant (in-floor)
	Electric Wall Heat
	Space Heater
	Wall/Floor Furnace
	Forced Heat & Cool
	Heat Pump
	No Heating/Cooling

	Central Air
	Wood Furnace

(12) Electric

150	Amps Service

No./Qual. of Fixtures

	Ex.	X	Ord.		Min

No. of Elec. Outlets

	Many	X	Ave.		Few

(13) Plumbing

1	Average Fixture(s)
	3 Fixture Bath
	2 Fixture Bath
	Softener, Auto
	Softener, Manual
	Solar Water Heat
	No Plumbing
	Extra Toilet
	Extra Sink
	Separate Shower
	Ceramic Tile Floor
	Ceramic Tile Wains
	Ceramic Tub Alcove
	Vent Fan

(14) Water/Sewer

	Public Water
	Public Sewer
1	Water Well
1	1000 Gal Septic
	2000 Gal Septic

Lump Sum Items:

(15) Built-ins

	Appliance Allow.
	Cook Top
	Dishwasher
	Garbage Disposal
	Bath Heater
	Vent Fan
	Hot Tub
	Unvented Hood
	Vented Hood
	Intercom
	Jacuzzi Tub
	Jacuzzi repl.Tub
	Oven
	Microwave
	Standard Range
	Self Clean Range
	Sauna
	Trash Compactor
	Central Vacuum
	Security System

(15) Fireplaces

	Interior 1 Story
	Interior 2 Story
	2nd/Same Stack
	Two Sided
	Exterior 1 Story
	Exterior 2 Story
	Prefab 1 Story
	Prefab 2 Story
	Heat Circulator
	Raised Hearth
	Wood Stove
	Direct-Vented Gas

Class: D
Effec. Age: 48
Floor Area: 1,218
Total Base New : 171,859 E.C.F.
Total Depr Cost: 89,364 X 1.297
Estimated T.C.V: 115,905

(16) Porches/Decks

Area	Type
150	CPP
117	CCP (1 Story)
312	WPP

(17) Garage

Year Built:
Car Capacity:
Class: D
Exterior: Siding
Brick Ven.: 0
Stone Ven.: 0
Common Wall: Detache
Foundation: 42 Inch
Finished ?:
Auto. Doors: 0
Mech. Doors: 0
Area: 480
% Good: 0
Storage Area: 0
No Conc. Floor: 0

Bsmnt Garage:

Carport Area:
Roof:

Cost Est. for Res. Bldg: 1 Single Family PLAIN Cls D Blt 0
(11) Heating System: Forced Air w/ Ducts
Ground Area = 1134 SF Floor Area = 1218 SF.
Phy/Ab.Phy/Func/Econ/Comb. % Good=52/100/100/100/52
Building Areas

Stories	Exterior	Foundation	Size	Cost New	Depr. Cost
1.25 Story	Siding	Basement	338		
1 Story	Siding	Crawl Space	796		
			Total:	134,778	70,083

Other Additions/Adjustments			
Water/Sewer			
1000 Gal Septic	1	4,293	2,232
Water Well, 100 Feet	1	5,545	2,883
Porches			
CPP	150	2,331	1,212
CCP (1 Story)	117	2,741	1,425
WPP	312	4,118	2,141
Garages			
Class: D Exterior: Siding Foundation: 42 Inch (Unfinished)			
Base Cost	480	17,184	8,936
Local Cost Items			
FREE STANDING ROOF	120	869	452
	Totals:	171,859	89,364

Notes:

ECF (RESIDENTIAL) 1.297 => TCV: 115,905

*** Information herein deemed reliable but not guaranteed***

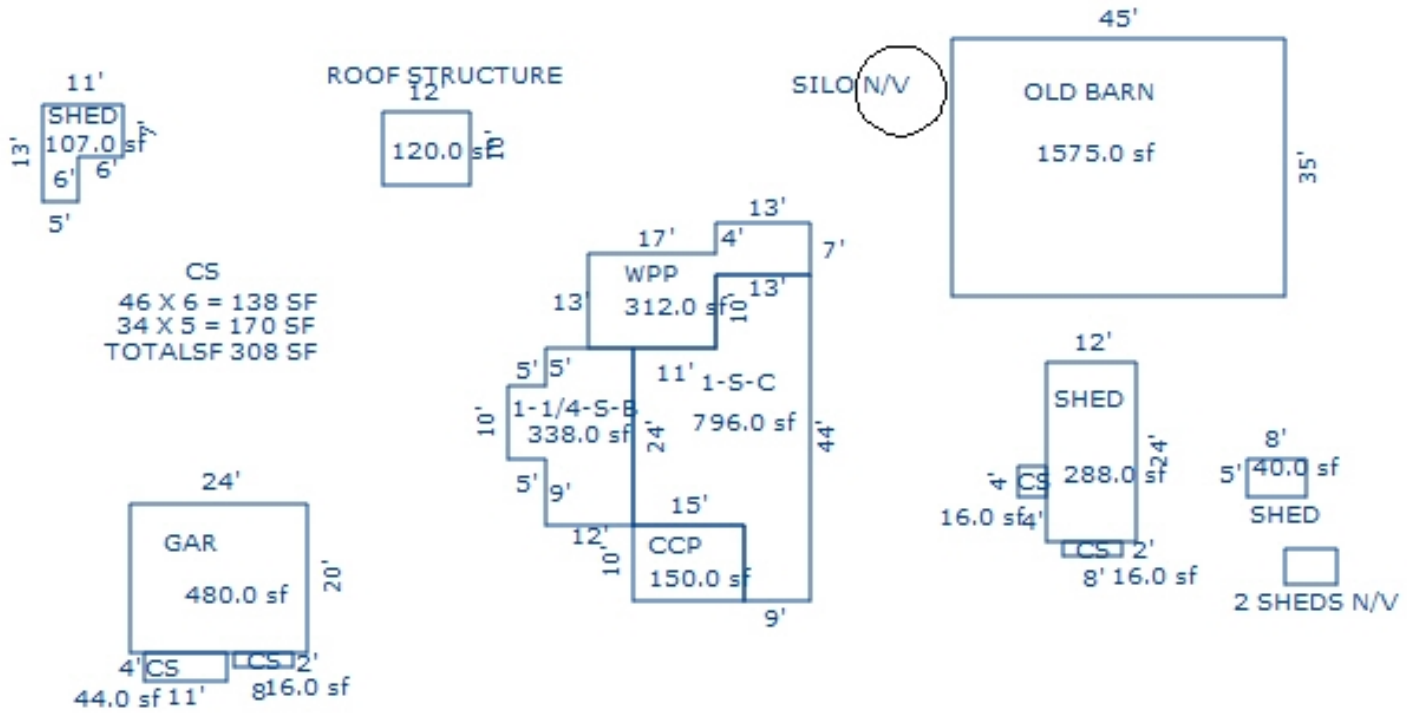

Sketch by Apex Sketch

*** Information herein deemed reliable but not guaranteed***

Building Type	Arenas				
Year Built					
Class/Construction	D,Pole				
Quality/Exterior	Cheap				
# of Walls, Perimeter	4 Wall, 160				
Height	24				
Heating System	No Heating/Cooling				
Length/Width/Area	45 x 35 = 1575				
Cost New	$ 24,633				
Phy./Func./Econ. %Good	20/100/100 20.0				
Depreciated Cost	$ 4,927				
+ Unit-In-Place Items	$ 0				
Description, Size X Rate X %Good = Cost Itemized ->\ Unit-In-Place ->\ Items ->\					
E.C.F.	X 0.946				
% Good	20				
Est. True Cash Value	$ 4,661				
Comments:					
Total Estimated True Cash Value of Agricultural Improvements / This Card: 4661 / All Cards: 4661					

*** Information herein deemed reliable but not guaranteed***

Parcel Number: 2410-26-1401 Jurisdiction: GREENWOOD TWP County: WEXFORD Printed on 02/15/2024

Grantor	Grantee	Sale Price	Sale Date	Inst. Type	Terms of Sale	Liber & Page	Verified By	Prcnt. Trans.
MOWBRAY, CATHERINE A	MOWBRAY, CATHERINE A TRUST	1	01/03/2019	QC	14-INTO/OUT OF TRUST	684 /545	DEED	0.0
MOWBRAY, JACK ESTATE	MOWBRAY, CATHERINE A	60,000	04/12/2013	WD	08-ESTATE	658/1413	DEED	100.0

Property Address

7603 N 35 RD

Owner's Name/Address

MOWBRAY, CATHERINE A TRUST
7603 N 35 RD
MANTON MI 49663

Tax Description

SE 1/4 OF NE 1/4 EXC SE 1/4 OF SE 1/4 OF NE 1/4 --28.5 A. -- GW. SEC. 26 T24N R10W -MANTON-

Comments/Influences

The Equalizer. Copyright (c) 1999 - 2009. Licensed To: Township of Greenwood, County of Wexford, Michigan

Class: RESIDENTIAL-IMPROV Zoning:

School: MANTON CONSOLIDATED SCHOOLS

P.R.E. 100% / /

:

2024 Est TCV 217,261 TCV/TFA: 117.44

Building Permit(s)	Date	Number	Status
Deck	04/28/2015	PB15-0057	COMPLETE

X Improved | Vacant

	Public Improvements
	Dirt Road
X	Gravel Road
	Paved Road
	Storm Sewer
	Sidewalk
	Water
	Sewer
X	Electric
	Gas
	Curb
	Street Lights
	Standard Utilities
	Underground Utils.

	Topography of Site
	Level
X	Rolling
X	Low
	High
	Landscaped
	Swamp
X	Wooded
	Pond
	Waterfront
	Ravine
	Wetland
	Flood Plain
X	OPEN

Who	When	What
GLA	07/10/2019	INSPECTION
GLA	07/10/2019	INSPECTION
GLA	08/02/2014	INSPECTION

Land Value Estimates for Land Table 4010.LAND VALUES

Description	Frontage	Depth	* Factors * Front	Depth	Rate	%Adj.	Reason	Value
ACREAGE			28.000 Acres		2,722	100		76,216
ROW			0.500 Acres		0	100		0
			28.50 Total Acres		Total Est. Land Value =			76,216

Land Improvement Cost Estimates

Description	Rate	Size	% Good	Cash Value
D/W/P: Asphalt Paving	2.71	1400	46	1,745
D/W/P: 3.5 Concrete	5.82	465	46	1,245
Total Estimated Land Improvements True Cash Value =				2,990

Year	Land Value	Building Value	Assessed Value	Board of Review	Tribunal/ Other	Taxable Value
2024	38,100	70,500	108,600			70,219C
2023	35,000	58,200	93,200			66,876C
2022	29,900	49,600	79,500			63,692C
2021	26,200	50,400	76,600			61,658C

*** Information herein deemed reliable but not guaranteed***

Building Type

X	Single Family
	Mobile Home
	Town Home
	Duplex
	A-Frame
X	Wood Frame

Building Style: PLAIN

Yr Built	Remodeled
0	0

Condition: Good

Room List

	Basement
	1st Floor
	2nd Floor
	Bedrooms

(1) Exterior

X	Wood/Shingle
	Aluminum/Vinyl
	Brick
X	Insulation

(2) Windows

X	Many Avg. Few	X	Large Avg. Small

	Wood Sash
	Metal Sash
X	Vinyl Sash
	Double Hung
	Horiz. Slide
	Casement
	Double Glass
	Patio Doors
X	Storms & Screens

(3) Roof

X	Gable		Gambrel
	Hip		Mansard
	Flat		Shed

X	Asphalt Shingle

Chimney:

(3) Roof (cont.)

	Eavestrough
X	Insulation
0	Front Overhang
0	Other Overhang

(4) Interior

X	Drywall		Plaster
	Paneled		Wood T&G

Trim & Decoration

	Ex	X	Ord		Min

Size of Closets

	Lg	X	Ord		Small

Doors:		Solid	X	H.C.	

(5) Floors

Kitchen:
Other: Linoleum
Other: Carpeted

(6) Ceilings

X	Drywall

(7) Excavation

Basement: 672 S.F.
Crawl: 880 S.F.
Slab: 0 S.F.
Height to Joists: 0.0

(8) Basement

	Conc. Block
	Poured Conc.
	Stone
	Treated Wood
	Concrete Floor

(9) Basement Finish

	Recreation SF
	Living SF
	Walkout Doors (B)
	No Floor SF
	Walkout Doors (A)

(10) Floor Support

Joists:
Unsupported Len:
Cntr.Sup:

(11) Heating/Cooling

X	Gas		Oil		Elec.
	Wood		Coal		Steam

	Forced Air w/o Ducts
X	Forced Air w/ Ducts
	Forced Hot Water
	Electric Baseboard
	Elec. Ceil. Radiant
	Radiant (in-floor)
	Electric Wall Heat
	Space Heater
	Wall/Floor Furnace
	Forced Heat & Cool
	Heat Pump
	No Heating/Cooling

	Central Air
	Wood Furnace

(12) Electric

150	Amps Service

No./Qual. of Fixtures

	Ex.	X	Ord.		Min

No. of Elec. Outlets

	Many	X	Ave.		Few

(13) Plumbing

1	Average Fixture(s)
	3 Fixture Bath
	2 Fixture Bath
	Softener, Auto
	Softener, Manual
	Solar Water Heat
	No Plumbing
	Extra Toilet
	Extra Sink
	Separate Shower
	Ceramic Tile Floor
	Ceramic Tile Wains
	Ceramic Tub Alcove
	Vent Fan

(14) Water/Sewer

	Public Water
	Public Sewer
1	Water Well
1	1000 Gal Septic
	2000 Gal Septic

Lump Sum Items:

(15) Built-ins

	Appliance Allow.
	Cook Top
	Dishwasher
	Garbage Disposal
	Bath Heater
	Vent Fan
	Hot Tub
	Unvented Hood
	Vented Hood
	Intercom
	Jacuzzi Tub
	Jacuzzi repl.Tub
	Oven
	Microwave
	Standard Range
	Self Clean Range
	Sauna
	Trash Compactor
	Central Vacuum
	Security System

(15) Fireplaces

	Interior 1 Story
	Interior 2 Story
	2nd/Same Stack
	Two Sided
	Exterior 1 Story
	Exterior 2 Story
	Prefab 1 Story
	Prefab 2 Story
	Heat Circulator
	Raised Hearth
	Wood Stove
	Direct-Vented Gas

Class: D
Effec. Age: 54
Floor Area: 1,850
Total Base New : 231,398 E.C.F.
Total Depr Cost: 106,442 X 1.297
Estimated T.C.V: 138,055

(16) Porches/Decks

Area	Type
156	WCP (1 Story)
24	WPP

(17) Garage

Year Built:
Car Capacity:
Class: D
Exterior: Pole
Brick Ven.: 0
Stone Ven.: 0
Common Wall: Detache
Foundation: 18 Inch
Finished ?:
Auto. Doors: 0
Mech. Doors: 0
Area: 1040
% Good: 0
Storage Area: 0
No Conc. Floor: 0

Bsmnt Garage:

Carport Area:
Roof:

Cost Est. for Res. Bldg: 1 Single Family PLAIN Cls D Blt 0
(11) Heating System: Forced Air w/ Ducts
Ground Area = 1552 SF Floor Area = 1850 SF.
Phy/Ab.Phy/Func/Econ/Comb. % Good=46/100/100/100/46
Building Areas

Stories	Exterior	Foundation	Size	Cost New	Depr. Cost
1 Story	Siding	Crawl Space	360		
1.25 Story	Siding	Crawl Space	520		
1.25 Story	Siding	Basement	672		
			Total:	185,060	85,126

Other Additions/Adjustments

Water/Sewer			
1000 Gal Septic	1	4,293	1,975
Water Well, 100 Feet	1	5,545	2,551
Porches			
WCP (1 Story)	156	5,518	2,538
WPP	24	1,138	523
Garages			
Class: D Exterior: Pole (Unfinished)			
Base Cost	1040	19,999	9,200
Class: D Exterior: Siding Foundation: 42 Inch (Unfinished)			
Base Cost	216	9,845	4,529
	Totals:	231,398	106,442

Notes:
ECF (RESIDENTIAL) 1.297 => TCV: 138,055

*** Information herein deemed reliable but not guaranteed***

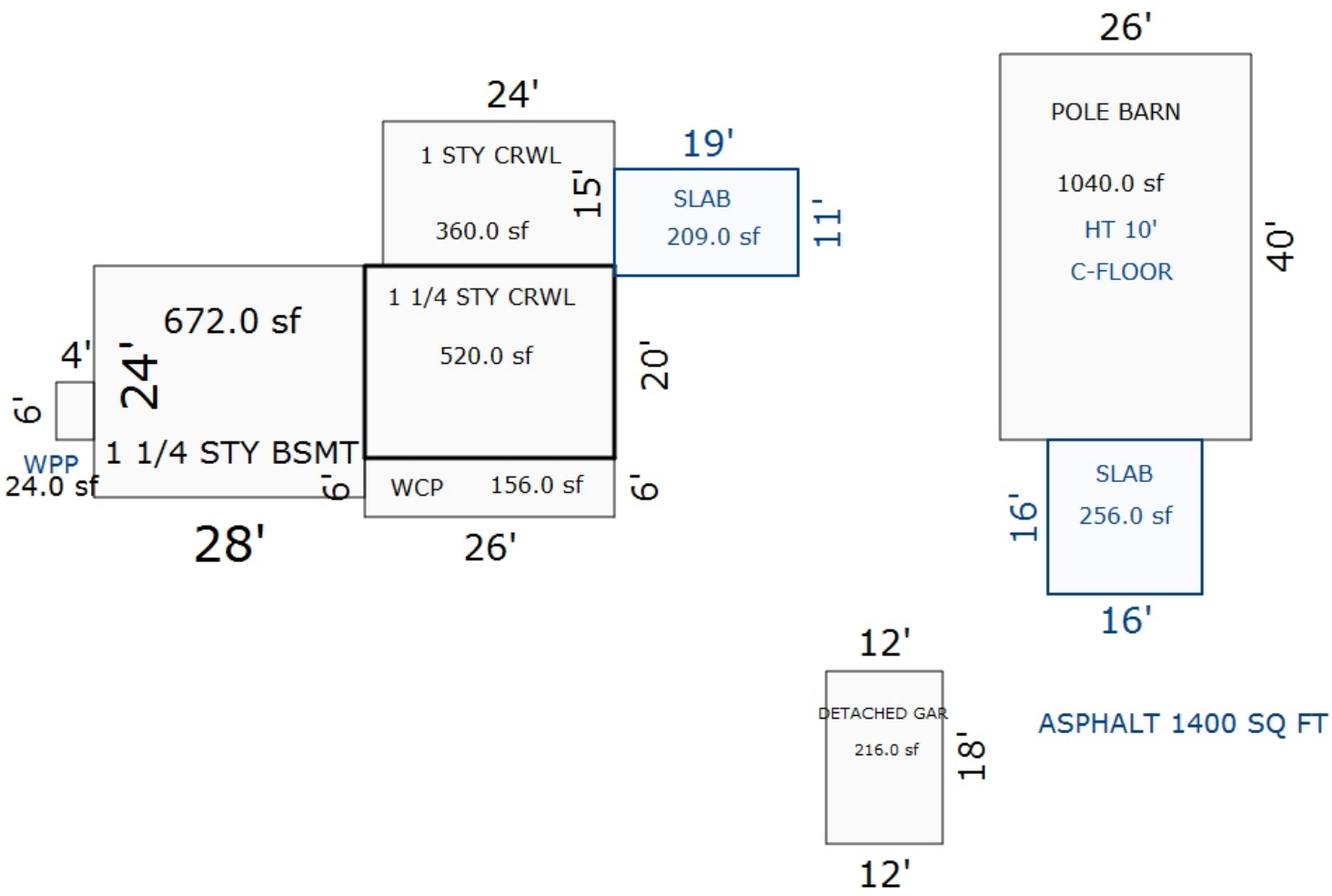

Sketch by Apex Sketch

*** Information herein deemed reliable but not guaranteed***

Parcel Number: 2410-26-1402 Jurisdiction: GREENWOOD TWP County: WEXFORD Printed on 02/15/2024

Grantor	Grantee	Sale Price	Sale Date	Inst. Type	Terms of Sale	Liber & Page	Verified By	Prcnt. Trans.
MONROE, LUCAS	PRICE, WILLIAM & RACHEL	275,000	10/30/2021	WD	03-ARM'S LENGTH	691/1291	DEED	100.0
HART, CHAD A & SYLVIA S	MONROE, LUCAS	155,000	01/31/2017	WD	03-ARM'S LENGTH	6791/040	DEED	100.0
MALUSE, PATRICK J & KATHLE	HART, CHAD A & SYLVIA S	84,000	09/21/2009	WD	03-ARM'S LENGTH	624/1449	DEED	100.0
RICHARD, GERALD	MALUSE, PATRICK & KATHLEEN	103,000	07/06/2000	WD	03-ARM'S LENGTH	375:365	DEED	0.0

Property Address

7541 N 35 RD

Owner's Name/Address

PRICE, WILLIAM & RACHEL
7541 N 35 RD
MANTON MI 49663

Tax Description

SE 1/4 OF SE 1/4 OF NE 1/4 9 A. GW. SEC. 26 T24N R10W -MANTON-

Comments/Influences

Class: RESIDENTIAL-IMPROV Zoning:

School: MANTON CONSOLIDATED SCHOOLS

P.R.E. 100% 11/02/2021

:

2024 Est TCV 213,609 TCV/TFA: 211.91

Building Permit(s)	Date	Number	Status
Res. Add/Alter/Repair	05/03/2021	PB21-0053	ENTERED
Res. Add/Alter/Repair	03/25/2010	PE10-18688	
Mechanical	11/02/2009	PM09-10729	
Garage, Attached	09/23/2009	PB09-0225	

X	Improved		Vacant

	Public Improvements
	Dirt Road
X	Gravel Road
	Paved Road
	Storm Sewer
	Sidewalk
	Water
	Sewer
X	Electric
	Gas
	Curb
	Street Lights
	Standard Utilities
	Underground Utils.

	Topography of Site
	Level
X	Rolling
X	Low
	High
	Landscaped
	Swamp
X	Wooded
	Pond
	Waterfront
	Ravine
	Wetland
	Flood Plain
X	OPEN

Who	When	What
GLA	07/10/2019	INSPECTION
GLA	07/10/2019	INSPECTION
GLA	05/02/2014	INSPECTION

Land Value Estimates for Land Table 4010.LAND VALUES

Description	Frontage	Depth	* Factors * Front	Depth	Rate	%Adj.	Reason	Value
ACREAGE			8.510 Acres		4,830	100		41,102
ROW			0.500 Acres		0	100		0
			9.01 Total Acres		Total Est. Land Value =			41,102

Land Improvement Cost Estimates

Description	Rate	Size	% Good	Cash Value
D/W/P: 3.5 Concrete	6.63	259	56	962
Total Estimated Land Improvements True Cash Value =				962

Year	Land Value	Building Value	Assessed Value	Board of Review	Tribunal/ Other	Taxable Value
2024	20,600	86,200	106,800			78,608C
2023	12,400	70,800	83,200			74,865C
2022	11,300	60,000	71,300			71,300S
2021	12,000	59,900	71,900			60,097C

The Equalizer. Copyright (c) 1999 - 2009.
Licensed To: Township of Greenwood, County of Wexford, Michigan

*** Information herein deemed reliable but not guaranteed***

Building Type

X	Single Family
	Mobile Home
	Town Home
	Duplex
	A-Frame
X	Wood Frame

Building Style: PLAIN

Yr Built	Remodeled
0	0

Condition: Good

Room List

	Basement
	1st Floor
	2nd Floor
	Bedrooms

(1) Exterior

	Wood/Shingle
X	Aluminum/Vinyl
	Brick
X	Insulation

(2) Windows

	Many		Large
X	Avg.	X	Avg.
	Few		Small

	Wood Sash
	Metal Sash
X	Vinyl Sash
	Double Hung
	Horiz. Slide
	Casement
	Double Glass
	Patio Doors
X	Storms & Screens

(3) Roof

X	Gable		Gambrel
	Hip		Mansard
	Flat		Shed

X	Asphalt Shingle

Chimney:

(3) Roof (cont.)

	Eavestrough
X	Insulation
0	Front Overhang
0	Other Overhang

(4) Interior

X	Drywall		Plaster
	Paneled		Wood T&G

Trim & Decoration

	Ex	X	Ord		Min

Size of Closets

	Lg	X	Ord		Small

Doors:		Solid	X	H.C.	

(5) Floors

Kitchen:
Other: Linoleum
Other: Carpeted

(6) Ceilings

X	Drywall

(7) Excavation

Basement: 1008 S.F.
Crawl: 0 S.F.
Slab: 0 S.F.
Height to Joists: 0.0

(8) Basement

	Conc. Block
	Poured Conc.
	Stone
	Treated Wood
	Concrete Floor

(9) Basement Finish

	Recreation SF
	Living SF
	Walkout Doors (B)
	No Floor SF
	Walkout Doors (A)

(10) Floor Support

Joists:
Unsupported Len:
Cntr.Sup:

(11) Heating/Cooling

X	Gas		Oil		Elec.
	Wood		Coal		Steam

	Forced Air w/o Ducts
X	Forced Air w/ Ducts
	Forced Hot Water
	Electric Baseboard
	Elec. Ceil. Radiant
	Radiant (in-floor)
	Electric Wall Heat
	Space Heater
	Wall/Floor Furnace
	Forced Heat & Cool
	Heat Pump
	No Heating/Cooling

X	Central Air
	Wood Furnace

(12) Electric

150	Amps Service

No./Qual. of Fixtures

	Ex.	X	Ord.		Min

No. of Elec. Outlets

	Many	X	Ave.		Few

(13) Plumbing

	Average Fixture(s)
1	3 Fixture Bath
	2 Fixture Bath
	Softener, Auto
	Softener, Manual
	Solar Water Heat
	No Plumbing
	Extra Toilet
	Extra Sink
	Separate Shower
	Ceramic Tile Floor
	Ceramic Tile Wains
	Ceramic Tub Alcove
	Vent Fan

(14) Water/Sewer

	Public Water
	Public Sewer
1	Water Well
1	1000 Gal Septic
	2000 Gal Septic

Lump Sum Items:

(15) Built-ins

	Appliance Allow.
	Cook Top
	Dishwasher
	Garbage Disposal
	Bath Heater
	Vent Fan
	Hot Tub
	Unvented Hood
	Vented Hood
	Intercom
	Jacuzzi Tub
	Jacuzzi repl.Tub
	Oven
	Microwave
	Standard Range
	Self Clean Range
	Sauna
	Trash Compactor
	Central Vacuum
	Security System

(15) Fireplaces

	Interior 1 Story
	Interior 2 Story
	2nd/Same Stack
	Two Sided
	Exterior 1 Story
	Exterior 2 Story
	Prefab 1 Story
	Prefab 2 Story
	Heat Circulator
	Raised Hearth
	Wood Stove
	Direct-Vented Gas

Class: CD
Effec. Age: 44
Floor Area: 1,008
Total Base New : 236,182 E.C.F.
Total Depr Cost: 132,263 X 1.297
Estimated T.C.V: 171,545

(16) Porches/Decks

Area	Type
310	WCP (1 Story)
35	WPP
216	WPP

(17) Garage

Year Built:
Car Capacity:
Class: CD
Exterior: Siding
Brick Ven.: 0
Stone Ven.: 0
Common Wall: 1 Wall
Foundation: 18 Inch
Finished ?:
Auto. Doors: 0
Mech. Doors: 0
Area: 864
% Good: 0
Storage Area: 0
No Conc. Floor: 0

Bsmnt Garage:

Carport Area:
Roof:

Cost Est. for Res. Bldg: 1 Single Family PLAIN Cls CD Blt 0
(11) Heating System: Forced Air w/ Ducts , Air Conditioning
Ground Area = 1008 SF Floor Area = 1008 SF.
Phy/Ab.Phy/Func/Econ/Comb. % Good=56/100/100/100/56
Building Areas

Stories	Exterior	Foundation	Size	Cost New	Depr. Cost
1 Story	Siding	Basement	1,008		
			Total:	144,849	81,116
Other Additions/Adjustments					
Water/Sewer					
1000 Gal Septic			1	4,582	2,566
Water Well, 100 Feet			1	5,680	3,181
Porches					
WCP (1 Story)			310	9,130	5,113
WPP			35	1,608	900
WPP			216	4,221	2,364
Garages					
Class: CD Exterior: Siding Foundation: 18 Inch (Unfinished)					
Base Cost			864	26,819	15,019
Common Wall: 1 Wall			1	-2,060	-1,154
Class: CD Exterior: Pole (Unfinished)					
Base Cost			672	16,713	9,359
Class: D Exterior: Pole (Unfinished)					
Base Cost			1620	31,153	17,446
No Concrete Floor			1620	-9,088	-5,089
Local Cost Items					
POLE LEANTO DIRT			696	2,575	1,442
			Totals:	236,182	132,263

Notes:
ECF (RESIDENTIAL) 1.297 => TCV: 171,545

*** Information herein deemed reliable but not guaranteed***

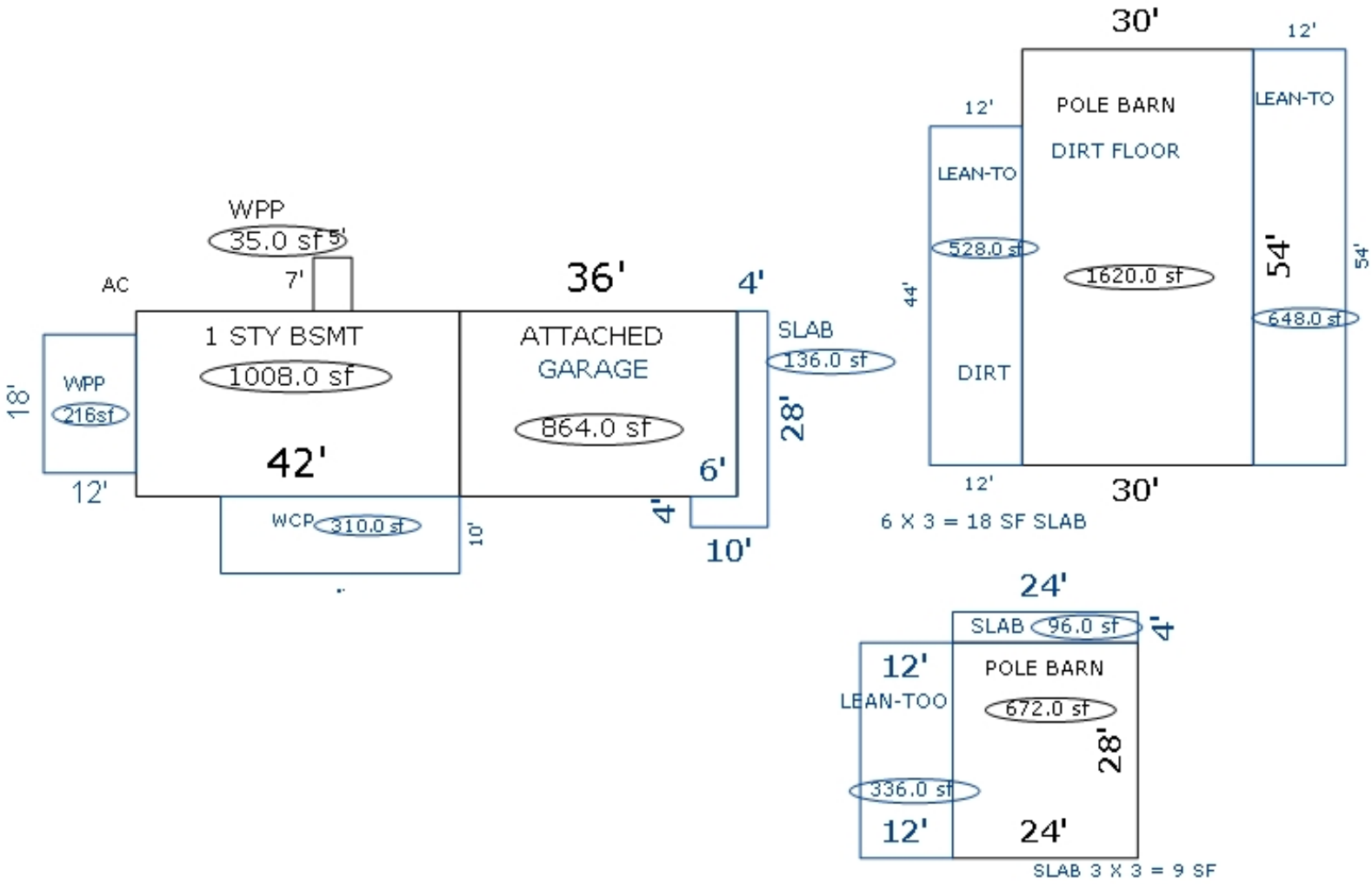

*** Information herein deemed reliable but not guaranteed***

Parcel Number: 2410-26-2201 Jurisdiction: GREENWOOD TWP County: WEXFORD Printed on 02/15/2024

Grantor	Grantee	Sale Price	Sale Date	Inst. Type	Terms of Sale	Liber & Page	Verified By	Prcnt. Trans.

Property Address	Class: RESIDENTIAL-IMPROV	Zoning:	Building Permit(s)	Date	Number	Status
4148 E 10 RD	School: MANTON CONSOLIDATED SCHOOLS		RESIDENTIAL - REMODEL	11/03/1999	PB9410	
	P.R.E. 100% / /		RESIDENTIAL - NEW	08/14/1998	PE11462	
Owner's Name/Address	:					
GARBRECHT, TERRY R. & ALICE M. 4148 E 10 RD MANTON MI 49663	2024 Est TCV 176,727 TCV/TFA: 148.76					

X Improved | Vacant

Land Value Estimates for Land Table 4010.LAND VALUES

Description	Frontage	Depth	* Factors * Front	Depth	Rate	%Adj.	Reason	Value
ACREAGE			24.650 Acres		2,749	100		67,767
ROW			1.350 Acres		0	100		0
			26.00 Total Acres		Total Est. Land Value =			67,767

Land Improvement Cost Estimates

Description	Rate	Size	% Good	Cash Value
D/W/P: 3.5 Concrete	6.63	62	45	185
Wood Frame	28.87	104	55	1,651
Total Estimated Land Improvements True Cash Value =				1,836

Public Improvements

	Dirt Road
	Gravel Road
X	Paved Road
	Storm Sewer
	Sidewalk
	Water
	Sewer
X	Electric
	Gas
	Curb
	Street Lights
	Standard Utilities
	Underground Utils.

Topography of Site

	Level
X	Rolling
	Low
X	High
	Landscaped
	Swamp
	Wooded
	Pond
	Waterfront
	Ravine
	Wetland
	Flood Plain
X	OPEN

Tax Description

NW 1/4 OF NW 1/4 EXC S 462 FT. 26 A. GW. SEC. 26 T24N R10W -MANTON-

Comments/Influences

Year	Land Value	Building Value	Assessed Value	Board of Review	Tribunal/ Other	Taxable Value
2024	33,900	54,500	88,400			56,953C
2023	30,900	44,100	75,000			54,241C
2022	27,100	36,900	64,000			51,659C
2021	24,700	31,600	56,300			50,009C

Who	When	What
GLA	07/10/2019	INSPECTION
GLA	07/10/2019	INSPECTION
GLA	08/02/2014	INSPECTION

The Equalizer. Copyright (c) 1999 - 2009.
Licensed To: Township of Greenwood, County of Wexford, Michigan

*** Information herein deemed reliable but not guaranteed***

Building Type

	Single Family
X	Mobile Home
	Town Home
	Duplex
	A-Frame

X	Wood Frame

Building Style: SWT/DWT

Yr Built	Remodeled
0	0

Condition: Good

Room List

	Basement
	1st Floor
	2nd Floor
	Bedrooms

(1) Exterior

	Wood/Shingle
X	Aluminum/Vinyl
	Brick
X	Insulation

(2) Windows

	Many		Large
X	Avg.	X	Avg.
	Few		Small

	Wood Sash
	Metal Sash
X	Vinyl Sash
	Double Hung
	Horiz. Slide
	Casement
	Double Glass
	Patio Doors
X	Storms & Screens

(3) Roof

X	Gable		Gambrel
	Hip		Mansard
	Flat		Shed

X	Asphalt Shingle

Chimney:

(3) Roof (cont.)

	Eavestrough
X	Insulation
0	Front Overhang
0	Other Overhang

(4) Interior

X	Drywall		Plaster
	Paneled		Wood T&G

Trim & Decoration

	Ex	X	Ord		Min

Size of Closets

	Lg	X	Ord		Small

Doors:		Solid	X	H.C.	

(5) Floors

Kitchen:
Other: Linoleum
Other: Carpeted

(6) Ceilings

X	Drywall		

(7) Excavation

Basement: 1188 S.F.
Crawl: 0 S.F.
Slab: 0 S.F.
Height to Joists: 0.0

(8) Basement

	Conc. Block
	Poured Conc.
	Stone
	Treated Wood
	Concrete Floor

(9) Basement Finish

	Recreation SF
	Living SF
	Walkout Doors (B)
	No Floor SF
	Walkout Doors (A)

(10) Floor Support

Joists:
Unsupported Len:
Cntr.Sup:

(11) Heating/Cooling

X	Gas		Oil		Elec.
	Wood		Coal		Steam

X	Forced Warm Air
	Wall Furnace
	Warm & Cool Air
	Heat Pump

X	Central Air
	Wood Furnace

(12) Electric

150	Amps Service

No./Qual. of Fixtures

	Ex.	X	Ord.		Min

No. of Elec. Outlets

	Many	X	Ave.		Few

(13) Plumbing

	Average Fixture(s)
1	3 Fixture Bath
	2 Fixture Bath
	Softener, Auto
	Softener, Manual
	Solar Water Heat
	No Plumbing
	Extra Toilet
	Extra Sink
	Separate Shower
	Ceramic Tile Floor
	Ceramic Tile Wains
	Ceramic Tub Alcove
	Vent Fan

(14) Water/Sewer

	Public Water
	Public Sewer
1	Water Well
1	1000 Gal Septic
	2000 Gal Septic

Lump Sum Items:

(15) Built-ins

	Appliance Allow.
	Cook Top
	Dishwasher
	Garbage Disposal
	Bath Heater
	Vent Fan
	Hot Tub
	Unvented Hood
	Vented Hood
	Intercom
	Jacuzzi Tub
	Jacuzzi repl.Tub
	Oven
	Microwave
	Standard Range
	Self Clean Range
	Sauna
	Trash Compactor
	Central Vacuum
	Security System

(15) Fireplaces

	Interior 1 Story
	Interior 2 Story
	2nd/Same Stack
	Two Sided
	Exterior 1 Story
	Exterior 2 Story
	Prefab 1 Story
	Prefab 2 Story
	Heat Circulator
	Raised Hearth
	Wood Stove
	Direct-Vented Gas

Class: Average
Effec. Age: 24
Floor Area:
Total Base New : 176,497 E.C.F.
Total Depr Cost: 82,594 X 1.297
Estimated T.C.V: 107,124

(16) Porches/Decks

Area	Type
340	WPP
9	WPP

(17) Garage

Year Built:
Car Capacity:
Class: CD
Exterior: Pole
Brick Ven.: 0
Stone Ven.: 0
Common Wall: Detache
Foundation: 18 Inch
Finished ?:
Auto. Doors: 0
Mech. Doors: 0
Area: 1200
% Good: 0
Storage Area: 0
No Conc. Floor: 0

Bsmnt Garage:

Carport Area:
Roof:

Cost Est. for Res. Bldg: 1 Mobile Home SWT/DWT Cls Average Blt 0
(11) Heating System: Wall Furnace, Air Conditioning
Ground Area = 1188 SF Floor Area = 1188 SF.
Phy/Ab.Phy/Func/Econ/Comb. % Good=47/100/100/100/47
Building Areas

Type	Ext. Walls	Roof/Fnd.	Size	Cost New	Depr. Cost	
Main Home	Siding	Comp.Shingle	1188			
Basement	Block, 6"		1188			
			Total:	110,541	51,954	
Other Additions/Adjustments						
Water/Sewer						
1000 Gal Septic			1	4,899	2,303	
Water Well, 150 Feet			1	8,655	4,068	
Porches						
WPP			340	7,776	3,655	
WPP			9	480	226	
Garages						
Class: D Exterior: Siding Foundation: 18 Inch (Unfinished)						
Base Cost			560	16,862	7,588	*4
Class: CD Exterior: Pole (Unfinished)						
Base Cost			1200	26,100	12,267	
Local Cost Items						
POLE LEANTO DIRT			320	1,184	533	*4
			Totals:	176,497	82,594	

Notes:

ECF (RESIDENTIAL) 1.297 => TCV: 107,124

*** Information herein deemed reliable but not guaranteed***

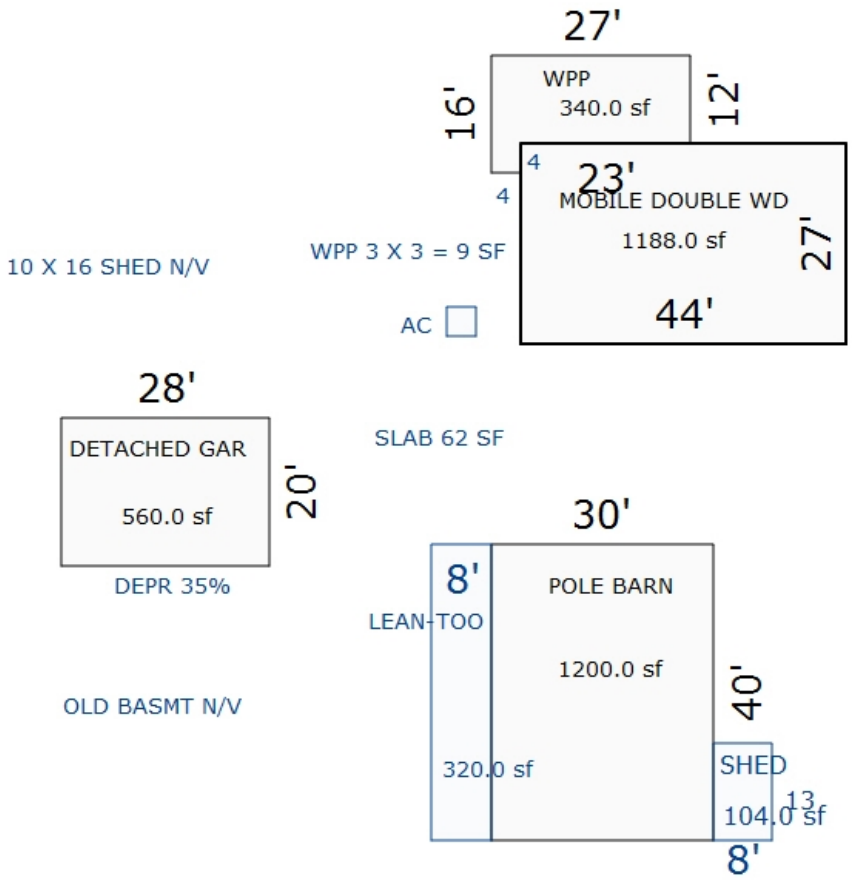

Sketch by Apex Sketch

*** Information herein deemed reliable but not guaranteed***

Parcel Number: 2410-26-2202 Jurisdiction: GREENWOOD TWP County: WEXFORD Printed on 02/15/2024

Grantor	Grantee	Sale Price	Sale Date	Inst. Type	Terms of Sale	Liber & Page	Verified By	Prcnt. Trans.
HEIGHTON, ELLEN ESTATE	HEIGHTON, HARRY P III	0	09/06/2006	WD	08-ESTATE	600/1738	DEED	0.0

Property Address

7790 N 33 RD

Owner's Name/Address

HEIGHTON, HARRY P III
258 OLD STATE RD
GAYLORD MI 49735

Tax Description

S 231 FT OF NW 1/4 OF NW 1/4 --6.79 A M/L-- GW. SEC. 26 T24N R10W -MANTON-

Comments/Influences

The Equalizer. Copyright (c) 1999 - 2009. Licensed To: Township of Greenwood, County of Wexford, Michigan

Class: RESIDENTIAL-IMPROV Zoning:

School: MANTON CONSOLIDATED SCHOOLS

P.R.E. 0%

:

2024 Est TCV 55,964 TCV/TFA: 119.07

Building Permit(s)	Date	Number	Status

X Improved | Vacant

	Public Improvements
	Dirt Road
X	Gravel Road
	Paved Road
	Storm Sewer
	Sidewalk
	Water
	Sewer
X	Electric
	Gas
	Curb
	Street Lights
	Standard Utilities
	Underground Utils.

	Topography of Site
	Level
X	Rolling
X	Low
X	High
	Landscaped
	Swamp
X	Wooded
	Pond
	Waterfront
	Ravine
	Wetland
	Flood Plain
X	OPEN/PINES

Who	When	What
GLA	07/10/2019	INSPECTION
GLA	07/10/2019	INSPECTION
GLA	08/02/2014	INSPECTION

Land Value Estimates for Land Table 4010.LAND VALUES

Description	Frontage	Depth	* Factors * Front	Depth	Rate	%Adj.	Reason	Value
	230.00	0.00	1.0000	1.0000	0	100		0
ACREAGE			6.790 Acres		5,112	100		34,710
ROW			0.175 Acres		0	100		0
230 Actual Front Feet, 6.96 Total Acres							Total Est. Land Value =	34,710

Year	Land Value	Building Value	Assessed Value	Board of Review	Tribunal/ Other	Taxable Value
2024	17,400	10,600	28,000			10,241C
2023	11,800	8,500	20,300			9,754C
2022	10,600	7,200	17,800			9,290C
2021	12,000	6,100	18,100			8,994C

*** Information herein deemed reliable but not guaranteed***

Building Type

	Single Family
X	Mobile Home
	Town Home
	Duplex
	A-Frame

X	Wood Frame

Building Style: PLAIN

Yr Built	Remodeled
0	0

Condition: Good

Room List

	Basement
	1st Floor
	2nd Floor
	Bedrooms

(1) Exterior

	Wood/Shingle
X	Aluminum/Vinyl
	Brick
X	Insulation

(2) Windows

	Many		Large
X	Avg.	X	Avg.
	Few		Small

	Wood Sash
	Metal Sash
X	Vinyl Sash
	Double Hung
	Horiz. Slide
	Casement
	Double Glass
	Patio Doors
X	Storms & Screens

(3) Roof

X	Gable		Gambrel
	Hip		Mansard
	Flat		Shed

X	Asphalt Shingle

Chimney:

(3) Roof (cont.)

	Eavestrough
X	Insulation
0	Front Overhang
0	Other Overhang

(4) Interior

X	Drywall		Plaster
	Paneled		Wood T&G

Trim & Decoration

	Ex	X	Ord		Min

Size of Closets

	Lg	X	Ord		Small

Doors:		Solid	X	H.C.	

(5) Floors

Kitchen:
Other: Linoleum
Other: Carpeted

(6) Ceilings

X	Drywall		

(7) Excavation

Basement: 0 S.F.
Crawl: 0 S.F.
Slab: 0 S.F.
Height to Joists: 0.0

(8) Basement

	Conc. Block
	Poured Conc.
	Stone
	Treated Wood
	Concrete Floor

(9) Basement Finish

	Recreation SF
	Living SF
	Walkout Doors (B)
	No Floor SF
	Walkout Doors (A)

(10) Floor Support

Joists:
Unsupported Len:
Cntr.Sup:

(11) Heating/Cooling

X	Gas		Oil		Elec.
	Wood		Coal		Steam

X	Forced Warm Air
	Wall Furnace
	Warm & Cool Air
	Heat Pump

	Central Air
	Wood Furnace

(12) Electric

150	Amps Service

No./Qual. of Fixtures

	Ex.	X	Ord.		Min

No. of Elec. Outlets

	Many	X	Ave.		Few

(13) Plumbing

	Average Fixture(s)
1	3 Fixture Bath
	2 Fixture Bath
	Softener, Auto
	Softener, Manual
	Solar Water Heat
	No Plumbing
	Extra Toilet
	Extra Sink
	Separate Shower
	Ceramic Tile Floor
	Ceramic Tile Wains
	Ceramic Tub Alcove
	Vent Fan

(14) Water/Sewer

	Public Water
	Public Sewer
1	Water Well
1	1000 Gal Septic
	2000 Gal Septic

Lump Sum Items:

(15) Built-ins

	Appliance Allow.
	Cook Top
	Dishwasher
	Garbage Disposal
	Bath Heater
	Vent Fan
	Hot Tub
	Unvented Hood
	Vented Hood
	Intercom
	Jacuzzi Tub
	Jacuzzi repl.Tub
	Oven
	Microwave
	Standard Range
	Self Clean Range
	Sauna
	Trash Compactor
	Central Vacuum
	Security System

(15) Fireplaces

	Interior 1 Story
	Interior 2 Story
	2nd/Same Stack
	Two Sided
	Exterior 1 Story
	Exterior 2 Story
	Prefab 1 Story
	Prefab 2 Story
	Heat Circulator
	Raised Hearth
	Wood Stove
	Direct-Vented Gas

Class: Low
Effec. Age: 25
Floor Area:
Total Base New : 46,919 E.C.F.
Total Depr Cost: 16,387 X 1.297
Estimated T.C.V: 21,254

(16) Porches/Decks

Area	Type
128	WPP
156	Treated Wood

(17) Garage

Year Built:
Car Capacity:
Class:
Exterior:
Brick Ven.:
Stone Ven.:
Common Wall:
Foundation:
Finished ?:
Auto. Doors:
Mech. Doors:
Area:
% Good:
Storage Area:
No Conc. Floor:

Bsmnt Garage:

Carport Area:
Roof:

Cost Est. for Res. Bldg: 1 Mobile Home PLAIN Cls Low Blt 0
(11) Heating System: Wall Furnace
Ground Area = 470 SF Floor Area = 470 SF.
Phy/Ab.Phy/Func/Econ/Comb. % Good=35/100/100/100/35
Building Areas

Type	Ext. Walls	Roof/Fnd.	Size	Cost New	Depr. Cost	
Main Home	Ribbed	Metal	470			
			Total:	28,778	10,072	
Other Additions/Adjustments						
Skirting, Metal or Vinyl, Vertical			114	1,238	433	
Water/Sewer						
1000 Gal Septic			1	4,293	1,503	
Water Well, 100 Feet			1	5,545	1,941	
Porches						
WPP			128	2,808	983	
Deck						
Treated Wood			156	3,388	1,186	
Local Cost Items						
FREE STANDING ROOF			120	869	269	*3
			Totals:	46,919	16,387	

Notes:
ECF (RESIDENTIAL) 1.297 => TCV: 21,254

*** Information herein deemed reliable but not guaranteed***

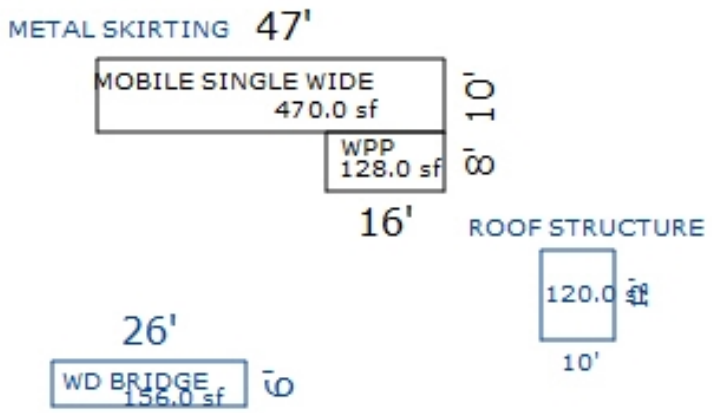

Sketch by Apex Sketch

*** Information herein deemed reliable but not guaranteed***

Parcel Number: 2410-26-2203 Jurisdiction: GREENWOOD TWP County: WEXFORD Printed on 02/15/2024

Grantor	Grantee	Sale Price	Sale Date	Inst. Type	Terms of Sale	Liber & Page	Verified By	Prcnt. Trans.
BURKERT, RONALD L.	FULLER ET AL, LANCE D.	45,000	04/08/1992	WD	03-ARM'S LENGTH	328:989	DEED	0.0

Property Address

4252 E 10 RD

Owner's Name/Address

PAUL, THELMA
& DOUGLAS K. PAUL
4252 E 10 RD
MANTON MI 49663

Tax Description

W 1/2 OF W 1/2 OF E 1/2 OF NW 1/4 20 A. M/L GW. SEC. 26 T24N R10W -MANTON-

Comments/Influences

Class: RESIDENTIAL-IMPROV Zoning:

School: MANTON CONSOLIDATED SCHOOLS

P.R.E. 100% / /

:

2024 Est TCV 383,635 TCV/TFA: 176.95

Building Permit(s)	Date	Number	Status
RESIDENTIAL - NEW	07/13/1998	PM2402	
RESIDENTIAL - NEW	06/01/1998	PE11267	
RESIDENTIAL - NEW	04/23/1998	PM2221	
RESIDENTIAL - NEW	04/23/1998	PP854	

X Improved | Vacant

Public Improvements

- Dirt Road
- X Gravel Road
- X Paved Road
- Storm Sewer
- Sidewalk
- Water
- Sewer
- X Electric
- Gas
- Curb
- Street Lights
- Standard Utilities
- Underground Utils.

Topography of Site

- Level
- X Rolling
- X Low
- X High
- Landscaped
- Swamp
- X Wooded
- Pond
- Waterfront
- Ravine
- Wetland
- Flood Plain
- X OPEN/PINES

Who	When	What
GLA	07/10/2019	INSPECTION
GLA	07/10/2019	INSPECTION
GLA	03/22/2014	INSPECTION

Land Value Estimates for Land Table 4010.LAND VALUES

Description	Frontage	Depth	* Factors * Front	Depth	Rate	%Adj.	Reason	Value
ACREAGE			19.750 Acres		3,200	100		63,200
ROW			0.250 Acres		0	100		0
			20.00 Total Acres		Total Est. Land Value =			63,200

Land Improvement Cost Estimates

Description	Rate	Size	% Good	Cash Value
D/W/P: Asphalt Paving	3.12	3450	56	6,028
D/W/P: 4in Concrete	7.01	2569	41	7,384
Wood Frame	25.17	192	41	1,982
Total Estimated Land Improvements True Cash Value =				15,394

Year	Land Value	Building Value	Assessed Value	Board of Review	Tribunal/ Other	Taxable Value
2024	31,600	160,200	191,800			103,827C
2023	25,700	131,700	157,400	157,400M		98,883C
2022	21,800	111,600	133,400			94,175C
2021	19,900	112,400	132,300			91,167C

The Equalizer. Copyright (c) 1999 - 2009.
Licensed To: Township of Greenwood, County of Wexford, Michigan

*** Information herein deemed reliable but not guaranteed***

Building Type

X	Single Family
	Mobile Home
	Town Home
	Duplex
	A-Frame
X	Wood Frame

Building Style: PLAIN

Yr Built	Remodeled
0	0

Condition: Good

Room List

	Basement
	1st Floor
	2nd Floor
	Bedrooms

(1) Exterior

	Wood/Shingle
X	Aluminum/Vinyl
	Brick
X	Insulation

(2) Windows

X	Many Avg. Few		Large Avg. Small

	Wood Sash
	Metal Sash
X	Vinyl Sash
	Double Hung
	Horiz. Slide
	Casement
	Double Glass
	Patio Doors
X	Storms & Screens

(3) Roof

X	Gable Hip Flat		Gambrel Mansard Shed

X	Asphalt Shingle

Chimney:

(3) Roof (cont.)

	Eavestrough
X	Insulation
0	Front Overhang
0	Other Overhang

(4) Interior

X	Drywall Paneled		Plaster Wood T&G

Trim & Decoration

	Ex	X	Ord		Min

Size of Closets

	Lg	X	Ord		Small

Doors:		Solid	X	H.C.	

(5) Floors

Kitchen:
Other: Linoleum
Other: Carpeted

(6) Ceilings

X	Drywall

(7) Excavation

Basement: 992 S.F.
Crawl: 0 S.F.
Slab: 0 S.F.
Height to Joists: 0.0

(8) Basement

	Conc. Block
	Poured Conc.
	Stone
	Treated Wood
	Concrete Floor

(9) Basement Finish

	Recreation SF
	Living SF
	Walkout Doors (B)
	No Floor SF
	Walkout Doors (A)

(10) Floor Support

Joists:
Unsupported Len:
Cntr.Sup:

(11) Heating/Cooling

X	Gas Wood		Oil Coal		Elec. Steam	

	Forced Air w/o Ducts
X	Forced Air w/ Ducts
	Forced Hot Water
	Electric Baseboard
	Elec. Ceil. Radiant
	Radiant (in-floor)
	Electric Wall Heat
	Space Heater
	Wall/Floor Furnace
	Forced Heat & Cool
	Heat Pump
	No Heating/Cooling

	Central Air
	Wood Furnace

(12) Electric

150	Amps Service

No./Qual. of Fixtures

	Ex.	X	Ord.		Min

No. of Elec. Outlets

	Many	X	Ave.		Few

(13) Plumbing

	Average Fixture(s)
2	3 Fixture Bath
1	2 Fixture Bath
	Softener, Auto
	Softener, Manual
	Solar Water Heat
	No Plumbing
	Extra Toilet
	Extra Sink
	Separate Shower
	Ceramic Tile Floor
	Ceramic Tile Wains
	Ceramic Tub Alcove
	Vent Fan

(14) Water/Sewer

	Public Water
	Public Sewer
1	Water Well
1	1000 Gal Septic
	2000 Gal Septic

Lump Sum Items:

(15) Built-ins

	Appliance Allow.
	Cook Top
	Dishwasher
	Garbage Disposal
	Bath Heater
	Vent Fan
	Hot Tub
	Unvented Hood
	Vented Hood
	Intercom
	Jacuzzi Tub
	Jacuzzi repl.Tub
	Oven
	Microwave
	Standard Range
	Self Clean Range
	Sauna
	Trash Compactor
	Central Vacuum
	Security System

(15) Fireplaces

	Interior 1 Story
	Interior 2 Story
	2nd/Same Stack
	Two Sided
	Exterior 1 Story
	Exterior 2 Story
	Prefab 1 Story
	Prefab 2 Story
	Heat Circulator
	Raised Hearth
	Wood Stove
	Direct-Vented Gas

Class: C
Effec. Age: 25
Floor Area: 1,736
Total Base New : 305,511 E.C.F.
Total Depr Cost: 229,130 X 1.297
Estimated T.C.V: 297,182

(16) Porches/Decks

Area	Type
826	WPP

(17) Garage

Year Built:
Car Capacity:
Class: C
Exterior: Siding
Brick Ven.: 0
Stone Ven.: 0
Common Wall: 1 Wall
Foundation: 42 Inch
Finished ?:
Auto. Doors: 0
Mech. Doors: 0
Area: 888
% Good: 0
Storage Area: 0
No Conc. Floor: 0

Bsmnt Garage:

Carport Area:
Roof:

Cost Est. for Res. Bldg: 1 Single Family PLAIN Cls C Blt 0
(11) Heating System: Forced Air w/ Ducts
Ground Area = 992 SF Floor Area = 1736 SF.
Phy/Ab.Phy/Func/Econ/Comb. % Good=75/100/100/100/75
Building Areas

Stories	Exterior	Foundation	Size	Cost New	Depr. Cost
1.75 Story	Siding	Basement	992		
			Total:	213,880	160,409
Other Additions/Adjustments					
Plumbing					
3 Fixture Bath			1	4,678	3,508
2 Fixture Bath			1	3,130	2,347
Water/Sewer					
1000 Gal Septic			1	4,899	3,674
Water Well, 100 Feet			1	5,849	4,387
Garages					
Class: C Exterior: Siding Foundation: 42 Inch (Unfinished)					
Base Cost			888	33,966	25,474
Common Wall: 1 Wall			1	-2,705	-2,029
Class: C Exterior: Pole (Unfinished)					
Base Cost			768	20,659	15,494
Storage Over Garage			576	7,972	5,979
Porches					
WPP			826	13,183	9,887
			Totals:	305,511	229,130

Notes:
ECF (RESIDENTIAL) 1.297 => TCV: 297,182

*** Information herein deemed reliable but not guaranteed***

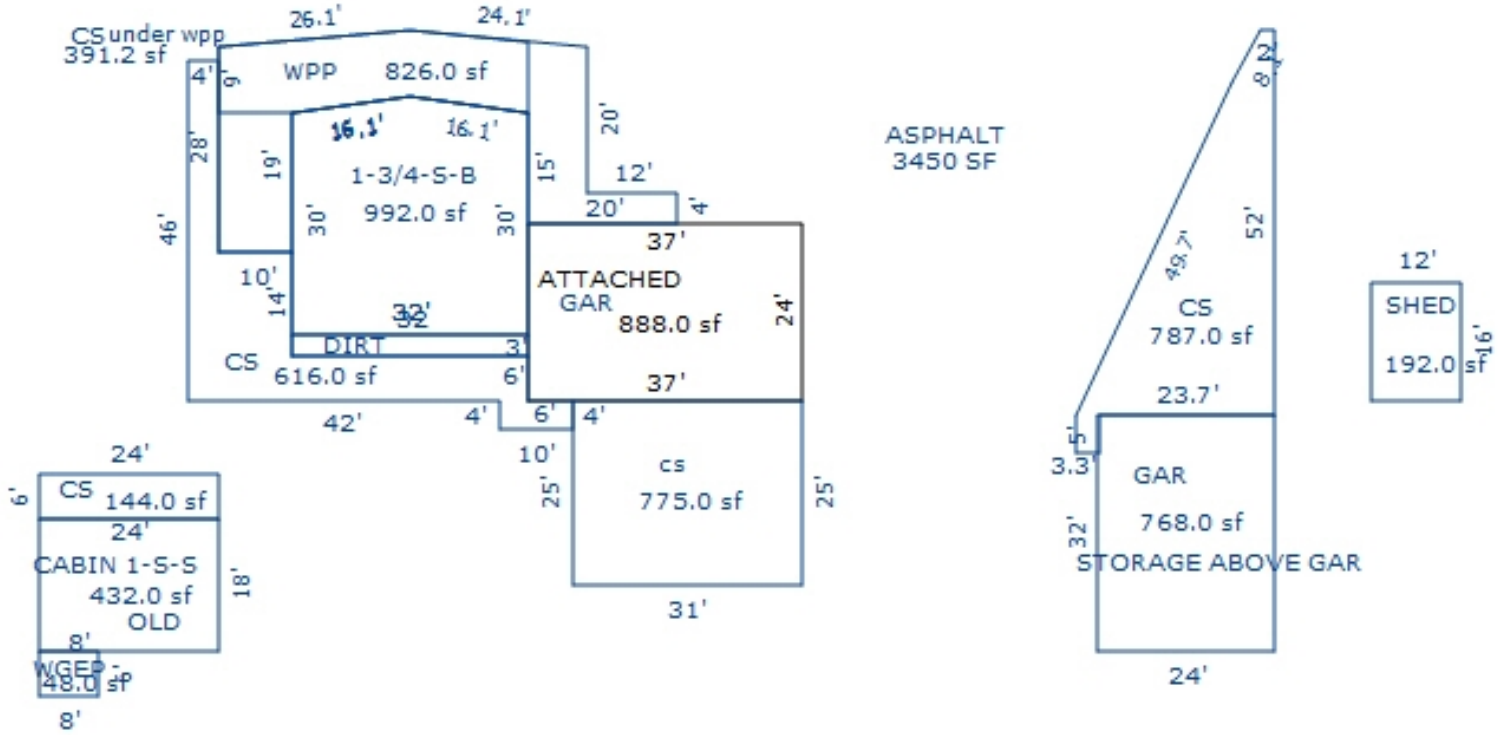

Sketch by Apex Sketch

*** Information herein deemed reliable but not guaranteed***

Building Type

X	Single Family
	Mobile Home
	Town Home
	Duplex
	A-Frame
X	Wood Frame

Building Style: PLAIN

Yr Built	Remodeled
0	0

Condition: Good

Room List

	Basement
	1st Floor
	2nd Floor
	Bedrooms

(1) Exterior

	Wood/Shingle
X	Aluminum/Vinyl
	Brick
X	Insulation

(2) Windows

	Many		Large
X	Avg.	X	Avg.
	Few		Small

	Wood Sash
	Metal Sash
X	Vinyl Sash
	Double Hung
	Horiz. Slide
	Casement
	Double Glass
	Patio Doors
X	Storms & Screens

(3) Roof

X	Gable		Gambrel
	Hip		Mansard
	Flat		Shed

X	Asphalt Shingle

Chimney:

(3) Roof (cont.)

	Eavestrough
X	Insulation
0	Front Overhang
0	Other Overhang

(4) Interior

X	Drywall		Plaster
	Paneled		Wood T&G

Trim & Decoration

	Ex	X	Ord		Min

Size of Closets

	Lg	X	Ord		Small

Doors:		Solid	X	H.C.	

(5) Floors

Kitchen:
Other: Linoleum
Other: Carpeted

(6) Ceilings

X	Drywall

(7) Excavation

Basement: 0 S.F.
Crawl: 0 S.F.
Slab: 432 S.F.
Height to Joists: 0.0

(8) Basement

	Conc. Block
	Poured Conc.
	Stone
	Treated Wood
	Concrete Floor

(9) Basement Finish

	Recreation SF
	Living SF
	Walkout Doors (B)
	No Floor SF
	Walkout Doors (A)

(10) Floor Support

Joists:
Unsupported Len:
Cntr.Sup:

(11) Heating/Cooling

X	Gas		Oil		Elec.
	Wood		Coal		Steam

	Forced Air w/o Ducts
X	Forced Air w/ Ducts
	Forced Hot Water
	Electric Baseboard
	Elec. Ceil. Radiant
	Radiant (in-floor)
	Electric Wall Heat
	Space Heater
	Wall/Floor Furnace
	Forced Heat & Cool
	Heat Pump
	No Heating/Cooling

	Central Air
	Wood Furnace

(12) Electric

150	Amps Service

No./Qual. of Fixtures

	Ex.	X	Ord.		Min

No. of Elec. Outlets

	Many	X	Ave.		Few

(13) Plumbing

1	Average Fixture(s)
	3 Fixture Bath
	2 Fixture Bath
	Softener, Auto
	Softener, Manual
	Solar Water Heat
	No Plumbing
	Extra Toilet
	Extra Sink
	Separate Shower
	Ceramic Tile Floor
	Ceramic Tile Wains
	Ceramic Tub Alcove
	Vent Fan

(14) Water/Sewer

	Public Water
	Public Sewer
	Water Well
	1000 Gal Septic
	2000 Gal Septic

Lump Sum Items:

(15) Built-ins

	Appliance Allow.
	Cook Top
	Dishwasher
	Garbage Disposal
	Bath Heater
	Vent Fan
	Hot Tub
	Unvented Hood
	Vented Hood
	Intercom
	Jacuzzi Tub
	Jacuzzi repl.Tub
	Oven
	Microwave
	Standard Range
	Self Clean Range
	Sauna
	Trash Compactor
	Central Vacuum
	Security System

(15) Fireplaces

	Interior 1 Story
	Interior 2 Story
	2nd/Same Stack
	Two Sided
	Exterior 1 Story
	Exterior 2 Story
	Prefab 1 Story
	Prefab 2 Story
	Heat Circulator
	Raised Hearth
	Wood Stove
	Direct-Vented Gas

Class: CD
Effec. Age: 59
Floor Area: 432
Total Base New : 67,023 E.C.F.
Total Depr Cost: 6,059 X 1.297
Estimated T.C.V: 7,859

(16) Porches/Decks

Area	Type
48	WGEP (2 Story)

(17) Garage

Year Built:
Car Capacity:
Class:
Exterior:
Brick Ven.:
Stone Ven.:
Common Wall:
Foundation:
Finished ?:
Auto. Doors:
Mech. Doors:
Area:
% Good:
Storage Area:
No Conc. Floor:

Bsmnt Garage:

Carport Area:
Roof:

Cost Est. for Res. Bldg: 2 Single Family PLAIN Cls CD Blt 0
(11) Heating System: Forced Air w/ Ducts
Ground Area = 432 SF Floor Area = 432 SF.
Phy/Ab.Phy/Func/Econ/Comb. % Good=45/60/60/60/9.72
Functional Depreciation because of: OLD LOG CABIN NOT USED
Economic Depreciation because of: OLD LOG CABIN
Building Areas

Stories	Exterior	Foundation	Size	Cost New	Depr. Cost	
1 Story	Pine Logs	Slab	432			
			Total:	58,231	5,660	
Other Additions/Adjustments						
Porches						
WGEP (2 Story)			48	8,792	399	*2
			Totals:	67,023	6,059	

Notes:

ECF (RESIDENTIAL) 1.297 => TCV: 7,859

*** Information herein deemed reliable but not guaranteed***

Parcel Number: 2410-26-2204 Jurisdiction: GREENWOOD TWP County: WEXFORD Printed on 02/15/2024

Grantor	Grantee	Sale Price	Sale Date	Inst. Type	Terms of Sale	Liber & Page	Verified By	Prcnt. Trans.
BOURDON, MARK A & TONIA A	JENSEN KATELYN & RICK	10,000	05/20/2023	QC	21-NOT USED/OTHER	698-1098	DEED	100.0
BERGHUIS, SAMUEL & PHILIP	BOURDON, MARK A & TONIA A	0	10/24/2013	MLC	21-NOT USED/OTHER	663/2021	DEED	100.0

Property Address

7830 N 33 RD

Owner's Name/Address

JENSEN KATELYN & RICK
7276 N 33RD RD
MANTON MI 49663

Tax Description

N 231 FT OF S 462 FT OF NW 1/4 OF NW 1/4
7 A. GW. SEC. 26 T24N R10W -MANTON-

Comments/Influences

The Equalizer. Copyright (c) 1999 - 2009.
Licensed To: Township of Greenwood, County of Wexford, Michigan

Class: RESIDENTIAL-IMPROV Zoning:

School: MANTON CONSOLIDATED SCHOOLS

P.R.E. 0%

:

2024 Est TCV 110,446 TCV/TFA: 153.40

Building Permit(s)	Date	Number	Status

X Improved | Vacant

	Public Improvements
	Dirt Road
X	Gravel Road
	Paved Road
	Storm Sewer
	Sidewalk
	Water
	Sewer
X	Electric
	Gas
	Curb
	Street Lights
	Standard Utilities
	Underground Utils.

	Topography of Site
	Level
X	Rolling
	Low
	High
	Landscaped
	Swamp
X	Wooded
	Pond
	Waterfront
	Ravine
	Wetland
	Flood Plain
X	OPEN

Who	When	What
GLA	07/10/2019	INSPECTION
GLA	07/10/2019	INSPECTION
GLA	08/02/2014	INSPECTION

Land Value Estimates for Land Table 4010.LAND VALUES

Description	Frontage	Depth	* Factors * Front	Depth	Rate	%Adj.	Reason	Value
	7.00	0.00	1.0000	1.0000	0	100		0
ACREAGE			6.825 Acres		5,112	100		34,889
ROW			0.175 Acres		0	100		0
7 Actual Front Feet, 7.00 Total Acres							Total Est. Land Value =	34,889

Year	Land Value	Building Value	Assessed Value	Board of Review	Tribunal/ Other	Taxable Value
2024	17,400	37,800	55,200			55,200S
2023	11,800	30,900	42,700			30,234C
2022	10,300	26,100	36,400			28,795C
2021	11,600	26,500	38,100			27,876C

*** Information herein deemed reliable but not guaranteed***

Building Type

X	Single Family
	Mobile Home
	Town Home
	Duplex
	A-Frame
X	Wood Frame

Building Style: PLAIN

Yr Built	Remodeled
1985	0

Condition: Good

Room List

	Basement
	1st Floor
	2nd Floor
	Bedrooms

(1) Exterior

X	Wood/Shingle
	Aluminum/Vinyl
	Brick
X	Insulation

(2) Windows

	Many		Large
X	Avg.	X	Avg.
	Few		Small

	Wood Sash
	Metal Sash
X	Vinyl Sash
	Double Hung
	Horiz. Slide
	Casement
	Double Glass
	Patio Doors
X	Storms & Screens

(3) Roof

X	Gable		Gambrel
	Hip		Mansard
	Flat		Shed

X	Asphalt Shingle

Chimney:

(3) Roof (cont.)

	Eavestrough
X	Insulation
0	Front Overhang
0	Other Overhang

(4) Interior

X	Drywall		Plaster
	Paneled		Wood T&G

Trim & Decoration

	Ex	X	Ord		Min

Size of Closets

	Lg	X	Ord		Small

Doors:		Solid	X	H.C.	

(5) Floors

Kitchen:
Other: Linoleum
Other: Carpeted

(6) Ceilings

X	Drywall

(7) Excavation

Basement: 0 S.F.
Crawl: 720 S.F.
Slab: 0 S.F.
Height to Joists: 0.0

(8) Basement

	Conc. Block
	Poured Conc.
	Stone
	Treated Wood
	Concrete Floor

(9) Basement Finish

	Recreation SF
	Living SF
	Walkout Doors (B)
	No Floor SF
	Walkout Doors (A)

(10) Floor Support

Joists:
Unsupported Len:
Cntr.Sup:

(11) Heating/Cooling

X	Gas		Oil		Elec.
	Wood		Coal		Steam

	Forced Air w/o Ducts
X	Forced Air w/ Ducts
	Forced Hot Water
	Electric Baseboard
	Elec. Ceil. Radiant
	Radiant (in-floor)
	Electric Wall Heat
	Space Heater
	Wall/Floor Furnace
	Forced Heat & Cool
	Heat Pump
	No Heating/Cooling

	Central Air
	Wood Furnace

(12) Electric

150	Amps Service

No./Qual. of Fixtures

	Ex.	X	Ord.		Min

No. of Elec. Outlets

	Many	X	Ave.		Few

(13) Plumbing

	Average Fixture(s)
1	3 Fixture Bath
	2 Fixture Bath
	Softener, Auto
	Softener, Manual
	Solar Water Heat
	No Plumbing
	Extra Toilet
	Extra Sink
	Separate Shower
	Ceramic Tile Floor
	Ceramic Tile Wains
	Ceramic Tub Alcove
	Vent Fan

(14) Water/Sewer

	Public Water
	Public Sewer
1	Water Well
1	1000 Gal Septic
	2000 Gal Septic

Lump Sum Items:

(15) Built-ins

	Appliance Allow.
	Cook Top
	Dishwasher
	Garbage Disposal
	Bath Heater
	Vent Fan
	Hot Tub
	Unvented Hood
	Vented Hood
	Intercom
	Jacuzzi Tub
	Jacuzzi repl.Tub
	Oven
	Microwave
	Standard Range
	Self Clean Range
	Sauna
	Trash Compactor
	Central Vacuum
	Security System

(15) Fireplaces

	Interior 1 Story
	Interior 2 Story
	2nd/Same Stack
	Two Sided
	Exterior 1 Story
	Exterior 2 Story
	Prefab 1 Story
	Prefab 2 Story
	Heat Circulator
	Raised Hearth
	Wood Stove
	Direct-Vented Gas

Class: D
Effec. Age: 38
Floor Area: 720
Total Base New : 93,959 E.C.F.
Total Depr Cost: 58,255 X 1.297
Estimated T.C.V: 75,557

(16) Porches/Decks

Area	Type
9	WPP

(17) Garage

Year Built:
Car Capacity:
Class:
Exterior:
Brick Ven.:
Stone Ven.:
Common Wall:
Foundation:
Finished ?:
Auto. Doors:
Mech. Doors:
Area:
% Good:
Storage Area:
No Conc. Floor:

Bsmnt Garage:

Carport Area:
Roof:

Cost Est. for Res. Bldg: 1 Single Family PLAIN Cls D Blt 1985
(11) Heating System: Forced Air w/ Ducts
Ground Area = 720 SF Floor Area = 720 SF.
Phy/Ab.Phy/Func/Econ/Comb. % Good=62/100/100/100/62
Building Areas

Stories	Exterior	Foundation	Size	Cost New	Depr. Cost
1 Story	Siding	Crawl Space	720		
			Total:	83,694	51,890
Other Additions/Adjustments					
Water/Sewer					
1000 Gal Septic			1	4,293	2,662
Water Well, 100 Feet			1	5,545	3,438
Porches					
WPP			9	427	265
			Totals:	93,959	58,255

Notes:

ECF (RESIDENTIAL) 1.297 => TCV: 75,557

*** Information herein deemed reliable but not guaranteed***

OUT HOUSE N/V

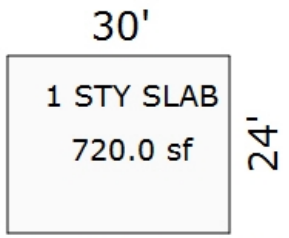

WPP 3 X 3 = 9 SF

Sketch by Apex Sketch

*** Information herein deemed reliable but not guaranteed***

Parcel Number: 2410-26-2205 Jurisdiction: GREENWOOD TWP County: WEXFORD Printed on 02/15/2024

Grantor	Grantee	Sale Price	Sale Date	Inst. Type	Terms of Sale	Liber & Page	Verified By	Prcnt. Trans.
FULLER, LANCE. D.	FULLER LANCE D TRUST	0	07/24/2023	WD	15-LADY BIRD	695/2210	PROPERTY TRANSFER	0.0

Property Address

4316 E 10 RD

Owner's Name/Address

FULLER, LANCE. D.
4316 E 10 RD
MANTON MI 49663

Tax Description

E 1/2 OF W 1/2 OF E 1/2 OF NW 1/4 20 A. M/L GW. SEC. 26 T24N R10W -MANTON-

Comments/Influences

The Equalizer. Copyright (c) 1999 - 2009. Licensed To: Township of Greenwood, County of Wexford, Michigan

Class: RESIDENTIAL-IMPROV Zoning:

School: MANTON CONSOLIDATED SCHOOLS

P.R.E. 100% / /

:

2024 Est TCV 354,213 TCV/TFA: 206.90

Building Permit(s)	Date	Number	Status
OTHER	08/02/2022	PB22-0217	COMPLETE

X Improved | Vacant

	Public Improvements
	Dirt Road
X	Gravel Road
	Paved Road
	Storm Sewer
	Sidewalk
	Water
	Sewer
X	Electric
	Gas
	Curb
	Street Lights
	Standard Utilities
	Underground Utils.

	Topography of Site
	Level
X	Rolling
X	Low
X	High
	Landscaped
	Swamp
X	Wooded
	Pond
	Waterfront
	Ravine
	Wetland
	Flood Plain
X	OPEN/PINES

Who	When	What
GLA	07/10/2019	INSPECTION
GLA	07/10/2019	INSPECTION
GLA	08/03/2014	INSPECTION

Land Value Estimates for Land Table 4010.LAND VALUES

Description	Frontage	Depth	* Factors * Front	Depth	Rate	%Adj.	Reason	Value
	250.00	0.00	1.0000	1.0000	0	100		0
ACREAGE			19.720 Acres		3,200	100		63,104
ROW			0.280 Acres		0	100		0

250 Actual Front Feet, 20.00 Total Acres Total Est. Land Value = 63,104

Land Improvement Cost Estimates

Description	Rate	Size	% Good	Cash Value
D/W/P: 3.5 Concrete	6.63	1522	75	7,568
Wood Frame	23.41	336	97	7,630

Total Estimated Land Improvements True Cash Value = 15,198

Year	Land Value	Building Value	Assessed Value	Board of Review	Tribunal/ Other	Taxable Value
2024	31,600	145,500	177,100			114,809C
2023	25,600	119,700	145,300			109,342C
2022	22,700	95,800	118,500			98,136C
2021	20,900	96,600	117,500			95,001C

*** Information herein deemed reliable but not guaranteed***

Building Type

X	Single Family
	Mobile Home
	Town Home
	Duplex
	A-Frame
X	Wood Frame

Building Style: PLAIN

Yr Built	Remodeled
1996	0

Condition: Good

Room List

	Basement
	1st Floor
	2nd Floor
	Bedrooms

(1) Exterior

	Wood/Shingle
X	Aluminum/Vinyl
	Brick
X	Insulation

(2) Windows

X	Many Avg. Few	X	Large Avg. Small

	Wood Sash
	Metal Sash
X	Vinyl Sash
	Double Hung
	Horiz. Slide
	Casement
	Double Glass
	Patio Doors
X	Storms & Screens

(3) Roof

X	Gable		Gambrel
	Hip		Mansard
	Flat		Shed

X	Asphalt Shingle

Chimney:

(3) Roof (cont.)

	Eavestrough
X	Insulation
0	Front Overhang
0	Other Overhang

(4) Interior

X	Drywall		Plaster
	Paneled		Wood T&G

Trim & Decoration

	Ex	X	Ord		Min

Size of Closets

	Lg	X	Ord		Small

Doors:		Solid	X	H.C.	

(5) Floors

Kitchen:
Other: Linoleum
Other: Carpeted

(6) Ceilings

X	Drywall

(7) Excavation

Basement: 1712 S.F.
Crawl: 0 S.F.
Slab: 0 S.F.
Height to Joists: 0.0

(8) Basement

	Conc. Block
	Poured Conc.
	Stone
	Treated Wood
	Concrete Floor

(9) Basement Finish

	Recreation SF
	Living SF
1	Walkout Doors (B)
	No Floor SF
	Walkout Doors (A)

(10) Floor Support

Joists:
Unsupported Len:
Cntr.Sup:

(11) Heating/Cooling

X	Gas		Oil		Elec.
	Wood		Coal		Steam

	Forced Air w/o Ducts
X	Forced Air w/ Ducts
	Forced Hot Water
	Electric Baseboard
	Elec. Ceil. Radiant
	Radiant (in-floor)
	Electric Wall Heat
	Space Heater
	Wall/Floor Furnace
	Forced Heat & Cool
	Heat Pump
	No Heating/Cooling
	Central Air
	Wood Furnace

(12) Electric

150	Amps Service

No./Qual. of Fixtures

	Ex.	X	Ord.		Min

No. of Elec. Outlets

	Many	X	Ave.		Few

(13) Plumbing

	Average Fixture(s)
2	3 Fixture Bath
	2 Fixture Bath
	Softener, Auto
	Softener, Manual
	Solar Water Heat
	No Plumbing
	Extra Toilet
	Extra Sink
	Separate Shower
	Ceramic Tile Floor
	Ceramic Tile Wains
	Ceramic Tub Alcove
	Vent Fan

(14) Water/Sewer

	Public Water
	Public Sewer
1	Water Well
1	1000 Gal Septic
	2000 Gal Septic

Lump Sum Items:

(15) Built-ins

	Appliance Allow.
	Cook Top
	Dishwasher
	Garbage Disposal
	Bath Heater
	Vent Fan
	Hot Tub
	Unvented Hood
	Vented Hood
	Intercom
	Jacuzzi Tub
	Jacuzzi repl.Tub
	Oven
	Microwave
	Standard Range
	Self Clean Range
	Sauna
	Trash Compactor
	Central Vacuum
	Security System

(15) Fireplaces

	Interior 1 Story
	Interior 2 Story
	2nd/Same Stack
	Two Sided
	Exterior 1 Story
	Exterior 2 Story
1	Prefab 1 Story
	Prefab 2 Story
	Heat Circulator
	Raised Hearth
	Wood Stove
	Direct-Vented Gas

Class: CD
Effec. Age: 25
Floor Area: 1,712
Total Base New : 283,641 E.C.F.
Total Depr Cost: 212,730 X 1.297
Estimated T.C.V: 275,911

(16) Porches/Decks

Area	Type
224	WPP
66	CCP (1 Story)

(17) Garage

Year Built:
Car Capacity:
Class: CD
Exterior: Siding
Brick Ven.: 0
Stone Ven.: 0
Common Wall: 1 Wall
Foundation: 42 Inch
Finished ?:
Auto. Doors: 0
Mech. Doors: 0
Area: 528
% Good: 0
Storage Area: 0
No Conc. Floor: 0

Bsmnt Garage:

Carport Area:
Roof:

Cost Est. for Res. Bldg: 1 Single Family PLAIN Cls CD Blt 1996
(11) Heating System: Forced Air w/ Ducts
Ground Area = 1712 SF Floor Area = 1712 SF.
Phy/Ab.Phy/Func/Econ/Comb. % Good=75/100/100/100/75
Building Areas

Stories	Exterior	Foundation	Size	Cost New	Depr. Cost
1 Story	Siding	Basement	1,712		
			Total:	213,461	160,096
Other Additions/Adjustments					
Basement, Outside Entrance, Below Grade			1	2,176	1,632
Plumbing					
3 Fixture Bath			1	3,887	2,915
Water/Sewer					
1000 Gal Septic			1	4,582	3,436
Water Well, 100 Feet			1	5,680	4,260
Porches					
WPP			224	4,281	3,211
CCP (1 Story)			66	1,791	1,343
Garages					
Class: CD Exterior: Siding Foundation: 42 Inch (Unfinished)					
Base Cost			528	21,120	15,840
Common Wall: 1 Wall			1	-2,529	-1,897
Class: CD Exterior: Pole (Unfinished)					
Base Cost			1200	26,100	19,575
Fireplaces					
Prefab 1 Story			1	2,204	1,653
Local Cost Items					
POLE LEANTO DIRT			240	888	666
			Totals:	283,641	212,730

Notes:
ECF (RESIDENTIAL) 1.297 => TCV: 275,911

*** Information herein deemed reliable but not guaranteed***

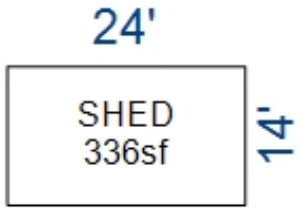

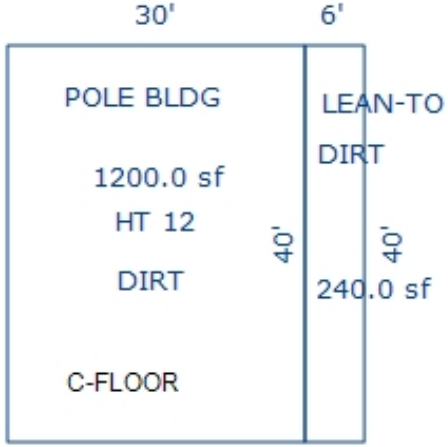

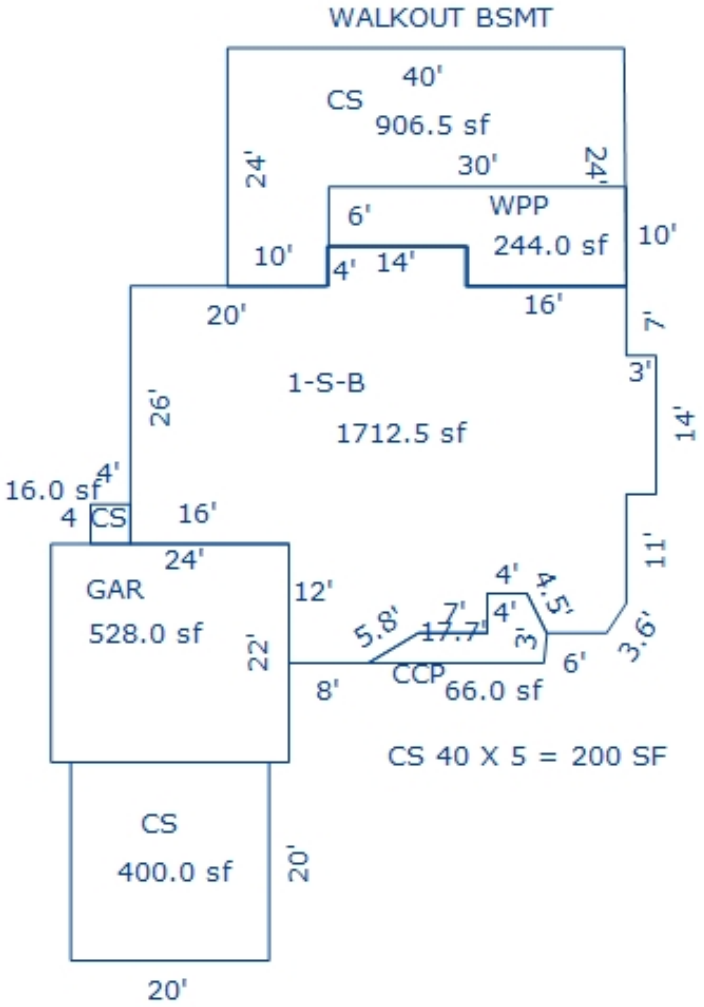

*** Information herein deemed reliable but not guaranteed***

Parcel Number: 2410-26-2302 Jurisdiction: GREENWOOD TWP County: WEXFORD Printed on 02/15/2024

Grantor	Grantee	Sale Price	Sale Date	Inst. Type	Terms of Sale	Liber & Page	Verified By	Prcnt. Trans.
SPRINGER, MAURICE P ETAL	BRIGHT, JACOB	333,720	01/19/2022	WD	03-ARM'S LENGTH	692/146	DEED	100.0
SPRINGER, MAURICE P.	SPRINGER, MAURICE P ETAL	0	05/16/2017	WD	21-NOT USED/OTHER	680/929	DEED	0.0
THALMAN, ROBERT C.	SPRINGER, MAURICE P.	60,000	10/31/1991	WD	03-ARM'S LENGTH	327:266	DEED	0.0

Property Address

7510 N 33 RD

Owner's Name/Address

BRIGHT, JACOB
6221 SNOW AVE SE
ALTO MI 49302

Tax Description

S 495 FT OF SW 1/4 OF NW 1/4 --14.54 A M/L-- GW. SEC. 26 T24N R10W -MANTON-

Comments/Influences

The Equalizer. Copyright (c) 1999 - 2009.
Licensed To: Township of Greenwood, County of Wexford, Michigan

Class: RESIDENTIAL-IMPROV Zoning:
School: MANTON CONSOLIDATED SCHOOLS
P.R.E. 100% 02/09/2022
:
2024 Est TCV 307,439 TCV/TFA: 192.63

Building Permit(s)	Date	Number	Status
Garage, Detached	06/02/2010	PB10-0102	
RESIDENTIAL - NEW	07/19/2004	PB12337	
RESIDENTIAL - REMODEL	09/04/2001	PB10558	
RESIDENTIAL - REMODEL	07/25/2001	PE13839	

X	Improved		Vacant

	Public Improvements
	Dirt Road
X	Gravel Road
X	Paved Road
	Storm Sewer
	Sidewalk
	Water
	Sewer
X	Electric
	Gas
	Curb
	Street Lights
	Standard Utilities
	Underground Utils.

	Topography of Site
	Level
X	Rolling
X	Low
X	High
	Landscaped
	Swamp
X	Wooded
	Pond
	Waterfront
	Ravine
	Wetland
	Flood Plain
X	OPEN/PINES

Who	When	What
GLA	07/10/2019	INSPECTION
GLA	07/10/2019	INSPECTION
GLA	10/13/2015	INSPECTION

Land Value Estimates for Land Table 4010.LAND VALUES

Description	Frontage	Depth	* Factors * Front	Depth	Rate	%Adj.	Reason	Value
	495.00	0.00	1.0000	1.0000	0	100		0
ACREAGE			14.160 Acres		3,370	100		47,723
ROW			0.380 Acres		0	100		0

495 Actual Front Feet, 14.54 Total Acres Total Est. Land Value = 47,723

Year	Land Value	Building Value	Assessed Value	Board of Review	Tribunal/ Other	Taxable Value
2024	23,900	129,800	153,700			130,620C
2023	18,400	106,000	124,400			124,400S
2022	18,300	89,400	107,700			67,158C
2021	19,000	90,400	109,400			65,013C

*** Information herein deemed reliable but not guaranteed***

Building Type

X	Single Family
	Mobile Home
	Town Home
	Duplex
	A-Frame
X	Wood Frame

Building Style: PLAIN

Yr Built	Remodeled
1996	0

Condition: Good

Room List

	Basement
	1st Floor
	2nd Floor
	Bedrooms

(1) Exterior

	Wood/Shingle
X	Aluminum/Vinyl
	Brick
X	Insulation

(2) Windows

X	Many		Large
	Avg.	X	Avg.
	Few		Small

	Wood Sash
	Metal Sash
X	Vinyl Sash
	Double Hung
	Horiz. Slide
	Casement
	Double Glass
	Patio Doors
X	Storms & Screens

(3) Roof

X	Gable		Gambrel
	Hip		Mansard
	Flat		Shed
X	Asphalt Shingle		

Chimney:

(3) Roof (cont.)

	Eavestrough
X	Insulation
0	Front Overhang
0	Other Overhang

(4) Interior

X	Drywall		Plaster
	Paneled		Wood T&G

Trim & Decoration

	Ex	X	Ord		Min

Size of Closets

	Lg	X	Ord		Small

Doors:		Solid	X	H.C.	

(5) Floors

Kitchen:
Other: Linoleum
Other: Carpeted

(6) Ceilings

X	Drywall		

(7) Excavation

Basement: 0 S.F.
Crawl: 1380 S.F.
Slab: 216 S.F.
Height to Joists: 0.0

(8) Basement

	Conc. Block
	Poured Conc.
	Stone
	Treated Wood
	Concrete Floor

(9) Basement Finish

	Recreation SF
	Living SF
	Walkout Doors (B)
	No Floor SF
	Walkout Doors (A)

(10) Floor Support

Joists:
Unsupported Len:
Cntr.Sup:

(11) Heating/Cooling

X	Gas		Oil		Elec.
	Wood		Coal		Steam

	Forced Air w/o Ducts
X	Forced Air w/ Ducts
	Forced Hot Water
	Electric Baseboard
	Elec. Ceil. Radiant
	Radiant (in-floor)
	Electric Wall Heat
	Space Heater
	Wall/Floor Furnace
	Forced Heat & Cool
	Heat Pump
	No Heating/Cooling
	Central Air
	Wood Furnace

(12) Electric

150 Amps Service

No./Qual. of Fixtures

	Ex.	X	Ord.		Min

No. of Elec. Outlets

	Many	X	Ave.		Few

(13) Plumbing

2	Average Fixture(s)
	3 Fixture Bath
	2 Fixture Bath
	Softener, Auto
	Softener, Manual
	Solar Water Heat
	No Plumbing
	Extra Toilet
	Extra Sink
	Separate Shower
	Ceramic Tile Floor
	Ceramic Tile Wains
	Ceramic Tub Alcove
	Vent Fan

(14) Water/Sewer

	Public Water
	Public Sewer
1	Water Well
1	1000 Gal Septic
	2000 Gal Septic

Lump Sum Items:

(15) Built-ins

	Appliance Allow.
	Cook Top
	Dishwasher
	Garbage Disposal
	Bath Heater
	Vent Fan
	Hot Tub
	Unvented Hood
	Vented Hood
	Intercom
	Jacuzzi Tub
	Jacuzzi repl.Tub
	Oven
	Microwave
	Standard Range
	Self Clean Range
	Sauna
	Trash Compactor
	Central Vacuum
	Security System

(15) Fireplaces

	Interior 1 Story
	Interior 2 Story
	2nd/Same Stack
	Two Sided
	Exterior 1 Story
	Exterior 2 Story
	Prefab 1 Story
	Prefab 2 Story
	Heat Circulator
	Raised Hearth
	Wood Stove
	Direct-Vented Gas

Class: CD
Effec. Age: 27
Floor Area: 1,596
Total Base New : 274,304 E.C.F.
Total Depr Cost: 200,244 X 1.297
Estimated T.C.V: 259,716

(16) Porches/Decks

Area	Type
144	WPP
148	WCP (1 Story)
64	CCP (1 Story)

(17) Garage

Year Built:
Car Capacity:
Class: CD
Exterior: Siding
Brick Ven.: 0
Stone Ven.: 0
Common Wall: Detache
Foundation: 18 Inch
Finished ?:
Auto. Doors: 0
Mech. Doors: 0
Area: 576
% Good: 0
Storage Area: 0
No Conc. Floor: 0

Bsmnt Garage:

Carport Area:
Roof:

Cost Est. for Res. Bldg: 1 Single Family PLAIN Cls CD Blt 1996
(11) Heating System: Forced Air w/ Ducts
Ground Area = 1596 SF Floor Area = 1596 SF.
Phy/Ab.Phy/Func/Econ/Comb. % Good=73/100/100/100/73

Building Areas

Stories	Exterior	Foundation	Size	Cost New	Depr. Cost
1 Story	Siding	Crawl Space	1,380		
1 Story	Siding	Slab	216		
			Total:	176,919	129,152

Other Additions/Adjustments

Plumbing			
3 Fixture Bath	1	3,887	2,838
Water/Sewer			
1000 Gal Septic	1	4,582	3,345
Water Well, 100 Feet	1	5,680	4,146
Porches			
WPP	144	3,377	2,465
WCP (1 Story)	148	5,896	4,304
CCP (1 Story)	64	1,741	1,271
Garages			
Class: CD Exterior: Siding Foundation: 18 Inch (Unfinished)			
Base Cost	576	19,935	14,553
Class: CD Exterior: Pole (Unfinished)			
Base Cost	2404	52,287	38,170
	Totals:	274,304	200,244

Notes:

ECF (RESIDENTIAL) 1.297 => TCV: 259,716

*** Information herein deemed reliable but not guaranteed***

2410-26-2302

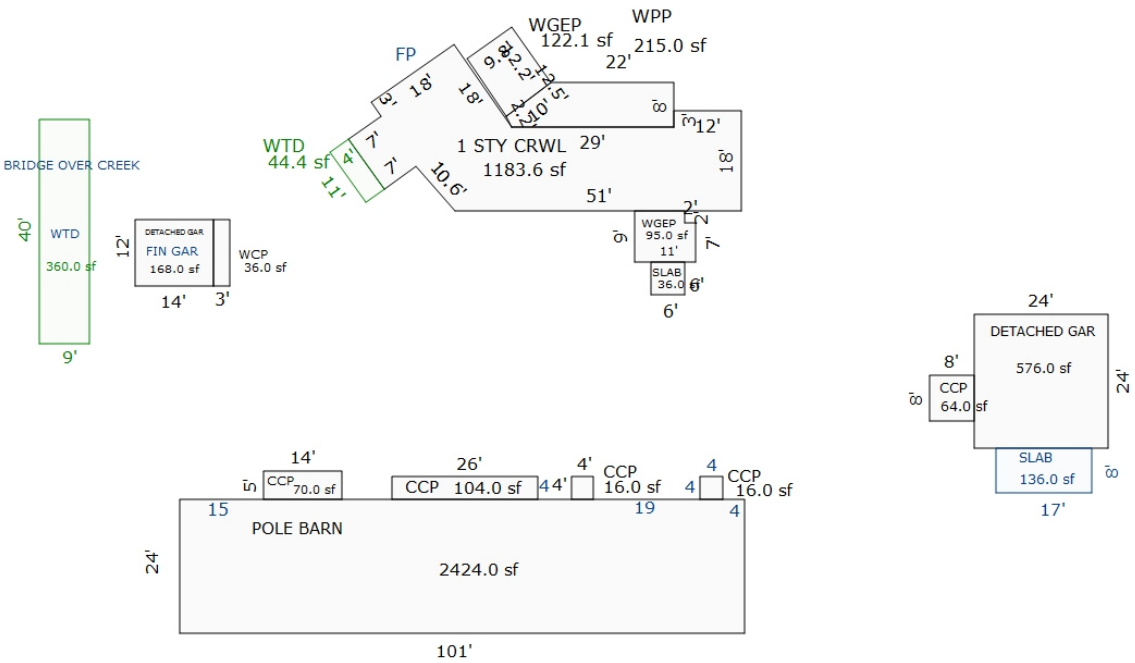

Sketch by Apex Sketch

*** Information herein deemed reliable but not guaranteed***

Parcel Number: 2410-26-2303 Jurisdiction: GREENWOOD TWP County: WEXFORD Printed on 02/15/2024

Grantor	Grantee	Sale Price	Sale Date	Inst. Type	Terms of Sale	Liber & Page	Verified By	Prcnt. Trans.
JOHNSON, NORMAN D. & CONST	JOHNSON REVOCABLE TRUST	0	06/22/2007	QC	09-FAMILY	601/2721	DEED	0.0
STOCKMAN, ROBERT A.	JOHNSON, NORMAN D.	37,000	06/11/1988	LC	03-ARM'S LENGTH	311:427	DEED	0.0

Property Address

7602 N 33 RD

Owner's Name/Address

JOHNSON REVOCABLE TRUST
6731 BISON
WESTLAND MI 48185

Tax Description

SW 1/4 OF NW 1/4 EXC S 495 FT 25 A GW. SEC. 26 T24N R10W -MANTON- [[ASSESSED W/ 26-2301 '01

Comments/Influences

Class: RESIDENTIAL-IMPROV Zoning:

School: MANTON CONSOLIDATED SCHOOLS

P.R.E. 0%

:

2024 Est TCV 218,055 TCV/TFA: 162.73

Building Permit(s)	Date	Number	Status

X Improved | Vacant

	Public Improvements
	Dirt Road
X	Gravel Road
	Paved Road
	Storm Sewer
	Sidewalk
	Water
	Sewer
X	Electric
	Gas
	Curb
	Street Lights
	Standard Utilities
	Underground Utils.

	Topography of Site
	Level
X	Rolling
X	Low
	High
	Landscaped
	Swamp
X	Wooded
	Pond
	Waterfront
	Ravine
	Wetland
	Flood Plain
X	OPEN

Who	When	What
GLA	07/10/2019	INSPECTION
GLA	07/10/2019	INSPECTION
GLA	08/03/2014	INSPECTION

The Equalizer. Copyright (c) 1999 - 2009.
Licensed To: Township of Greenwood, County of Wexford, Michigan

Land Value Estimates for Land Table 4010.LAND VALUES

Description	Frontage	Depth	* Factors * Front	Depth	Rate	%Adj.	Reason	Value
	1512.00	0.00	1.0000	1.0000	0	100		0
ACREAGE			24.380 Acres		2,771	100		67,548
ROW			0.620 Acres		0	100		0

1512 Actual Front Feet, 25.00 Total Acres Total Est. Land Value = 67,548

Land Improvement Cost Estimates

Description	Rate	Size	% Good	Cash Value
D/W/P: 3.5 Concrete	5.82	912	52	2,760
Wood Frame	18.56	336	52	3,243
Total Estimated Land Improvements True Cash Value =				6,003

Year	Land Value	Building Value	Assessed Value	Board of Review	Tribunal/ Other	Taxable Value
2024	33,800	75,200	109,000			79,132C
2023	30,600	62,100	92,700			75,364C
2022	32,900	52,800	85,700			71,776C
2021	30,400	53,600	84,000			69,484C

*** Information herein deemed reliable but not guaranteed***

Building Type

X	Single Family
	Mobile Home
	Town Home
	Duplex
	A-Frame
X	Wood Frame

Building Style: PLAIN

Yr Built	Remodeled
0	0

Condition: Good

Room List

	Basement
	1st Floor
	2nd Floor
	Bedrooms

(1) Exterior

X	Wood/Shingle
	Aluminum/Vinyl
	Brick
X	Insulation

(2) Windows

	Many		Large
X	Avg.	X	Avg.
	Few		Small

	Wood Sash
	Metal Sash
X	Vinyl Sash
	Double Hung
	Horiz. Slide
	Casement
	Double Glass
	Patio Doors
X	Storms & Screens

(3) Roof

X	Gable		Gambrel
	Hip		Mansard
	Flat		Shed

X	Asphalt Shingle

Chimney:

(3) Roof (cont.)

	Eavestrough
X	Insulation
0	Front Overhang
0	Other Overhang

(4) Interior

X	Drywall		Plaster
	Paneled		Wood T&G

Trim & Decoration

	Ex	X	Ord		Min

Size of Closets

	Lg	X	Ord		Small

Doors:		Solid	X	H.C.	

(5) Floors

Kitchen:
Other: Linoleum
Other: Carpeted

(6) Ceilings

X	Drywall		

(7) Excavation

Basement: 0 S.F.
Crawl: 0 S.F.
Slab: 1340 S.F.
Height to Joists: 0.0

(8) Basement

	Conc. Block
	Poured Conc.
	Stone
	Treated Wood
	Concrete Floor

(9) Basement Finish

	Recreation SF
	Living SF
	Walkout Doors (B)
	No Floor SF
	Walkout Doors (A)

(10) Floor Support

Joists:
Unsupported Len:
Cntr.Sup:

(11) Heating/Cooling

X	Gas		Oil		Elec.
	Wood		Coal		Steam

	Forced Air w/o Ducts
X	Forced Air w/ Ducts
	Forced Hot Water
	Electric Baseboard
	Elec. Ceil. Radiant
	Radiant (in-floor)
	Electric Wall Heat
	Space Heater
	Wall/Floor Furnace
	Forced Heat & Cool
	Heat Pump
	No Heating/Cooling

	Central Air
	Wood Furnace

(12) Electric

150	Amps Service

No./Qual. of Fixtures

	Ex.	X	Ord.		Min

No. of Elec. Outlets

	Many	X	Ave.		Few

(13) Plumbing

	Average Fixture(s)
1	3 Fixture Bath
	2 Fixture Bath
	Softener, Auto
	Softener, Manual
	Solar Water Heat
	No Plumbing
	Extra Toilet
	Extra Sink
	Separate Shower
	Ceramic Tile Floor
	Ceramic Tile Wains
	Ceramic Tub Alcove
	Vent Fan

(14) Water/Sewer

	Public Water
	Public Sewer
1	Water Well
1	1000 Gal Septic
	2000 Gal Septic

Lump Sum Items:

(15) Built-ins

	Appliance Allow.
	Cook Top
	Dishwasher
	Garbage Disposal
	Bath Heater
	Vent Fan
	Hot Tub
	Unvented Hood
	Vented Hood
	Intercom
	Jacuzzi Tub
	Jacuzzi repl.Tub
	Oven
	Microwave
	Standard Range
	Self Clean Range
	Sauna
	Trash Compactor
	Central Vacuum
	Security System

(15) Fireplaces

	Interior 1 Story
	Interior 2 Story
	2nd/Same Stack
	Two Sided
1	Exterior 1 Story
	Exterior 2 Story
	Prefab 1 Story
	Prefab 2 Story
	Heat Circulator
	Raised Hearth
	Wood Stove
	Direct-Vented Gas

Class: D
Effec. Age: 48
Floor Area: 1,340
Total Base New : 214,258 E.C.F.
Total Depr Cost: 111,414 X 1.297
Estimated T.C.V: 144,504

(16) Porches/Decks

Area	Type
42	Treated Wood
444	Treated Wood
36	Treated Wood

(17) Garage

Year Built:
Car Capacity:
Class: CD
Exterior: Siding
Brick Ven.: 0
Stone Ven.: 0
Common Wall: Detache
Foundation: 42 Inch
Finished ?:
Auto. Doors: 0
Mech. Doors: 0
Area: 1320
% Good: 0
Storage Area: 990
No Conc. Floor: 0

Bsmnt Garage:

Carport Area:
Roof:

Cost Est. for Res. Bldg: 1 Single Family PLAIN Cls D Blt 0
(11) Heating System: Forced Air w/ Ducts
Ground Area = 1340 SF Floor Area = 1340 SF.
Phy/Ab.Phy/Func/Econ/Comb. % Good=52/100/100/100/52
Building Areas

Stories	Exterior	Foundation	Size	Cost New	Depr. Cost
1 Story	Siding	Slab	1,340		
			Total:	134,903	70,150
Other Additions/Adjustments					
Water/Sewer					
1000 Gal Septic			1	4,293	2,232
Water Well, 100 Feet			1	5,545	2,883
Deck					
Treated Wood			42	1,580	822
Treated Wood			444	6,709	3,489
Treated Wood			36	1,457	758
Garages					
Class: CD Exterior: Siding Foundation: 42 Inch (Unfinished)					
Storage Over Garage			990	12,197	6,342
Base Cost			1320	42,570	22,136
Fireplaces					
Exterior 1 Story			1	5,004	2,602
			Totals:	214,258	111,414

Notes:
ECF (RESIDENTIAL) 1.297 => TCV: 144,504

*** Information herein deemed reliable but not guaranteed***

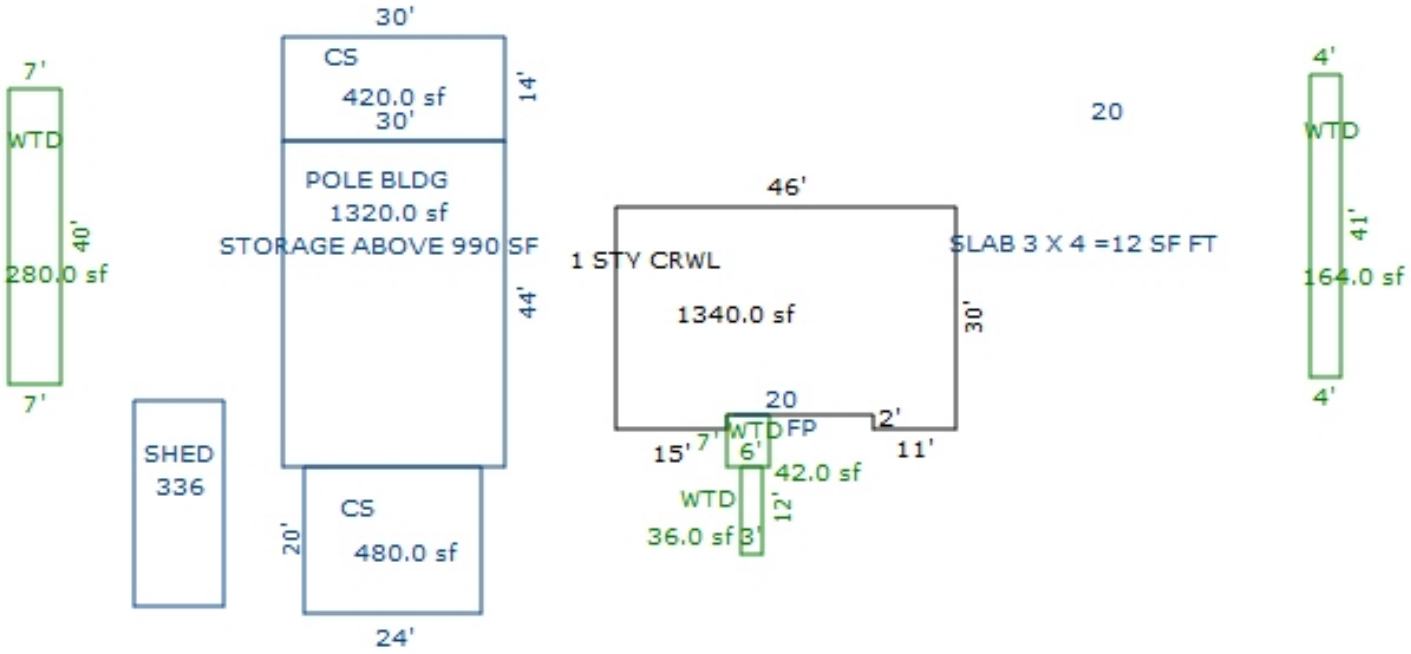

Sketch by Apex Sketch

*** Information herein deemed reliable but not guaranteed***

Parcel Number: 2410-26-3101 Jurisdiction: GREENWOOD TWP County: WEXFORD Printed on 02/15/2024

Grantor	Grantee	Sale Price	Sale Date	Inst. Type	Terms of Sale	Liber & Page	Verified By	Prcnt. Trans.
CULVER, GARY L	CULVER JONATHAN & CHRISTOI	0	02/06/2023	QC	15-LADY BIRD	696/24	DEED	0.0
CULVER, LINA M		0	09/05/2012	OTH	21-NOT USED/OTHER	651/2616	DEED	100.0
CULVER, LINA M LE	CULVER, LINA M LE ETAL	0	04/13/2011	QC	18-LIFE ESTATE	638/2159	DEED	0.0
CULVER, LINA M	CULVER, LINA M LE & JOANN	0	10/07/2010	QC	18-LIFE ESTATE	633/2329	DEED	0.0

Property Address

Owner's Name/Address

CULVER, GARY L
1829 CAMINO CARLOS REY
NORTH LAS VEGAS NV 89031

Tax Description

E 1/2 OF SW 1/4 80 A. GW. SEC. 26 T24N R10W -MANTON-

Comments/Influences

Class: RESIDENTIAL-VACANT Zoning:

School: MANTON CONSOLIDATED SCHOOLS

P.R.E. 100% 04/25/2012 Qual. Ag.

:

2024 Est TCV 201,024

Building Permit(s)	Date	Number	Status

	Improved	X	Vacant

	Public Improvements
X	Dirt Road
	Gravel Road
	Paved Road
	Storm Sewer
	Sidewalk
	Water
	Sewer
X	Electric
	Gas
	Curb
	Street Lights
	Standard Utilities
	Underground Utils.

	Topography of Site
	Level
X	Rolling
	Low
X	High
	Landscaped
	Swamp
X	Wooded
	Pond
	Waterfront
	Ravine
	Wetland
	Flood Plain
X	OPEN/PINES

Who	When	What
GLA	07/10/2019	INSPECTION
GLA	07/10/2019	INSPECTION

Land Value Estimates for Land Table 4010.LAND VALUES

Description	Frontage	Depth	* Factors * Front	Depth	Rate	%Adj.	Reason	Value
ACREAGE			79.010 Acres		2,544	100		201,024
ROW			0.990 Acres		0	100		0
			80.00 Total Acres		Total Est. Land Value =			201,024

Year	Land Value	Building Value	Assessed Value	Board of Review	Tribunal/ Other	Taxable Value
2024	100,500	0	100,500			67,233C
2023	85,100	0	85,100			64,032C
2022	67,200	0	67,200			60,983C
2021	61,400	0	61,400			59,035C

The Equalizer. Copyright (c) 1999 - 2009. Licensed To: Township of Greenwood, County of Wexford, Michigan

*** Information herein deemed reliable but not guaranteed***

Parcel Number: 2410-26-3201 Jurisdiction: GREENWOOD TWP County: WEXFORD Printed on 02/15/2024

Grantor	Grantee	Sale Price	Sale Date	Inst. Type	Terms of Sale	Liber & Page	Verified By	Prcnt. Trans.
JENSEN, RICK W	JENSEN, RICK W & JENNIFER	0	03/31/2023	QC	21-NOT USED/OTHER	694/2748	DEED	0.0
JENSEN, JACKIE E & TONI J	JENSEN, RICK W	1	02/08/2023	QC	09-FAMILY	694/2747	DEED	0.0
JENSEN, JACKIE E & TONI J	JENSEN, JACKIE E & TONI J	0	08/16/2010	QC	09-FAMILY	632/753	DEED	10.0
MINOR, NORMA D.	JENSEN, JACKIE E.	20,000	09/16/1987	LC	03-ARM'S LENGTH	308:172	DEED	0.0

Property Address

7276 N 33 RD

Owner's Name/Address

JENSEN, RICK W & JENNIFER R
7276 N 33 RD
MANTON MI 49663

Tax Description

S 1/2 OF S 1/2 OF NW 1/4 OF SW 1/4 --10 A M/L-- GW. SEC. 26 T24N R10W -MANTON-

Comments/Influences

The Equalizer. Copyright (c) 1999 - 2009. Licensed To: Township of Greenwood, County of Wexford, Michigan

Class: RESIDENTIAL-IMPROV Zoning:

School: MANTON CONSOLIDATED SCHOOLS

P.R.E. 100% / /

:

2024 Est TCV 245,594 TCV/TFA: 156.63

Building Permit(s)	Date	Number	Status
Res. Single Family	11/04/2009	PM09-10734	
Res. Single Family	10/28/2009	PB09-0260	
Res. Single Family	10/20/2009	PE09-18594	
Plumbing	10/06/2009	PP09-4886	

X	Improved		Vacant

	Public Improvements
	Dirt Road
X	Gravel Road
	Paved Road
	Storm Sewer
	Sidewalk
	Water
	Sewer
X	Electric
	Gas
	Curb
	Street Lights
	Standard Utilities
	Underground Utils.

	Topography of Site
	Level
X	Rolling
X	Low
	High
	Landscaped
	Swamp
X	Wooded
	Pond
	Waterfront
	Ravine
	Wetland
	Flood Plain
X	OPEN

Who	When	What
GLA	07/10/2019	INSPECTION
GLA	07/10/2019	INSPECTION
GLA	08/03/2014	INSPECTION

Land Value Estimates for Land Table 4010.LAND VALUES

Description	Frontage	Depth	* Factors * Front	Depth	Rate	%Adj.	Reason	Value
	1320.00	0.00	1.0000	1.0000	0	100		0
ACREAGE			9.760 Acres		4,662	100		45,505
ROW			0.240 Acres		0	100		0

1320 Actual Front Feet, 10.00 Total Acres Total Est. Land Value = 45,505

Land Improvement Cost Estimates

Description	Rate	Size	% Good	Cash Value
D/W/P: 3.5 Concrete	6.63	1506	80	7,988
Wood Frame	27.19	144	46	1,801
Total Estimated Land Improvements True Cash Value =				9,789

Year	Land Value	Building Value	Assessed Value	Board of Review	Tribunal/ Other	Taxable Value
2024	22,800	100,000	122,800			73,619C
2023	12,900	82,200	95,100			70,114C
2022	17,200	69,500	86,700			66,776C
2021	17,300	70,000	87,300			64,643C

*** Information herein deemed reliable but not guaranteed***

Building Type

X	Single Family
	Mobile Home
	Town Home
	Duplex
	A-Frame
X	Wood Frame

Building Style: PLAIN

Yr Built	Remodeled
2009	0

Condition: Good

Room List

	Basement
	1st Floor
	2nd Floor
	Bedrooms

(1) Exterior

X	Wood/Shingle
	Aluminum/Vinyl
	Brick
X	Insulation

(2) Windows

X	Many Avg. Few	X	Large Avg. Small

	Wood Sash
	Metal Sash
X	Vinyl Sash
	Double Hung
	Horiz. Slide
	Casement
	Double Glass
	Patio Doors
X	Storms & Screens

(3) Roof

X	Gable		Gambrel
	Hip		Mansard
	Flat		Shed

X	Asphalt Shingle

Chimney:

(3) Roof (cont.)

	Eavestrough
X	Insulation
0	Front Overhang
0	Other Overhang

(4) Interior

X	Drywall		Plaster
	Paneled		Wood T&G

Trim & Decoration

	Ex	X	Ord		Min

Size of Closets

	Lg	X	Ord		Small

Doors:		Solid	X	H.C.	

(5) Floors

Kitchen:
Other: Linoleum
Other: Carpeted

(6) Ceilings

X	Drywall

(7) Excavation

Basement: 0 S.F.
Crawl: 0 S.F.
Slab: 1568 S.F.
Height to Joists: 0.0

(8) Basement

	Conc. Block
	Poured Conc.
	Stone
	Treated Wood
	Concrete Floor

(9) Basement Finish

	Recreation SF
	Living SF
	Walkout Doors (B)
	No Floor SF
	Walkout Doors (A)

(10) Floor Support

Joists:
Unsupported Len:
Cntr.Sup:

(11) Heating/Cooling

X	Gas		Oil		Elec.
	Wood		Coal		Steam

	Forced Air w/o Ducts
X	Forced Air w/ Ducts
	Forced Hot Water
	Electric Baseboard
	Elec. Ceil. Radiant
	Radiant (in-floor)
	Electric Wall Heat
	Space Heater
	Wall/Floor Furnace
	Forced Heat & Cool
	Heat Pump
	No Heating/Cooling

	Central Air
	Wood Furnace

(12) Electric

150	Amps Service

No./Qual. of Fixtures

	Ex.	X	Ord.		Min

No. of Elec. Outlets

	Many	X	Ave.		Few

(13) Plumbing

2	Average Fixture(s)
	3 Fixture Bath
	2 Fixture Bath
	Softener, Auto
	Softener, Manual
	Solar Water Heat
	No Plumbing
	Extra Toilet
	Extra Sink
	Separate Shower
	Ceramic Tile Floor
	Ceramic Tile Wains
	Ceramic Tub Alcove
	Vent Fan

(14) Water/Sewer

	Public Water
	Public Sewer
1	Water Well
1	1000 Gal Septic
	2000 Gal Septic

Lump Sum Items:

(15) Built-ins

	Appliance Allow.
	Cook Top
	Dishwasher
	Garbage Disposal
	Bath Heater
	Vent Fan
	Hot Tub
	Unvented Hood
	Vented Hood
	Intercom
	Jacuzzi Tub
	Jacuzzi repl.Tub
	Oven
	Microwave
	Standard Range
	Self Clean Range
	Sauna
	Trash Compactor
	Central Vacuum
	Security System

(15) Fireplaces

	Interior 1 Story
	Interior 2 Story
	2nd/Same Stack
	Two Sided
	Exterior 1 Story
	Exterior 2 Story
	Prefab 1 Story
	Prefab 2 Story
	Heat Circulator
	Raised Hearth
	Wood Stove
	Direct-Vented Gas

Class: CD
Effec. Age: 20
Floor Area: 1,568
Total Base New : 183,401 E.C.F.
Total Depr Cost: 146,723 X 1.297
Estimated T.C.V: 190,300

(16) Porches/Decks

Area	Type

(17) Garage

Year Built:
Car Capacity:
Class:
Exterior:
Brick Ven.:
Stone Ven.:
Common Wall:
Foundation:
Finished ?:
Auto. Doors:
Mech. Doors:
Area:
% Good:
Storage Area:
No Conc. Floor:

Bsmnt Garage:

Carport Area:
Roof:

Cost Est. for Res. Bldg: 1 Single Family PLAIN Cls CD Blt 2009
(11) Heating System: Forced Air w/ Ducts
Ground Area = 1568 SF Floor Area = 1568 SF.
Phy/Ab.Phy/Func/Econ/Comb. % Good=80/100/100/100/80
Building Areas

Stories	Exterior	Foundation	Size	Cost New	Depr. Cost
1 Story	Siding	Slab	1,568		
			Total:	169,252	135,403
Other Additions/Adjustments					
Plumbing					
3 Fixture Bath			1	3,887	3,110
Water/Sewer					
1000 Gal Septic			1	4,582	3,666
Water Well, 100 Feet			1	5,680	4,544
			Totals:	183,401	146,723

Notes:

ECF (RESIDENTIAL) 1.297 => TCV: 190,300

*** Information herein deemed reliable but not guaranteed***

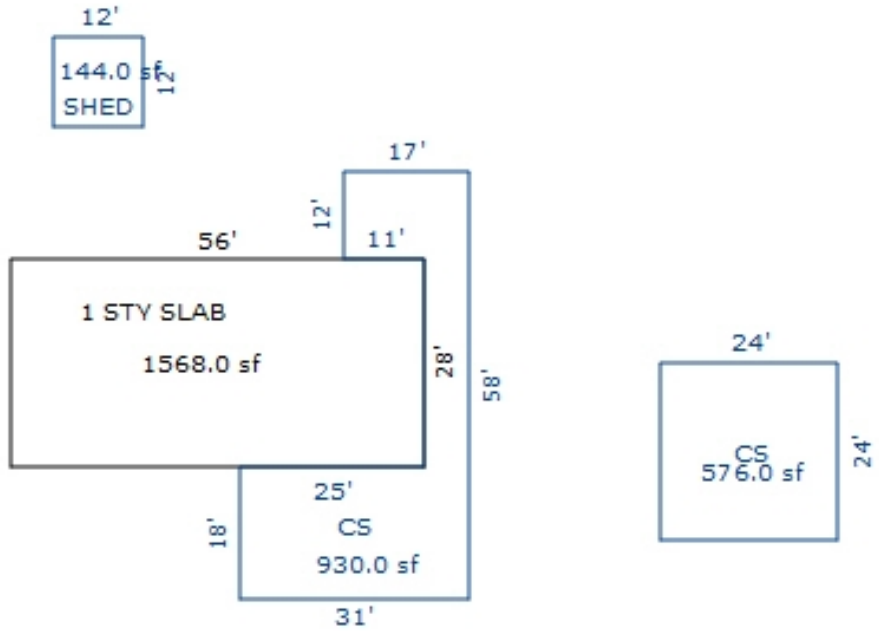

Sketch by Apex Sketch

*** Information herein deemed reliable but not guaranteed***

Parcel Number: 2410-26-3202 Jurisdiction: GREENWOOD TWP County: WEXFORD Printed on 02/15/2024

Grantor	Grantee	Sale Price	Sale Date	Inst. Type	Terms of Sale	Liber & Page	Verified By	Prcnt. Trans.

Property Address	Class: RESIDENTIAL-VACANT	Zoning:	Building Permit(s)	Date	Number	Status
	School: MANTON CONSOLIDATED SCHOOLS					
Owner's Name/Address	P.R.E. 100% / /					
	:					
JENSEN, JACKIE E. & TONI J. 7405 N 33 RD MANTON MI 49663	2024 Est TCV 45,505					

	Improved	X	Vacant

	Public Improvements
X	Dirt Road
X	Gravel Road
	Paved Road
	Storm Sewer
	Sidewalk
	Water
	Sewer
X	Electric
	Gas
	Curb
	Street Lights
	Standard Utilities
	Underground Utils.

	Topography of Site
	Level
X	Rolling
X	Low
	High
	Landscaped
X	Swamp
X	Wooded
	Pond
	Waterfront
	Ravine
	Wetland
	Flood Plain
X	OPEN

Who	When	What
GLA	07/10/2019	INSPECTION
GLA	07/10/2019	INSPECTION

Land Value Estimates for Land Table 4010.LAND VALUES

Description	Frontage	Depth	* Factors * Front	Depth	Rate	%Adj.	Reason	Value
	330.00	0.00	1.0000	1.0000	0	100		0
ACREAGE			9.760 Acres		4,662	100		45,505
ROW			0.240 Acres		0	100		0
330 Actual Front Feet, 10.00 Total Acres							Total Est. Land Value =	45,505

Year	Land Value	Building Value	Assessed Value	Board of Review	Tribunal/ Other	Taxable Value
2024	22,800	0	22,800			7,733C
2023	12,900	0	12,900			7,365C
2022	13,200	0	13,200			7,015C
2021	13,300	0	13,300			6,791C

Tax Description

N 1/2 OF S 1/2 OF NW 1/4 OF SW 1/4 --10 A M/L-- GW. SEC. 26 T24N R10W -MANTON- [[ASSESSED W/ 26-3201 '03

Comments/Influences

The Equalizer. Copyright (c) 1999 - 2009. Licensed To: Township of Greenwood, County of Wexford, Michigan

*** Information herein deemed reliable but not guaranteed***

Parcel Number: 2410-26-3203 Jurisdiction: GREENWOOD TWP County: WEXFORD Printed on 02/15/2024

Grantor	Grantee	Sale Price	Sale Date	Inst. Type	Terms of Sale	Liber & Page	Verified By	Prcnt. Trans.
JENSEN, JACKIE E. & TONI J	JENSEN, JACKIE D	0	08/27/2009	WD	09-FAMILY	625/1370	DEED	100.0

Property Address

Owner's Name/Address

JENSEN, JACKIE D
7402 N 33 RD
MANTON MI 49663

Tax Description

S 1/2 OF N 1/2 OF NW 1/4 OF SW 1/4 --10 A M/L-- GW. SEC. 26 T24N R10W -MANTON- [[ASSESSED W/ 26-3201 '03

Comments/Influences

The Equalizer. Copyright (c) 1999 - 2009. Licensed To: Township of Greenwood, County of Wexford, Michigan

Class: RESIDENTIAL-IMPROV Zoning:

School: MANTON CONSOLIDATED SCHOOLS

P.R.E. 100% / /

:

2024 Est TCV 325,379 TCV/TFA: 193.68

Building Permit(s)	Date	Number	Status
Res. Single Family	12/10/2009	PM09-10781	
Mechanical	11/24/2009	PM09-10764	
Res. Single Family	11/17/2009	PE09-18624	
Res. Single Family	11/17/2009	PP09-4910	

X Improved | Vacant

	Public Improvements
	Dirt Road
X	Gravel Road
X	Paved Road
	Storm Sewer
	Sidewalk
	Water
	Sewer
X	Electric
	Gas
	Curb
	Street Lights
	Standard Utilities
	Underground Utils.

	Topography of Site
	Level
X	Rolling
X	Low
X	High
	Landscaped
	Swamp
X	Wooded
	Pond
	Waterfront
	Ravine
	Wetland
	Flood Plain
X	OPEN/PINES

Who	When	What
GLA	07/10/2019	INSPECTION
GLA	07/10/2019	INSPECTION

Land Value Estimates for Land Table 4010.LAND VALUES

Description	Frontage	Depth	* Factors * Front	Depth	Rate	%Adj.	Reason	Value
	330.00	0.00	1.0000	1.0000	0	100		0
ACREAGE			9.750 Acres		4,664	100		45,470
ROW			0.250 Acres		0	100		0

330 Actual Front Feet, 10.00 Total Acres Total Est. Land Value = 45,470

Year	Land Value	Building Value	Assessed Value	Board of Review	Tribunal/ Other	Taxable Value
2024	22,700	140,000	162,700			93,048C
2023	12,900	114,000	126,900			88,618C
2022	13,200	96,000	109,200			84,399C
2021	13,300	96,900	110,200			81,703C

*** Information herein deemed reliable but not guaranteed***

Building Type

X	Single Family
	Mobile Home
	Town Home
	Duplex
	A-Frame
X	Wood Frame

Building Style: PLAIN

Yr Built	Remodeled
2009	0

Condition: Good

Room List

	Basement
	1st Floor
	2nd Floor
	Bedrooms

(1) Exterior

	Wood/Shingle
X	Aluminum/Vinyl
	Brick
X	Insulation

(2) Windows

X	Many Avg. Few	X	Large Avg. Small

	Wood Sash
	Metal Sash
X	Vinyl Sash
	Double Hung
	Horiz. Slide
	Casement
	Double Glass
	Patio Doors
X	Storms & Screens

(3) Roof

X	Gable		Gambrel
	Hip		Mansard
	Flat		Shed

X	Asphalt Shingle

Chimney:

(3) Roof (cont.)

	Eavestrough
X	Insulation
0	Front Overhang
0	Other Overhang

(4) Interior

X	Drywall		Plaster
	Paneled		Wood T&G

Trim & Decoration

	Ex	X	Ord		Min

Size of Closets

	Lg	X	Ord		Small

Doors:		Solid	X	H.C.	

(5) Floors

Kitchen:
Other: Linoleum
Other: Carpeted

(6) Ceilings

X	Drywall

(7) Excavation

Basement: 1680 S.F.
Crawl: 0 S.F.
Slab: 0 S.F.
Height to Joists: 0.0

(8) Basement

	Conc. Block
	Poured Conc.
	Stone
	Treated Wood
	Concrete Floor

(9) Basement Finish

	Recreation	SF
	Living	SF
	Walkout Doors (B)	
	No Floor	SF
1	Walkout Doors (A)	

(10) Floor Support

Joists:
Unsupported Len:
Cntr.Sup:

(11) Heating/Cooling

X	Gas		Oil		Elec.
	Wood		Coal		Steam

	Forced Air w/o Ducts
X	Forced Air w/ Ducts
	Forced Hot Water
	Electric Baseboard
	Elec. Ceil. Radiant
	Radiant (in-floor)
	Electric Wall Heat
	Space Heater
	Wall/Floor Furnace
	Forced Heat & Cool
	Heat Pump
	No Heating/Cooling

	Central Air
	Wood Furnace

(12) Electric

150	Amps Service

No./Qual. of Fixtures

	Ex.	X	Ord.		Min

No. of Elec. Outlets

	Many	X	Ave.		Few

(13) Plumbing

	Average Fixture(s)
1	3 Fixture Bath
	2 Fixture Bath
	Softener, Auto
	Softener, Manual
	Solar Water Heat
	No Plumbing
	Extra Toilet
	Extra Sink
	Separate Shower
	Ceramic Tile Floor
	Ceramic Tile Wains
	Ceramic Tub Alcove
	Vent Fan

(14) Water/Sewer

	Public Water
	Public Sewer
1	Water Well
1	1000 Gal Septic
	2000 Gal Septic

Lump Sum Items:

(15) Built-ins

	Appliance Allow.
	Cook Top
	Dishwasher
	Garbage Disposal
	Bath Heater
	Vent Fan
	Hot Tub
	Unvented Hood
	Vented Hood
	Intercom
	Jacuzzi Tub
	Jacuzzi repl.Tub
	Oven
	Microwave
	Standard Range
	Self Clean Range
	Sauna
	Trash Compactor
	Central Vacuum
	Security System

(15) Fireplaces

	Interior 1 Story
	Interior 2 Story
	2nd/Same Stack
	Two Sided
	Exterior 1 Story
	Exterior 2 Story
	Prefab 1 Story
	Prefab 2 Story
	Heat Circulator
	Raised Hearth
	Wood Stove
	Direct-Vented Gas

Class: C
Effec. Age: 15
Floor Area: 1,680
Total Base New : 253,898 E.C.F.
Total Depr Cost: 215,813 X 1.297
Estimated T.C.V: 279,909

(16) Porches/Decks

Area	Type
48	WPP

(17) Garage

Year Built:
Car Capacity:
Class:
Exterior:
Brick Ven.:
Stone Ven.:
Common Wall:
Foundation:
Finished ?:
Auto. Doors:
Mech. Doors:
Area:
% Good:
Storage Area:
No Conc. Floor:

Bsmnt Garage:

Carport Area:
Roof:

Cost Est. for Res. Bldg: 1 Single Family PLAIN Cls C Blt 2009
(11) Heating System: Forced Air w/ Ducts
Ground Area = 1680 SF Floor Area = 1680 SF.
Phy/Ab.Phy/Func/Econ/Comb. % Good=85/100/100/100/85
Building Areas

Stories	Exterior	Foundation	Size	Cost New	Depr. Cost
1 Story	Siding	Basement	1,680		
			Total:	239,224	203,339
Other Additions/Adjustments					
Basement, Outside Entrance, Above Grade			1	1,883	1,601
Water/Sewer					
1000 Gal Septic			1	4,899	4,164
Water Well, 100 Feet			1	5,849	4,972
Porches					
WPP			48	2,043	1,737
			Totals:	253,898	215,813

Notes:
ECF (RESIDENTIAL) 1.297 => TCV: 279,909

*** Information herein deemed reliable but not guaranteed***

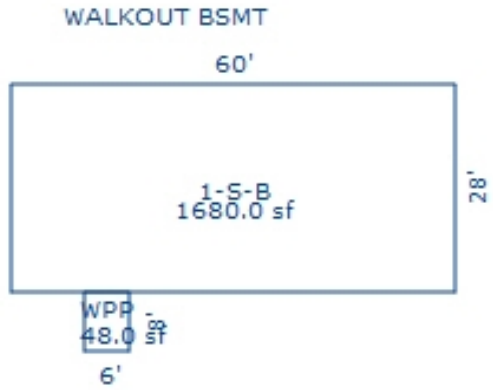

Sketch by Apex Sketch

*** Information herein deemed reliable but not guaranteed***

Parcel Number: 2410-26-3204 Jurisdiction: GREENWOOD TWP County: WEXFORD Printed on 02/15/2024

Grantor	Grantee	Sale Price	Sale Date	Inst. Type	Terms of Sale	Liber & Page	Verified By	Prcnt. Trans.

Property Address

Owner's Name/Address

JENSEN, JACKIE E.
& TONI J.
7405 N 33 RD
MANTON MI 49663

Tax Description

N 1/2 OF N 1/2 OF NW 1/4 OF SW 1/4 --10 A M/L-- GW. SEC. 26 T24N R10W -MANTON- [[ASSESSED W/ 26-3201 '03

Comments/Influences

Default Comments

Class: RESIDENTIAL-VACANT Zoning:

School: MANTON CONSOLIDATED SCHOOLS

P.R.E. 100% / /

:

2024 Est TCV 45,505

Building Permit(s)	Date	Number	Status

	Improved	X	Vacant

	Public Improvements
X	Dirt Road
X	Gravel Road
	Paved Road
	Storm Sewer
	Sidewalk
	Water
	Sewer
X	Electric
	Gas
	Curb
	Street Lights
	Standard Utilities
	Underground Utils.

	Topography of Site
	Level
X	Rolling
	Low
	High
	Landscaped
	Swamp
X	Wooded
	Pond
	Waterfront
	Ravine
	Wetland
	Flood Plain
X	OPEN

Who	When	What
GLA	07/10/2019	INSPECTION
GLA	07/10/2019	INSPECTION
LM	10/21/2010	INSPECTED

Land Value Estimates for Land Table 4010.LAND VALUES

Description	Frontage	Depth	* Factors * Front	Depth	Rate	%Adj.	Reason	Value
	330.00	0.00	1.0000	1.0000	0	100		0
ACREAGE			9.760 Acres		4,662	100		45,505
ROW			0.240 Acres		0	100		0

330 Actual Front Feet, 10.00 Total Acres Total Est. Land Value = 45,505

Year	Land Value	Building Value	Assessed Value	Board of Review	Tribunal/ Other	Taxable Value
2024	22,800	0	22,800			7,733C
2023	12,900	0	12,900			7,365C
2022	13,200	0	13,200			7,015C
2021	13,300	0	13,300			6,791C

The Equalizer. Copyright (c) 1999 - 2009.
Licensed To: Township of Greenwood, County of Wexford, Michigan

*** Information herein deemed reliable but not guaranteed***

Parcel Number: 2410-26-3301 Jurisdiction: GREENWOOD TWP County: WEXFORD Printed on 02/15/2024

Grantor	Grantee	Sale Price	Sale Date	Inst. Type	Terms of Sale	Liber & Page	Verified By	Prcnt. Trans.
EMERY, JOSEPH L. JR.	TRUAX, SCOTT	25,000	10/11/2022	QC	22-OUTLIER	694/122	DEED	100.0

Property Address

Owner's Name/Address

TRUAX, SCOTT
7100 N 33 RD
MANTON MI 49663

Tax Description

N 545 FT OF SW 1/4 OF SW 1/4 16.52 A. M/L GW. SEC. 26 T24N R10W -MANTON-

Comments/Influences

The Equalizer. Copyright (c) 1999 - 2009. Licensed To: Township of Greenwood, County of Wexford, Michigan

Class: RESIDENTIAL-IMPROV Zoning:

School: MANTON CONSOLIDATED SCHOOLS

P.R.E. 0%

:

2024 Est TCV 77,887 TCV/TFA: 173.85

Building Permit(s)	Date	Number	Status

X	Improved		Vacant

	Public Improvements
	Dirt Road
X	Gravel Road
X	Paved Road
	Storm Sewer
	Sidewalk
	Water
	Sewer
X	Electric
	Gas
	Curb
	Street Lights
	Standard Utilities
	Underground Utils.

	Topography of Site
	Level
X	Rolling
	Low
	High
	Landscaped
X	Swamp
X	Wooded
	Pond
	Waterfront
	Ravine
	Wetland
	Flood Plain
X	OPEN

Who	When	What
GLA	07/10/2019	INSPECTION
GLA	07/10/2019	INSPECTION

Land Value Estimates for Land Table 4010.LAND VALUES

Description	Frontage	Depth	* Factors * Front	Depth	Rate	%Adj.	Reason	Value
	445.00	0.00	1.0000	1.0000	0	100		0
ACREAGE			16.107 Acres		3,200	100		51,542
ROW			0.413 Acres		0	100		0
445 Actual Front Feet, 16.52 Total Acres							Total Est. Land Value =	51,542

Year	Land Value	Building Value	Assessed Value	Board of Review	Tribunal/ Other	Taxable Value
2024	25,800	13,100	38,900			33,390C
2023	20,900	10,900	31,800			31,800S
2022	20,100	9,200	29,300			20,784C
2021	20,200	9,400	29,600			20,121C

*** Information herein deemed reliable but not guaranteed***

Building Type

X	Single Family
	Mobile Home
	Town Home
	Duplex
	A-Frame
X	Wood Frame

Building Style: CABIN

Yr Built	Remodeled
0	0

Condition: Good

Room List

	Basement
	1st Floor
	2nd Floor
	Bedrooms

(1) Exterior

	Wood/Shingle
X	Aluminum/Vinyl
	Brick
X	Insulation

(2) Windows

	Many		Large
X	Avg.	X	Avg.
	Few		Small

	Wood Sash
	Metal Sash
X	Vinyl Sash
	Double Hung
	Horiz. Slide
	Casement
	Double Glass
	Patio Doors
X	Storms & Screens

(3) Roof

X	Gable		Gambrel
	Hip		Mansard
	Flat		Shed

X	Asphalt Shingle

Chimney:

(3) Roof (cont.)

	Eavestrough
X	Insulation
0	Front Overhang
0	Other Overhang

(4) Interior

X	Drywall		Plaster
	Paneled		Wood T&G

Trim & Decoration

	Ex	X	Ord		Min

Size of Closets

	Lg	X	Ord		Small

Doors:		Solid	X	H.C.	

(5) Floors

Kitchen:
Other: Linoleum
Other: Carpeted

(6) Ceilings

X	Drywall

(7) Excavation

Basement: 0 S.F.
Crawl: 0 S.F.
Slab: 0 S.F.
Height to Joists: 0.0

(8) Basement

	Conc. Block
	Poured Conc.
	Stone
	Treated Wood
	Concrete Floor

(9) Basement Finish

	Recreation SF
	Living SF
	Walkout Doors (B)
	No Floor SF
	Walkout Doors (A)

(10) Floor Support

Joists:
Unsupported Len:
Cntr.Sup:

(11) Heating/Cooling

X	Gas		Oil		Elec.
	Wood		Coal		Steam

	Forced Air w/o Ducts
	Forced Air w/ Ducts
	Forced Hot Water
	Electric Baseboard
	Elec. Ceil. Radiant
	Radiant (in-floor)
	Electric Wall Heat
X	Space Heater
	Wall/Floor Furnace
	Forced Heat & Cool
	Heat Pump
	No Heating/Cooling

	Central Air
	Wood Furnace

(12) Electric

150	Amps Service

No./Qual. of Fixtures

	Ex.	X	Ord.		Min

No. of Elec. Outlets

	Many	X	Ave.		Few

(13) Plumbing

1	Average Fixture(s)
	3 Fixture Bath
	2 Fixture Bath
	Softener, Auto
	Softener, Manual
	Solar Water Heat
	No Plumbing
	Extra Toilet
	Extra Sink
	Separate Shower
	Ceramic Tile Floor
	Ceramic Tile Wains
	Ceramic Tub Alcove
	Vent Fan

(14) Water/Sewer

	Public Water
	Public Sewer
	Water Well
	1000 Gal Septic
	2000 Gal Septic

Lump Sum Items:

(15) Built-ins

	Appliance Allow.
	Cook Top
	Dishwasher
	Garbage Disposal
	Bath Heater
	Vent Fan
	Hot Tub
	Unvented Hood
	Vented Hood
	Intercom
	Jacuzzi Tub
	Jacuzzi repl.Tub
	Oven
	Microwave
	Standard Range
	Self Clean Range
	Sauna
	Trash Compactor
	Central Vacuum
	Security System

(15) Fireplaces

	Interior 1 Story
	Interior 2 Story
	2nd/Same Stack
	Two Sided
	Exterior 1 Story
	Exterior 2 Story
	Prefab 1 Story
	Prefab 2 Story
	Heat Circulator
	Raised Hearth
	Wood Stove
	Direct-Vented Gas

Class: D
Effec. Age: 54
Floor Area: 448
Total Base New : 58,687 E.C.F.
Total Depr Cost: 20,312 X 1.297
Estimated T.C.V: 26,345

(16) Porches/Decks

Area	Type
80	WGEP (1 Story)
12	WPP

(17) Garage

Year Built:
Car Capacity:
Class:
Exterior:
Brick Ven.:
Stone Ven.:
Common Wall:
Foundation:
Finished ?:
Auto. Doors:
Mech. Doors:
Area:
% Good:
Storage Area:
No Conc. Floor:

Bsmnt Garage:

Carport Area:
Roof:

Cost Est. for Res. Bldg: 1 Single Family CABIN Cls D Blt 0
(11) Heating System: Space Heater
Ground Area = 448 SF Floor Area = 448 SF.
Phy/Ab.Phy/Func/Econ/Comb. % Good=46/100/75/100/34.5
Building Areas

Stories	Exterior	Foundation	Size	Cost New	Depr. Cost
1 Story	Siding	Piers	448		
			Total:	51,070	17,618
Other Additions/Adjustments					
Porches					
WGEP (1 Story)			80	7,048	2,432
WPP			12	569	262
			Totals:	58,687	20,312

Notes:
ECF (RESIDENTIAL) 1.297 => TCV: 26,345

*** Information herein deemed reliable but not guaranteed***

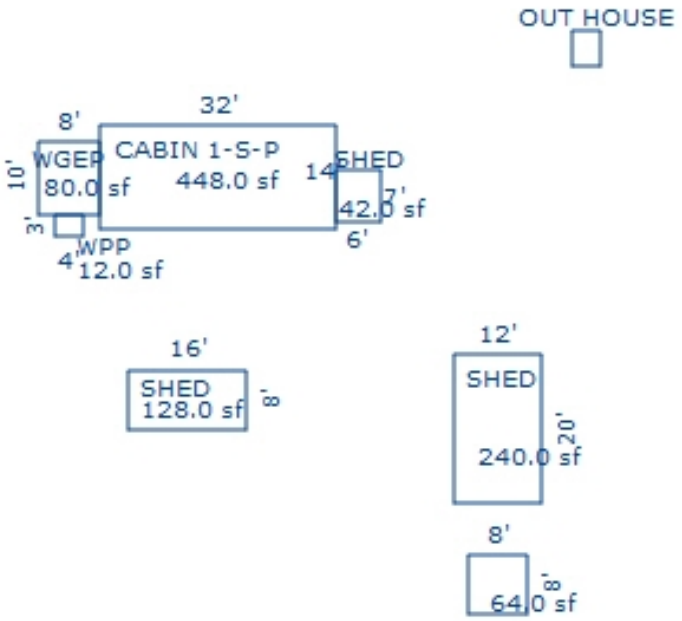

Sketch by Apex Sketch

*** Information herein deemed reliable but not guaranteed***

Parcel Number: 2410-26-3302-01 Jurisdiction: GREENWOOD TWP County: WEXFORD Printed on 02/15/2024

Grantor	Grantee	Sale Price	Sale Date	Inst. Type	Terms of Sale	Liber & Page	Verified By	Prcnt. Trans.
EMERY, BRUCE D	EMERY, BRUCE D LE	0	05/16/2016	QC	18-LIFE ESTATE	678/2222	DEED	0.0
EMERY, BRUCE D.	EMERY, BRUCE D LE	100	10/30/2015	OTH	18-LIFE ESTATE	676/940	DEED	0.0

Property Address

4201 E 12 RD

Owner's Name/Address

EMERY, BRUCE D LE
4201 E 12 RD
MANTON MI 49663

Tax Description

PAR COM 445 FT N OF SE COR OF SW 1/4 OF SW 1/4: TH W 1320 FT; N 330 FT; E 1320 FT; S 330 FT TO POB AND S 445 FT OF SW 1/4 OF SW 1/4, EXC THE W 500FT SUB TO EASMNT --18.37 A. M/L-- GW. SEC. 26 T24N R10W
COMBINED ON 10/03/2016 FROM 2410-26-3303-AND 3302

Comments/Influences

Default Comments

The Equalizer. Copyright (c) 1999 - 2009. Licensed To: Township of Greenwood, County of Wexford, Michigan

Class: RESIDENTIAL-IMPROV Zoning:
School: MANTON CONSOLIDATED SCHOOLS
P.R.E. 100% 01/29/2018
:
2024 Est TCV 206,486 TCV/TFA: 143.39

Building Permit(s)	Date	Number	Status

X Improved | Vacant

Public Improvements

Dirt Road
Gravel Road
Paved Road
Storm Sewer
Sidewalk
Water
Sewer
Electric
Gas
Curb
Street Lights
Standard Utilities
Underground Utils.

Topography of Site

Level
Rolling
Low
High
Landscaped
Swamp
Wooded
Pond
Waterfront
Ravine
Wetland
Flood Plain

Who	When	What
GLA	07/10/2019	INSPECTION
GLA	07/10/2019	INSPECTION

Land Value Estimates for Land Table 4010.LAND VALUES

Description	Frontage	Depth	* Factors * Front	Depth	Rate	%Adj.	Reason	Value
	165.00	0.00	1.0000	1.0000	0	100		0
ACREAGE			17.530 Acres		3,200	100		56,096
ROW			0.840 Acres		0	100		0

165 Actual Front Feet, 18.37 Total Acres Total Est. Land Value = 56,096

Land Improvement Cost Estimates

Description	Rate	Size	% Good	Cash Value
D/W/P: 3.5 Concrete	5.82	1087	51	3,226
Total Estimated Land Improvements True Cash Value =				3,226

Year	Land Value	Building Value	Assessed Value	Board of Review	Tribunal/ Other	Taxable Value
2024	28,000	75,200	103,200			65,459C
2023	22,800	61,900	84,700			62,342C
2022	20,300	52,700	73,000			59,374C
2021	19,700	53,400	73,100			57,478C

*** Information herein deemed reliable but not guaranteed***

Building Type

X	Single Family
	Mobile Home
	Town Home
	Duplex
	A-Frame
X	Wood Frame

Building Style: PLAIN

Yr Built	Remodeled
1980	0

Condition: Good

Room List

	Basement
	1st Floor
	2nd Floor
	Bedrooms

(1) Exterior

X	Wood/Shingle
	Aluminum/Vinyl
	Brick
X	Insulation

(2) Windows

	Many		Large
X	Avg.	X	Avg.
	Few		Small

	Wood Sash
	Metal Sash
X	Vinyl Sash
	Double Hung
	Horiz. Slide
	Casement
	Double Glass
	Patio Doors
X	Storms & Screens

(3) Roof

X	Gable		Gambrel
	Hip		Mansard
	Flat		Shed

X	Asphalt Shingle

Chimney:

(3) Roof (cont.)

	Eavestrough
X	Insulation
0	Front Overhang
0	Other Overhang

(4) Interior

X	Drywall		Plaster
	Paneled		Wood T&G

Trim & Decoration

	Ex	X	Ord		Min

Size of Closets

	Lg	X	Ord		Small

Doors:		Solid	X	H.C.	

(5) Floors

Kitchen:
Other: Linoleum
Other: Carpeted

(6) Ceilings

X	Drywall		

(7) Excavation

Basement: 1440 S.F.
Crawl: 0 S.F.
Slab: 0 S.F.
Height to Joists: 0.0

(8) Basement

	Conc. Block
	Poured Conc.
	Stone
	Treated Wood
	Concrete Floor

(9) Basement Finish

	Recreation SF
	Living SF
	Walkout Doors (B)
	No Floor SF
	Walkout Doors (A)

(10) Floor Support

Joists:
Unsupported Len:
Cntr.Sup:

(11) Heating/Cooling

X	Gas		Oil		Elec.
	Wood		Coal		Steam

	Forced Air w/o Ducts
X	Forced Air w/ Ducts
	Forced Hot Water
	Electric Baseboard
	Elec. Ceil. Radiant
	Radiant (in-floor)
	Electric Wall Heat
	Space Heater
	Wall/Floor Furnace
	Forced Heat & Cool
	Heat Pump
	No Heating/Cooling

	Central Air
	Wood Furnace

(12) Electric

150	Amps Service

No./Qual. of Fixtures

	Ex.	X	Ord.		Min

No. of Elec. Outlets

	Many	X	Ave.		Few

(13) Plumbing

	Average Fixture(s)
1	3 Fixture Bath
	2 Fixture Bath
	Softener, Auto
	Softener, Manual
	Solar Water Heat
	No Plumbing
	Extra Toilet
	Extra Sink
	Separate Shower
	Ceramic Tile Floor
	Ceramic Tile Wains
	Ceramic Tub Alcove
	Vent Fan

(14) Water/Sewer

	Public Water
	Public Sewer
1	Water Well
1	1000 Gal Septic
	2000 Gal Septic

Lump Sum Items:

(15) Built-ins

	Appliance Allow.
	Cook Top
	Dishwasher
	Garbage Disposal
	Bath Heater
	Vent Fan
	Hot Tub
	Unvented Hood
	Vented Hood
	Intercom
	Jacuzzi Tub
	Jacuzzi repl.Tub
	Oven
	Microwave
	Standard Range
	Self Clean Range
	Sauna
	Trash Compactor
	Central Vacuum
	Security System

(15) Fireplaces

	Interior 1 Story
	Interior 2 Story
	2nd/Same Stack
	Two Sided
	Exterior 1 Story
	Exterior 2 Story
	Prefab 1 Story
	Prefab 2 Story
	Heat Circulator
	Raised Hearth
	Wood Stove
	Direct-Vented Gas

Class: D
Effec. Age: 49
Floor Area: 1,440
Total Base New : 222,482 E.C.F.
Total Depr Cost: 113,465 X 1.297
Estimated T.C.V: 147,164

(16) Porches/Decks

Area	Type
1162	WPP
180	CCP (1 Story)

(17) Garage

Year Built:
Car Capacity:
Class: D
Exterior: Siding
Brick Ven.: 0
Stone Ven.: 0
Common Wall: Detache
Foundation: 18 Inch
Finished ?:
Auto. Doors: 0
Mech. Doors: 0
Area: 1120
% Good: 0
Storage Area: 0
No Conc. Floor: 0

Bsmnt Garage:

Carport Area:
Roof:

Cost Est. for Res. Bldg: 1 Single Family PLAIN Cls D Blt 1980
(11) Heating System: Forced Air w/ Ducts
Ground Area = 1440 SF Floor Area = 1440 SF.
Phy/Ab.Phy/Func/Econ/Comb. % Good=51/100/100/100/51
Building Areas

Stories	Exterior	Foundation	Size	Cost New	Depr. Cost
1 Story	Siding	Basement	1,440		
			Total:	165,604	84,458
Other Additions/Adjustments					
Water/Sewer					
1000 Gal Septic			1	4,293	2,189
Water Well, 100 Feet			1	5,545	2,828
Porches					
CCP (1 Story)			180	4,030	2,055
WPP			1162	14,304	7,295
Garages					
Class: D Exterior: Siding Foundation: 18 Inch (Unfinished)					
Base Cost			1120	28,706	14,640
			Totals:	222,482	113,465

Notes:
ECF (RESIDENTIAL) 1.297 => TCV: 147,164

*** Information herein deemed reliable but not guaranteed***

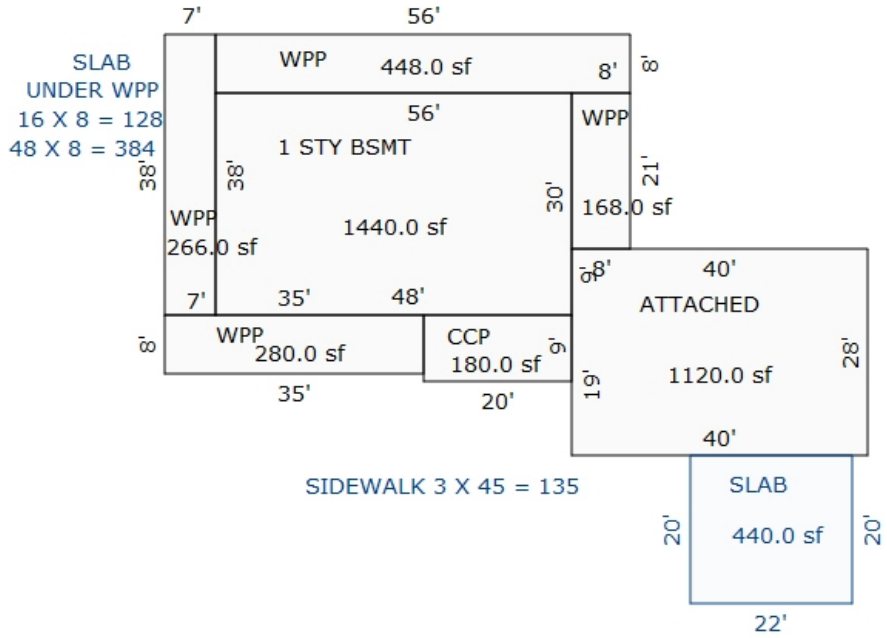

Sketch by Apex Sketch

*** Information herein deemed reliable but not guaranteed***

Parcel Number: 2410-26-3303-01 Jurisdiction: GREENWOOD TWP County: WEXFORD Printed on 02/15/2024

Grantor	Grantee	Sale Price	Sale Date	Inst. Type	Terms of Sale	Liber & Page	Verified By	Prcnt. Trans.
EMERY, JOSEPH L. JR.	TRAXLER, RONALD RAY	0	05/16/2016	QC	21-NOT USED/OTHER	6781/688	DEED	100.0

Property Address

4077 E 12 RD

Owner's Name/Address

TRAXLER, RONALD RAY
4077 E 12 RD
MANTON MI 49663

Tax Description

W 500FT OF S 445FT OF SW 1/4 OF SW 1/4 SUB TO EASMNT -- 5.11 A. M/L-- GW. SEC. 26 T24N RLOW -MANTON-
SPLIT ON 10/03/2016 FROM 2410-26-3303;

Comments/Influences

Split/Comb. on 01/23/2017 completed 01/23/2017 JAY ;
Parent Parcel(s): 2410-26-3303;
Child Parcel(s): 2410-26-3303-01, 2410-26-3303-02;

The Equalizer. Copyright (c) 1999 - 2009.
Licensed To: Township of Greenwood, County of Wexford, Michigan

Class: RESIDENTIAL-IMPROV Zoning:
School: MANTON CONSOLIDATED SCHOOLS
P.R.E. 0%
:
2024 Est TCV 62,676 TCV/TFA: 57.61

Building Permit(s)	Date	Number	Status
RESIDENTIAL - REMODEL	12/13/2004	PM8209	
RESIDENTIAL - NEW	11/22/2004	PB12565	
MOBILE HOME	11/22/2004	PE16599	

X Improved | Vacant

Public Improvements

- Dirt Road
- Gravel Road
- Paved Road
- Storm Sewer
- Sidewalk
- Water
- Sewer
- Electric
- Gas
- Curb
- Street Lights
- Standard Utilities
- Underground Utils.

Topography of Site

- Level
- Rolling
- Low
- High
- Landscaped
- Swamp
- Wooded
- Pond
- Waterfront
- Ravine
- Wetland
- Flood Plain

Who	When	What
GLA	07/10/2019	INSPECTION
GLA	07/10/2019	INSPECTION

Land Value Estimates for Land Table 4010.LAND VALUES

Description	Frontage	Depth	* Factors * Front	Depth	Rate	%Adj.	Reason	Value
ACREAGE			4.390 Acres		5,066	100		22,242
			0.720 Acres		0	100		0
			5.11 Total Acres		Total Est. Land Value =			22,242

Land Improvement Cost Estimates

Description	Rate	Size	% Good	Cash Value
D/W/P: 3.5 Concrete	6.63	330	31	678
Wood Frame	26.94	150	87	3,516
Wood Frame	25.17	192	87	4,205
Total Estimated Land Improvements True Cash Value =				8,399

Year	Land Value	Building Value	Assessed Value	Board of Review	Tribunal/ Other	Taxable Value
2024	11,100	20,200	31,300			18,553C
2023	9,900	16,900	26,800			17,670C
2022	7,200	14,300	21,500			16,829C
2021	8,400	12,600	21,000			16,292C

*** Information herein deemed reliable but not guaranteed***

Building Type

	Single Family
X	Mobile Home
	Town Home
	Duplex
	A-Frame

X	Wood Frame

Building Style: SWT/DWT

Yr Built	Remodeled
0	0

Condition: Good

Room List

	Basement
	1st Floor
	2nd Floor
	Bedrooms

(1) Exterior

	Wood/Shingle
X	Aluminum/Vinyl
	Brick
X	Insulation

(2) Windows

X	Many Avg. Few	X	Large Avg. Small

	Wood Sash
	Metal Sash
X	Vinyl Sash
	Double Hung
	Horiz. Slide
	Casement
	Double Glass
	Patio Doors
X	Storms & Screens

(3) Roof

X	Gable		Gambrel
	Hip		Mansard
	Flat		Shed

X	Asphalt Shingle

Chimney:

(3) Roof (cont.)

	Eavestrough
X	Insulation
0	Front Overhang
0	Other Overhang

(4) Interior

X	Drywall		Plaster
	Paneled		Wood T&G

Trim & Decoration

	Ex	X	Ord		Min

Size of Closets

	Lg	X	Ord		Small

Doors:		Solid	X	H.C.	

(5) Floors

Kitchen:
Other: Linoleum
Other: Carpeted

(6) Ceilings

X	Drywall

(7) Excavation

Basement: 0 S.F.
Crawl: 0 S.F.
Slab: 0 S.F.
Height to Joists: 0.0

(8) Basement

	Conc. Block
	Poured Conc.
	Stone
	Treated Wood
	Concrete Floor

(9) Basement Finish

	Recreation SF
	Living SF
	Walkout Doors (B)
	No Floor SF
	Walkout Doors (A)

(10) Floor Support

Joists:
Unsupported Len:
Cntr.Sup:

(11) Heating/Cooling

X	Gas		Oil		Elec.
	Wood		Coal		Steam

X	Forced Warm Air
	Wall Furnace
	Warm & Cool Air
	Heat Pump

	Central Air
	Wood Furnace

(12) Electric

150	Amps Service

No./Qual. of Fixtures

	Ex.	X	Ord.		Min

No. of Elec. Outlets

	Many	X	Ave.		Few

(13) Plumbing

	Average Fixture(s)
1	3 Fixture Bath
	2 Fixture Bath
	Softener, Auto
	Softener, Manual
	Solar Water Heat
	No Plumbing
	Extra Toilet
	Extra Sink
	Separate Shower
	Ceramic Tile Floor
	Ceramic Tile Wains
	Ceramic Tub Alcove
	Vent Fan

(14) Water/Sewer

	Public Water
	Public Sewer
1	Water Well
1	1000 Gal Septic
	2000 Gal Septic

Lump Sum Items:

(15) Built-ins

	Appliance Allow.
	Cook Top
	Dishwasher
	Garbage Disposal
	Bath Heater
	Vent Fan
	Hot Tub
	Unvented Hood
	Vented Hood
	Intercom
	Jacuzzi Tub
	Jacuzzi repl.Tub
	Oven
	Microwave
	Standard Range
	Self Clean Range
	Sauna
	Trash Compactor
	Central Vacuum
	Security System

(15) Fireplaces

	Interior 1 Story
	Interior 2 Story
	2nd/Same Stack
	Two Sided
	Exterior 1 Story
	Exterior 2 Story
	Prefab 1 Story
	Prefab 2 Story
	Heat Circulator
	Raised Hearth
	Wood Stove
	Direct-Vented Gas

Class: Fair
Effec. Age: 25
Floor Area:
Total Base New : 70,563 E.C.F.
Total Depr Cost: 24,699 X 1.297
Estimated T.C.V: 32,035

(16) Porches/Decks

Area	Type
80	WPP
28	WCP (1 Story)

(17) Garage

Year Built:
Car Capacity:
Class:
Exterior:
Brick Ven.:
Stone Ven.:
Common Wall:
Foundation:
Finished ?:
Auto. Doors:
Mech. Doors:
Area:
% Good:
Storage Area:
No Conc. Floor:

Bsmnt Garage:

Carport Area:
Roof:

Cost Est. for Res. Bldg: 1 Mobile Home SWT/DWT Cls Fair Blt 0
(11) Heating System: Forced Warm Air
Ground Area = 1088 SF Floor Area = 1088 SF.
Phy/Ab.Phy/Func/Econ/Comb. % Good=35/100/100/100/35
Building Areas

Type	Ext. Walls	Roof/Fnd.	Size	Cost New	Depr. Cost
Main Home	Ribbed	Metal	1088		
			Total:	54,146	18,952
Other Additions/Adjustments					
Skirting, Metal or Vinyl, Vertical			168	1,873	656
Water/Sewer					
1000 Gal Septic			1	4,582	1,604
Water Well, 100 Feet			1	5,680	1,988
Porches					
WPP			80	2,449	857
WCP (1 Story)			28	1,833	642
			Totals:	70,563	24,699

Notes:
ECF (RESIDENTIAL) 1.297 => TCV: 32,035

*** Information herein deemed reliable but not guaranteed***

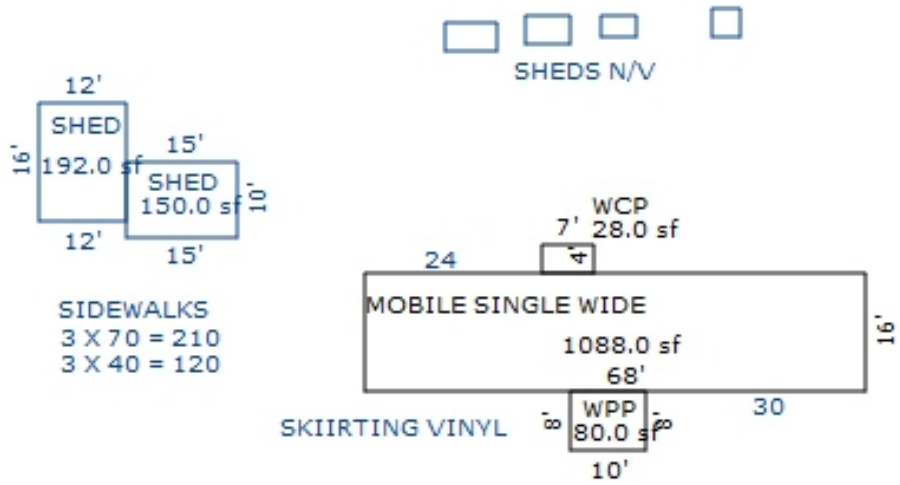

Sketch by Apex Sketch

*** Information herein deemed reliable but not guaranteed***

Parcel Number: 2410-26-4101 Jurisdiction: GREENWOOD TWP County: WEXFORD Printed on 02/15/2024

Grantor	Grantee	Sale Price	Sale Date	Inst. Type	Terms of Sale	Liber & Page	Verified By	Prcnt. Trans.
HARDEN, DONALD M	HARDEN, DONALD M & MICHAEI	0	08/11/2014	QC	09-FAMILY	670/74	DEED	0.0
HARDEN, DONALD M	HARDEN, DONALD M & SHELLY	0	03/30/2006	QC	09-FAMILY	586/286	DEED	0.0

Property Address

7307 N 35 RD

Owner's Name/Address

HARDEN, DONALD M & MICHAEL R PIANA
7307 N 35 RD
MANTON MI 49663

Tax Description

S 1/2 OF N 1/2 OF SE 1/4 40 A. M/L GW. SEC. 26 T24N R10W -MANTON-

Comments/Influences

The Equalizer. Copyright (c) 1999 - 2009. Licensed To: Township of Greenwood, County of Wexford, Michigan

Class: RESIDENTIAL-IMPROV Zoning:

School: MANTON CONSOLIDATED SCHOOLS

P.R.E. 0%

:

2024 Est TCV 114,782 TCV/TFA: 136.65

Building Permit(s)	Date	Number	Status
RESIDENTIAL - REMODEL	02/27/2007	PB13459	
RESIDENTIAL - REMODEL	04/03/2006	PB13091	

X	Improved		Vacant

	Public Improvements
	Dirt Road
X	Gravel Road
	Paved Road
	Storm Sewer
	Sidewalk
	Water
	Sewer
X	Electric
	Gas
	Curb
	Street Lights
	Standard Utilities
	Underground Utils.

	Topography of Site
	Level
X	Rolling
X	Low
	High
	Landscaped
	Swamp
	Wooded
	Pond
	Waterfront
	Ravine
	Wetland
	Flood Plain
X	OPEN

Who	When	What
GLA	07/10/2019	INSPECTION
GLA	07/10/2019	INSPECTION
GLA	08/03/2014	INSPECTION

Land Value Estimates for Land Table 4010.LAND VALUES

Description	Frontage	Depth	* Factors * Front	Depth	Rate	%Adj.	Reason	Value
ACREAGE			39.520 Acres		2,722	100		107,573
ROW			0.480 Acres		0	100		0
			40.00 Total Acres		Total Est. Land Value =			107,573

Year	Land Value	Building Value	Assessed Value	Board of Review	Tribunal/ Other	Taxable Value
2024	53,800	3,600	57,400			16,146C
2023	47,500	2,900	50,400			15,378C
2022	37,700	2,400	40,100			14,646C
2021	33,700	2,400	36,100			14,179C

*** Information herein deemed reliable but not guaranteed***

Building Type

X	Single Family
	Mobile Home
	Town Home
	Duplex
	A-Frame
X	Wood Frame

Building Style: PLAIN

Yr Built	Remodeled
0	0

Condition: Good

Room List

	Basement
	1st Floor
	2nd Floor
	Bedrooms

(1) Exterior

X	Wood/Shingle
	Aluminum/Vinyl
	Brick
X	Insulation

(2) Windows

X	Many Avg. Few		Large Avg. Small

	Wood Sash
	Metal Sash
X	Vinyl Sash
	Double Hung
	Horiz. Slide
	Casement
	Double Glass
	Patio Doors
X	Storms & Screens

(3) Roof

X	Gable		Gambrel
	Hip		Mansard
	Flat		Shed

X	Asphalt Shingle

Chimney:

(3) Roof (cont.)

	Eavestrough
X	Insulation
0	Front Overhang
0	Other Overhang

(4) Interior

X	Drywall Paneled		Plaster Wood T&G

Trim & Decoration

	Ex	X	Ord		Min

Size of Closets

	Lg	X	Ord		Small

Doors:		Solid	X	H.C.	

(5) Floors

Kitchen:
Other: Linoleum
Other: Carpeted

(6) Ceilings

X	Drywall

(7) Excavation

Basement: 0 S.F.
Crawl: 840 S.F.
Slab: 0 S.F.
Height to Joists: 0.0

(8) Basement

	Conc. Block
	Poured Conc.
	Stone
	Treated Wood
	Concrete Floor

(9) Basement Finish

	Recreation SF
	Living SF
	Walkout Doors (B)
	No Floor SF
	Walkout Doors (A)

(10) Floor Support

Joists:
Unsupported Len:
Cntr.Sup:

(11) Heating/Cooling

X	Gas		Oil		Elec.
	Wood		Coal		Steam

	Forced Air w/o Ducts
X	Forced Air w/ Ducts
	Forced Hot Water
	Electric Baseboard
	Elec. Ceil. Radiant
	Radiant (in-floor)
	Electric Wall Heat
	Space Heater
	Wall/Floor Furnace
	Forced Heat & Cool
	Heat Pump
	No Heating/Cooling

	Central Air
	Wood Furnace

(12) Electric

150	Amps Service

No./Qual. of Fixtures

	Ex.	X	Ord.		Min

No. of Elec. Outlets

	Many	X	Ave.		Few

(13) Plumbing

1	Average Fixture(s)
	3 Fixture Bath
	2 Fixture Bath
	Softener, Auto
	Softener, Manual
	Solar Water Heat
	No Plumbing
	Extra Toilet
	Extra Sink
	Separate Shower
	Ceramic Tile Floor
	Ceramic Tile Wains
	Ceramic Tub Alcove
	Vent Fan

(14) Water/Sewer

	Public Water
	Public Sewer
1	Water Well
1	1000 Gal Septic
	2000 Gal Septic

Lump Sum Items:

(15) Built-ins

	Appliance Allow.
	Cook Top
	Dishwasher
	Garbage Disposal
	Bath Heater
	Vent Fan
	Hot Tub
	Unvented Hood
	Vented Hood
	Intercom
	Jacuzzi Tub
	Jacuzzi repl.Tub
	Oven
	Microwave
	Standard Range
	Self Clean Range
	Sauna
	Trash Compactor
	Central Vacuum
	Security System

(15) Fireplaces

	Interior 1 Story
	Interior 2 Story
	2nd/Same Stack
	Two Sided
	Exterior 1 Story
	Exterior 2 Story
	Prefab 1 Story
	Prefab 2 Story
	Heat Circulator
	Raised Hearth
	Wood Stove
	Direct-Vented Gas

Class: D
Effec. Age: 59
Floor Area: 840
Total Base New : 123,512 E.C.F.
Total Depr Cost: 5,558 X 1.297
Estimated T.C.V: 7,209

(16) Porches/Decks

Area	Type
208	WGEP (1 Story)
120	WSEP (1 Story)

(17) Garage

Year Built:
Car Capacity:
Class:
Exterior:
Brick Ven.:
Stone Ven.:
Common Wall:
Foundation:
Finished ?:
Auto. Doors:
Mech. Doors:
Area:
% Good:
Storage Area:
No Conc. Floor:

Bsmnt Garage:

Carport Area:
Roof:

Cost Est. for Res. Bldg: 1 Single Family PLAIN Cls D Blt 0
(11) Heating System: Forced Air w/ Ducts
Ground Area = 840 SF Floor Area = 840 SF.
Phy/Ab.Phy/Func/Econ/Comb. % Good=45/100/50/20/4.5
Functional Depreciation because of: OLD HOUSE NOT LIVEABLE
Building Areas

Stories	Exterior	Foundation	Size	Cost New	Depr. Cost
1 Story	Siding	Crawl Space	384		
1 Story	Siding	Crawl Space	456		
			Total:	95,045	4,277
Other Additions/Adjustments					
Water/Sewer					
1000 Gal Septic			1	4,293	193
Water Well, 100 Feet			1	5,545	250
Porches					
WGEP (1 Story)			208	13,050	587
WSEP (1 Story)			120	5,579	251
			Totals:	123,512	5,558

Notes:
ECF (RESIDENTIAL) 1.297 => TCV: 7,209

*** Information herein deemed reliable but not guaranteed***

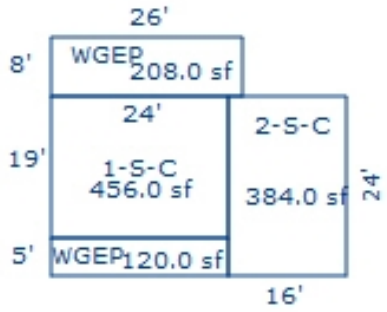

Sketch by Apex Sketch

*** Information herein deemed reliable but not guaranteed***

Parcel Number: 2410-26-4102 Jurisdiction: GREENWOOD TWP County: WEXFORD Printed on 02/15/2024

Grantor	Grantee	Sale Price	Sale Date	Inst. Type	Terms of Sale	Liber & Page	Verified By	Prcnt. Trans.
HARDEN, DONALD M BY POA EV	PIANA, MICHAEL R	0	06/24/2015	QC	09-FAMILY	675/1517	DEED	0.0

Property Address

7379 N 35 RD

Owner's Name/Address

PIANA, MICHAEL R
948 DIVISION ST
ADRIAN MI 49221

Tax Description

N 1/2 OF N 1/2 OF SE 1/4 40 A. M/L GW. SEC. 26 T24N R10W - MANTON - [[ASSESSED W/26-4101 '97

Comments/Influences

The Equalizer. Copyright (c) 1999 - 2009.
Licensed To: Township of Greenwood, County of Wexford, Michigan

Class: RESIDENTIAL-IMPROV Zoning:
School: MANTON CONSOLIDATED SCHOOLS
P.R.E. 0%
:
2024 Est TCV 254,265 TCV/TFA: 201.16

Building Permit(s)	Date	Number	Status
RESIDENTIAL - REMODEL	04/06/2007	PE17870	
RESIDENTIAL - NEW	03/27/2007	PE17856	
RESIDENTIAL - REMODEL	05/08/2006	PE17464	
RESIDENTIAL - REMODEL	11/28/2005	PM8803	

X	Improved		Vacant

	Public Improvements
	Dirt Road
X	Gravel Road
	Paved Road
	Storm Sewer
	Sidewalk
	Water
	Sewer
X	Electric
	Gas
	Curb
	Street Lights
	Standard Utilities
	Underground Utils.

	Topography of Site
	Level
X	Rolling
X	Low
	High
	Landscaped
	Swamp
X	Wooded
	Pond
	Waterfront
	Ravine
	Wetland
	Flood Plain
X	OPEN/PINES

Who	When	What
GLA	07/10/2019	INSPECTION
GLA	07/10/2019	INSPECTION
GLA	08/03/2014	INSPECTION

Land Value Estimates for Land Table 4010.LAND VALUES

Description	Frontage	Depth	* Factors * Front	Depth	Rate	%Adj.	Reason	Value
ACREAGE			39.520 Acres		2,722	100		107,573
ROW			0.480 Acres		0	100		0
			40.00 Total Acres		Total Est. Land Value =			107,573

Land Improvement Cost Estimates

Description	Rate	Size	% Good	Cash Value
D/W/P: 3.5 Concrete	6.63	48	56	178
D/W/P: 3.5 Concrete	6.63	672	56	2,495
D/W/P: 4in Concrete	7.01	180	56	707
D/W/P: Asphalt Paving	3.12	2000	56	3,494
Wood Frame	26.52	160	56	2,376
Total Estimated Land Improvements True Cash Value =				9,250

Year	Land Value	Building Value	Assessed Value	Board of Review	Tribunal/ Other	Taxable Value
2024	53,800	73,300	127,100			46,903C
2023	47,500	60,700	108,200			44,670C
2022	37,700	51,700	89,400			42,543C
2021	33,700	52,200	85,900		85,900R	41,184C

*** Information herein deemed reliable but not guaranteed***

Building Type

X	Single Family
	Mobile Home
	Town Home
	Duplex
	A-Frame
X	Wood Frame

Building Style: PLAIN

Yr Built	Remodeled
0	2005

Condition: Good

Room List

	Basement
	1st Floor
	2nd Floor
	Bedrooms

(1) Exterior

X	Wood/Shingle
	Aluminum/Vinyl
	Brick
X	Insulation

(2) Windows

	Many		Large
X	Avg.	X	Avg.
	Few		Small

	Wood Sash
	Metal Sash
X	Vinyl Sash
	Double Hung
	Horiz. Slide
	Casement
	Double Glass
	Patio Doors
X	Storms & Screens

(3) Roof

X	Gable		Gambrel
	Hip		Mansard
	Flat		Shed

X	Asphalt Shingle

Chimney:

(3) Roof (cont.)

	Eavestrough
X	Insulation
0	Front Overhang
0	Other Overhang

(4) Interior

X	Drywall	X	Plaster
	Paneled		Wood T&G

Trim & Decoration

	Ex	X	Ord		Min

Size of Closets

	Lg	X	Ord		Small

Doors:		Solid	X	H.C.	

(5) Floors

Kitchen:
Other: Linoleum
Other: Carpeted

(6) Ceilings

X	Drywall
X	Plaster

(7) Excavation

Basement: 0 S.F.
Crawl: 0 S.F.
Slab: 1264 S.F.
Height to Joists: 0.0

(8) Basement

	Conc. Block
	Poured Conc.
	Stone
	Treated Wood
	Concrete Floor

(9) Basement Finish

	Recreation SF
	Living SF
	Walkout Doors (B)
	No Floor SF
	Walkout Doors (A)

(10) Floor Support

Joists:
Unsupported Len:
Cntr.Sup:

(11) Heating/Cooling

X	Gas		Oil		Elec.
	Wood		Coal		Steam

	Forced Air w/o Ducts
X	Forced Air w/ Ducts
	Forced Hot Water
	Electric Baseboard
	Elec. Ceil. Radiant
	Radiant (in-floor)
	Electric Wall Heat
	Space Heater
	Wall/Floor Furnace
	Forced Heat & Cool
	Heat Pump
	No Heating/Cooling

	Central Air
	Wood Furnace

(12) Electric

150	Amps Service

No./Qual. of Fixtures

	Ex.	X	Ord.		Min

No. of Elec. Outlets

	Many	X	Ave.		Few

(13) Plumbing

	Average Fixture(s)
1	3 Fixture Bath
	2 Fixture Bath
	Softener, Auto
	Softener, Manual
	Solar Water Heat
	No Plumbing
	Extra Toilet
	Extra Sink
	Separate Shower
	Ceramic Tile Floor
	Ceramic Tile Wains
	Ceramic Tub Alcove
	Vent Fan

(14) Water/Sewer

	Public Water
	Public Sewer
1	Water Well
1	1000 Gal Septic
	2000 Gal Septic

Lump Sum Items:

(15) Built-ins

	Appliance Allow.
	Cook Top
	Dishwasher
	Garbage Disposal
	Bath Heater
	Vent Fan
	Hot Tub
	Unvented Hood
	Vented Hood
	Intercom
	Jacuzzi Tub
	Jacuzzi repl.Tub
	Oven
	Microwave
	Standard Range
	Self Clean Range
	Sauna
	Trash Compactor
	Central Vacuum
	Security System

(15) Fireplaces

	Interior 1 Story
	Interior 2 Story
	2nd/Same Stack
	Two Sided
	Exterior 1 Story
	Exterior 2 Story
	Prefab 1 Story
	Prefab 2 Story
	Heat Circulator
	Raised Hearth
	Wood Stove
	Direct-Vented Gas

Class: CD
Effec. Age: 44
Floor Area: 1,264
Total Base New : 189,227 E.C.F.
Total Depr Cost: 105,969 X 1.297
Estimated T.C.V: 137,442

(16) Porches/Decks

Area	Type
100	WCP (1 Story)
120	CCP (1 Story)
240	Treated Wood

(17) Garage

Year Built:
Car Capacity:
Class: CD
Exterior: Siding
Brick Ven.: 0
Stone Ven.: 0
Common Wall: Detache
Foundation: 18 Inch
Finished ?:
Auto. Doors: 0
Mech. Doors: 0
Area: 840
% Good: 0
Storage Area: 0
No Conc. Floor: 0

Bsmnt Garage:

Carport Area:
Roof:

Cost Est. for Res. Bldg: 1 Single Family PLAIN Cls CD Blt 0
(11) Heating System: Forced Air w/ Ducts
Ground Area = 1264 SF Floor Area = 1264 SF.
Phy/Ab.Phy/Func/Econ/Comb. % Good=56/100/100/100/56
Building Areas

Stories	Exterior	Foundation	Size	Cost New	Depr. Cost
1 Story	Siding	Slab	1,264		
			Total:	140,760	78,827
Other Additions/Adjustments					
Water/Sewer					
1000 Gal Septic			1	4,582	2,566
Water Well, 100 Feet			1	5,680	3,181
Porches					
WCP (1 Story)			100	4,312	2,415
CCP (1 Story)			120	3,064	1,716
Deck					
Treated Wood			240	4,596	2,574
Garages					
Class: CD Exterior: Siding Foundation: 18 Inch (Unfinished)					
Base Cost			840	26,233	14,690
			Totals:	189,227	105,969

Notes:
ECF (RESIDENTIAL) 1.297 => TCV: 137,442

*** Information herein deemed reliable but not guaranteed***

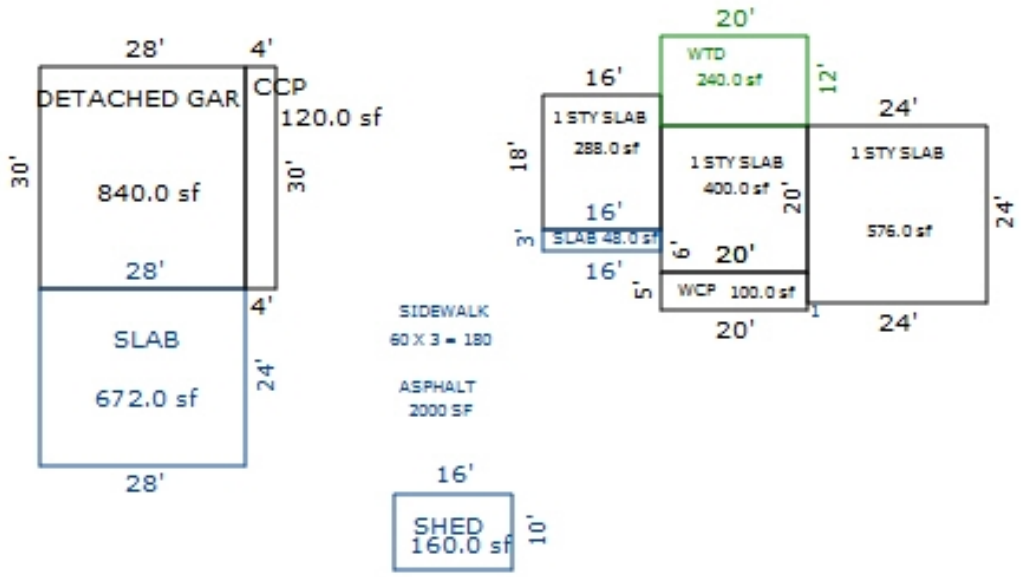

Sketch by Apex Sketch

*** Information herein deemed reliable but not guaranteed***

Parcel Number: 2410-26-4301 Jurisdiction: GREENWOOD TWP County: WEXFORD Printed on 02/15/2024

Grantor	Grantee	Sale Price	Sale Date	Inst. Type	Terms of Sale	Liber & Page	Verified By	Prcnt. Trans.
CULVER, LINA M LE	LAFRENIERE, MATTHEW & JESS	40,000	04/04/2012	WD	03-ARM'S LENGTH	646/2764	DEED	100.0
CULVER, LINA M	CULVER, LINA M LE ETAL	0	04/13/2011	QC	18-LIFE ESTATE	638/2161	DEED	0.0
MINOR, NORMA D.	CULVER, GERALD R.	14,000	09/30/1992	LC	03-ARM'S LENGTH	331:522	DEED	0.0

Property Address

Class: RESIDENTIAL-VACANT Zoning:

School: MANTON CONSOLIDATED SCHOOLS

P.R.E. 100% 03/22/2013 Qual. Ag.

:

2024 Est TCV 106,212

Building Permit(s)	Date	Number	Status

Owner's Name/Address

LAFRENIERE, MATTHEW & JESSICA
ROBERT FOUNTAIN
1014 E LAKE MITCHELL DR
CADILLAC MI 49601

	Improved	X	Vacant

Land Value Estimates for Land Table 4010.LAND VALUES

Public Improvements	
	Dirt Road
X	Gravel Road
	Paved Road
	Storm Sewer
	Sidewalk
	Water
	Sewer
X	Electric
	Gas
	Curb
	Street Lights
	Standard Utilities
	Underground Utils.

Topography of Site	
	Level
X	Rolling
X	Low
	High
	Landscaped
	Swamp
	Wooded
	Pond
	Waterfront
	Ravine
	Wetland
	Flood Plain
X	OPEN

Who	When	What
GLA	07/10/2019	INSPECTION
GLA	07/10/2019	INSPECTION
LM	08/09/2012	SALES INSP

Description	Frontage	Depth	* Factors * Front	Depth	Rate	%Adj.	Reason	Value
HELSEL RIV LOW	1279.52	1288.05	1.0000	0.0000	315	100*		0
ACREAGE			39.020 Acres		2,722	100		106,212
ROW			0.980 Acres		0	100		0

* denotes lines that do not contribute to the total acreage calculation.

1280 Actual Front Feet, 40.00 Total Acres Total Est. Land Value = 106,212

Tax Description

SW 1/4 OF SE 1/4 40 A. GW. SEC. 26 T24N R10W -MANTON-

Comments/Influences

Year	Land Value	Building Value	Assessed Value	Board of Review	Tribunal/ Other	Taxable Value
2024	53,100	0	53,100			27,370C
2023	47,000	0	47,000			26,067C
2022	37,400	0	37,400			24,826C
2021	33,300	0	33,300			24,033C

The Equalizer. Copyright (c) 1999 - 2009.
Licensed To: Township of Greenwood, County of Wexford, Michigan

*** Information herein deemed reliable but not guaranteed***

Parcel Number: 2410-26-4401 Jurisdiction: GREENWOOD TWP County: WEXFORD Printed on 02/15/2024

Grantor	Grantee	Sale Price	Sale Date	Inst. Type	Terms of Sale	Liber & Page	Verified By	Prcnt. Trans.
WARNER, KENT A	LANDER'S INVESTMENTS II LI	103,000	11/22/2016	LC	03-ARM'S LENGTH	678 / 2717	DEED	100.0
WARNER, DANA D	WARNER, KENT A	0	12/17/2007	OTH	06-COURT JUDGEMENT	621/1042	DEED	0.0
HOOVER, ROBERT & JOAN	WARNER, KENT & DANA	39,000	03/08/2002	WD	08-ESTATE	386:730	DEED	0.0
HOOVER, ROBERT P.	WARNER, KENT & DANA	35,000	03/07/2001	LC	03-ARM'S LENGTH	379:94	DEED	0.0

Property Address

7223 N 35 RD

Owner's Name/Address

LANDER'S INVESTMENTS II LLC
18230 SW 228TH
MIAMI FL 33170

Tax Description

N 1/2 OF SE 1/4 OF SE 1/4 20 A. GW. SEC. 26 T24N R10W -MANTON-

Comments/Influences

Class: RESIDENTIAL-IMPROV Zoning:

School: MANTON CONSOLIDATED SCHOOLS

P.R.E. 0%

:

2024 Est TCV 179,063 TCV/TFA: 100.48

Building Permit(s)	Date	Number	Status
RESIDENTIAL - REMODEL	05/12/2003	PM6701	
MOBILE HOME	05/15/2002	PM5872	
MOBILE HOME	05/07/2002	PP2582	
MOBILE HOME	04/29/2002	PE14411	

X Improved | Vacant

Public Improvements

- Dirt Road
- X Gravel Road
- X Paved Road
- Storm Sewer
- Sidewalk
- Water
- Sewer
- X Electric
- Gas
- Curb
- Street Lights
- Standard Utilities
- Underground Utils.

Topography of Site

- Level
- X Rolling
- X Low
- X High
- Landscaped
- Swamp
- X Wooded
- Pond
- Waterfront
- Ravine
- Wetland
- Flood Plain
- X OPEN/PINES

Land Value Estimates for Land Table 4010.LAND VALUES

Description	Frontage	Depth	* Factors * Front	Depth	Rate	%Adj.	Reason	Value
ACREAGE			19.520 Acres		3,200	100		62,464
ROW			0.480 Acres		0	100		0
			20.00 Total Acres		Total Est. Land Value =			62,464

Land Improvement Cost Estimates

Description	Rate	Size	% Good	Cash Value
D/W/P: 3.5 Concrete	6.63	144	53	506
Total Estimated Land Improvements True Cash Value =				506

Who	When	What
GLA	07/10/2019	INSPECTION
GLA	07/10/2019	INSPECTION

Year	Land Value	Building Value	Assessed Value	Board of Review	Tribunal/ Other	Taxable Value
2024	31,200	58,300	89,500			56,835C
2023	25,400	48,700	74,100			54,129C
2022	21,500	42,100	63,600			51,552C
2021	19,800	37,200	57,000			49,906C

The Equalizer. Copyright (c) 1999 - 2009.
Licensed To: Township of Greenwood, County of Wexford, Michigan

*** Information herein deemed reliable but not guaranteed***

Building Type

	Single Family
X	Mobile Home
	Town Home
	Duplex
	A-Frame

X	Wood Frame

Building Style: SWT/DWT

Yr Built	Remodeled
2002	0

Condition: Good

Room List

	Basement
	1st Floor
	2nd Floor
	Bedrooms

(1) Exterior

	Wood/Shingle
X	Aluminum/Vinyl
	Brick
X	Insulation

(2) Windows

	Many		Large
X	Avg.	X	Avg.
	Few		Small

	Wood Sash
	Metal Sash
X	Vinyl Sash
	Double Hung
	Horiz. Slide
	Casement
	Double Glass
	Patio Doors
X	Storms & Screens

(3) Roof

X	Gable		Gambrel
	Hip		Mansard
	Flat		Shed

X	Asphalt Shingle

Chimney:

(3) Roof (cont.)

	Eavestrough
X	Insulation
0	Front Overhang
0	Other Overhang

(4) Interior

X	Drywall		Plaster
	Paneled		Wood T&G

Trim & Decoration

	Ex	X	Ord		Min

Size of Closets

	Lg	X	Ord		Small

Doors:		Solid	X	H.C.	

(5) Floors

Kitchen:
Other: Linoleum
Other: Carpeted

(6) Ceilings

X	Drywall		

(7) Excavation

Basement: 0 S.F.
Crawl: 0 S.F.
Slab: 0 S.F.
Height to Joists: 0.0

(8) Basement

	Conc. Block
	Poured Conc.
	Stone
	Treated Wood
	Concrete Floor

(9) Basement Finish

	Recreation SF
	Living SF
	Walkout Doors (B)
	No Floor SF
	Walkout Doors (A)

(10) Floor Support

Joists:
Unsupported Len:
Cntr.Sup:

(11) Heating/Cooling

X	Gas		Oil		Elec.
	Wood		Coal		Steam

X	Forced Warm Air
	Wall Furnace
	Warm & Cool Air
	Heat Pump
	Central Air
	Wood Furnace

(12) Electric

150	Amps Service

No./Qual. of Fixtures

	Ex.	X	Ord.		Min

No. of Elec. Outlets

	Many	X	Ave.		Few

(13) Plumbing

	Average Fixture(s)
1	3 Fixture Bath
	2 Fixture Bath
	Softener, Auto
	Softener, Manual
	Solar Water Heat
	No Plumbing
	Extra Toilet
	Extra Sink
	Separate Shower
	Ceramic Tile Floor
	Ceramic Tile Wains
	Ceramic Tub Alcove
	Vent Fan

(14) Water/Sewer

	Public Water
	Public Sewer
1	Water Well
1	1000 Gal Septic
	2000 Gal Septic

Lump Sum Items:

(15) Built-ins

	Appliance Allow.
	Cook Top
	Dishwasher
	Garbage Disposal
	Bath Heater
	Vent Fan
	Hot Tub
	Unvented Hood
	Vented Hood
	Intercom
	Jacuzzi Tub
	Jacuzzi repl.Tub
	Oven
	Microwave
	Standard Range
	Self Clean Range
	Sauna
	Trash Compactor
	Central Vacuum
	Security System

(15) Fireplaces

	Interior 1 Story
	Interior 2 Story
	2nd/Same Stack
	Two Sided
	Exterior 1 Story
	Exterior 2 Story
	Prefab 1 Story
	Prefab 2 Story
	Heat Circulator
	Raised Hearth
	Wood Stove
	Direct-Vented Gas

Class: Average
Effec. Age: 21
Floor Area:
Total Base New : 168,885 E.C.F.
Total Depr Cost: 89,509 X 1.297
Estimated T.C.V: 116,093

(16) Porches/Decks

Area	Type
25	WPP

(17) Garage

Year Built:
Car Capacity:
Class: CD
Exterior: Pole
Brick Ven.: 0
Stone Ven.: 0
Common Wall: Detache
Foundation: 18 Inch
Finished ?:
Auto. Doors: 0
Mech. Doors: 0
Area: 1200
% Good: 0
Storage Area: 0
No Conc. Floor: 0

Bsmnt Garage:

Carport Area:
Roof:

Cost Est. for Res. Bldg: 1 Mobile Home SWT/DWT Cls Average Blt 2002
(11) Heating System: Forced Warm Air
Ground Area = 1782 SF Floor Area = 1782 SF.
Phy/Ab.Phy/Func/Econ/Comb. % Good=53/100/100/100/53
Building Areas

Type	Ext. Walls	Roof/Fnd.	Size	Cost New	Depr. Cost
Main Home	Siding	Comp.Shingle	1782		
			Total:	106,616	56,506
Other Additions/Adjustments					
Skirting, Metal or Vinyl, Vertical			186	2,128	1,128
Water/Sewer					
1000 Gal Septic			1	4,899	2,596
Water Well, 100 Feet			1	5,849	3,100
Porches					
WPP			25	1,386	735
Garages					
Class: CD Exterior: Pole (Unfinished)					
Base Cost			960	21,907	11,611
Class: CD Exterior: Pole (Unfinished)					
Base Cost			1200	26,100	13,833
			Totals:	168,885	89,509

Notes:
ECF (RESIDENTIAL) 1.297 => TCV: 116,093

*** Information herein deemed reliable but not guaranteed***

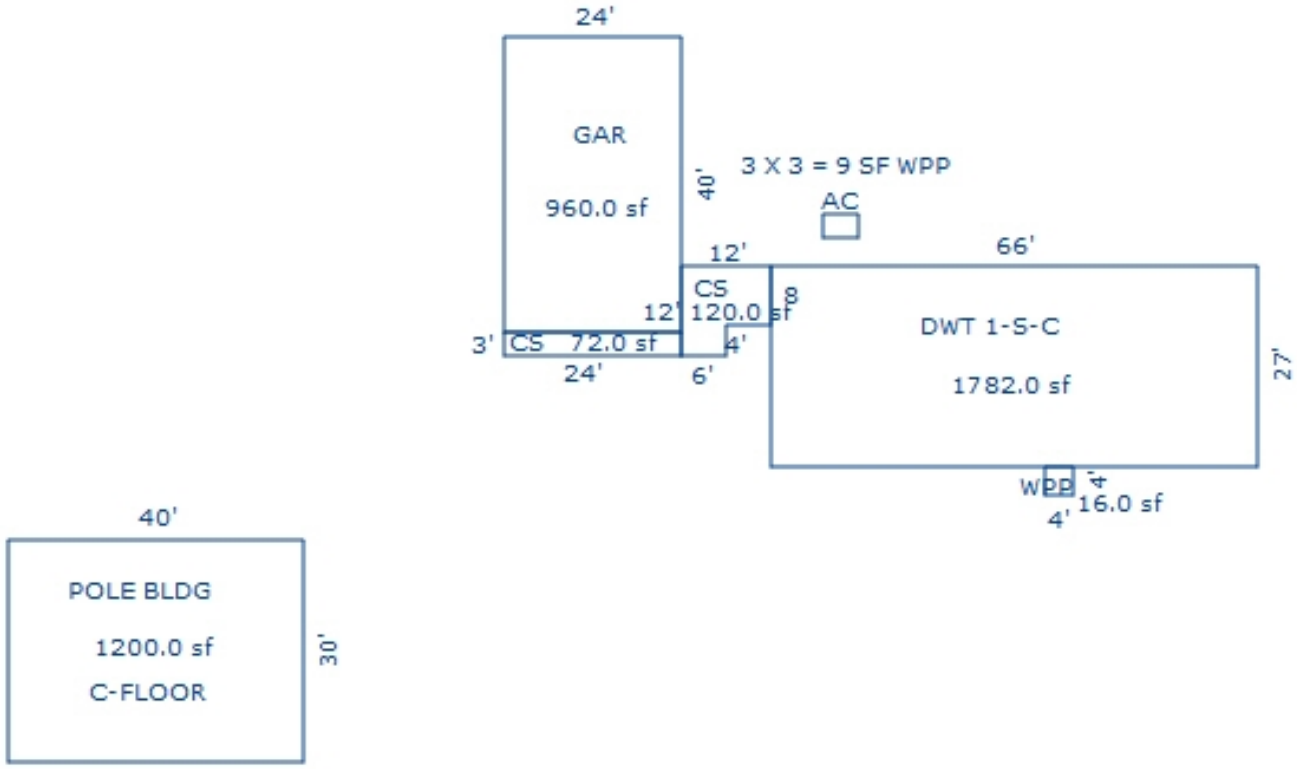

Sketch by Apex Sketch

*** Information herein deemed reliable but not guaranteed***

Parcel Number: 2410-26-4402 Jurisdiction: GREENWOOD TWP County: WEXFORD Printed on 02/15/2024

Grantor	Grantee	Sale Price	Sale Date	Inst. Type	Terms of Sale	Liber & Page	Verified By	Prcnt. Trans.
FLEISCHFRESSER, DIANE ETAL	BABB, JODY M	68,794	06/05/2007	WD	03-ARM'S LENGTH	601/626	DEED	100.0
BROWN, STEVEN J.	COX, WARREN L.	34,000	05/08/1990	WD	03-ARM'S LENGTH	320:350	DEED	0.0

Property Address
4991 E 12 RD

Owner's Name/Address
BABB, JODY M
4991 E 12 RD
MANTON MI 49663

Tax Description
S 1/2 OF SE 1/4 OF SE 1/4 20 A. GW. SEC. 26 T24N R10W -MANTON-

Comments/Influences

Class: RESIDENTIAL-IMPROV Zoning:
School: MANTON CONSOLIDATED SCHOOLS
P.R.E. 100% / /
:
2024 Est TCV 174,092 TCV/TFA: 139.50

Building Permit(s)	Date	Number	Status

X Improved | Vacant

	Public Improvements
	Dirt Road
X	Gravel Road
X	Paved Road
	Storm Sewer
	Sidewalk
	Water
	Sewer
X	Electric
	Gas
	Curb
	Street Lights
	Standard Utilities
	Underground Utils.

	Topography of Site
	Level
X	Rolling
X	Low
X	High
	Landscaped
X	Swamp
X	Wooded
	Pond
	Waterfront
	Ravine
	Wetland
	Flood Plain
X	OPEN/PINES

Who	When	What
GLA	07/10/2019	INSPECTION
GLA	07/10/2019	INSPECTION
GLA	08/03/2014	INSPECTION

The Equalizer. Copyright (c) 1999 - 2009.
Licensed To: Township of Greenwood, County of Wexford, Michigan

Land Value Estimates for Land Table 4010.LAND VALUES

Description	Frontage	Depth	* Factors * Front	Depth	Rate	%Adj.	Reason	Value
ACREAGE			18.540 Acres		3,200	100		59,328
ROW			1.460 Acres		0	100		0
			20.00 Total Acres		Total Est. Land Value =			59,328

Land Improvement Cost Estimates

Description	Rate	Size	% Good	Cash Value
Wood Frame	24.32	140	30	1,021
Total Estimated Land Improvements True Cash Value =				1,021

Year	Land Value	Building Value	Assessed Value	Board of Review	Tribunal/ Other	Taxable Value
2024	29,700	57,300	87,000			42,900C
2023	24,100	46,400	70,500			40,858C
2022	20,600	38,800	59,400			38,913C
2021	19,400	38,800	58,200			37,670C

*** Information herein deemed reliable but not guaranteed***

Building Type

X	Single Family
	Mobile Home
	Town Home
	Duplex
	A-Frame
X	Wood Frame

Building Style: TWO STORY

Yr Built	Remodeled
1900	0

Condition: Poor

Room List

	Basement
	1st Floor
	2nd Floor
	Bedrooms

(1) Exterior

	Wood/Shingle
	Aluminum/Vinyl
	Brick
X	Lap Siding
	Insulation

(2) Windows

X	Many Avg. Few	X	Large Avg. Small

	Wood Sash
	Metal Sash
X	Vinyl Sash
X	Double Hung
	Horiz. Slide
	Casement
	Double Glass
	Patio Doors
	Storms & Screens

(3) Roof

X	Gable		Gambrel
	Hip		Mansard
	Flat		Shed

X	Asphalt Shingle

Chimney: Brick

(3) Roof (cont.)

	Eavestrough
	Insulation
0	Front Overhang
0	Other Overhang

(4) Interior

	Drywall		Plaster
	Paneled		Wood T&G

Trim & Decoration

	Ex	X	Ord		Min

Size of Closets

	Lg	X	Ord		Small

Doors:		Solid	X	H.C.	

(5) Floors

Kitchen:
Other:
Other:

(6) Ceilings

(7) Excavation

Basement: 624 S.F.
Crawl: 0 S.F.
Slab: 312 S.F.
Height to Joists: 0.0

(8) Basement

	Conc. Block
	Poured Conc.
	Stone
	Treated Wood
	Concrete Floor

(9) Basement Finish

	Recreation SF
	Living SF
	Walkout Doors (B)
	No Floor SF
	Walkout Doors (A)

(10) Floor Support

Joists:
Unsupported Len:
Cntr.Sup:

(11) Heating/Cooling

X	Gas		Oil		Elec.
	Wood		Coal		Steam

	Forced Air w/o Ducts
X	Forced Air w/ Ducts
	Forced Hot Water
	Electric Baseboard
	Elec. Ceil. Radiant
	Radiant (in-floor)
	Electric Wall Heat
	Space Heater
	Wall/Floor Furnace
	Forced Heat & Cool
	Heat Pump
	No Heating/Cooling

	Central Air
	Wood Furnace

(12) Electric

0	Amps Service

No./Qual. of Fixtures

	Ex.	X	Ord.		Min

No. of Elec. Outlets

	Many	X	Ave.		Few

(13) Plumbing

1	Average Fixture(s)
	3 Fixture Bath
	2 Fixture Bath
	Softener, Auto
	Softener, Manual
	Solar Water Heat
	No Plumbing
	Extra Toilet
	Extra Sink
	Separate Shower
	Ceramic Tile Floor
	Ceramic Tile Wains
	Ceramic Tub Alcove
	Vent Fan

(14) Water/Sewer

	Public Water
	Public Sewer
1	Water Well
1	1000 Gal Septic
	2000 Gal Septic

Lump Sum Items:

(15) Built-ins

	Appliance Allow.
	Cook Top
	Dishwasher
	Garbage Disposal
	Bath Heater
	Vent Fan
	Hot Tub
	Unvented Hood
	Vented Hood
	Intercom
	Jacuzzi Tub
	Jacuzzi repl.Tub
	Oven
	Microwave
	Standard Range
	Self Clean Range
	Sauna
	Trash Compactor
	Central Vacuum
	Security System

(15) Fireplaces

	Interior 1 Story
	Interior 2 Story
	2nd/Same Stack
	Two Sided
	Exterior 1 Story
	Exterior 2 Story
	Prefab 1 Story
	Prefab 2 Story
	Heat Circulator
	Raised Hearth
	Wood Stove
	Direct-Vented Gas

Class: CD
Effec. Age: 70
Floor Area: 1,248
Total Base New : 194,378 E.C.F.
Total Depr Cost: 87,697 X 1.297
Estimated T.C.V: 113,743

(16) Porches/Decks

Area	Type
84	WGEP (1 Story)
544	WPP

(17) Garage

Year Built:
Car Capacity:
Class: CD
Exterior: Pole
Brick Ven.: 0
Stone Ven.: 0
Common Wall: Detache
Foundation: 18 Inch
Finished ?:
Auto. Doors: 0
Mech. Doors: 0
Area: 1050
% Good: 46
Storage Area: 0
No Conc. Floor: 0

Bsmnt Garage:

Carport Area:
Roof:

Cost Est. for Res. Bldg: 1 Single Family TWO STORY Cls CD Blt 1900
(11) Heating System: Forced Air w/ Ducts
Ground Area = 936 SF Floor Area = 1248 SF.
Phy/Ab.Phy/Func/Econ/Comb. % Good=45/100/100/100/45
Building Areas

Stories	Exterior	Foundation	Size	Cost New	Depr. Cost	
1 Story	Siding	Slab	312			
1.5 Story	Siding	Basement	624			
			Total:	145,268	65,370	
Other Additions/Adjustments						
Water/Sewer						
1000 Gal Septic			1	4,582	2,062	
Water Well, 100 Feet			1	5,680	2,556	
Porches						
WGEP (1 Story)			84	7,921	3,564	
WPP			544	8,089	3,640	
Garages						
Class: CD Exterior: Pole (Unfinished)						
Base Cost			1050	22,838	10,505	*4
			Totals:	194,378	87,697	

Notes:
ECF (RESIDENTIAL) 1.297 => TCV: 113,743

*** Information herein deemed reliable but not guaranteed***

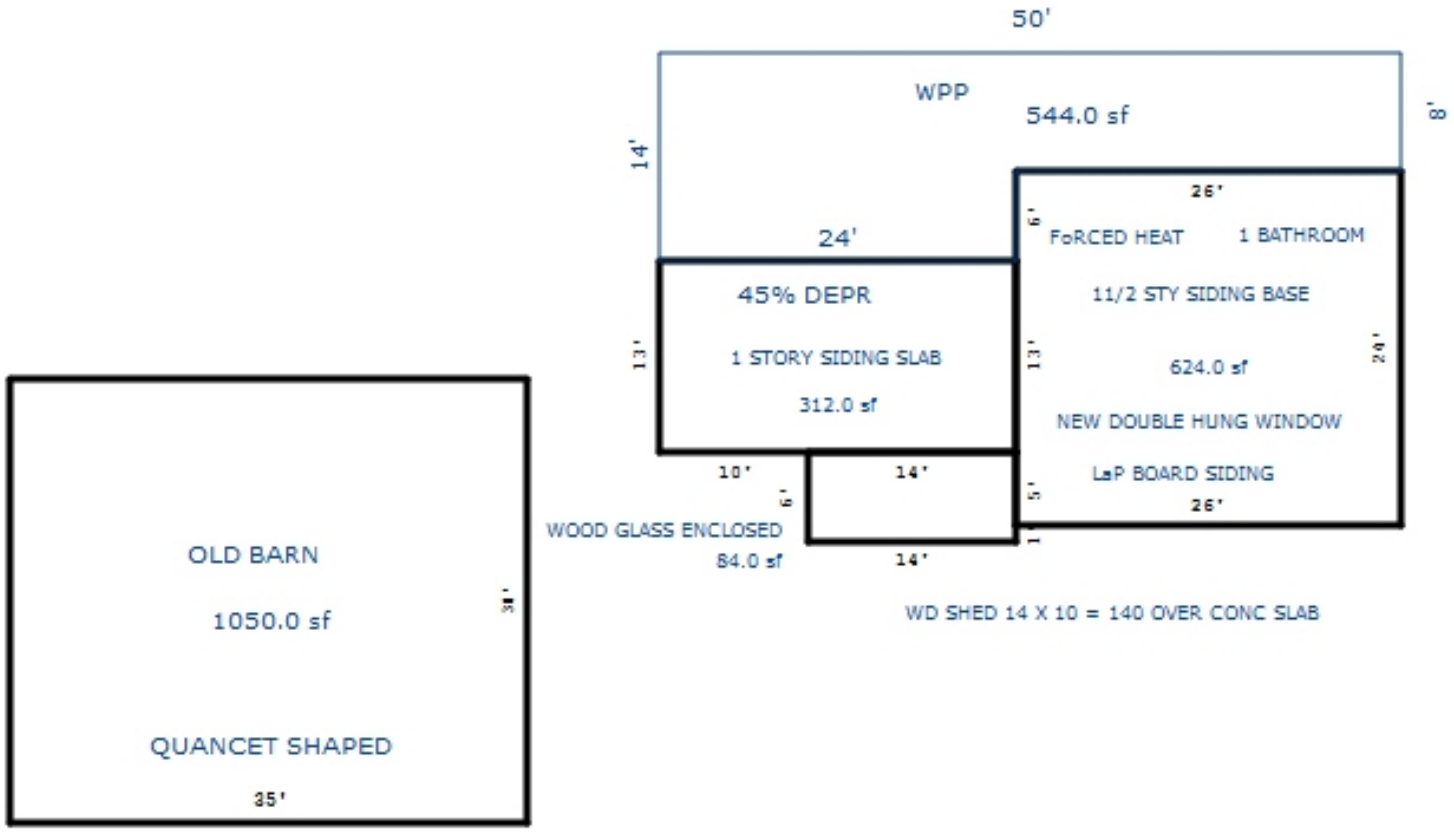

Sketch by Apex Sketch

*** Information herein deemed reliable but not guaranteed***

Parcel Number: 2410-27-1101 Jurisdiction: GREENWOOD TWP County: WEXFORD Printed on 02/15/2024

Grantor	Grantee	Sale Price	Sale Date	Inst. Type	Terms of Sale	Liber & Page	Verified By	Prcnt. Trans.
DUTCHMAN PROPERTIES LLC	WARREN, CURTIS F	40,500	07/10/2018	WD	03-ARM'S LENGTH	683 / 160	DEED	100.0
MOORMAN, GENE & LOU ANN	VANDERWEIDE, STEPHEN & DEE	53,743	12/04/2002	WD	03-ARM'S LENGTH	456:558	DEED	0.0
O'BRIEN, JOHN M.	MOORMAN, GENE C.	31,000	06/20/1994	LC	03-ARM'S LENGTH	340:155	DEED	0.0

Property Address

3304 E 10 RD

Owner's Name/Address

WARREN, CURTIS F
3304 E 10 RD
MANTON MI 49663

Tax Description

W 1/2 OF NE 1/4 OF NW 1/4 20 A GW. SEC. 27 T24N R10W -MANTON- QUALIFIED AG AFFIDAVIT

Comments/Influences

The Equalizer. Copyright (c) 1999 - 2009. Licensed To: Township of Greenwood, County of Wexford, Michigan

Class: RESIDENTIAL-IMPROV Zoning:

School: MANTON CONSOLIDATED SCHOOLS

P.R.E. 100% 10/21/2019

:

2024 Est TCV 232,568 TCV/TFA: 244.29

Building Permit(s)	Date	Number	Status
RESIDENTIAL - NEW	08/06/2018	PB18-0140	COMPLETE

X Improved | Vacant

	Public Improvements
	Dirt Road
X	Gravel Road
	Paved Road
	Storm Sewer
	Sidewalk
	Water
	Sewer
X	Electric
	Gas
	Curb
	Street Lights
	Standard Utilities
	Underground Utils.

	Topography of Site
X	Level
X	Rolling
	Low
	High
	Landscaped
	Swamp
	Wooded
	Pond
	Waterfront
	Ravine
	Wetland
	Flood Plain
X	OPEN/PINES

Who	When	What
GLA	07/10/2019	INSPECTION
GLA	07/10/2019	INSPECTION
	11/22/2013	

Land Value Estimates for Land Table 4010.LAND VALUES

Description	Frontage	Depth	* Factors * Front	Depth	Rate	%Adj.	Reason	Value
ACREAGE			19.500 Acres		3,200	100		62,400
ROW			0.500 Acres		0	100		0
			20.00 Total Acres		Total Est. Land Value =			62,400

Year	Land Value	Building Value	Assessed Value	Board of Review	Tribunal/ Other	Taxable Value
2024	31,200	85,100	116,300			84,191C
2023	25,400	69,300	94,700			80,182C
2022	21,500	58,500	80,000			76,364C
2021	19,800	59,200	79,000			73,925C

*** Information herein deemed reliable but not guaranteed***

Building Type

X	Single Family
	Mobile Home
	Town Home
	Duplex
	A-Frame
X	Wood Frame

Building Style: LOG

Yr Built	Remodeled
0	0

Condition: Good

Room List

	Basement
	1st Floor
	2nd Floor
	Bedrooms

(1) Exterior

	Wood/Shingle
X	Aluminum/Vinyl
	Brick
X	Insulation

(2) Windows

X	Many		Large
	Avg.	X	Avg.
	Few		Small

	Wood Sash
	Metal Sash
X	Vinyl Sash
	Double Hung
	Horiz. Slide
	Casement
	Double Glass
	Patio Doors
X	Storms & Screens

(3) Roof

X	Gable		Gambrel
	Hip		Mansard
	Flat		Shed
X	Asphalt Shingle		

Chimney:

(3) Roof (cont.)

	Eavestrough
X	Insulation
0	Front Overhang
0	Other Overhang

(4) Interior

X	Drywall		Plaster
	Paneled		Wood T&G

Trim & Decoration

	Ex	X	Ord		Min

Size of Closets

	Lg	X	Ord		Small

Doors:		Solid	X	H.C.	

(5) Floors

Kitchen:
Other: Linoleum
Other: Carpeted

(6) Ceilings

X	Drywall		

(7) Excavation

Basement: 0 S.F.
Crawl: 952 S.F.
Slab: 0 S.F.
Height to Joists: 0.0

(8) Basement

	Conc. Block
	Poured Conc.
	Stone
	Treated Wood
	Concrete Floor

(9) Basement Finish

	Recreation SF
	Living SF
	Walkout Doors (B)
	No Floor SF
	Walkout Doors (A)

(10) Floor Support

Joists:
Unsupported Len:
Cntr.Sup:

(11) Heating/Cooling

X	Gas		Oil		Elec.
	Wood		Coal		Steam

	Forced Air w/o Ducts
X	Forced Air w/ Ducts
	Forced Hot Water
	Electric Baseboard
	Elec. Ceil. Radiant
	Radiant (in-floor)
	Electric Wall Heat
	Space Heater
	Wall/Floor Furnace
	Forced Heat & Cool
	Heat Pump
	No Heating/Cooling

	Central Air
	Wood Furnace

(12) Electric

150	Amps Service

No./Qual. of Fixtures

	Ex.	X	Ord.		Min

No. of Elec. Outlets

	Many	X	Ave.		Few

(13) Plumbing

	Average Fixture(s)
1	3 Fixture Bath
	2 Fixture Bath
	Softener, Auto
	Softener, Manual
	Solar Water Heat
	No Plumbing
	Extra Toilet
	Extra Sink
	Separate Shower
	Ceramic Tile Floor
	Ceramic Tile Wains
	Ceramic Tub Alcove
	Vent Fan

(14) Water/Sewer

	Public Water
	Public Sewer
1	Water Well
1	1000 Gal Septic
	2000 Gal Septic

Lump Sum Items:

(15) Built-ins

	Appliance Allow.
	Cook Top
	Dishwasher
	Garbage Disposal
	Bath Heater
	Vent Fan
	Hot Tub
	Unvented Hood
	Vented Hood
	Intercom
	Jacuzzi Tub
	Jacuzzi repl.Tub
	Oven
	Microwave
	Standard Range
	Self Clean Range
	Sauna
	Trash Compactor
	Central Vacuum
	Security System

(15) Fireplaces

	Interior 1 Story
	Interior 2 Story
	2nd/Same Stack
	Two Sided
	Exterior 1 Story
	Exterior 2 Story
	Prefab 1 Story
	Prefab 2 Story
	Heat Circulator
	Raised Hearth
	Wood Stove
	Direct-Vented Gas

Class: CD
Effec. Age: 6
Floor Area: 952
Total Base New : 139,576 E.C.F.
Total Depr Cost: 131,201 X 1.297
Estimated T.C.V: 170,168

(16) Porches/Decks

Area	Type
224	WCP (1 Story)

(17) Garage

Year Built:
Car Capacity:
Class:
Exterior:
Brick Ven.:
Stone Ven.:
Common Wall:
Foundation:
Finished ?:
Auto. Doors:
Mech. Doors:
Area:
% Good:
Storage Area:
No Conc. Floor:

Bsmnt Garage:

Carport Area:
Roof:

Cost Est. for Res. Bldg: 1 Single Family LOG Cls CD Blt 0
(11) Heating System: Forced Air w/ Ducts
Ground Area = 952 SF Floor Area = 952 SF.
Phy/Ab.Phy/Func/Econ/Comb. % Good=94/100/100/100/94
Building Areas

Stories	Exterior	Foundation	Size	Cost New	Depr. Cost
1 Story	Pine Logs	Crawl Space	952		
		Total:		118,089	111,003
Other Additions/Adjustments					
Water/Sewer					
1000 Gal Septic			1	4,582	4,307
Water Well, 100 Feet			1	5,680	5,339
Porches					
WCP (1 Story)			224	7,762	7,296
Local Cost Items					
SHED			360	2,808	2,640
SHED #2			84	655	616
		Totals:		139,576	131,201

Notes:

ECF (RESIDENTIAL) 1.297 => TCV: 170,168

*** Information herein deemed reliable but not guaranteed***

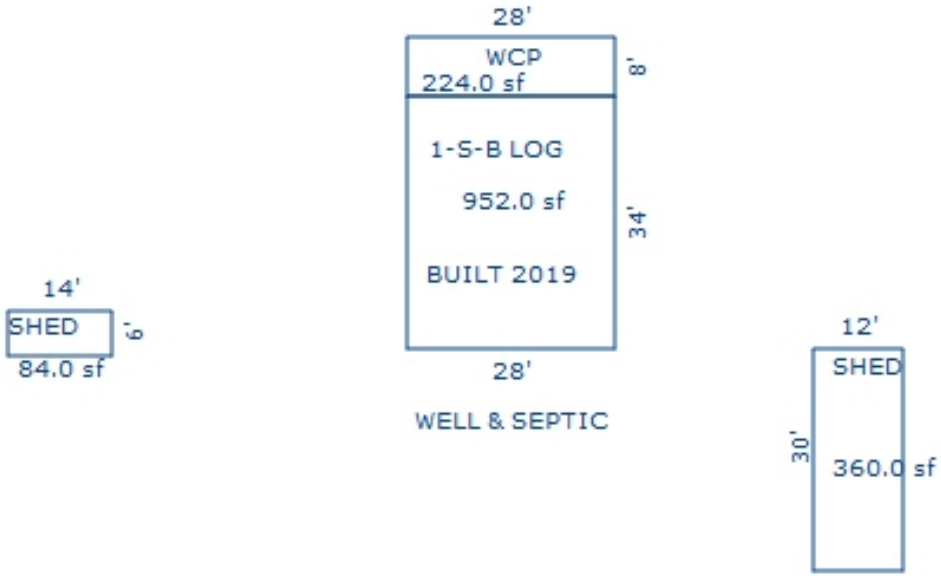

Sketch by Apex Sketch

*** Information herein deemed reliable but not guaranteed***

Parcel Number: 2410-27-2101 Jurisdiction: GREENWOOD TWP County: WEXFORD Printed on 02/15/2024

Grantor	Grantee	Sale Price	Sale Date	Inst. Type	Terms of Sale	Liber & Page	Verified By	Prcnt. Trans.
WIELENGA, PHILLIP E.	WIELENGA FAMILY TRUST	0	03/02/2022	QC	14-INTO/OUT OF TRUST	692/988	DEED	0.0
O'BRIEN, JOHN M.	WIELENGA, PHILLIP E.	38,000	06/10/1994	LC	03-ARM'S LENGTH	339:749	DEED	0.0

Property Address

Owner's Name/Address

WIELENGA FAMILY TRUST
4406 SCHARMAN RD
TRAVERSE CITY MI 49686

Tax Description

W 1/2 OF NW 1/4 80 A. GW. SEC. 27 T24N R10W -MANTON-

Comments/Influences

Class: RESIDENTIAL-VACANT Zoning:

School: MANTON CONSOLIDATED SCHOOLS

P.R.E. 0%

:

2024 Est TCV 196,616

Building Permit(s)	Date	Number	Status

	Improved	X	Vacant

	Public Improvements
	Dirt Road
X	Gravel Road
X	Paved Road
	Storm Sewer
	Sidewalk
	Water
	Sewer
X	Electric
	Gas
	Curb
	Street Lights
	Standard Utilities
	Underground Utils.

	Topography of Site
X	Level
	Rolling
	Low
	High
	Landscaped
	Swamp
	Wooded
	Pond
	Waterfront
	Ravine
	Wetland
	Flood Plain
X	PINES

Who	When	What
GLA	07/10/2019	INSPECTION
GLA	07/10/2019	INSPECTION

Land Value Estimates for Land Table 4010.LAND VALUES

Description	Frontage	Depth	* Factors * Front	Depth	Rate	%Adj.	Reason	Value
ACREAGE			77.040 Acres		2,552	100		196,616
ROW			2.960 Acres		0	100		0
			80.00 Total Acres		Total Est. Land Value =			196,616

Year	Land Value	Building Value	Assessed Value	Board of Review	Tribunal/ Other	Taxable Value
2024	98,300	0	98,300			33,638C
2023	84,200	0	84,200			32,037C
2022	65,500	0	65,500			30,512C
2021	60,100	0	60,100			29,538C

The Equalizer. Copyright (c) 1999 - 2009.
Licensed To: Township of Greenwood, County of Wexford, Michigan

*** Information herein deemed reliable but not guaranteed***

Parcel Number: 2410-27-2102 Jurisdiction: GREENWOOD TWP County: WEXFORD Printed on 02/15/2024

Grantor	Grantee	Sale Price	Sale Date	Inst. Type	Terms of Sale	Liber & Page	Verified By	Prcnt. Trans.
DELANEY, PATRICK M	DELANEY, PATRICK M TRUST	0	06/16/2016	WD	14-INTO/OUT OF TRUST	6789/8	DEED	0.0
MARSHALL, JOSEPH E	DELANEY, PATRICK	110,000	09/26/2005	WD	03-ARM'S LENGTH	578:1400	DEED	0.0
DUTCHMAN PROPERTIES LLC	MARSHALL, JOSEPH & MICHELI	24,900	09/23/2005	WD	08-ESTATE	578:1398	DEED	0.0

Property Address

3384 E 10 RD

Owner's Name/Address

DELANEY, PATRICK M TRUST
3384 E 10 RD
MANTON MI 49663

Tax Description

N 550 FT OF E 1/2 OF E 1/2 OF NE 1/4 OF NW 1/4 SUB TO EASMT 4.16 A M/L GW. SEC. 27 T24N R10W -MANTON- [[ASSESSED W/27-1101 '04

Comments/Influences

Default Comments

The Equalizer. Copyright (c) 1999 - 2009. Licensed To: Township of Greenwood, County of Wexford, Michigan

Class: RESIDENTIAL-IMPROV Zoning:
School: MANTON CONSOLIDATED SCHOOLS
P.R.E. 100% / /
:
2024 Est TCV 173,839 TCV/TFA: 257.16

Building Permit(s)	Date	Number	Status
RESIDENTIAL - REMODEL	08/01/2007	PM9739	
RESIDENTIAL - REMODEL	06/26/2006	PE17540	
RESIDENTIAL - REMODEL	03/27/2006	PB13071	
RESIDENTIAL - NEW	09/26/2005	PM8652	

X Improved | Vacant

Public Improvements

- Dirt Road
- X Gravel Road
- Paved Road
- Storm Sewer
- Sidewalk
- Water
- Sewer
- X Electric
- Gas
- Curb
- Street Lights
- Standard Utilities
- Underground Utils.

Topography of Site

- X Level
- X Rolling
- Low
- High
- Landscaped
- Swamp
- Wooded
- Pond
- Waterfront
- Ravine
- Wetland
- Flood Plain
- X OPEN/PINES

Who	When	What
GLA	07/10/2019	INSPECTION
GLA	07/10/2019	INSPECTION
LM	10/21/2010	INSPECTED

Land Value Estimates for Land Table 4010.LAND VALUES

Description	Frontage	Depth	* Factors * Front	Depth	Rate	%Adj.	Reason	Value
ACREAGE			3.920 Acres		5,062	100		19,841
ROW			0.240 Acres		0	100		0
			4.16 Total Acres		Total Est. Land Value =			19,841

Land Improvement Cost Estimates

Description	Rate	Size	% Good	Cash Value
D/W/P: 3.5 Concrete	5.82	328	81	1,546
Total Estimated Land Improvements True Cash Value =				1,546

Year	Land Value	Building Value	Assessed Value	Board of Review	Tribunal/ Other	Taxable Value
2024	9,900	77,000	86,900			52,114C
2023	9,200	62,800	72,000			49,633C
2022	7,000	53,000	60,000			47,270C
2021	8,200	53,500	61,700			45,760C

*** Information herein deemed reliable but not guaranteed***

Building Type

X	Single Family
	Mobile Home
	Town Home
	Duplex
	A-Frame
X	Wood Frame

Building Style: PLAIN

Yr Built	Remodeled
2005	0

Condition: Average

Room List

	Basement
	1st Floor
	2nd Floor
	Bedrooms

(1) Exterior

	Wood/Shingle
	Aluminum/Vinyl
	Brick
X	Vinyl
	Insulation

(2) Windows

X	Many Avg. Few	X	Large Avg. Small

	Wood Sash
	Metal Sash
X	Vinyl Sash
X	Double Hung
	Horiz. Slide
	Casement
	Double Glass
	Patio Doors
X	Storms & Screens

(3) Roof

X	Gable		Gambrel
	Hip		Mansard
	Flat		Shed

X	Asphalt Shingle

Chimney:

(3) Roof (cont.)

	Eavestrough
	Insulation
0	Front Overhang
0	Other Overhang

(4) Interior

	Drywall Paneled		Plaster Wood T&G

Trim & Decoration

	Ex		Ord		Min

Size of Closets

	Lg		Ord		Small

Doors:		Solid		H.C.	

(5) Floors

Kitchen:
Other:
Other:

(6) Ceilings

(7) Excavation

Basement: 676 S.F.
Crawl: 0 S.F.
Slab: 0 S.F.
Height to Joists: 0.0

(8) Basement

	Conc. Block
	Poured Conc.
	Stone
	Treated Wood
	Concrete Floor

(9) Basement Finish

	Recreation SF
	Living SF
	Walkout Doors (B)
	No Floor SF
	Walkout Doors (A)

(10) Floor Support

Joists:
Unsupported Len:
Cntr.Sup:

(11) Heating/Cooling

X	Gas		Oil		Elec.
	Wood		Coal		Steam

	Forced Air w/o Ducts
X	Forced Air w/ Ducts
	Forced Hot Water
	Electric Baseboard
	Elec. Ceil. Radiant
	Radiant (in-floor)
	Electric Wall Heat
	Space Heater
	Wall/Floor Furnace
	Forced Heat & Cool
	Heat Pump
	No Heating/Cooling

X	Central Air
	Wood Furnace

(12) Electric

0	Amps Service

No./Qual. of Fixtures

	Ex.		Ord.		Min

No. of Elec. Outlets

	Many		Ave.		Few

(13) Plumbing

1	Average Fixture(s)
	3 Fixture Bath
	2 Fixture Bath
	Softener, Auto
	Softener, Manual
	Solar Water Heat
	No Plumbing
	Extra Toilet
	Extra Sink
	Separate Shower
	Ceramic Tile Floor
	Ceramic Tile Wains
	Ceramic Tub Alcove
	Vent Fan

(14) Water/Sewer

	Public Water
	Public Sewer
1	Water Well
1	1000 Gal Septic
	2000 Gal Septic

Lump Sum Items:

(15) Built-ins

	Appliance Allow.
	Cook Top
	Dishwasher
	Garbage Disposal
	Bath Heater
	Vent Fan
	Hot Tub
	Unvented Hood
	Vented Hood
	Intercom
	Jacuzzi Tub
	Jacuzzi repl.Tub
	Oven
	Microwave
	Standard Range
	Self Clean Range
	Sauna
	Trash Compactor
	Central Vacuum
	Security System

(15) Fireplaces

	Interior 1 Story
	Interior 2 Story
	2nd/Same Stack
	Two Sided
	Exterior 1 Story
	Exterior 2 Story
	Prefab 1 Story
	Prefab 2 Story
	Heat Circulator
	Raised Hearth
	Wood Stove
	Direct-Vented Gas

Class: CD
Effec. Age: 19
Floor Area: 676
Total Base New : 145,114 E.C.F.
Total Depr Cost: 117,542 X 1.297
Estimated T.C.V: 152,452

(16) Porches/Decks

Area	Type
156	Treated Wood
24	Treated Wood

(17) Garage

Year Built:
Car Capacity:
Class: CD
Exterior: Siding
Brick Ven.: 0
Stone Ven.: 0
Common Wall: Detache
Foundation: 42 Inch
Finished ?:
Auto. Doors: 0
Mech. Doors: 0
Area: 576
% Good: 0
Storage Area: 0
No Conc. Floor: 0

Bsmnt Garage:

Carport Area:
Roof:

Cost Est. for Res. Bldg: 1 Single Family PLAIN Cls CD Blt 2005
(11) Heating System: Forced Air w/ Ducts , Air Conditioning
Ground Area = 676 SF Floor Area = 676 SF.
Phy/Ab.Phy/Func/Econ/Comb. % Good=81/100/100/100/81
Building Areas

Stories	Exterior	Foundation	Size	Cost New	Depr. Cost
1 Story	Siding	Basement	338		
1+ Story	Siding	Basement	338		
			Total:	105,407	85,379

Other Additions/Adjustments

Water/Sewer			
1000 Gal Septic	1	4,582	3,711
Water Well, 100 Feet	1	5,680	4,601
Deck			
Treated Wood w/Roof (Deck Portion)	156	3,465	2,807
Treated Wood w/Roof (Roof portion)	156	2,498	2,023
Treated Wood	24	1,081	876
Garages			
Class: CD Exterior: Siding Foundation: 42 Inch (Unfinished)			
Base Cost	576	22,401	18,145
	Totals:	145,114	117,542

Notes:

ECF (RESIDENTIAL) 1.297 => TCV: 152,452

*** Information herein deemed reliable but not guaranteed***

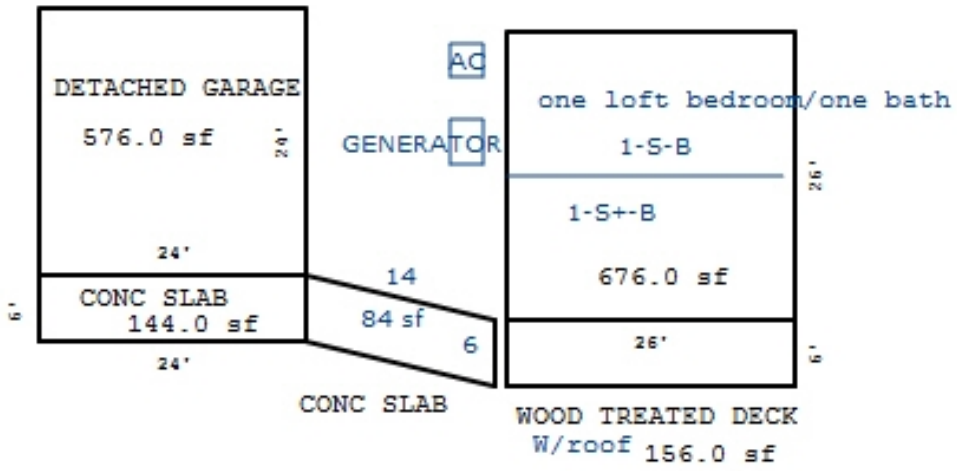

Sketch by Apex Sketch

*** Information herein deemed reliable but not guaranteed***

Parcel Number: 2410-27-2103-01 Jurisdiction: GREENWOOD TWP County: WEXFORD Printed on 02/15/2024

Grantor	Grantee	Sale Price	Sale Date	Inst. Type	Terms of Sale	Liber & Page	Verified By	Prcnt. Trans.
MARSHALL, JOSEPH & MICHELL	WILLIS SHAWN K	119,400	02/12/2016	WD	03-ARM'S LENGTH	676 /2697	DEED	100.0

Property Address

3362 E 10 RD

Owner's Name/Address

WILLIS SHAWN K
3362 E 10 RD
MANTON MI 49663

Tax Description

W 1/2 OF E 1/2 OF NE 1/4 OF NW 1/4 & E 1/2 OF E 1/2 OF NE 1/4 OF NW 1/4 EXC N 550 FT THEREOF 15.83 A M/L-- GW SEC 27 T24N R10W -MANTON-COMB ON 08/16/2010 FROM 2410-27-2103, 2410-27-2104;

Comments/Influences

Split/Comb. on 08/16/2010 completed / / deb ;
Parent Parcel(s): 2410-27-2103, 2410-27-2104;
Child Parcel(s): 2410-27-2103-01;

The Equalizer. Copyright (c) 1999 - 2009.
Licensed To: Township of Greenwood, County of Wexford, Michigan

Class: RESIDENTIAL-IMPROV Zoning:
School: MANTON CONSOLIDATED SCHOOLS
P.R.E. 100% 04/13/2016
:
2024 Est TCV 211,062 TCV/TFA: 102.86

Building Permit(s)	Date	Number	Status

X Improved | Vacant

	Public Improvements
	Dirt Road
	Gravel Road
	Paved Road
	Storm Sewer
	Sidewalk
	Water
	Sewer
X	Electric
	Gas
	Curb
	Street Lights
	Standard Utilities
	Underground Utils.

	Topography of Site
	Level
X	Rolling
	Low
	High
	Landscaped
	Swamp
X	Wooded
	Pond
	Waterfront
	Ravine
	Wetland
	Flood Plain
X	OPEN/PINES

Who	When	What
GLA	07/10/2019	INSPECTION
GLA	07/10/2019	INSPECTION

Land Value Estimates for Land Table 4010.LAND VALUES

Description	Frontage	Depth	* Factors * Front	Depth	Rate	%Adj.	Reason	Value
ACREAGE			15.590 Acres		3,200	100		49,888
ROW			0.240 Acres		0	100		0
			15.83 Total Acres		Total Est. Land Value =			49,888

Year	Land Value	Building Value	Assessed Value	Board of Review	Tribunal/ Other	Taxable Value
2024	24,900	80,600	105,500			65,072C
2023	20,300	66,900	87,200			61,974C
2022	17,800	58,300	76,100			59,023C
2021	18,200	51,300	69,500			57,138C

*** Information herein deemed reliable but not guaranteed***

Building Type

	Single Family
X	Mobile Home
	Town Home
	Duplex
	A-Frame

X	Wood Frame

Building Style: SWT/DWT

Yr Built	Remodeled
2009	0

Condition: Good

Room List

	Basement
	1st Floor
	2nd Floor
	Bedrooms

(1) Exterior

	Wood/Shingle
X	Aluminum/Vinyl
	Brick
X	Insulation

(2) Windows

	Many		Large
X	Avg.	X	Avg.
	Few		Small

	Wood Sash
	Metal Sash
X	Vinyl Sash
	Double Hung
	Horiz. Slide
	Casement
	Double Glass
	Patio Doors
X	Storms & Screens

(3) Roof

X	Gable		Gambrel
	Hip		Mansard
	Flat		Shed

X	Asphalt Shingle

Chimney:

(3) Roof (cont.)

	Eavestrough
X	Insulation
0	Front Overhang
0	Other Overhang

(4) Interior

X	Drywall		Plaster
	Paneled		Wood T&G

Trim & Decoration

	Ex	X	Ord		Min

Size of Closets

	Lg	X	Ord		Small

Doors:		Solid	X	H.C.	

(5) Floors

Kitchen:
Other: Linoleum
Other: Carpeted

(6) Ceilings

X	Drywall		

(7) Excavation

Basement: 0 S.F.
Crawl: 0 S.F.
Slab: 0 S.F.
Height to Joists: 0.0

(8) Basement

	Conc. Block
	Poured Conc.
	Stone
	Treated Wood
	Concrete Floor

(9) Basement Finish

	Recreation SF
	Living SF
	Walkout Doors (B)
	No Floor SF
	Walkout Doors (A)

(10) Floor Support

Joists:
Unsupported Len:
Cntr.Sup:

(11) Heating/Cooling

X	Gas		Oil		Elec.
	Wood		Coal		Steam

X	Forced Warm Air
	Wall Furnace
	Warm & Cool Air
	Heat Pump

X	Central Air
	Wood Furnace

(12) Electric

150	Amps Service

No./Qual. of Fixtures

	Ex.	X	Ord.		Min

No. of Elec. Outlets

	Many	X	Ave.		Few

(13) Plumbing

	Average Fixture(s)
2	3 Fixture Bath
	2 Fixture Bath
	Softener, Auto
	Softener, Manual
	Solar Water Heat
	No Plumbing
	Extra Toilet
	Extra Sink
	Separate Shower
	Ceramic Tile Floor
	Ceramic Tile Wains
	Ceramic Tub Alcove
	Vent Fan

(14) Water/Sewer

	Public Water
	Public Sewer
1	Water Well
1	1000 Gal Septic
	2000 Gal Septic

Lump Sum Items:

(15) Built-ins

	Appliance Allow.
	Cook Top
	Dishwasher
	Garbage Disposal
	Bath Heater
	Vent Fan
	Hot Tub
	Unvented Hood
	Vented Hood
	Intercom
	Jacuzzi Tub
	Jacuzzi repl.Tub
	Oven
	Microwave
	Standard Range
	Self Clean Range
	Sauna
	Trash Compactor
	Central Vacuum
	Security System

(15) Fireplaces

	Interior 1 Story
	Interior 2 Story
	2nd/Same Stack
	Two Sided
	Exterior 1 Story
	Exterior 2 Story
	Prefab 1 Story
	Prefab 2 Story
	Heat Circulator
	Raised Hearth
	Wood Stove
	Direct-Vented Gas

Class: Good
Effec. Age: 16
Floor Area:
Total Base New : 197,250 E.C.F.
Total Depr Cost: 124,267 X 1.297
Estimated T.C.V: 161,174

(16) Porches/Decks

Area	Type
16	WPP
384	Treated Wood

(17) Garage

Year Built:
Car Capacity:
Class: BC
Exterior: Pole
Brick Ven.: 0
Stone Ven.: 0
Common Wall: Detache
Foundation: 18 Inch
Finished ?:
Auto. Doors: 0
Mech. Doors: 0
Area: 384
% Good: 0
Storage Area: 0
No Conc. Floor: 0

Bsmnt Garage:

Carport Area:
Roof:

Cost Est. for Res. Bldg: 1 Mobile Home SWT/DWT Cls Good Blt 2009
(11) Heating System: Forced Warm Air, Air Conditioning
Ground Area = 2052 SF Floor Area = 2052 SF.
Phy/Ab.Phy/Func/Econ/Comb. % Good=63/100/100/100/63
Building Areas

Type	Ext. Walls	Roof/Fnd.	Size	Cost New	Depr. Cost
Main Home	Siding	Comp.Shingle	2052		
			Total:	151,810	95,640
Other Additions/Adjustments					
Skirting, Concrete Block			206	5,043	3,177
Plumbing					
3 Fixture Bath			1	3,949	2,488
Water/Sewer					
1000 Gal Septic			1	5,676	3,576
Water Well, 100 Feet			1	6,289	3,962
Deck					
Treated Wood			384	6,781	4,272
Garages					
Class: BC Exterior: Pole (Unfinished)					
Base Cost			384	16,742	10,547
Porches					
WPP			16	960	605
			Totals:	197,250	124,267

Notes:

ECF (RESIDENTIAL) 1.297 => TCV: 161,174

*** Information herein deemed reliable but not guaranteed***

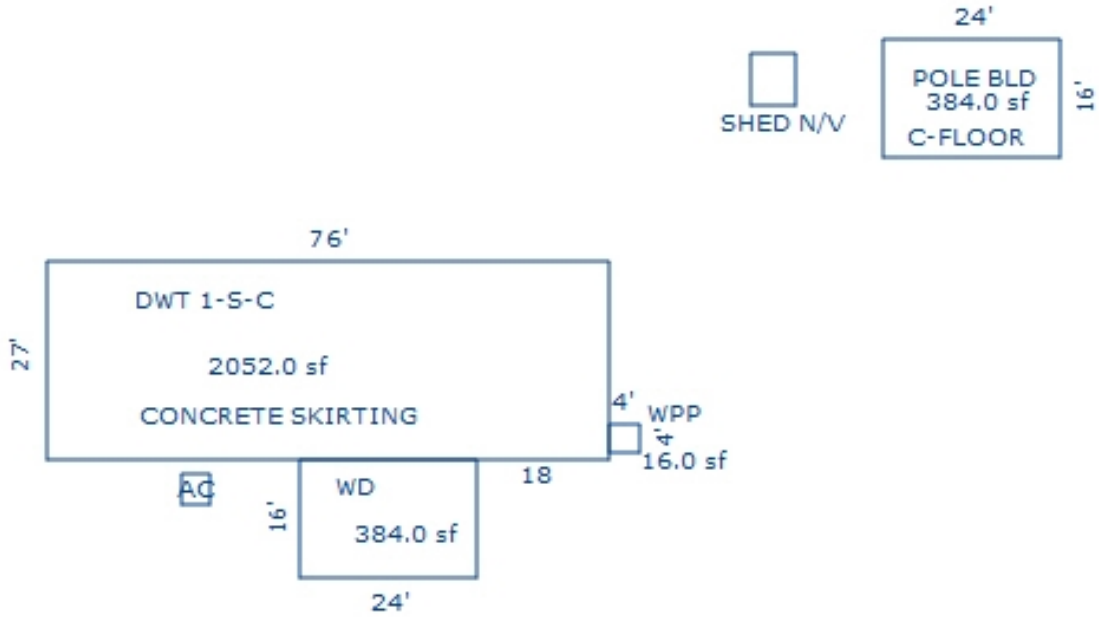

Sketch by Apex Sketch

*** Information herein deemed reliable but not guaranteed***

Parcel Number: 2410-27-2201 Jurisdiction: GREENWOOD TWP County: WEXFORD Printed on 02/15/2024

Grantor	Grantee	Sale Price	Sale Date	Inst. Type	Terms of Sale	Liber & Page	Verified By	Prcnt. Trans.
REMENAP, RANNDALL C.	REMENAP, RANDALL C LE	0	09/25/2017	WD	18-LIFE ESTATE	681/1438	DEED	0.0
BERRY, JOHN W & BONNIE	REMENAP, JOSEPH & RANDALL	0	07/19/2013	QC	09-FAMILY	661/122	DEED	25.0
REMENAP, LOUIS JOSEPH & SA	REMENAP, LOUIS JOSEPH & SA	0	03/29/2012	QC	14-INTO/OUT OF TRUST	646/2812	DEED	0.0
MANNING, GLADYS	REMENAP ET AL, RANDALL CC.	36,000	04/24/1989	WD	03-ARM'S LENGTH	315:283	DEED	0.0

Property Address

7755 N 33 RD

Owner's Name/Address

REMENAP, RANDALL C LE & JUDITH
% IKE WELLS
11700 DANTON DR
ALLENDALE MI 49401

Tax Description

NE 1/4 160 A. GW. SEC. 27 T24N R10W
-MANTON-

Comments/Influences

Class: RESIDENTIAL-IMPROV Zoning:

School: MANTON CONSOLIDATED SCHOOLS

P.R.E. 0%

:

2024 Est TCV 485,499 TCV/TFA: 474.12

Building Permit(s)	Date	Number	Status
RESIDENTIAL - REMODEL	04/04/2000	PB9555	

X	Improved	
	Vacant	

	Public Improvements
	Dirt Road
X	Gravel Road
	Paved Road
	Storm Sewer
	Sidewalk
	Water
	Sewer
X	Electric
	Gas
	Curb
	Street Lights
	Standard Utilities
	Underground Utils.

	Topography of Site
	Level
X	Rolling
	Low
	High
	Landscaped
	Swamp
	Wooded
	Pond
	Waterfront
	Ravine
	Wetland
	Flood Plain
X	OPEN/PINES

Who	When	What
GLA	07/10/2019	INSPECTION
GLA	07/10/2019	INSPECTION
GLA	08/03/2014	INSPECTION

Land Value Estimates for Land Table 4010.LAND VALUES

Description	Frontage	Depth	* Factors * Front	Depth	Rate	%Adj.	Reason	Value
ACREAGE			156.000 Acres		2,480	100		386,880
ROW			4.000 Acres		0	100		0
			160.00 Total Acres		Total Est. Land Value =			386,880

Year	Land Value	Building Value	Assessed Value	Board of Review	Tribunal/ Other	Taxable Value
2024	193,400	49,300	242,700			98,833C
2023	148,200	40,500	188,700			94,127C
2022	132,600	34,300	166,900			89,645C
2021	117,000	34,900	151,900			86,782C

The Equalizer. Copyright (c) 1999 - 2009.
Licensed To: Township of Greenwood, County of Wexford, Michigan

*** Information herein deemed reliable but not guaranteed***

Building Type

X	Single Family
	Mobile Home
	Town Home
	Duplex
	A-Frame
X	Wood Frame

Building Style: PLAIN

Yr Built	Remodeled
0	0

Condition: Good

Room List

	Basement
	1st Floor
	2nd Floor
	Bedrooms

(1) Exterior

	Wood/Shingle
X	Aluminum/Vinyl
	Brick
X	Insulation

(2) Windows

	Many		Large
X	Avg.	X	Avg.
	Few		Small

	Wood Sash
	Metal Sash
X	Vinyl Sash
	Double Hung
	Horiz. Slide
	Casement
	Double Glass
	Patio Doors
X	Storms & Screens

(3) Roof

X	Gable		Gambrel
	Hip		Mansard
	Flat		Shed

X	Asphalt Shingle

Chimney:

(3) Roof (cont.)

	Eavestrough
X	Insulation
0	Front Overhang
0	Other Overhang

(4) Interior

X	Drywall		Plaster
	Paneled		Wood T&G

Trim & Decoration

	Ex	X	Ord		Min

Size of Closets

	Lg	X	Ord		Small

Doors:		Solid	X	H.C.	

(5) Floors

Kitchen:
Other: Linoleum
Other: Carpeted

(6) Ceilings

X	Drywall		

(7) Excavation

Basement: 0 S.F.
Crawl: 0 S.F.
Slab: 1024 S.F.
Height to Joists: 0.0

(8) Basement

	Conc. Block
	Poured Conc.
	Stone
	Treated Wood
	Concrete Floor

(9) Basement Finish

	Recreation SF
	Living SF
	Walkout Doors (B)
	No Floor SF
	Walkout Doors (A)

(10) Floor Support

Joists:
Unsupported Len:
Cntr.Sup:

(11) Heating/Cooling

X	Gas		Oil		Elec.
	Wood		Coal		Steam

	Forced Air w/o Ducts
X	Forced Air w/ Ducts
	Forced Hot Water
	Electric Baseboard
	Elec. Ceil. Radiant
	Radiant (in-floor)
	Electric Wall Heat
	Space Heater
	Wall/Floor Furnace
	Forced Heat & Cool
	Heat Pump
	No Heating/Cooling

	Central Air
	Wood Furnace

(12) Electric

150	Amps Service

No./Qual. of Fixtures

	Ex.	X	Ord.		Min

No. of Elec. Outlets

	Many	X	Ave.		Few

(13) Plumbing

	Average Fixture(s)
1	3 Fixture Bath
	2 Fixture Bath
	Softener, Auto
	Softener, Manual
	Solar Water Heat
	No Plumbing
	Extra Toilet
	Extra Sink
	Separate Shower
	Ceramic Tile Floor
	Ceramic Tile Wains
	Ceramic Tub Alcove
	Vent Fan

(14) Water/Sewer

	Public Water
	Public Sewer
1	Water Well
1	1000 Gal Septic
	2000 Gal Septic

Lump Sum Items:

(15) Built-ins

	Appliance Allow.
	Cook Top
	Dishwasher
	Garbage Disposal
	Bath Heater
	Vent Fan
	Hot Tub
	Unvented Hood
	Vented Hood
	Intercom
	Jacuzzi Tub
	Jacuzzi repl.Tub
	Oven
	Microwave
	Standard Range
	Self Clean Range
	Sauna
	Trash Compactor
	Central Vacuum
	Security System

(15) Fireplaces

	Interior 1 Story
	Interior 2 Story
	2nd/Same Stack
	Two Sided
	Exterior 1 Story
	Exterior 2 Story
	Prefab 1 Story
	Prefab 2 Story
	Heat Circulator
	Raised Hearth
	Wood Stove
	Direct-Vented Gas

Class: CD
Effec. Age: 49
Floor Area: 1,024
Total Base New : 149,091 E.C.F.
Total Depr Cost: 76,036 X 1.297
Estimated T.C.V: 98,619

(16) Porches/Decks

Area	Type
120	WPP

(17) Garage

Year Built:
Car Capacity:
Class: CD
Exterior: Pole
Brick Ven.: 0
Stone Ven.: 0
Common Wall: Detache
Foundation: 18 Inch
Finished ?:
Auto. Doors: 0
Mech. Doors: 0
Area: 768
% Good: 0
Storage Area: 0
No Conc. Floor: 0

Bsmnt Garage:

Carport Area:
Roof:

Cost Est. for Res. Bldg: 1 Single Family PLAIN Cls CD Blt 0
(11) Heating System: Forced Air w/ Ducts
Ground Area = 1024 SF Floor Area = 1024 SF.
Phy/Ab.Phy/Func/Econ/Comb. % Good=51/100/100/100/51
Building Areas

Stories	Exterior	Foundation	Size	Cost New	Depr. Cost
1 Story	Siding	Slab	1,024		
			Total:	117,465	59,906
Other Additions/Adjustments					
Water/Sewer					
1000 Gal Septic			1	4,582	2,337
Water Well, 100 Feet			1	5,680	2,897
Porches					
WPP			120	2,970	1,515
Garages					
Class: CD Exterior: Pole (Unfinished)					
Base Cost			768	18,394	9,381
			Totals:	149,091	76,036

Notes:
ECF (RESIDENTIAL) 1.297 => TCV: 98,619

*** Information herein deemed reliable but not guaranteed***

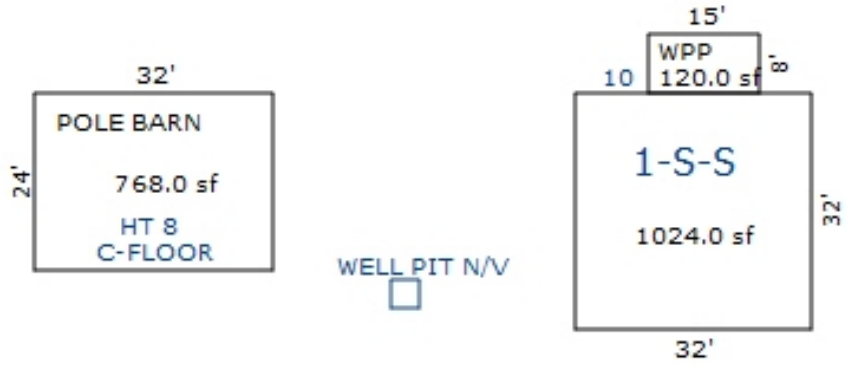

Sketch by Apex Sketch

*** Information herein deemed reliable but not guaranteed***

Parcel Number: 2410-27-2401 Jurisdiction: GREENWOOD TWP County: WEXFORD Printed on 02/15/2024

Grantor	Grantee	Sale Price	Sale Date	Inst. Type	Terms of Sale	Liber & Page	Verified By	Prcnt. Trans.
REMENAP, RANNDALL C.	REMENAP, RANDALL C LE	0	09/25/2017	PTA	18-LIFE ESTATE		DEED	0.0
BERRY, JOHN W & BONNIE	REMENAP, RANDALL ETAL	0	07/19/2013	QC	09-FAMILY	661/122	DEED	0.0
REMENAP, JOSEPH L & SANDRA	REMENAP, JOSEPH L & SANDRA	0	03/29/2012	QC	14-INTO/OUT OF TRUST	646/2812	DEED	0.0
STATE OF MICHIGAN	REMENAP, JOSEPH ETAL	40,503	10/21/1999	QC	09-FAMILY	374:719	DEED	0.0

Property Address

Owner's Name/Address

REMENAP, RANDALL C & JUDITH LE
C/O IKE WELLS
11700 DANTON DR
ALLENDALE MI 49401

Tax Description

SE 1/4 OF NW 1/4 40 A. GW. SEC. 27 T24N R10W -MANTON-

Comments/Influences

Class: RESIDENTIAL-VACANT Zoning:

School: MANTON CONSOLIDATED SCHOOLS

P.R.E. 0%

:

2024 Est TCV 108,880

Building Permit(s)	Date	Number	Status

	Improved	X	Vacant

	Public Improvements
	Dirt Road
	Gravel Road
	Paved Road
	Storm Sewer
	Sidewalk
	Water
	Sewer
X	Electric
	Gas
	Curb
	Street Lights
	Standard Utilities
	Underground Utils.

	Topography of Site
	Level
X	Rolling
	Low
	High
	Landscaped
	Swamp
X	Wooded
	Pond
	Waterfront
	Ravine
	Wetland
	Flood Plain
X	OPEN/PINES

Who	When	What
GLA	07/10/2019	INSPECTION
GLA	07/10/2019	INSPECTION

Land Value Estimates for Land Table 4010.LAND VALUES

Description	Frontage	Depth	* Factors * Front	Depth	Rate	%Adj.	Reason	Value
ACREAGE			40.000 Acres		2,722	100		108,880
			40.00 Total Acres		Total Est. Land Value =			108,880

Year	Land Value	Building Value	Assessed Value	Board of Review	Tribunal/ Other	Taxable Value
2024	54,400	0	54,400			27,798C
2023	48,000	0	48,000			26,475C
2022	38,000	0	38,000			25,215C
2021	34,000	0	34,000			24,410C

The Equalizer. Copyright (c) 1999 - 2009.
Licensed To: Township of Greenwood, County of Wexford, Michigan

*** Information herein deemed reliable but not guaranteed***

Parcel Number: 2410-27-3101 Jurisdiction: GREENWOOD TWP County: WEXFORD Printed on 02/15/2024

Grantor	Grantee	Sale Price	Sale Date	Inst. Type	Terms of Sale	Liber & Page	Verified By	Prcnt. Trans.
STALEY, CHARLES P.	BEACH, FRED & DONNA	8,900	05/14/1997	LC	03-ARM'S LENGTH	354:679	DEED	0.0
KALCHER, MARGARET	STALEY, CHARLES P.	64,000	09/10/1996	WD	03-ARM'S LENGTH	351:298	DEED	0.0

Property Address

Class: RESIDENTIAL-VACANT Zoning:

School: MANTON CONSOLIDATED SCHOOLS

P.R.E. 0%

:

2024 Est TCV 13,441

Building Permit(s)	Date	Number	Status

Owner's Name/Address

BEACH, FRED A.
& DONNA J.
81759 29TH ST
LAWTON MI 49065

	Improved	X	Vacant

	Public Improvements
	Dirt Road
	Gravel Road
X	Paved Road
	Storm Sewer
	Sidewalk
	Water
	Sewer
X	Electric
	Gas
	Curb
	Street Lights
	Standard Utilities
	Underground Utils.

	Topography of Site
	Level
X	Rolling
	Low
	High
	Landscaped
	Swamp
	Wooded
	Pond
	Waterfront
	Ravine
	Wetland
	Flood Plain
X	OPEN/PINES

Land Value Estimates for Land Table 4010.LAND VALUES

Description	Frontage	Depth	* Factors * Front	Depth	Rate	%Adj.	Reason	Value
ACREAGE			1.780 Acres		7,551	100		13,441
ROW			0.170 Acres		0	100		0
			1.95 Total Acres		Total Est. Land Value =			13,441

Tax Description

PARCEL "A" DESC AS COM AT W 1/4 COR OF SEC; TH S 232.81 FT; TH E 365.77 FT; TH N 232.81 FT; TH W 365.77 FT TO POB; SUB TO & TOG WITH EASMNT. --1.95 A. GW. SEC. 27 T24N R10W -MANTON-

Comments/Influences

Who	When	What
GLA	07/10/2019	INSPECTION
GLA	07/10/2019	INSPECTION

Year	Land Value	Building Value	Assessed Value	Board of Review	Tribunal/ Other	Taxable Value
2024	6,700	0	6,700			3,507C
2023	5,100	0	5,100			3,340C
2022	4,200	0	4,200			3,181C
2021	4,700	0	4,700			3,080C

The Equalizer. Copyright (c) 1999 - 2009.
Licensed To: Township of Greenwood, County of Wexford, Michigan

*** Information herein deemed reliable but not guaranteed***

Parcel Number: 2410-27-3102 Jurisdiction: GREENWOOD TWP County: WEXFORD Printed on 02/15/2024

Grantor	Grantee	Sale Price	Sale Date	Inst. Type	Terms of Sale	Liber & Page	Verified By	Prcnt. Trans.
BLACK, SCOTT & MISSTY	SCHOENDORF, RICHARD	4,000	09/14/2021	QC	03-ARM'S LENGTH	691/214	DEED	100.0
MURPHY, ROTHA C. ETAL	BLACK, SCOTT & MISSTY	4,000	02/07/2020	WD	03-ARM'S LENGTH	686 /2393	DEED	100.0
STALEY ESTATE	FORMAN CINDRA F ETAL	0	08/15/2014	WD	16-LC PAYOFF	669;2069-2070	DEED	0.0
STALEY, CHARLES P ESTATE	MURPHY, ROTHA C. ETAL	0	07/15/2014	WD	16-LC PAYOFF	669/2069	DEED	0.0

Property Address

Owner's Name/Address

SCHOENDORF, RICHARD
21618 W COUNTY LINE RD
AUGUSTA MI 49012

Tax Description

PARCEL "B" DESC AS COM AT W 1/4 COR OF SEC; TH S 232.81 FT TO POB: TH CON'T S 277.13 FT; TH N 74D27'38" E 379.21 FT; TH N 188.48 FT; TH W 365.77 FT TO POB. SUB TO & TOG WITH EASMNT 1.95 A. GW. SEC. 27 T24N R10W -MANTON-

Comments/Influences

Class: RESIDENTIAL-VACANT Zoning:

School: MANTON CONSOLIDATED SCHOOLS

P.R.E. 0%

:

2024 Est TCV 15,992

Building Permit(s)	Date	Number	Status

	Improved	X	Vacant

	Public Improvements
	Dirt Road
	Gravel Road
X	Paved Road
	Storm Sewer
	Sidewalk
	Water
	Sewer
X	Electric
	Gas
	Curb
	Street Lights
	Standard Utilities
	Underground Utils.

	Topography of Site
	Level
X	Rolling
	Low
	High
	Landscaped
	Swamp
X	Wooded
	Pond
	Waterfront
	Ravine
	Wetland
	Flood Plain

Who	When	What
GLA	10/31/2022	INSPECTION
GLA	07/10/2019	INSPECTION
GLA	07/10/2019	INSPECTION

Land Value Estimates for Land Table 4010.LAND VALUES

Description	Frontage	Depth	* Factors * Front	Depth	Rate	%Adj.	Reason	Value
ACREAGE			1.460 Acres		10,953	100		15,992
ROW			0.490 Acres		0	100		0
			1.95 Total Acres		Total Est. Land Value =			15,992

Year	Land Value	Building Value	Assessed Value	Board of Review	Tribunal/ Other	Taxable Value
2024	8,000	0	8,000			4,079C
2023	4,400	0	4,400			3,885C
2022	3,700	0	3,700			3,700S
2021	4,400	0	4,400			4,400S

The Equalizer. Copyright (c) 1999 - 2009.
Licensed To: Township of Greenwood, County of Wexford, Michigan

*** Information herein deemed reliable but not guaranteed***

Parcel Number: 2410-27-3103 Jurisdiction: GREENWOOD TWP County: WEXFORD Printed on 02/15/2024

Grantor	Grantee	Sale Price	Sale Date	Inst. Type	Terms of Sale	Liber & Page	Verified By	Prcnt. Trans.
COUCOUVANIS, DIMITRI TRUST	COUCOUVANIS, NICHOLAS W	0	08/31/2018	QC	09-FAMILY	683 /1652	DEED	0.0
COUCOUVANIS, DIMITRI	COUCOUVANIS, DIMITRI TRUST	0	10/05/2007	WD	09-FAMILY	605/2212	DEED	0.0
STALEY, CHARLES P	COUCOUVANIS, DIMITRI	17,743	06/04/2003	WD	03-ARM'S LENGTH	493:474	DEED	0.0
STALEY, CHARLES P.	BARKER, DAN & ANN	26,900	06/21/1997	LC	03-ARM'S LENGTH	355:576	DEED	0.0

Property Address

Owner's Name/Address

COUCOUVANIS, NICHOLAS W
483 MADISON DR
SAN JOSE CA 95123

Tax Description

PARCEL "C" DESC AS COM AT W 1/4 OF SEC; TH S 509.94 FT TO POB: TH CON'T S 286.38 FT; TH E 1232.28 FT; TH N 508.70 FT; TH N 81D18'38" W 21.48 FT; TH S 54D51'40" W 294.24 FT; TH S 77D39'16" W 296.04 FT; TH N 78D27'56" W 321.10 FT; TH S 74D27'38" W 379.21 FT TO POB. SUB TO & TOG WITH EASMNT. 10.01 A. GW. SEC. 27 T24N R10W -MANTON-

Comments/Influences

Class: RESIDENTIAL-VACANT Zoning:

School: MANTON CONSOLIDATED SCHOOLS

P.R.E. 0%

:

2024 Est TCV 45,621

Building Permit(s)	Date	Number	Status

	Improved	X	Vacant

	Public Improvements
	Dirt Road
X	Gravel Road
X	Paved Road
	Storm Sewer
	Sidewalk
	Water
	Sewer
X	Electric
	Gas
	Curb
	Street Lights
	Standard Utilities
	Underground Utils.

	Topography of Site
	Level
X	Rolling
	Low
	High
	Landscaped
	Swamp
X	Wooded
	Pond
	Waterfront
	Ravine
	Wetland
	Flood Plain
X	OPEN

Who	When	What
GLA	07/10/2019	INSPECTION
GLA	07/10/2019	INSPECTION

Land Value Estimates for Land Table 4010.LAND VALUES

Description	Frontage	Depth	* Factors * Front	Depth	Rate	%Adj.	Reason	Value
ACREAGE			9.793 Acres		4,659	100		45,621
ROW			0.217 Acres		0	100		0
			10.01 Total Acres		Total Est. Land Value =			45,621

Year	Land Value	Building Value	Assessed Value	Board of Review	Tribunal/ Other	Taxable Value
2024	22,800	0	22,800			10,705C
2023	12,900	0	12,900			10,196C
2022	11,900	0	11,900			9,711C
2021	12,000	0	12,000			9,401C

The Equalizer. Copyright (c) 1999 - 2009. Licensed To: Township of Greenwood, County of Wexford, Michigan

*** Information herein deemed reliable but not guaranteed***

Parcel Number: 2410-27-3106 Jurisdiction: GREENWOOD TWP County: WEXFORD Printed on 02/15/2024

Grantor	Grantee	Sale Price	Sale Date	Inst. Type	Terms of Sale	Liber & Page	Verified By	Prcnt. Trans.
STALEY, CHARLES P.	MCGARRY, THERESA M.	20,000	07/18/1998	WD	03-ARM'S LENGTH	362:528	DEED	0.0

Property Address

Class: RESIDENTIAL-VACANT Zoning:

School: MANTON CONSOLIDATED SCHOOLS

P.R.E. 0%

:

2024 Est TCV 43,392

Building Permit(s)	Date	Number	Status

Owner's Name/Address

MCGARRY, THERESA M
1515 OSCEOLA ST
JOHNSON CITY TN 37604

	Improved	X	Vacant

Land Value Estimates for Land Table 4010.LAND VALUES

Description	Frontage	Depth	* Factors * Front	Depth	Rate	%Adj.	Reason	Value
ACREAGE			9.160 Acres		4,737	100		43,392
ROW			0.850 Acres		0	100		0
			10.01 Total Acres		Total Est. Land Value =			43,392

Public Improvements

	Dirt Road
X	Gravel Road
	Paved Road
	Storm Sewer
	Sidewalk
	Water
	Sewer
X	Electric
	Gas
	Curb
	Street Lights
	Standard Utilities
	Underground Utils.

Topography of Site

	Level
X	Rolling
	Low
	High
	Landscaped
	Swamp
X	Wooded
	Pond
	Waterfront
	Ravine
	Wetland
	Flood Plain
X	PINES

Tax Description

PARCEL "F" DESC AS COM AT W 1/4 COR OF SEC; TH E 365.77 FT TO POB: TH CON'T E 1069.90 FT; TH S 325.02 FT; TH N 81D18'38" W 227.20 FT; TH S 54D51'40" W 294.24 FT; TH S 77D39'16" W 296.04 FT; TH N 78D27'56" W 321.10 FT; TH N 421.28 FT TO POB. SUB TO & TOG WITH EASMNT. 10.01 A. GW. SEC. 27 T24N R10W -MANTON-

Comments/Influences

Who	When	What
GLA	07/10/2019	INSPECTION
GLA	07/10/2019	INSPECTION

Year	Land Value	Building Value	Assessed Value	Board of Review	Tribunal/ Other	Taxable Value
2024	21,700	0	21,700			10,823C
2023	12,700	0	12,700			10,308C
2022	11,600	0	11,600			9,818C
2021	12,000	0	12,000			9,505C

The Equalizer. Copyright (c) 1999 - 2009.
Licensed To: Township of Greenwood, County of Wexford, Michigan

*** Information herein deemed reliable but not guaranteed***

Parcel Number: 2410-27-3107 Jurisdiction: GREENWOOD TWP County: WEXFORD Printed on 02/15/2024

Grantor	Grantee	Sale Price	Sale Date	Inst. Type	Terms of Sale	Liber & Page	Verified By	Prcnt. Trans.
COUCOUVANIS, DIMITRI TRUST	COUCOUVANIS, NICHOLAS W	0	08/31/2018	QC	09-FAMILY	683 /1652	DEED	0.0
COUCOUVANIS, DIMITRI	COUCOUVANIS, DIMITRI TRUST	0	10/05/2007	WD	09-FAMILY	605/2212	DEED	0.0
STALEY, CHARLES P.	COUCUVANIS, DIMETRI	19,000	11/14/1996	WD	03-ARM'S LENGTH	352:293	DEED	0.0

Property Address

3345 GREENWOOD LN

Owner's Name/Address

COUCOUVANIS, NICHOLAS W
483 MADISON DR
SAN JOSE CA 95123

Tax Description

PARCEL "G" DESC AS COM AT W 1/4 COR OF SEC; TH E 1435.67 FT TO POB: TH CON'T E 983.23 FT; TH S 27D40'16" W 799.36 FT; TH S 81D35' 28" W 50 FT; TH N 65D19'50" W 154.86 FT; TH N 38D42'19" W 248.55 FT; TH N 59D10'42" W 147.81 FT; TH N 81D18'38" W 139.75 FT; TH N 325.02 FT TO POB. SUB TO & TOG WITH EASMNT. 10.01 A. GW. SEC. 27 T24N R10W -MANTON-

Comments/Influences

The Equalizer. Copyright (c) 1999 - 2009. Licensed To: Township of Greenwood, County of Wexford, Michigan

Class: RESIDENTIAL-IMPROV Zoning:

School: MANTON CONSOLIDATED SCHOOLS

P.R.E. 0%

:

2024 Est TCV 173,763 TCV/TFA: 278.47

Building Permit(s)	Date	Number	Status

X	Improved		Vacant

	Public Improvements
X	Dirt Road
X	Gravel Road
	Paved Road
	Storm Sewer
	Sidewalk
	Water
	Sewer
X	Electric
	Gas
	Curb
	Street Lights
	Standard Utilities
	Underground Utils.

	Topography of Site
	Level
X	Rolling
	Low
	High
	Landscaped
	Swamp
X	Wooded
	Pond
	Waterfront
	Ravine
	Wetland
	Flood Plain

Who	When	What
GLA	07/10/2019	INSPECTION
GLA	07/10/2019	INSPECTION

Land Value Estimates for Land Table 4010.LAND VALUES

Description	Frontage	Depth	* Factors * Front	Depth	Rate	%Adj.	Reason	Value
ACREAGE			9.590 Acres		4,683	100		44,906
ROW			0.420 Acres		0	100		0
			10.01 Total Acres		Total Est. Land Value =			44,906

Year	Land Value	Building Value	Assessed Value	Board of Review	Tribunal/ Other	Taxable Value
2024	22,500	64,400	86,900			54,103C
2023	12,800	52,600	65,400			51,527C
2022	11,800	44,300	56,100			49,074C
2021	12,000	44,900	56,900			47,507C

*** Information herein deemed reliable but not guaranteed***

Building Type

X	Single Family
	Mobile Home
	Town Home
	Duplex
	A-Frame
X	Wood Frame

Building Style: PLAIN

Yr Built	Remodeled
0	0

Condition: Good

Room List

	Basement
	1st Floor
	2nd Floor
	Bedrooms

(1) Exterior

	Wood/Shingle
X	Aluminum/Vinyl
	Brick
X	Insulation

(2) Windows

	Many		Large
X	Avg.	X	Avg.
	Few		Small

	Wood Sash
	Metal Sash
X	Vinyl Sash
	Double Hung
	Horiz. Slide
	Casement
	Double Glass
	Patio Doors
X	Storms & Screens

(3) Roof

X	Gable		Gambrel
	Hip		Mansard
	Flat		Shed

X	Asphalt Shingle

Chimney:

(3) Roof (cont.)

	Eavestrough
X	Insulation
0	Front Overhang
0	Other Overhang

(4) Interior

X	Drywall		Plaster
	Paneled		Wood T&G

Trim & Decoration

	Ex	X	Ord		Min

Size of Closets

	Lg	X	Ord		Small

Doors:		Solid	X	H.C.	

(5) Floors

Kitchen:
Other: Linoleum
Other: Carpeted

(6) Ceilings

X	Drywall

(7) Excavation

Basement: 624 S.F.
Crawl: 0 S.F.
Slab: 0 S.F.
Height to Joists: 0.0

(8) Basement

	Conc. Block
	Poured Conc.
	Stone
	Treated Wood
	Concrete Floor

(9) Basement Finish

	Recreation SF
	Living SF
	Walkout Doors (B)
	No Floor SF
	Walkout Doors (A)

(10) Floor Support

Joists:
Unsupported Len:
Cntr.Sup:

(11) Heating/Cooling

X	Gas		Oil		Elec.
	Wood		Coal		Steam

	Forced Air w/o Ducts
X	Forced Air w/ Ducts
	Forced Hot Water
	Electric Baseboard
	Elec. Ceil. Radiant
	Radiant (in-floor)
	Electric Wall Heat
	Space Heater
	Wall/Floor Furnace
	Forced Heat & Cool
	Heat Pump
	No Heating/Cooling

	Central Air
	Wood Furnace

(12) Electric

150	Amps Service

No./Qual. of Fixtures

	Ex.	X	Ord.		Min

No. of Elec. Outlets

	Many	X	Ave.		Few

(13) Plumbing

1	Average Fixture(s)
	3 Fixture Bath
	2 Fixture Bath
	Softener, Auto
	Softener, Manual
	Solar Water Heat
	No Plumbing
	Extra Toilet
	Extra Sink
	Separate Shower
	Ceramic Tile Floor
	Ceramic Tile Wains
	Ceramic Tub Alcove
	Vent Fan

(14) Water/Sewer

	Public Water
	Public Sewer
1	Water Well
1	1000 Gal Septic
	2000 Gal Septic

Lump Sum Items:

(15) Built-ins

	Appliance Allow.
	Cook Top
	Dishwasher
	Garbage Disposal
	Bath Heater
	Vent Fan
	Hot Tub
	Unvented Hood
	Vented Hood
	Intercom
	Jacuzzi Tub
	Jacuzzi repl.Tub
	Oven
	Microwave
	Standard Range
	Self Clean Range
	Sauna
	Trash Compactor
	Central Vacuum
	Security System

(15) Fireplaces

	Interior 1 Story
	Interior 2 Story
	2nd/Same Stack
	Two Sided
	Exterior 1 Story
	Exterior 2 Story
	Prefab 1 Story
	Prefab 2 Story
	Heat Circulator
	Raised Hearth
	Wood Stove
	Direct-Vented Gas

Class: CD
Effec. Age: 27
Floor Area: 624
Total Base New : 136,096 E.C.F.
Total Depr Cost: 99,350 X 1.297
Estimated T.C.V: 128,857

(16) Porches/Decks

Area	Type
60	WCP (1 Story)
380	WPP
48	Treated Wood

(17) Garage

Year Built:
Car Capacity:
Class: CD
Exterior: Siding
Brick Ven.: 0
Stone Ven.: 0
Common Wall: Detache
Foundation: 18 Inch
Finished ?:
Auto. Doors: 0
Mech. Doors: 0
Area: 576
% Good: 0
Storage Area: 0
No Conc. Floor: 0

Bsmnt Garage:

Carport Area:
Roof:

Cost Est. for Res. Bldg: 1 Single Family PLAIN Cls CD Blt 0
(11) Heating System: Forced Air w/ Ducts
Ground Area = 624 SF Floor Area = 624 SF.
Phy/Ab.Phy/Func/Econ/Comb. % Good=73/100/100/100/73
Building Areas

Stories	Exterior	Foundation	Size	Cost New	Depr. Cost
1+ Story	Siding	Basement	624		
			Total:	95,319	69,583
Other Additions/Adjustments					
Water/Sewer					
1000 Gal Septic			1	4,582	3,345
Water Well, 100 Feet			1	5,680	4,146
Porches					
WCP (1 Story)			60	3,197	2,334
WPP			380	5,681	4,147
Deck					
Treated Wood			48	1,702	1,242
Garages					
Class: CD Exterior: Siding Foundation: 18 Inch (Unfinished)					
Base Cost			576	19,935	14,553
			Totals:	136,096	99,350

Notes:
ECF (RESIDENTIAL) 1.297 => TCV: 128,857

*** Information herein deemed reliable but not guaranteed***

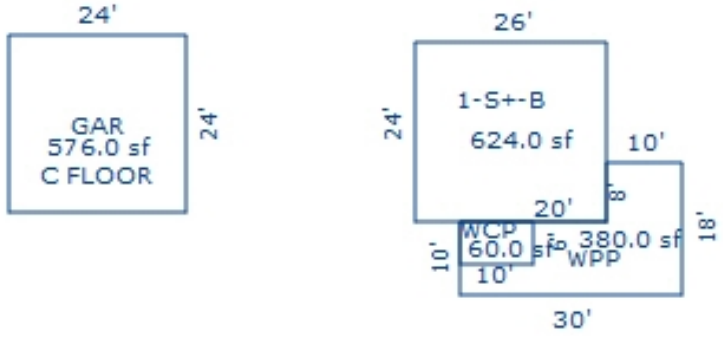

Sketch by Apex Sketch

*** Information herein deemed reliable but not guaranteed***

Parcel Number: 2410-27-3108 Jurisdiction: GREENWOOD TWP County: WEXFORD Printed on 02/15/2024

Grantor	Grantee	Sale Price	Sale Date	Inst. Type	Terms of Sale	Liber & Page	Verified By	Prcnt. Trans.
ANKERSON, LEVI & BREDAHL D	LYTLE, CHAD RICHARD	28,000	11/30/2020	WD	03-ARM'S LENGTH	688/2104	AGENT	100.0
ULREY TRUST	ANKERSON, LEVI & BREDAHL I	16,900	12/15/2017	WD	03-ARM'S LENGTH	6811/964	DEED	100.0
ULREY, JAMES M & NANCY J	ULTREY TRUST	0	10/07/2010	WD	21-NOT USED/OTHER	634/2662	DEED	0.0
STALEY, CHARLES P.	ULREY, JAMES & NANCY	18,900	10/11/1996	LC	03-ARM'S LENGTH	351:995	DEED	0.0

Property Address

3435 GREENWOOD LN

Owner's Name/Address

LYTLE, CHAD RICHARD
3435 GREENWOOD LN
MANTON MI 49663

Tax Description

PARCEL "H" DESC AS COM AT W 1/4 COR OF SEC; TH E 24118.90 FT TO POB: TH E 138.99 FT TO N/S1/4 LINE; S1314.44 FT TO S 1/8 LINE; W 164.46 FT; N 2959'51" W 701.47 FT; N 27D40'16" E 799.36 FT TO POB. SUB TO & TOG WITH EASTEMT --10.01 A GW. SEC 27 24N R10W -MANTON-

Comments/Influences

The Equalizer. Copyright (c) 1999 - 2009. Licensed To: Township of Greenwood, County of Wexford, Michigan

Class: RESIDENTIAL-IMPROV Zoning:

School: MANTON CONSOLIDATED SCHOOLS

P.R.E. 100% 03/03/2023

:

2024 Est TCV 288,676 TCV/TFA: 231.31

Building Permit(s)	Date	Number	Status
RESIDENTIAL - NEW	04/06/2022	PB22-0045	ENTERED

X Improved | Vacant

	Public Improvements
	Dirt Road
X	Gravel Road
	Paved Road
	Storm Sewer
	Sidewalk
	Water
	Sewer
X	Electric
	Gas
	Curb
	Street Lights
	Standard Utilities
	Underground Utils.

	Topography of Site
	Level
X	Rolling
	Low
	High
	Landscaped
	Swamp
X	Wooded
	Pond
	Waterfront
	Ravine
	Wetland
	Flood Plain

Who	When	What
DB	10/23/2023	INSPECTION
GLA	07/10/2019	INSPECTION
GLA	07/10/2019	INSPECTION

Land Value Estimates for Land Table 4010.LAND VALUES

Description	Frontage	Depth	* Factors * Front	Depth	Rate	%Adj.	Reason	Value
ACREAGE			10.010 Acres		4,631	100		46,353
			10.01 Total Acres		Total Est. Land Value =			46,353

Land Improvement Cost Estimates

Description	Rate	Size	% Good	Cash Value
D/W/P: 3.5 Concrete	6.63	464	100	3,076
D/W/P: 3.5 Concrete	6.63	152	100	1,008
Total Estimated Land Improvements True Cash Value =				4,084

Year	Land Value	Building Value	Assessed Value	Board of Review	Tribunal/ Other	Taxable Value
2024	23,200	121,100	144,300			116,700C
2023	13,000	83,900	96,900			90,000C
2022	12,000	0	12,000		12,000A	12,000S
2021	12,000	0	12,000			12,000S

*** Information herein deemed reliable but not guaranteed***

Building Type

X	Single Family
	Mobile Home
	Town Home
	Duplex
	A-Frame
X	Wood Frame

Building Style: PLAIN

Yr Built	Remodeled
0	0

Condition: Good

Room List

	Basement
	1st Floor
	2nd Floor
	Bedrooms

(1) Exterior

	Wood/Shingle
X	Aluminum/Vinyl
	Brick
X	Insulation

(2) Windows

	Many		Large
X	Avg.	X	Avg.
	Few		Small

	Wood Sash
	Metal Sash
X	Vinyl Sash
	Double Hung
	Horiz. Slide
	Casement
	Double Glass
	Patio Doors
X	Storms & Screens

(3) Roof

X	Gable		Gambrel
	Hip		Mansard
	Flat		Shed

X	Asphalt Shingle

Chimney:

(3) Roof (cont.)

	Eavestrough
X	Insulation
0	Front Overhang
0	Other Overhang

(4) Interior

X	Drywall		Plaster
	Paneled		Wood T&G

Trim & Decoration

	Ex	X	Ord		Min

Size of Closets

	Lg	X	Ord		Small

Doors:		Solid	X	H.C.	

(5) Floors

Kitchen:
Other: Linoleum
Other: Carpeted

(6) Ceilings

X	Drywall		

(7) Excavation

Basement: 0 S.F.
Crawl: 1248 S.F.
Slab: 0 S.F.
Height to Joists: 0.0

(8) Basement

	Conc. Block
	Poured Conc.
	Stone
	Treated Wood
	Concrete Floor

(9) Basement Finish

	Recreation	SF
	Living	SF
	Walkout Doors (B)	
	No Floor	SF
	Walkout Doors (A)	

(10) Floor Support

Joists:
Unsupported Len:
Cntr.Sup:

(11) Heating/Cooling

X	Gas		Oil		Elec.
	Wood		Coal		Steam

	Forced Air w/o Ducts
X	Forced Air w/ Ducts
	Forced Hot Water
	Electric Baseboard
	Elec. Ceil. Radiant
	Radiant (in-floor)
	Electric Wall Heat
	Space Heater
	Wall/Floor Furnace
	Forced Heat & Cool
	Heat Pump
	No Heating/Cooling

	Central Air
	Wood Furnace

(12) Electric

150	Amps Service

No./Qual. of Fixtures

	Ex.	X	Ord.		Min

No. of Elec. Outlets

	Many	X	Ave.		Few

(13) Plumbing

	Average Fixture(s)
1	3 Fixture Bath
	2 Fixture Bath
	Softener, Auto
	Softener, Manual
	Solar Water Heat
	No Plumbing
	Extra Toilet
	Extra Sink
	Separate Shower
	Ceramic Tile Floor
	Ceramic Tile Wains
	Ceramic Tub Alcove
	Vent Fan

(14) Water/Sewer

	Public Water
	Public Sewer
1	Water Well
1	1000 Gal Septic
	2000 Gal Septic

Lump Sum Items:

(15) Built-ins

	Appliance Allow.
	Cook Top
	Dishwasher
	Garbage Disposal
	Bath Heater
	Vent Fan
	Hot Tub
	Unvented Hood
	Vented Hood
	Intercom
	Jacuzzi Tub
	Jacuzzi repl.Tub
	Oven
	Microwave
	Standard Range
	Self Clean Range
	Sauna
	Trash Compactor
	Central Vacuum
	Security System

(15) Fireplaces

	Interior 1 Story
	Interior 2 Story
	2nd/Same Stack
	Two Sided
	Exterior 1 Story
	Exterior 2 Story
	Prefab 1 Story
	Prefab 2 Story
	Heat Circulator
	Raised Hearth
	Wood Stove
	Direct-Vented Gas

Class: CD
Effec. Age: 3
Floor Area: 1,248
Total Base New : 188,601 E.C.F.
Total Depr Cost: 183,685 X 1.297
Estimated T.C.V: 238,239

(16) Porches/Decks

Area	Type
256	WPP
384	Roof Cover Onl

(17) Garage

Year Built: 2023
Car Capacity:
Class: D
Exterior: Pole
Brick Ven.: 0
Stone Ven.: 0
Common Wall: Detache
Foundation: 18 Inch
Finished ?:
Auto. Doors: 3
Mech. Doors: 0
Area: 1216
% Good: 100
Storage Area: 0
No Conc. Floor: 0

Bsmnt Garage:

Carport Area:
Roof:

Cost Est. for Res. Bldg: 1 Single Family PLAIN Cls CD Blt 0
(11) Heating System: Forced Air w/ Ducts
Ground Area = 1248 SF Floor Area = 1248 SF.
Phy/Ab.Phy/Func/Econ/Comb. % Good=97/100/100/100/97
Building Areas

Stories	Exterior	Foundation	Size	Cost New	Depr. Cost	
1 Story	Siding	Crawl Space	1,248			
			Total:	143,851	139,536	
Other Additions/Adjustments						
Water/Sewer						
1000 Gal Septic			1	4,582	4,445	
Water Well, 100 Feet			1	5,680	5,510	
Porches						
WPP			256	4,447	4,314	
Garages						
Class: D Exterior: Pole (Unfinished)						
Door Opener			3	1,300	1,300	
Base Cost			1216	23,384	23,384	*1
Deck						
w/Roof (Roof portion)			384	5,357	5,196	
			Totals:	188,601	183,685	

Notes:
ECF (RESIDENTIAL) 1.297 => TCV: 238,239

*** Information herein deemed reliable but not guaranteed***

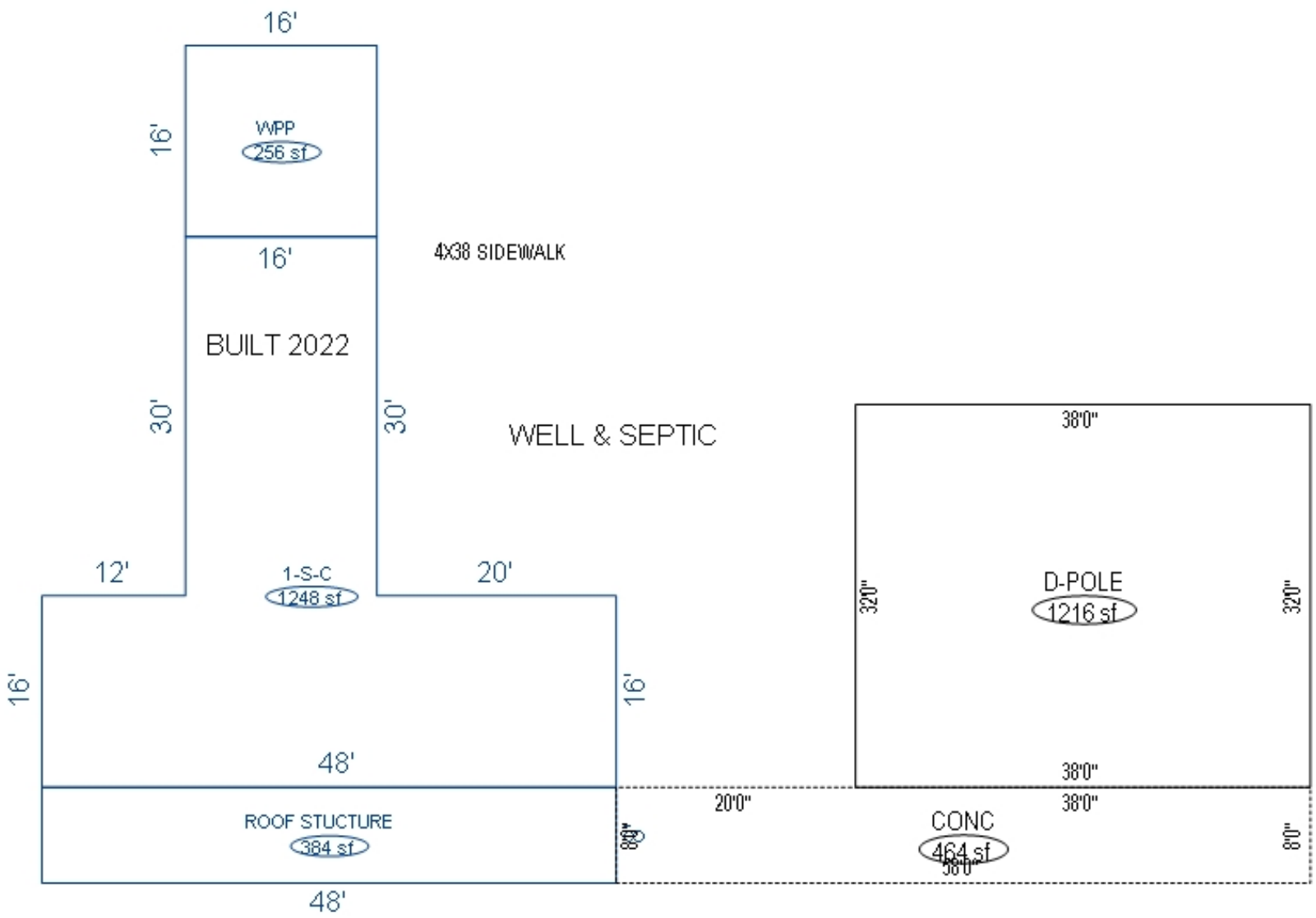

*** Information herein deemed reliable but not guaranteed***

Parcel Number: 2410-27-3109 Jurisdiction: GREENWOOD TWP County: WEXFORD Printed on 02/15/2024

Grantor	Grantee	Sale Price	Sale Date	Inst. Type	Terms of Sale	Liber & Page	Verified By	Prcnt. Trans.
HOLT, TAMMY SUE (PERSONAL	LYTLE, CHAD R	17,000	09/26/2019	WD	03-ARM'S LENGTH	685 /2619	DEED	100.0
CLARK, LARRY E.	HOLT, TAMMY SUE (PERSONAL	0	01/18/2018	OTH	06-COURT JUDGEMENT	681 /2664	DEED	0.0
STALEY,	CLARK, LARRY E	15,000	05/12/2006	WD	16-LC PAYOFF	685 /2618	DEED	0.0
STALEY, CHARLES P.	CLARK, LARRY & HAZEL	15,000	06/07/1997	LC	03-ARM'S LENGTH	355:385	DEED	0.0

Property Address

Owner's Name/Address

LYTLE, CHAD R
3435 GREENWOOD LN
MANTON MI 49663

Tax Description

PARCEL "I" DESC AS COM AT W 1/4 COR OF SEC; TH S 1316.32 FT; TH E 1678.03 FT TO POB: TH CON'T E 717.55 FT; TH N 29D59'51" W 701.47 FT; TH S 81D35'28" W 50 FT; TH N 65D19'50" W 154.86 FT; TH S 46D05'07" W 246.15 FT; TH S 520 FT TO POB. SUB TO & TOG WITH EASMNT. 7.74 A. GW. SEC. 27 T24N R10W -MANTON-

Comments/Influences

Class: RESIDENTIAL-VACANT Zoning:

School: MANTON CONSOLIDATED SCHOOLS

P.R.E. 100% 03/03/2023

:

2024 Est TCV 38,390

Building Permit(s)	Date	Number	Status

	Improved	X	Vacant

	Public Improvements
X	Dirt Road
X	Gravel Road
	Paved Road
	Storm Sewer
	Sidewalk
	Water
	Sewer
X	Electric
	Gas
	Curb
	Street Lights
	Standard Utilities
	Underground Utils.

	Topography of Site
	Level
	Rolling
	Low
	High
	Landscaped
	Swamp
X	Wooded
	Pond
	Waterfront
	Ravine
	Wetland
	Flood Plain
X	PINES

Who	When	What
GLA	07/10/2019	INSPECTION
GLA	07/10/2019	INSPECTION

Land Value Estimates for Land Table 4010.LAND VALUES

Description	Frontage	Depth	* Factors * Front	Depth	Rate	%Adj.	Reason	Value
ACREAGE			7.740 Acres		4,960	100		38,390
			7.74 Total Acres		Total Est. Land Value =			38,390

Year	Land Value	Building Value	Assessed Value	Board of Review	Tribunal/ Other	Taxable Value
2024	19,200	0	19,200			12,017C
2023	12,200	0	12,200			11,445C
2022	10,900	0	10,900		10,900A	10,900S
2021	11,900	0	11,900			10,849C

The Equalizer. Copyright (c) 1999 - 2009. Licensed To: Township of Greenwood, County of Wexford, Michigan

*** Information herein deemed reliable but not guaranteed***

Parcel Number: 2410-27-3110 Jurisdiction: GREENWOOD TWP County: WEXFORD Printed on 02/15/2024

Grantor	Grantee	Sale Price	Sale Date	Inst. Type	Terms of Sale	Liber & Page	Verified By	Prcnt. Trans.
COUCOUVANIS, DIMITRI TRUST	COUCOUVANIS, NICHOLAS W	0	08/31/2018	QC	09-FAMILY	683 /1652	DEED	0.0
COUCOUVANIS, DIMITRI	COUCOUVANIS, DIMITRI TRUST	0	10/05/2007	WD	09-FAMILY	605/2212	DEED	0.0
POISSON, MARK	COUCOUVANIS, DIMITRI	18,000	12/01/2003	QC	09-FAMILY	585:113	DEED	0.0
POISSON, JOANNE J	POISSON, MARK LEE	1	05/08/2001	QC	09-FAMILY	382:373	DEED	0.0

Property Address

Owner's Name/Address

COUCOUVANIS, NICHOLAS W
483 MADISON DR
SAN JOSE CA 95123

Tax Description

PARCEL "J" DESC AS COM AT W 1/4 COR OF SEC; TH S 796.32 FT; E 1232.28 FT TO POB: TH CON'T E 445.74 FT; TH N 46D05'07" E 246.15 FT; TH N 38D42'19" W 248.55 FT; TH N 59D10'42" W 147.81 FT; TH N 81D18'38" W 345.47 FT; TH S 508.70 FT TO POB. SUB TO TOG WITH EASMNT. 5.51 A. GW. SEC. 27 T24N R10W -MANTON-

Comments/Influences

Class: RESIDENTIAL-VACANT Zoning:

School: MANTON CONSOLIDATED SCHOOLS

P.R.E. 0%

:

2024 Est TCV 25,342

Building Permit(s)	Date	Number	Status

	Improved	X	Vacant

	Public Improvements
X	Dirt Road
X	Gravel Road
	Paved Road
	Storm Sewer
	Sidewalk
	Water
	Sewer
X	Electric
	Gas
	Curb
	Street Lights
	Standard Utilities
	Underground Utils.

	Topography of Site
	Level
X	Rolling
	Low
	High
	Landscaped
	Swamp
X	Wooded
	Pond
	Waterfront
	Ravine
	Wetland
	Flood Plain

Who	When	What
GLA	07/10/2019	INSPECTION
GLA	07/10/2019	INSPECTION

Land Value Estimates for Land Table 4010.LAND VALUES

Description	Frontage	Depth	* Factors * Front	Depth	Rate	%Adj.	Reason	Value
ACREAGE			4.960 Acres		5,109	100		25,342
ROW			0.550 Acres		0	100		0
			5.51 Total Acres		Total Est. Land Value =			25,342

Year	Land Value	Building Value	Assessed Value	Board of Review	Tribunal/ Other	Taxable Value
2024	12,700	0	12,700			6,885C
2023	10,700	0	10,700			6,558C
2022	7,500	0	7,500			6,246C
2021	8,500	0	8,500			6,047C

The Equalizer. Copyright (c) 1999 - 2009. Licensed To: Township of Greenwood, County of Wexford, Michigan

*** Information herein deemed reliable but not guaranteed***

Parcel Number: 2410-27-3111 Jurisdiction: GREENWOOD TWP County: WEXFORD Printed on 02/15/2024

Grantor	Grantee	Sale Price	Sale Date	Inst. Type	Terms of Sale	Liber & Page	Verified By	Prcnt. Trans.
COSGROVE, DAVID M	DAVIS, KYLE R	119,000	09/28/2020	WD	03-ARM'S LENGTH	688/397	AGENT	100.0
COSGROVE, DAVID M	SMITH, ALLYSON D	57,500	04/28/2006	LC	19-MULTI PARCEL ARM'S LEN	587:74	DEED	0.0
SMITH, ALLYSON D	COSGROVE, DAVID M	0	04/28/2006	QC	21-NOT USED/OTHER	595/371	DEED	0.0

Property Address

7260 N 31 RD

Owner's Name/Address

DAVIS, KYLE R
7260 N 31 RD
MESICK MI 49668

Tax Description

PARCEL "D" DESC AS COM AT W 1/4 COR OF SEC; TH S 796.32 FT TO POB: TH CON'T S 330 FT; TH E 400 FT; TH N 79D46'59" E 1297.37 FT; TH N 146 FT; TH W 1678.03 FT TO POB. SUB TO & TOG WITH EASMNT. --10.01 A. & PARCEL "E" DESC AS COM AT W 1/4 COR OF SEC; TH S 1126.32 FT TO POB: TH CON'T S 190 FT; TH E 1678.03 FT; TH N 374 FT; TH S 79D46'59" W 1297.37 FT; TH W 400 FT TO POB. SUB TO & TOG W/ EASMT --10.01 A M/L -TOTAL 20.02 A M/L -GW SEC 27 T24N R10W -MANTON- [[ASSESSED W/ 27-3105 '06 ASSESSED W/ 27-3104 & 3105

The Equalizer. Copyright (c) 1999 - 2009. Licensed To: Township of Greenwood, County of Wexford, Michigan

Class: RESIDENTIAL-IMPROV Zoning:

School: MANTON CONSOLIDATED SCHOOLS

P.R.E. 100% 10/22/2020

:

2024 Est TCV 144,313 TCV/TFA: 161.06

Building Permit(s)	Date	Number	Status

X Improved | Vacant

Public Improvements

- Dirt Road
- Gravel Road
- X Paved Road
- Storm Sewer
- Sidewalk
- Water
- Sewer
- X Electric
- Gas
- Curb
- Street Lights
- Standard Utilities
- Underground Utils.

Topography of Site

- Level
- X Rolling
- Low
- High
- Landscaped
- Swamp
- X Wooded
- Pond
- Waterfront
- Ravine
- Wetland
- Flood Plain

Who	When	What
GLA	07/10/2019	INSPECTION
GLA	07/10/2019	INSPECTION

Land Value Estimates for Land Table 4010.LAND VALUES

Description	Frontage	Depth	* Factors * Front	Depth	Rate	%Adj.	Reason	Value
ACREAGE			19.630 Acres		3,200	100		62,816
ROW			0.390 Acres		0	100		0
			20.02 Total Acres		Total Est. Land Value =			62,816

Land Improvement Cost Estimates

Description	Rate	Size	% Good	Cash Value
D/W/P: 3.5 Concrete	6.63	318	45	949
Total Estimated Land Improvements True Cash Value =				949

Year	Land Value	Building Value	Assessed Value	Board of Review	Tribunal/ Other	Taxable Value
2024	31,400	40,800	72,200			46,806C
2023	25,500	33,400	58,900			44,578C
2022	21,600	28,400	50,000			42,456C
2021	19,900	21,200	41,100			41,100S

*** Information herein deemed reliable but not guaranteed***

Building Type

X	Single Family
	Mobile Home
	Town Home
	Duplex
	A-Frame
X	Wood Frame

Building Style: PLAIN

Yr Built	Remodeled
0	0

Condition: Good

Room List

	Basement
	1st Floor
	2nd Floor
	Bedrooms

(1) Exterior

X	Wood/Shingle
	Aluminum/Vinyl
	Brick
X	Insulation

(2) Windows

X	Many Avg. Few	X	Large Avg. Small

	Wood Sash
	Metal Sash
X	Vinyl Sash
	Double Hung
	Horiz. Slide
	Casement
	Double Glass
	Patio Doors
X	Storms & Screens

(3) Roof

X	Gable		Gambrel
	Hip		Mansard
	Flat		Shed

X	Asphalt Shingle

Chimney:

(3) Roof (cont.)

	Eavestrough
X	Insulation
0	Front Overhang
0	Other Overhang

(4) Interior

X	Drywall		Plaster
	Paneled		Wood T&G

Trim & Decoration

	Ex	X	Ord		Min

Size of Closets

	Lg	X	Ord		Small

Doors:		Solid	X	H.C.	

(5) Floors

Kitchen:
Other: Linoleum
Other: Carpeted

(6) Ceilings

X	Drywall		

(7) Excavation

Basement: 0 S.F.
Crawl: 0 S.F.
Slab: 896 S.F.
Height to Joists: 0.0

(8) Basement

	Conc. Block
	Poured Conc.
	Stone
	Treated Wood
	Concrete Floor

(9) Basement Finish

	Recreation SF
	Living SF
	Walkout Doors (B)
	No Floor SF
	Walkout Doors (A)

(10) Floor Support

Joists:
Unsupported Len:
Cntr.Sup:

(11) Heating/Cooling

X	Gas		Oil		Elec.
	Wood		Coal		Steam

	Forced Air w/o Ducts
X	Forced Air w/ Ducts
	Forced Hot Water
	Electric Baseboard
	Elec. Ceil. Radiant
	Radiant (in-floor)
	Electric Wall Heat
	Space Heater
	Wall/Floor Furnace
	Forced Heat & Cool
	Heat Pump
	No Heating/Cooling

	Central Air
	Wood Furnace

(12) Electric

150	Amps Service

No./Qual. of Fixtures

	Ex.	X	Ord.		Min

No. of Elec. Outlets

	Many	X	Ave.		Few

(13) Plumbing

	Average Fixture(s)
1	3 Fixture Bath
	2 Fixture Bath
	Softener, Auto
	Softener, Manual
	Solar Water Heat
	No Plumbing
	Extra Toilet
	Extra Sink
	Separate Shower
	Ceramic Tile Floor
	Ceramic Tile Wains
	Ceramic Tub Alcove
	Vent Fan

(14) Water/Sewer

	Public Water
	Public Sewer
1	Water Well
1	1000 Gal Septic
	2000 Gal Septic

Lump Sum Items:

(15) Built-ins

	Appliance Allow.
	Cook Top
	Dishwasher
	Garbage Disposal
	Bath Heater
	Vent Fan
	Hot Tub
	Unvented Hood
	Vented Hood
	Intercom
	Jacuzzi Tub
	Jacuzzi repl.Tub
	Oven
	Microwave
	Standard Range
	Self Clean Range
	Sauna
	Trash Compactor
	Central Vacuum
	Security System

(15) Fireplaces

	Interior 1 Story
	Interior 2 Story
	2nd/Same Stack
	Two Sided
	Exterior 1 Story
	Exterior 2 Story
	Prefab 1 Story
	Prefab 2 Story
	Heat Circulator
	Raised Hearth
	Wood Stove
	Direct-Vented Gas

Class: CD
Effec. Age: 42
Floor Area: 896
Total Base New : 133,845 E.C.F.
Total Depr Cost: 62,103 X 1.297
Estimated T.C.V: 80,548

(16) Porches/Decks

Area	Type

(17) Garage

Year Built:
Car Capacity:
Class: CD
Exterior: Pole
Brick Ven.: 0
Stone Ven.: 0
Common Wall: Detache
Foundation: 18 Inch
Finished ?:
Auto. Doors: 0
Mech. Doors: 0
Area: 800
% Good: 0
Storage Area: 0
No Conc. Floor: 0

Bsmnt Garage:

Carport Area:
Roof:

Cost Est. for Res. Bldg: 1 Single Family PLAIN Cls CD Blt 0
(11) Heating System: Forced Air w/ Ducts
Ground Area = 896 SF Floor Area = 896 SF.
Phy/Ab.Phy/Func/Econ/Comb. % Good=58/100/80/100/46.4
Functional Depreciation because of: MOLD
Building Areas

Stories	Exterior	Foundation	Size	Cost New	Depr. Cost
1 Story	Siding	Slab	896		
			Total:	104,663	48,562
Other Additions/Adjustments					
Water/Sewer					
1000 Gal Septic			1	4,582	2,126
Water Well, 100 Feet			1	5,680	2,636
Garages					
Class: CD Exterior: Pole (Unfinished)					
Base Cost			800	18,920	8,779
			Totals:	133,845	62,103

Notes:
ECF (RESIDENTIAL) 1.297 => TCV: 80,548

*** Information herein deemed reliable but not guaranteed***

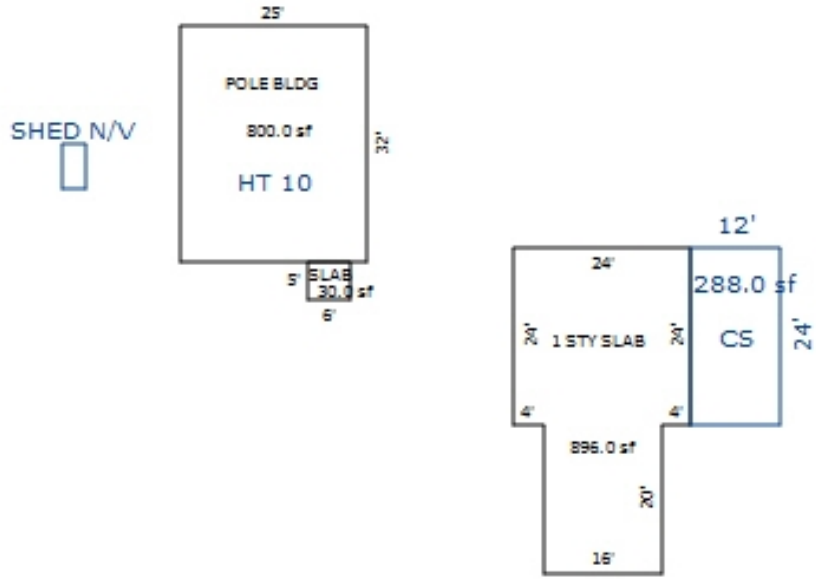

Sketch by Apex Sketch

*** Information herein deemed reliable but not guaranteed***

Parcel Number: 2410-27-3301 Jurisdiction: GREENWOOD TWP County: WEXFORD Printed on 02/15/2024

Grantor	Grantee	Sale Price	Sale Date	Inst. Type	Terms of Sale	Liber & Page	Verified By	Prcnt. Trans.
HUMPHREY, MICHAEL K	HUMPHREY, MICHAEL K &	0	06/14/2018	QC	14-INTO/OUT OF TRUST	682 /2590	DEED	0.0
CARPENTER, ROGER	HUMPHREY, MICHAEL K	14,000	08/07/2017	WD	03-ARM'S LENGTH	680 /2400	DEED	100.0
JERNIGAN, FRED	CARPENTER, ROGER & SUSAN	14,000	07/26/1999	WD	03-ARM'S LENGTH	368:806	DEED	0.0
CARPENTER, ROGER	JERNIGAN, FRED & JACKIE	15,000	09/27/1997	WD	03-ARM'S LENGTH	357:234	DEED	0.0

Property Address

3217 N 12 MILE RD

Owner's Name/Address

HUMPHREY, MICHAEL K &
PATRICIA L MORRIS TRUST
3214 N 12 MILE RD
MANTON MI 49663

Tax Description

E 20 RDS OF SW 1/4 OF SW 1/4 10 A. GW. SEC. 27 T24N R10W -MANTON-

Comments/Influences

Class: RESIDENTIAL-IMPROV Zoning:

School: MANTON CONSOLIDATED SCHOOLS

P.R.E. 100% 08/13/2018

:

2024 Est TCV 239,434 TCV/TFA: 237.53

Building Permit(s)	Date	Number	Status
OTHER	10/04/2018	PB18-0207	COMPLETE
Res. Add/Alter/Repair	10/03/2018	PB18-140	ENTERED
Res. New Construction	10/25/2017	PB17-0237	ENTERED

X	Improved		Vacant

	Public Improvements
	Dirt Road
X	Gravel Road
	Paved Road
	Storm Sewer
	Sidewalk
	Water
	Sewer
X	Electric
	Gas
	Curb
	Street Lights
	Standard Utilities
	Underground Utils.

	Topography of Site
	Level
X	Rolling
	Low
	High
	Landscaped
	Swamp
X	Wooded
	Pond
	Waterfront
	Ravine
	Wetland
	Flood Plain
X	OPEN

Who	When	What
DB	10/23/2023	INSPECTION
GLA	07/10/2019	INSPECTION
GLA	07/10/2019	INSPECTION

The Equalizer. Copyright (c) 1999 - 2009.
Licensed To: Township of Greenwood, County of Wexford, Michigan

Land Value Estimates for Land Table 4010.LAND VALUES

Description	Frontage	Depth	* Factors * Front	Depth	Rate	%Adj.	Reason	Value
ACREAGE			9.760 Acres		4,662	100		45,505
ROW			0.240 Acres		0	100		0
			10.00 Total Acres		Total Est. Land Value =			45,505

Land Improvement Cost Estimates

Description	Rate	Size	% Good	Cash Value
Wood Frame	23.41	336	87	6,843
Total Estimated Land Improvements True Cash Value =				6,843

Year	Land Value	Building Value	Assessed Value	Board of Review	Tribunal/ Other	Taxable Value
2024	22,800	96,900	119,700			82,842C
2023	12,900	77,200	90,100			78,898C
2022	11,900	65,000	76,900			75,141C
2021	12,000	65,700	77,700			72,741C

*** Information herein deemed reliable but not guaranteed***

Building Type

X	Single Family
	Mobile Home
	Town Home
	Duplex
	A-Frame
X	Wood Frame

Building Style: PLAIN

Yr Built	Remodeled
2018	0

Condition: Good

Room List

	Basement
	1st Floor
	2nd Floor
	Bedrooms

(1) Exterior

X	Wood/Shingle
	Aluminum/Vinyl
	Brick
X	Insulation

(2) Windows

X	Many Avg. Few	X	Large Avg. Small

	Wood Sash
	Metal Sash
X	Vinyl Sash
	Double Hung
	Horiz. Slide
	Casement
	Double Glass
	Patio Doors
X	Storms & Screens

(3) Roof

X	Gable		Gambrel
	Hip		Mansard
	Flat		Shed

X	Asphalt Shingle

Chimney:

(3) Roof (cont.)

	Eavestrough
X	Insulation
0	Front Overhang
0	Other Overhang

(4) Interior

X	Drywall		Plaster
	Paneled		Wood T&G

Trim & Decoration

	Ex	X	Ord		Min

Size of Closets

	Lg	X	Ord		Small

Doors:		Solid	X	H.C.	

(5) Floors

Kitchen:
Other: Linoleum
Other: Carpeted

(6) Ceilings

X	Drywall		

(7) Excavation

Basement: 392 S.F.
Crawl: 0 S.F.
Slab: 616 S.F.
Height to Joists: 0.0

(8) Basement

	Conc. Block
	Poured Conc.
	Stone
	Treated Wood
	Concrete Floor

(9) Basement Finish

	Recreation SF
	Living SF
	Walkout Doors (B)
	No Floor SF
1	Walkout Doors (A)

(10) Floor Support

Joists:
Unsupported Len:
Cntr.Sup:

(11) Heating/Cooling

X	Gas		Oil		Elec.
	Wood		Coal		Steam

	Forced Air w/o Ducts
	Forced Air w/ Ducts
	Forced Hot Water
	Electric Baseboard
	Elec. Ceil. Radiant
	Radiant (in-floor)
	Electric Wall Heat
	Space Heater
	Wall/Floor Furnace
X	Forced Heat & Cool
	Heat Pump
	No Heating/Cooling

	Central Air
	Wood Furnace

(12) Electric

150	Amps Service

No./Qual. of Fixtures

	Ex.	X	Ord.		Min

No. of Elec. Outlets

	Many	X	Ave.		Few

(13) Plumbing

1	Average Fixture(s)
	3 Fixture Bath
	2 Fixture Bath
	Softener, Auto
	Softener, Manual
	Solar Water Heat
	No Plumbing
	Extra Toilet
	Extra Sink
	Separate Shower
	Ceramic Tile Floor
	Ceramic Tile Wains
	Ceramic Tub Alcove
	Vent Fan

(14) Water/Sewer

	Public Water
	Public Sewer
1	Water Well
1	1000 Gal Septic
	2000 Gal Septic

Lump Sum Items:

(15) Built-ins

	Appliance Allow.
	Cook Top
	Dishwasher
	Garbage Disposal
	Bath Heater
	Vent Fan
	Hot Tub
	Unvented Hood
	Vented Hood
	Intercom
	Jacuzzi Tub
	Jacuzzi repl.Tub
	Oven
	Microwave
	Standard Range
	Self Clean Range
	Sauna
	Trash Compactor
	Central Vacuum
	Security System

(15) Fireplaces

	Interior 1 Story
	Interior 2 Story
	2nd/Same Stack
	Two Sided
	Exterior 1 Story
	Exterior 2 Story
	Prefab 1 Story
	Prefab 2 Story
	Heat Circulator
	Raised Hearth
	Wood Stove
	Direct-Vented Gas

Class: C
Effec. Age: 7
Floor Area: 1,008
Total Base New : 206,804 E.C.F.
Total Depr Cost: 144,245 X 1.297
Estimated T.C.V: 187,086

(16) Porches/Decks

Area	Type
216	WCP (1 Story)
324	4in Concrete
36	WPP

(17) Garage

Year Built:
Car Capacity:
Class: C
Exterior: Pole
Brick Ven.: 0
Stone Ven.: 0
Common Wall: Detache
Foundation: 18 Inch
Finished ?: Yes
Auto. Doors: 0
Mech. Doors: 0
Area: 1008
% Good: 0
Storage Area: 0
No Conc. Floor: 0

Bsmnt Garage:

Carport Area:
Roof:

Cost Est. for Res. Bldg: 1 Single Family PLAIN Cls C Blt 2018
(11) Heating System: Forced Heat & Cool
Ground Area = 1008 SF Floor Area = 1008 SF.
Phy/Ab.Phy/Func/Econ/Comb. % Good=93/75/100/100/69.75
Building Areas

Stories	Exterior	Foundation	Size	Cost New	Depr. Cost
1 Story	Siding	Slab	616		
1 Story	Siding	Basement	392		
			Total:	147,696	103,018
Other Additions/Adjustments					
Basement, Outside Entrance, Above Grade			1	1,883	1,313
Water/Sewer					
1000 Gal Septic			1	4,899	3,417
Water Well, 100 Feet			1	5,849	4,080
Porches					
WCP (1 Story)			216	8,476	5,912
WPP			36	1,765	1,231
4in Concrete			324	2,670	1,862
Garages					
Class: C Exterior: Pole (Finished)					
Base Cost			1008	33,566	23,412
			Totals:	206,804	144,245

Notes:

ECF (RESIDENTIAL) 1.297 => TCV: 187,086

*** Information herein deemed reliable but not guaranteed***

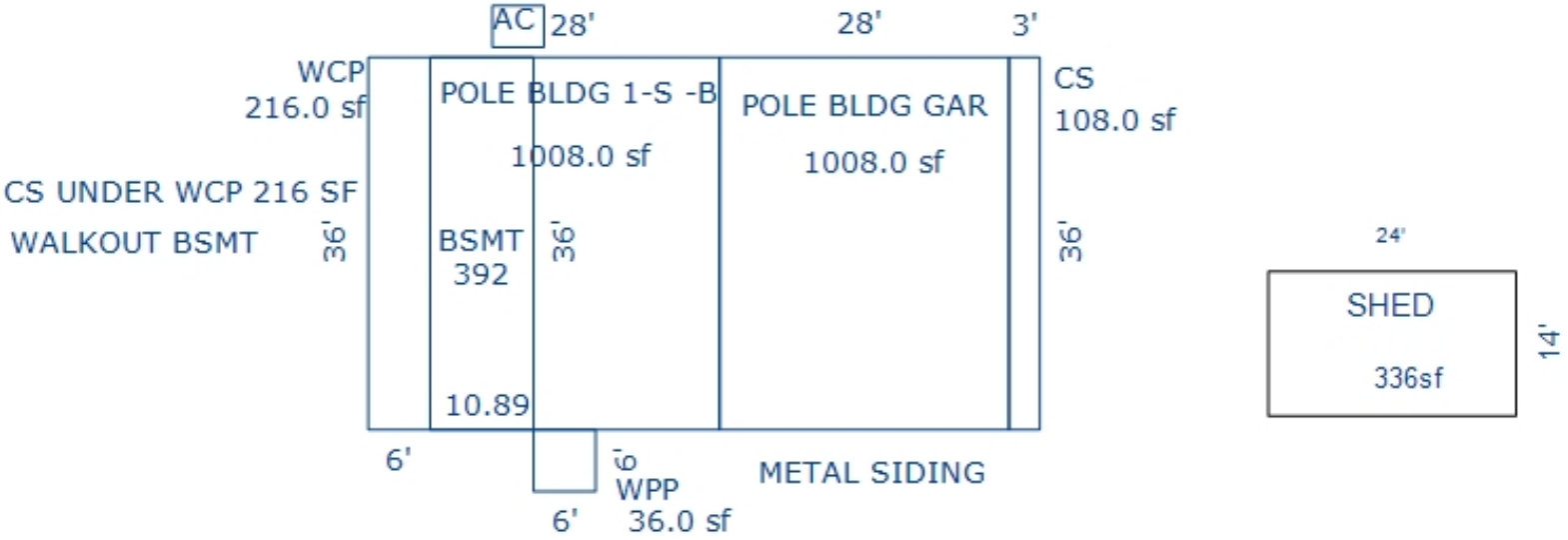

*** Information herein deemed reliable but not guaranteed***

Parcel Number: 2410-27-3302 Jurisdiction: GREENWOOD TWP County: WEXFORD Printed on 02/15/2024

Grantor	Grantee	Sale Price	Sale Date	Inst. Type	Terms of Sale	Liber & Page	Verified By	Prcnt. Trans.
ZIMMERMAN, KRISTINE M & ST	ZIMMERMAN, KRISTINE M TRUS	0	10/28/2022	QC	14-INTO/OUT OF TRUST	694/834	DEED	0.0
INDEPENDENT BANK	ZIMMERMAN, KRISTINE M & ST	4,950	09/16/2009	WD	11-FROM LENDING INSTITUTI	624/1370	DEED	100.0
GRIFFES, DUANE C & JOY L	INDEPENDENT BANK	9,346	03/20/2009	SD	10-FORECLOSURE	619/1091	DEED	0.0
NUNES, KENNETH & JACQUELIN	GRIFFEN, DUANE & JOY	13,000	09/13/2006	QC	03-ARM'S LENGTH	592:2298	DEED	0.0

Property Address

3031 E 12 RD

Owner's Name/Address

ZIMMERMAN, KRISTINE M & STEVEN A
6390 AMY SCHOOL RD
HOWARD CITY MI 49329

Tax Description

W 15 1/2 RDS OF S 15 1/2 RDS OF SW 1/4 OF SW 1/4 --1.5 A. -- GW. SEC. 27 T24N R10W -MANTON-

Comments/Influences

The Equalizer. Copyright (c) 1999 - 2009. Licensed To: Township of Greenwood, County of Wexford, Michigan

Class: RESIDENTIAL-IMPROV Zoning:

School: MANTON CONSOLIDATED SCHOOLS

P.R.E. 0%

:

2024 Est TCV 112,437 TCV/TFA: 134.49

Building Permit(s)	Date	Number	Status
RESIDENTIAL - REMODEL	01/17/2003	PM6530	

X	Improved	
	Vacant	

Public Improvements

	Dirt Road
X	Gravel Road
X	Paved Road
	Storm Sewer
	Sidewalk
	Water
	Sewer
X	Electric
	Gas
	Curb
	Street Lights
	Standard Utilities
	Underground Utils.

Topography of Site

X	Level
	Rolling
	Low
	High
	Landscaped
	Swamp
	Wooded
	Pond
	Waterfront
	Ravine
	Wetland
	Flood Plain
X	OPEN

Who	When	What
GLA	07/10/2019	INSPECTION
GLA	07/10/2019	INSPECTION

Land Value Estimates for Land Table 4010.LAND VALUES

Description	Frontage	Depth	* Factors * Front	Depth	Rate	%Adj.	Reason	Value
ACREAGE			1.120 Acres		10,953	100		12,267
ROW			0.380 Acres		0	100		0
			1.50 Total Acres		Total Est. Land Value =			12,267

Year	Land Value	Building Value	Assessed Value	Board of Review	Tribunal/ Other	Taxable Value
2024	6,100	50,100	56,200			35,255C
2023	3,400	41,000	44,400			33,577C
2022	2,800	34,800	37,600			31,979C
2021	3,400	35,400	38,800			30,958C

*** Information herein deemed reliable but not guaranteed***

Building Type

X	Single Family
	Mobile Home
	Town Home
	Duplex
	A-Frame
X	Wood Frame

Building Style: PLAIN

Yr Built	Remodeled
0	0

Condition: Good

Room List

	Basement
	1st Floor
	2nd Floor
	Bedrooms

(1) Exterior

X	Wood/Shingle
	Aluminum/Vinyl
	Brick
X	Insulation

(2) Windows

	Many		Large
X	Avg.	X	Avg.
	Few		Small

X	Wood Sash
	Metal Sash
	Vinyl Sash
	Double Hung
	Horiz. Slide
	Casement
	Double Glass
	Patio Doors
X	Storms & Screens

(3) Roof

X	Gable		Gambrel
	Hip		Mansard
	Flat		Shed

X	Asphalt Shingle

Chimney:

(3) Roof (cont.)

	Eavestrough
X	Insulation
0	Front Overhang
0	Other Overhang

(4) Interior

X	Drywall		Plaster
	Paneled		Wood T&G

Trim & Decoration

	Ex	X	Ord		Min

Size of Closets

	Lg	X	Ord		Small

Doors:		Solid	X	H.C.	

(5) Floors

Kitchen:
Other: Linoleum
Other: Carpeted

(6) Ceilings

X	Drywall		

(7) Excavation

Basement: 0 S.F.
Crawl: 836 S.F.
Slab: 0 S.F.
Height to Joists: 0.0

(8) Basement

	Conc. Block
	Poured Conc.
	Stone
	Treated Wood
	Concrete Floor

(9) Basement Finish

	Recreation SF
	Living SF
	Walkout Doors (B)
	No Floor SF
	Walkout Doors (A)

(10) Floor Support

Joists:
Unsupported Len:
Cntr.Sup:

(11) Heating/Cooling

X	Gas		Oil		Elec.
	Wood		Coal		Steam

	Forced Air w/o Ducts
X	Forced Air w/ Ducts
	Forced Hot Water
	Electric Baseboard
	Elec. Ceil. Radiant
	Radiant (in-floor)
	Electric Wall Heat
	Space Heater
	Wall/Floor Furnace
	Forced Heat & Cool
	Heat Pump
	No Heating/Cooling

	Central Air
	Wood Furnace

(12) Electric

150	Amps Service

No./Qual. of Fixtures

	Ex.	X	Ord.		Min

No. of Elec. Outlets

	Many	X	Ave.		Few

(13) Plumbing

	Average Fixture(s)
1	3 Fixture Bath
	2 Fixture Bath
	Softener, Auto
	Softener, Manual
	Solar Water Heat
	No Plumbing
	Extra Toilet
	Extra Sink
	Separate Shower
	Ceramic Tile Floor
	Ceramic Tile Wains
	Ceramic Tub Alcove
	Vent Fan

(14) Water/Sewer

	Public Water
	Public Sewer
1	Water Well
1	1000 Gal Septic
	2000 Gal Septic

Lump Sum Items:

(15) Built-ins

	Appliance Allow.
	Cook Top
	Dishwasher
	Garbage Disposal
	Bath Heater
	Vent Fan
	Hot Tub
	Unvented Hood
	Vented Hood
	Intercom
	Jacuzzi Tub
	Jacuzzi repl.Tub
	Oven
	Microwave
	Standard Range
	Self Clean Range
	Sauna
	Trash Compactor
	Central Vacuum
	Security System

(15) Fireplaces

	Interior 1 Story
	Interior 2 Story
	2nd/Same Stack
	Two Sided
	Exterior 1 Story
	Exterior 2 Story
	Prefab 1 Story
	Prefab 2 Story
	Heat Circulator
	Raised Hearth
	Wood Stove
	Direct-Vented Gas

Class: CD
Effec. Age: 48
Floor Area: 836
Total Base New : 148,522 E.C.F.
Total Depr Cost: 77,232 X 1.297
Estimated T.C.V: 100,170

(16) Porches/Decks

Area	Type

(17) Garage

Year Built:
Car Capacity:
Class: CD
Exterior: Sid/Br
Brick Ven.: 0
Stone Ven.: 0
Common Wall: Detache
Foundation: 18 Inch
Finished ?:
Auto. Doors: 0
Mech. Doors: 0
Area: 720
% Good: 0
Storage Area: 0
No Conc. Floor: 0

Bsmnt Garage:

Carport Area:
Roof:

Cost Est. for Res. Bldg: 1 Single Family PLAIN Cls CD Blt 0
(11) Heating System: Forced Air w/ Ducts
Ground Area = 836 SF Floor Area = 836 SF.
Phy/Ab.Phy/Func/Econ/Comb. % Good=52/100/100/100/52
Building Areas

Stories	Exterior	Foundation	Size	Cost New	Depr. Cost
1 Story	Siding	Crawl Space	836		
			Total:	101,658	52,862
Other Additions/Adjustments					
Water/Sewer					
1000 Gal Septic			1	4,582	2,383
Water Well, 100 Feet			1	5,680	2,954
Garages					
Class: CD Exterior: Sid/Br Foundation: 18 Inch (Unfinished)					
Base Cost			720	23,436	12,187
Class: CD Exterior: Pole (Unfinished)					
Base Cost			480	13,166	6,846
			Totals:	148,522	77,232

Notes:
ECF (RESIDENTIAL) 1.297 => TCV: 100,170

*** Information herein deemed reliable but not guaranteed***

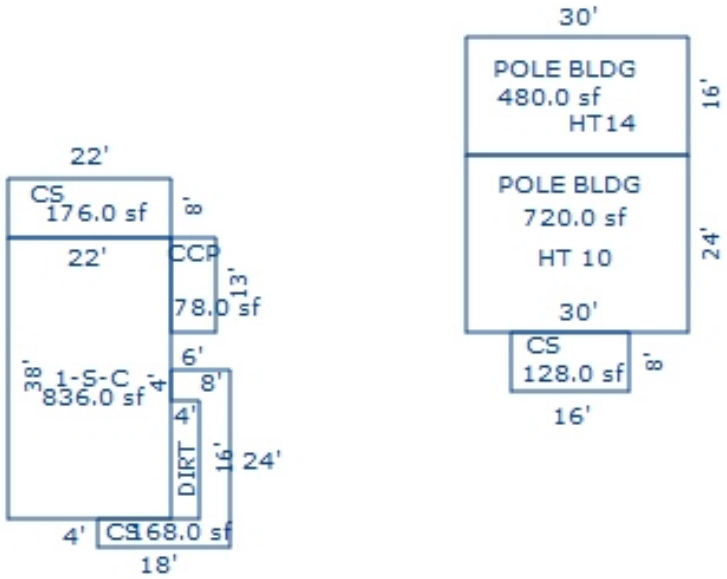

Sketch by Apex Sketch

*** Information herein deemed reliable but not guaranteed***

Parcel Number: 2410-27-3303 Jurisdiction: GREENWOOD TWP County: WEXFORD Printed on 02/15/2024

Grantor	Grantee	Sale Price	Sale Date	Inst. Type	Terms of Sale	Liber & Page	Verified By	Prcnt. Trans.
WOOER, TIMOTHY T	WOOER, TIMOTHY & KATE	0	08/22/2016	QC	21-NOT USED/OTHER	678/910	DEED	0.0
HESSEM, TERRI L	WOOER, TIMOTHY T	30,000	08/08/2000	WD	03-ARM'S LENGTH	376:387	DEED	0.0
SWINEHART, LINDA	HESSEM, TERRI L.	27,000	11/18/1997	WD	03-ARM'S LENGTH	358:266	DEED	0.0

Property Address
7162 N 31 RD

Owner's Name/Address
WOOER, TIMOTHY & KATE
7162 N 31 RD
MANTON MI 49663

Tax Description
W 60 RDS OF SW 1/4 OF SW 1/4 EXC W 15 1/2 RDS OF S 15 1/2 RDS THEREOF 28.5 A. GW. SEC. 27 T24N R10W -MANTON-

Comments/Influences

The Equalizer. Copyright (c) 1999 - 2009. Licensed To: Township of Greenwood, County of Wexford, Michigan

Class: RESIDENTIAL-IMPROV Zoning:
School: MANTON CONSOLIDATED SCHOOLS
P.R.E. 100% 12/07/2016
:
2024 Est TCV 394,809 TCV/TFA: 233.61

Building Permit(s)	Date	Number	Status
RESIDENTIAL - REMODEL	07/14/2003	PB11694	
RESIDENTIAL - NEW	11/15/2000	PM4677	
RESIDENTIAL - NEW	10/10/2000	PE13314	
RESIDENTIAL - NEW	09/22/2000	PP1992	

X Improved | Vacant

Public Improvements

- Dirt Road
- X Gravel Road
- X Paved Road
- Storm Sewer
- Sidewalk
- Water
- Sewer
- X Electric
- Gas
- Curb
- Street Lights
- Standard Utilities
- Underground Utils.

Topography of Site

- Level
- X Rolling
- X Low
- High
- Landscaped
- Swamp
- Wooded
- Pond
- Waterfront
- Ravine
- Wetland
- Flood Plain
- X OPEN/PINES

Who	When	What
GLA	07/10/2019	INSPECTION
GLA	07/10/2019	INSPECTION
LM	10/31/2011	APPR INSPE

Land Value Estimates for Land Table 4010.LAND VALUES

Description	Frontage	Depth	* Factors * Front	Depth	Rate	%Adj.	Reason	Value
ACREAGE			26.170 Acres		2,722	100		71,235
ROW			1.330 Acres		0	100		0
			27.50 Total Acres				Total Est. Land Value =	71,235

Land Improvement Cost Estimates

Description	Rate	Size	% Good	Cash Value
D/W/P: 4in Concrete	6.11	583	38	1,354
Total Estimated Land Improvements True Cash Value =				1,354

Year	Land Value	Building Value	Assessed Value	Board of Review	Tribunal/ Other	Taxable Value
2024	35,600	161,800	197,400			118,369C
2023	32,700	132,000	164,700			112,733C
2022	28,400	111,400	139,800			107,365C
2021	25,500	112,600	138,100			103,936C

*** Information herein deemed reliable but not guaranteed***

Building Type

X	Single Family
	Mobile Home
	Town Home
	Duplex
	A-Frame
X	Wood Frame

Building Style: PLAIN

Yr Built	Remodeled
2001	0

Condition: Average

Room List

	Basement
	1st Floor
	2nd Floor
	Bedrooms

(1) Exterior

X	Wood/Shingle
	Aluminum/Vinyl
	Brick
	Insulation

(2) Windows

X	Many		Large
	Avg.	X	Avg.
	Few		Small

	Wood Sash
	Metal Sash
	Vinyl Sash
	Double Hung
	Horiz. Slide
	Casement
	Double Glass
	Patio Doors
	Storms & Screens

(3) Roof

X	Gable		Gambrel
	Hip		Mansard
	Flat		Shed

X	Asphalt Shingle

Chimney: Brick

(3) Roof (cont.)

	Eavestrough
	Insulation
0	Front Overhang
0	Other Overhang

(4) Interior

	Drywall		Plaster
	Paneled		Wood T&G

Trim & Decoration

	Ex	X	Ord		Min

Size of Closets

	Lg	X	Ord		Small

Doors:		Solid	X	H.C.	

(5) Floors

Kitchen:
Other:
Other:

(6) Ceilings

(7) Excavation

Basement: 1690 S.F.
Crawl: 0 S.F.
Slab: 0 S.F.
Height to Joists: 0.0

(8) Basement

	Conc. Block
	Poured Conc.
	Stone
	Treated Wood
	Concrete Floor

(9) Basement Finish

	Recreation	SF
	Living	SF
1	Walkout Doors	(B)
	No Floor	SF
	Walkout Doors	(A)

(10) Floor Support

Joists:
Unsupported Len:
Cntr.Sup:

(11) Heating/Cooling

X	Gas		Oil		Elec.
	Wood		Coal		Steam

	Forced Air w/o Ducts
X	Forced Air w/ Ducts
	Forced Hot Water
	Electric Baseboard
	Elec. Ceil. Radiant
	Radiant (in-floor)
	Electric Wall Heat
	Space Heater
	Wall/Floor Furnace
	Forced Heat & Cool
	Heat Pump
	No Heating/Cooling

	Central Air
	Wood Furnace

(12) Electric

0	Amps Service

No./Qual. of Fixtures

	Ex.	X	Ord.		Min

No. of Elec. Outlets

	Many	X	Ave.		Few

(13) Plumbing

1	Average Fixture(s)
	3 Fixture Bath
	2 Fixture Bath
	Softener, Auto
	Softener, Manual
	Solar Water Heat
	No Plumbing
	Extra Toilet
	Extra Sink
	Separate Shower
	Ceramic Tile Floor
	Ceramic Tile Wains
	Ceramic Tub Alcove
	Vent Fan

(14) Water/Sewer

	Public Water
	Public Sewer
1	Water Well
1	1000 Gal Septic
	2000 Gal Septic

Lump Sum Items:
1

(15) Built-ins

	Appliance Allow.
	Cook Top
	Dishwasher
	Garbage Disposal
	Bath Heater
	Vent Fan
	Hot Tub
	Unvented Hood
	Vented Hood
	Intercom
	Jacuzzi Tub
	Jacuzzi repl.Tub
	Oven
	Microwave
	Standard Range
	Self Clean Range
	Sauna
	Trash Compactor
	Central Vacuum
	Security System

(15) Fireplaces

	Interior 1 Story
	Interior 2 Story
	2nd/Same Stack
	Two Sided
	Exterior 1 Story
	Exterior 2 Story
	Prefab 1 Story
	Prefab 2 Story
	Heat Circulator
	Raised Hearth
	Wood Stove
1	Direct-Vented Gas

Class: C
Effec. Age: 24
Floor Area: 1,690
Total Base New : 326,888 E.C.F.
Total Depr Cost: 248,435 X 1.297
Estimated T.C.V: 322,220

(16) Porches/Decks

Area	Type
80	Composite
218	Composite

(17) Garage

Year Built:
Car Capacity:
Class: C
Exterior: Siding
Brick Ven.: 0
Stone Ven.: 0
Common Wall: 1 Wall
Foundation: 42 Inch
Finished ?:
Auto. Doors: 0
Mech. Doors: 0
Area: 624
% Good: 0
Storage Area: 0
No Conc. Floor: 0

Bsmnt Garage:

Carport Area:
Roof:

Cost Est. for Res. Bldg: 1 Single Family PLAIN Cls C Blt 2001
(11) Heating System: Forced Air w/ Ducts
Ground Area = 1690 SF Floor Area = 1690 SF.
Phy/Ab.Phy/Func/Econ/Comb. % Good=76/100/100/100/76
Building Areas

Stories	Exterior	Foundation	Size	Cost New	Depr. Cost
1 Story	Siding	Basement	1,690		
			Total:	240,461	182,751
Other Additions/Adjustments					
Exterior					
Stone Veneer			208	7,952	6,044
Basement, Outside Entrance, Below Grade			1	2,578	1,959
Water/Sewer					
1000 Gal Septic			1	4,899	3,723
Water Well, 100 Feet			1	5,849	4,445
Garages					
Class: C Exterior: Siding Foundation: 42 Inch (Unfinished)					
Base Cost			624	26,401	20,065
Common Wall: 1 Wall			1	-2,705	-2,056
Class: CD Exterior: Pole (Unfinished)					
Base Cost			1200	26,100	19,836
Fireplaces					
Direct-Vented Gas			1	3,043	2,313
Deck					
Composite w/Roof (Deck Portion)			80	2,370	1,801
Composite w/Roof (Roof portion)			80	1,519	1,154
Composite w/Roof (Deck Portion)			218	4,480	3,405
Composite w/Roof (Roof portion)			218	3,641	2,767
Lump Sum Items					
PLAY AREA FOR KIDS				300	228

<<<<< Calculations too long. See Valuation printout for complete pricing. >>>>>

*** Information herein deemed reliable but not guaranteed***

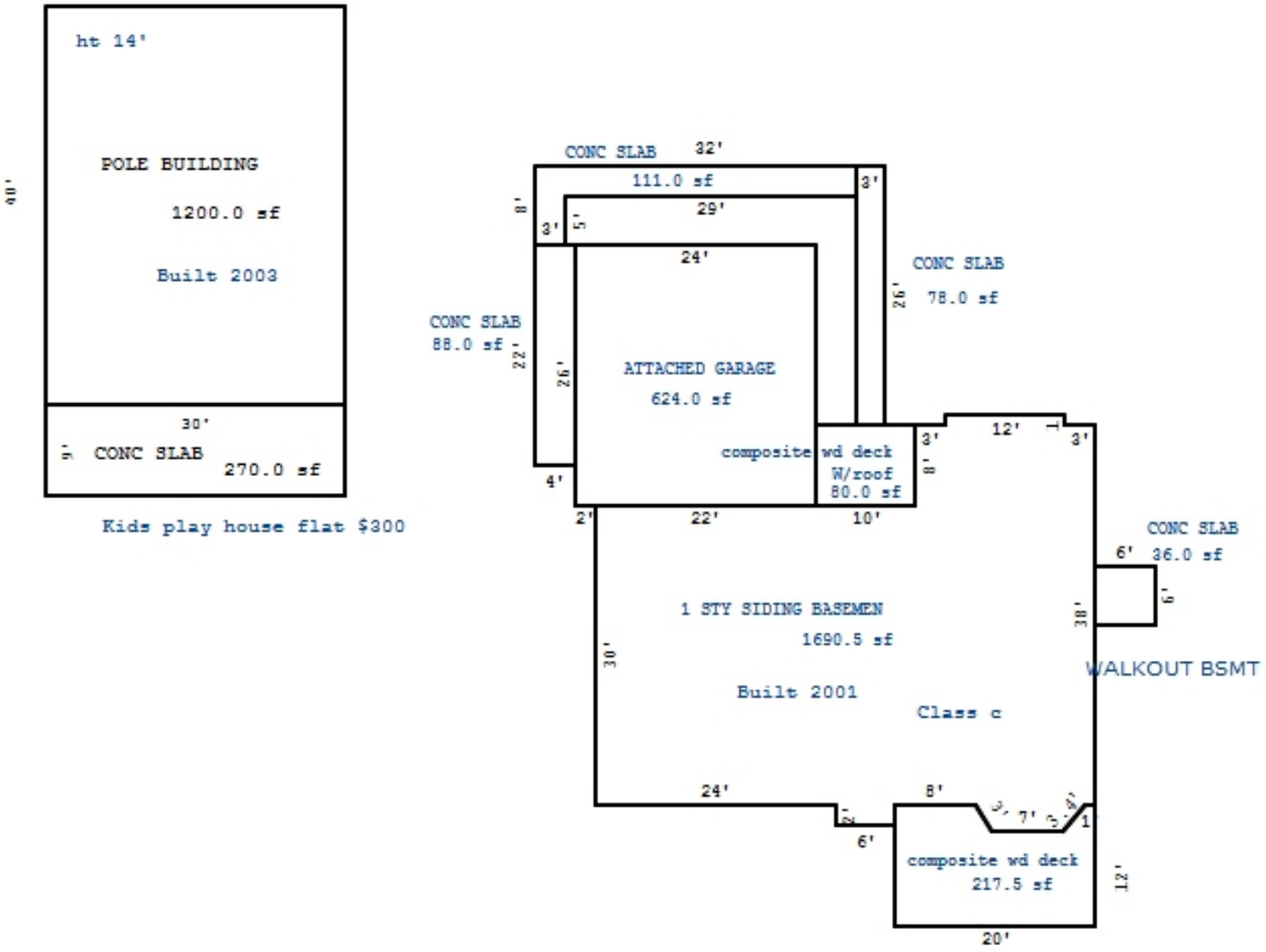

Sketch by Apex Sketch

*** Information herein deemed reliable but not guaranteed***

Parcel Number: 2410-27-3401 Jurisdiction: GREENWOOD TWP County: WEXFORD Printed on 02/15/2024

Grantor	Grantee	Sale Price	Sale Date	Inst. Type	Terms of Sale	Liber & Page	Verified By	Prcnt. Trans.
MUNDY, GERALD JR.	HILDEBRANT, GEORGE B.	39,500	06/29/1988	WD	03-ARM'S LENGTH	311:726	DEED	0.0

Property Address
3351 E 12 RD

Owner's Name/Address
HILDEBRANT, GEORGE B.
& CHRISTINE A.
3351 E 12 RD
MANTON MI 49663

Tax Description
SE 1/4 OF SW 1/4 40 A. GW. SEC. 27 T24N R10W -MANTON-

Comments/Influences

Class: RESIDENTIAL-IMPROV Zoning:
School: MANTON CONSOLIDATED SCHOOLS
P.R.E. 100% / /
:
2024 Est TCV 313,924 TCV/TFA: 171.36

Building Permit(s)	Date	Number	Status
RESIDENTIAL - NEW	04/24/2003	PM6672	
RESIDENTIAL - REMODEL	09/25/2001	PE13997	
RESIDENTIAL - REMODEL	06/19/2001	PB10359	

X Improved | Vacant

	Public Improvements
	Dirt Road
X	Gravel Road
	Paved Road
	Storm Sewer
	Sidewalk
	Water
	Sewer
X	Electric
	Gas
	Curb
	Street Lights
	Standard Utilities
	Underground Utils.

	Topography of Site
	Level
X	Rolling
	Low
	High
	Landscaped
	Swamp
X	Wooded
	Pond
	Waterfront
	Ravine
	Wetland
	Flood Plain

Who	When	What
GLA	07/10/2019	INSPECTION
GLA	07/10/2019	INSPECTION
GLA	06/22/2015	INSPECTION

The Equalizer. Copyright (c) 1999 - 2009.
Licensed To: Township of Greenwood, County of Wexford, Michigan

Land Value Estimates for Land Table 4010.LAND VALUES

Description	Frontage	Depth	* Factors * Front	Depth	Rate	%Adj.	Reason	Value
ACREAGE			39.020 Acres		2,722	100		106,212
ROW			0.980 Acres		0	100		0
			40.00 Total Acres		Total Est. Land Value =			106,212

Land Improvement Cost Estimates

Description	Rate	Size	% Good	Cash Value
D/W/P: 3.5 Concrete	5.82	3752	51	11,137
Total Estimated Land Improvements True Cash Value =				11,137

Year	Land Value	Building Value	Assessed Value	Board of Review	Tribunal/ Other	Taxable Value
2024	53,100	103,900	157,000			39,685C
2023	47,000	86,000	133,000			37,796C
2022	37,400	73,500	110,900			35,997C
2021	33,300	74,500	107,800			34,848C

*** Information herein deemed reliable but not guaranteed***

Building Type

X	Single Family
	Mobile Home
	Town Home
	Duplex
	A-Frame
X	Wood Frame

Building Style: PLAIN

Yr Built	Remodeled
0	0

Condition: Good

Room List

	Basement
	1st Floor
	2nd Floor
	Bedrooms

(1) Exterior

X	Wood/Shingle
	Aluminum/Vinyl
	Brick
X	Insulation

(2) Windows

X	Many Avg. Few	X	Large Avg. Small

	Wood Sash
	Metal Sash
X	Vinyl Sash
	Double Hung
	Horiz. Slide
	Casement
	Double Glass
	Patio Doors
X	Storms & Screens

(3) Roof

X	Gable		Gambrel
	Hip		Mansard
	Flat		Shed

X	Asphalt Shingle

Chimney:

(3) Roof (cont.)

	Eavestrough
X	Insulation
0	Front Overhang
0	Other Overhang

(4) Interior

X	Drywall Paneled		Plaster Wood T&G

Trim & Decoration

	Ex	X	Ord		Min

Size of Closets

	Lg	X	Ord		Small

Doors: | | Solid | X | H.C.

(5) Floors

Kitchen:
Other: Linoleum
Other: Carpeted

(6) Ceilings

X	Drywall		

(7) Excavation

Basement: 180 S.F.
Crawl: 908 S.F.
Slab: 168 S.F.
Height to Joists: 0.0

(8) Basement

	Conc. Block
	Poured Conc.
	Stone
	Treated Wood
	Concrete Floor

(9) Basement Finish

	Recreation	SF
	Living	SF
	Walkout Doors (B)	
	No Floor	SF
	Walkout Doors (A)	

(10) Floor Support

Joists:
Unsupported Len:
Cntr.Sup:

(11) Heating/Cooling

X	Gas		Oil		Elec.
	Wood		Coal		Steam

	Forced Air w/o Ducts
X	Forced Air w/ Ducts
	Forced Hot Water
	Electric Baseboard
	Elec. Ceil. Radiant
	Radiant (in-floor)
	Electric Wall Heat
	Space Heater
	Wall/Floor Furnace
	Forced Heat & Cool
	Heat Pump
	No Heating/Cooling

	Central Air
	Wood Furnace

(12) Electric

150	Amps Service

No./Qual. of Fixtures

	Ex.	X	Ord.		Min

No. of Elec. Outlets

	Many	X	Ave.		Few

(13) Plumbing

2	Average Fixture(s)
	3 Fixture Bath
	2 Fixture Bath
	Softener, Auto
	Softener, Manual
	Solar Water Heat
	No Plumbing
	Extra Toilet
	Extra Sink
	Separate Shower
	Ceramic Tile Floor
	Ceramic Tile Wains
	Ceramic Tub Alcove
	Vent Fan

(14) Water/Sewer

	Public Water
	Public Sewer
1	Water Well
1	1000 Gal Septic
	2000 Gal Septic

Lump Sum Items:

(15) Built-ins

	Appliance Allow.
	Cook Top
	Dishwasher
	Garbage Disposal
	Bath Heater
	Vent Fan
	Hot Tub
	Unvented Hood
	Vented Hood
	Intercom
	Jacuzzi Tub
	Jacuzzi repl.Tub
	Oven
	Microwave
	Standard Range
	Self Clean Range
	Sauna
	Trash Compactor
	Central Vacuum
	Security System

(15) Fireplaces

	Interior 1 Story
	Interior 2 Story
	2nd/Same Stack
	Two Sided
	Exterior 1 Story
	Exterior 2 Story
	Prefab 1 Story
	Prefab 2 Story
	Heat Circulator
	Raised Hearth
	Wood Stove
	Direct-Vented Gas

Class: D
Effec. Age: 49
Floor Area: 1,832
Total Base New : 297,181 E.C.F.
Total Depr Cost: 151,561 X 1.297
Estimated T.C.V: 196,575

(16) Porches/Decks

Area	Type
175	CCP (1 Story)
64	CCP (2 Story)

(17) Garage

Year Built:
Car Capacity:
Class: D
Exterior: Siding
Brick Ven.: 0
Stone Ven.: 0
Common Wall: Detache
Foundation: 18 Inch
Finished ?:
Auto. Doors: 0
Mech. Doors: 0
Area: 2188
% Good: 0
Storage Area: 0
No Conc. Floor: 0

Bsmnt Garage:

Carport Area:
Roof:

Cost Est. for Res. Bldg: 1 Single Family PLAIN Cls D Blt 0
(11) Heating System: Forced Air w/ Ducts
Ground Area = 1256 SF Floor Area = 1832 SF.
Phy/Ab.Phy/Func/Econ/Comb. % Good=51/100/100/100/51
Building Areas

Stories	Exterior	Foundation	Size	Cost New	Depr. Cost
1.75 Story	Siding	Crawl Space	768		
1 Story	Siding	Basement	180		
1 Story	Siding	Slab	168		
1 Story	Siding	Crawl Space	140		
			Total:	180,584	92,097
Other Additions/Adjustments					
Plumbing					
3 Fixture Bath			1	3,268	1,667
Water/Sewer					
1000 Gal Septic			1	4,293	2,189
Water Well, 100 Feet			1	5,545	2,828
Porches					
CCP (1 Story)			175	3,934	2,006
CCP (2 Story)			64	1,951	995
Garages					
Class: D Exterior: Pole (Unfinished)					
Base Cost			962	19,375	9,881
Storage Over Garage			480	5,117	2,610
No Concrete Floor			962	-5,397	-2,752
Class: D Exterior: Siding Foundation: 18 Inch (Unfinished)					
Base Cost			2188	56,078	28,600
Class: D Exterior: Pole (Unfinished)					
Base Cost			1280	24,614	12,553
No Concrete Floor			1280	-7,181	-3,662

<<<<< Calculations too long. See Valuation printout for complete pricing. >>>>>

*** Information herein deemed reliable but not guaranteed***

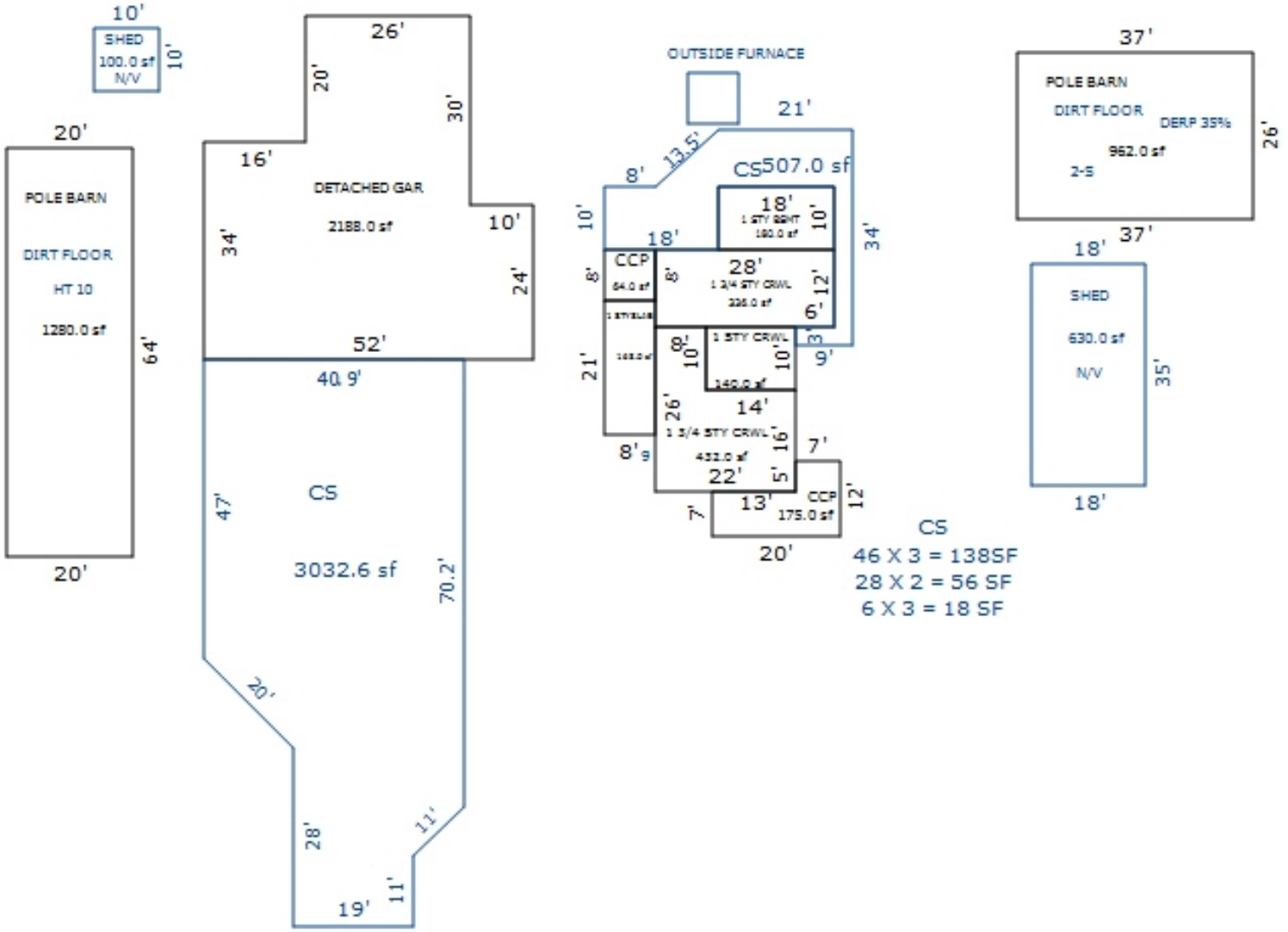

Sketch by Apex Sketch

*** Information herein deemed reliable but not guaranteed***

Parcel Number: 2410-27-4101 Jurisdiction: GREENWOOD TWP County: WEXFORD Printed on 02/15/2024

Grantor	Grantee	Sale Price	Sale Date	Inst. Type	Terms of Sale	Liber & Page	Verified By	Prcnt. Trans.

Property Address	Class: RESIDENTIAL-IMPROV	Zoning:	Building Permit(s)	Date	Number	Status
7405 N 33 RD	School: MANTON CONSOLIDATED SCHOOLS		RESIDENTIAL - NEW	06/21/2004	PB12288	
	P.R.E. 100% / /		RESIDENTIAL - NEW	02/03/1998	PM2097	
Owner's Name/Address	:		RESIDENTIAL - NEW	11/05/1997	PM1068	
JENSEN, JACKIE E. & TONI J. 7405 N 33 RD MANTON MI 49663	2024 Est TCV 289,140 TCV/TFA: 133.49					

X Improved | Vacant

Land Value Estimates for Land Table 4010.LAND VALUES

Description	Frontage	Depth	* Factors * Front	Depth	Rate	%Adj.	Reason	Value
ACREAGE			29.270 Acres		2,722	100		79,673
ROW			0.730 Acres		0	100		0
			30.00 Total Acres		Total Est. Land Value =			79,673

Land Improvement Cost Estimates

Description	Rate	Size	% Good	Cash Value
D/W/P: 3.5 Concrete	6.63	584	46	1,781
Total Estimated Land Improvements True Cash Value =				1,781

Public Improvements

	Dirt Road
X	Gravel Road
	Paved Road
	Storm Sewer
	Sidewalk
	Water
	Sewer
X	Electric
	Gas
	Curb
	Street Lights
	Standard Utilities
	Underground Utils.

Topography of Site

	Level
X	Rolling
	Low
X	High
	Landscaped
	Swamp
X	Wooded
	Pond
	Waterfront
	Ravine
	Wetland
	Flood Plain
X	OPEN

Tax Description

N 3/4 OF NE 1/4 OF SE 1/4 30 A. M/L GW. SEC. 27 T24N R10W -MANTON-

Comments/Influences

Who	When	What
GLA	07/10/2019	INSPECTION
GLA	07/10/2019	INSPECTION
GLA	03/22/2014	INSPECTION

Year	Land Value	Building Value	Assessed Value	Board of Review	Tribunal/ Other	Taxable Value
2024	39,800	104,800	144,600			61,367C
2023	36,600	86,200	122,800			58,445C
2022	30,900	73,400	104,300			55,662C
2021	26,700	74,700	101,400			53,884C

The Equalizer. Copyright (c) 1999 - 2009.
Licensed To: Township of Greenwood, County of Wexford, Michigan

*** Information herein deemed reliable but not guaranteed***

Building Type

X	Single Family
	Mobile Home
	Town Home
	Duplex
	A-Frame
X	Wood Frame

Building Style: PLAIN

Yr Built	Remodeled
1977	0

Condition: Good

Room List

	Basement
	1st Floor
	2nd Floor
	Bedrooms

(1) Exterior

X	Wood/Shingle
	Aluminum/Vinyl
	Brick
X	Insulation

(2) Windows

	Many		Large
X	Avg.	X	Avg.
	Few		Small

X	Wood Sash
	Metal Sash
	Vinyl Sash
	Double Hung
	Horiz. Slide
	Casement
	Double Glass
	Patio Doors
X	Storms & Screens

(3) Roof

X	Gable		Gambrel
	Hip		Mansard
	Flat		Shed

X	Asphalt Shingle

Chimney:

(3) Roof (cont.)

	Eavestrough
X	Insulation
0	Front Overhang
0	Other Overhang

(4) Interior

X	Drywall		Plaster
	Paneled		Wood T&G

Trim & Decoration

	Ex	X	Ord		Min

Size of Closets

	Lg	X	Ord		Small

Doors:		Solid	X	H.C.	

(5) Floors

Kitchen:
Other: Linoleum
Other: Carpeted

(6) Ceilings

X	Drywall

(7) Excavation

Basement: 1828 S.F.
Crawl: 0 S.F.
Slab: 338 S.F.
Height to Joists: 0.0

(8) Basement

	Conc. Block
	Poured Conc.
	Stone
	Treated Wood
	Concrete Floor

(9) Basement Finish

	Recreation SF
	Living SF
	Walkout Doors (B)
	No Floor SF
	Walkout Doors (A)

(10) Floor Support

Joists:
Unsupported Len:
Cntr.Sup:

(11) Heating/Cooling

X	Gas		Oil		Elec.
	Wood		Coal		Steam

	Forced Air w/o Ducts
X	Forced Air w/ Ducts
	Forced Hot Water
	Electric Baseboard
	Elec. Ceil. Radiant
	Radiant (in-floor)
	Electric Wall Heat
	Space Heater
	Wall/Floor Furnace
	Forced Heat & Cool
	Heat Pump
	No Heating/Cooling

	Central Air
	Wood Furnace

(12) Electric

150	Amps Service

No./Qual. of Fixtures

	Ex.	X	Ord.		Min

No. of Elec. Outlets

	Many	X	Ave.		Few

(13) Plumbing

	Average Fixture(s)
1	3 Fixture Bath
	2 Fixture Bath
	Softener, Auto
	Softener, Manual
	Solar Water Heat
	No Plumbing
	Extra Toilet
	Extra Sink
	Separate Shower
	Ceramic Tile Floor
	Ceramic Tile Wains
	Ceramic Tub Alcove
	Vent Fan

(14) Water/Sewer

	Public Water
	Public Sewer
1	Water Well
1	1000 Gal Septic
	2000 Gal Septic

Lump Sum Items:

(15) Built-ins

	Appliance Allow.
	Cook Top
	Dishwasher
	Garbage Disposal
	Bath Heater
	Vent Fan
	Hot Tub
	Unvented Hood
	Vented Hood
	Intercom
	Jacuzzi Tub
	Jacuzzi repl.Tub
	Oven
	Microwave
	Standard Range
	Self Clean Range
	Sauna
	Trash Compactor
	Central Vacuum
	Security System

(15) Fireplaces

	Interior 1 Story
	Interior 2 Story
	2nd/Same Stack
	Two Sided
	Exterior 1 Story
	Exterior 2 Story
	Prefab 1 Story
	Prefab 2 Story
	Heat Circulator
	Raised Hearth
	Wood Stove
	Direct-Vented Gas

Class: CD
Effec. Age: 54
Floor Area: 2,166
Total Base New : 348,104 E.C.F.
Total Depr Cost: 160,128 X 1.297
Estimated T.C.V: 207,686

(16) Porches/Decks

Area	Type
398	WPP
20	CCP (1 Story)
354	CCP (1 Story)
99	Treated Wood

(17) Garage

Year Built:
Car Capacity:
Class: CD
Exterior: Pole
Brick Ven.: 0
Stone Ven.: 0
Common Wall: Detache
Foundation: 18 Inch
Finished ?:
Auto. Doors: 0
Mech. Doors: 0
Area: 1920
% Good: 0
Storage Area: 0
No Conc. Floor: 1920

Bsmnt Garage:

Carport Area:
Roof:

Cost Est. for Res. Bldg: 1 Single Family PLAIN Cls CD Blt 1977
(11) Heating System: Forced Air w/ Ducts
Ground Area = 2166 SF Floor Area = 2166 SF.
Phy/Ab.Phy/Func/Econ/Comb. % Good=46/100/100/100/46
Building Areas

Stories	Exterior	Foundation	Size	Cost New	Depr. Cost
1 Story	Siding	Basement	1,828		
1 Story	Siding	Slab	338		
			Total:	255,601	117,576
Other Additions/Adjustments					
Water/Sewer					
1000 Gal Septic			1	4,582	2,108
Water Well, 100 Feet			1	5,680	2,613
Porches					
WPP			398	5,946	2,735
CCP (1 Story)			354	7,940	3,652
CCP (1 Story)			20	949	437
Deck					
Treated Wood			99	2,497	1,149
Garages					
Class: CD Exterior: Pole (Unfinished)					
Base Cost			960	21,907	10,077
Class: D Exterior: Pole (Unfinished)					
Base Cost			880	17,987	8,274
No Concrete Floor			880	-4,937	-2,271
Class: CD Exterior: Pole (Unfinished)					
Base Cost			1920	41,760	19,210
No Concrete Floor			1920	-11,808	-5,432
			Totals:	348,104	160,128

Notes:
ECF (RESIDENTIAL) 1.297 => TCV: 207,686

*** Information herein deemed reliable but not guaranteed***

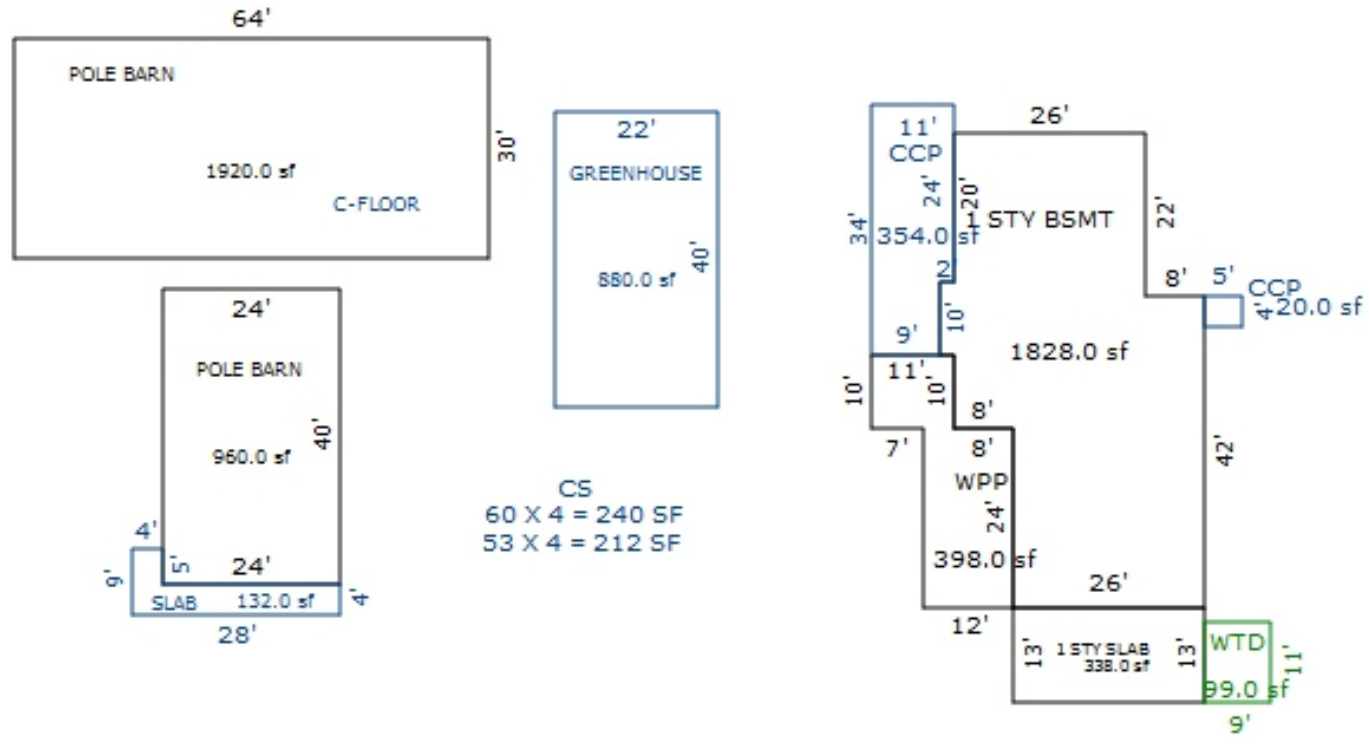

Sketch by Apex Sketch

*** Information herein deemed reliable but not guaranteed***

Parcel Number: 2410-27-4201 Jurisdiction: GREENWOOD TWP County: WEXFORD Printed on 02/15/2024

Grantor	Grantee	Sale Price	Sale Date	Inst. Type	Terms of Sale	Liber & Page	Verified By	Prcnt. Trans.
AUSTIN, LINDA M	AUSTIN, LINDA M	0	10/25/2019	WD	18-LIFE ESTATE	686/283	DEED	0.0
SIMS, VIVIAN V.	AUSTIN, DAVID F.	32,000	10/21/1992	WD	03-ARM'S LENGTH	331:874	DEED	0.0

Property Address

Owner's Name/Address

AUSTIN, LINDA M
3630 E 12 RD
MANTON MI 49663

Tax Description

W 1/2 OF SE 1/4 80 A. GW. SEC. 27 T24N R10W -MANTON-

Comments/Influences

Class: RESIDENTIAL-VACANT Zoning:

School: MANTON CONSOLIDATED SCHOOLS

P.R.E. 0%

:

2024 Est TCV 201,047

Building Permit(s)	Date	Number	Status

[ ] Improved [X] Vacant

Land Value Estimates for Land Table 4010.LAND VALUES

Description	Frontage	Depth	* Factors * Front	Depth	Rate	%Adj.	Reason	Value
ACREAGE			79.020 Acres		2,544	100		201,047
ROW			0.980 Acres		0	100		0
			80.00 Total Acres		Total Est. Land Value =			201,047

Public Improvements

- [ ] Dirt Road
- [X] Gravel Road
- [ ] Paved Road
- [ ] Storm Sewer
- [ ] Sidewalk
- [ ] Water
- [ ] Sewer
- [X] Electric
- [ ] Gas
- [ ] Curb
- [ ] Street Lights
- [ ] Standard Utilities
- [ ] Underground Utils.

Topography of Site

- [ ] Level
- [X] Rolling
- [ ] Low
- [ ] High
- [ ] Landscaped
- [ ] Swamp
- [X] Wooded
- [ ] Pond
- [ ] Waterfront
- [ ] Ravine
- [ ] Wetland
- [ ] Flood Plain
- [X] OPEN/PINES

Who	When	What
GLA	07/10/2019	INSPECTION
GLA	07/10/2019	INSPECTION

Year	Land Value	Building Value	Assessed Value	Board of Review	Tribunal/ Other	Taxable Value
2024	100,500	0	100,500			31,744C
2023	85,100	0	85,100			30,233C
2022	67,200	0	67,200			28,794C
2021	61,400	0	61,400			27,875C

The Equalizer. Copyright (c) 1999 - 2009. Licensed To: Township of Greenwood, County of Wexford, Michigan

*** Information herein deemed reliable but not guaranteed***

Parcel Number: 2410-27-4401 Jurisdiction: GREENWOOD TWP County: WEXFORD Printed on 02/15/2024

Grantor	Grantee	Sale Price	Sale Date	Inst. Type	Terms of Sale	Liber & Page	Verified By	Prcnt. Trans.
BELTZ, DEBORAH & CHARLES L	MATTESON, LOIS K	0	08/04/2021	PTA	09-FAMILY	PTA	DEED	0.0
BELTZ, DEBORAH	BELTZ, DEBORAH & CHARLES I	0	11/09/2020	QC	15-LADY BIRD	689/2446	AGENT	0.0
MATTESON, RAYMOND L. & LOI	MATTESIN, RAYMOND LE ETAL	0	02/12/2010	QC	09-FAMILY	627/2827	DEED	0.0

Property Address

Owner's Name/Address

MATTESON, LOIS K
2318 N 29 RD
CADILLAC MI 49601

Tax Description

S 5/8 OF E 1/2 OF SE 1/4 50 A. M/L GW. SEC. 27 T24N R10W -MANTON-

Comments/Influences

Class: RESIDENTIAL-IMPROV Zoning:

School: MANTON CONSOLIDATED SCHOOLS

P.R.E. 0%

:

2024 Est TCV 140,587 TCV/TFA: 295.35

Building Permit(s)	Date	Number	Status

X	Improved		Vacant

	Public Improvements
X	Dirt Road
X	Gravel Road
	Paved Road
	Storm Sewer
	Sidewalk
	Water
	Sewer
X	Electric
	Gas
	Curb
	Street Lights
	Standard Utilities
	Underground Utils.

	Topography of Site
	Level
X	Rolling
	Low
	High
	Landscaped
	Swamp
X	Wooded
	Pond
	Waterfront
	Ravine
	Wetland
	Flood Plain
X	OPEN/PINES

Who	When	What
GLA	07/10/2019	INSPECTION
GLA	07/10/2019	INSPECTION
GLA	03/22/2014	INSPECTION

Land Value Estimates for Land Table 4010.LAND VALUES

Description	Frontage	Depth	* Factors * Front	Depth	Rate	%Adj.	Reason	Value
ACREAGE			46.500 Acres		2,722	100		126,573
ROW			3.500 Acres		0	100		0
			50.00 Total Acres		Total Est. Land Value =			126,573

Year	Land Value	Building Value	Assessed Value	Board of Review	Tribunal/ Other	Taxable Value
2024	63,300	7,000	70,300			21,152C
2023	63,300	5,600	68,900			20,145C
2022	40,900	4,700	45,600			19,186C
2021	39,500	4,000	43,500			18,574C

The Equalizer. Copyright (c) 1999 - 2009.
Licensed To: Township of Greenwood, County of Wexford, Michigan

*** Information herein deemed reliable but not guaranteed***

Building Type

	Single Family
X	Mobile Home
	Town Home
	Duplex
	A-Frame

X	Wood Frame

Building Style: SWT/DWT

Yr Built	Remodeled
0	0

Condition: Good

Room List

	Basement
	1st Floor
	2nd Floor
	Bedrooms

(1) Exterior

	Wood/Shingle
X	Aluminum/Vinyl
	Brick
X	Insulation

(2) Windows

	Many		Large
X	Avg.	X	Avg.
	Few		Small

	Wood Sash
	Metal Sash
X	Vinyl Sash
	Double Hung
	Horiz. Slide
	Casement
	Double Glass
	Patio Doors
X	Storms & Screens

(3) Roof

X	Gable		Gambrel
	Hip		Mansard
	Flat		Shed

X	Asphalt Shingle

Chimney:

(3) Roof (cont.)

	Eavestrough
X	Insulation
0	Front Overhang
0	Other Overhang

(4) Interior

X	Drywall		Plaster
	Paneled		Wood T&G

Trim & Decoration

	Ex	X	Ord		Min

Size of Closets

	Lg	X	Ord		Small

Doors:		Solid	X	H.C.	

(5) Floors

Kitchen:
Other: Linoleum
Other: Carpeted

(6) Ceilings

X	Drywall		

(7) Excavation

Basement: 0 S.F.
Crawl: 0 S.F.
Slab: 0 S.F.
Height to Joists: 0.0

(8) Basement

	Conc. Block
	Poured Conc.
	Stone
	Treated Wood
	Concrete Floor

(9) Basement Finish

	Recreation SF
	Living SF
	Walkout Doors (B)
	No Floor SF
	Walkout Doors (A)

(10) Floor Support

Joists:
Unsupported Len:
Cntr.Sup:

(11) Heating/Cooling

X	Gas		Oil		Elec.
	Wood		Coal		Steam

X	Forced Warm Air
	Wall Furnace
	Warm & Cool Air
	Heat Pump

	Central Air
	Wood Furnace

(12) Electric

150	Amps Service

No./Qual. of Fixtures

	Ex.	X	Ord.		Min

No. of Elec. Outlets

	Many	X	Ave.		Few

(13) Plumbing

1	Average Fixture(s)
	3 Fixture Bath
	2 Fixture Bath
	Softener, Auto
	Softener, Manual
	Solar Water Heat
	No Plumbing
	Extra Toilet
	Extra Sink
	Separate Shower
	Ceramic Tile Floor
	Ceramic Tile Wains
	Ceramic Tub Alcove
	Vent Fan

(14) Water/Sewer

	Public Water
	Public Sewer
	Water Well
	1000 Gal Septic
	2000 Gal Septic

Lump Sum Items:

(15) Built-ins

	Appliance Allow.
	Cook Top
	Dishwasher
	Garbage Disposal
	Bath Heater
	Vent Fan
	Hot Tub
	Unvented Hood
	Vented Hood
	Intercom
	Jacuzzi Tub
	Jacuzzi repl.Tub
	Oven
	Microwave
	Standard Range
	Self Clean Range
	Sauna
	Trash Compactor
	Central Vacuum
	Security System

(15) Fireplaces

	Interior 1 Story
	Interior 2 Story
	2nd/Same Stack
	Two Sided
	Exterior 1 Story
	Exterior 2 Story
	Prefab 1 Story
	Prefab 2 Story
	Heat Circulator
	Raised Hearth
	Wood Stove
	Direct-Vented Gas

Class: Fair
Effec. Age: 25
Floor Area:
Total Base New : 30,875 E.C.F.
Total Depr Cost: 10,805 X 1.297
Estimated T.C.V: 14,014

(16) Porches/Decks

Area	Type
18	WCP (1 Story)

(17) Garage

Year Built:
Car Capacity:
Class:
Exterior:
Brick Ven.:
Stone Ven.:
Common Wall:
Foundation:
Finished ?:
Auto. Doors:
Mech. Doors:
Area:
% Good:
Storage Area:
No Conc. Floor:

Bsmnt Garage:

Carport Area:
Roof:

Cost Est. for Res. Bldg: 1 Mobile Home SWT/DWT Cls Fair Blt 0
(11) Heating System: Wall Furnace
Ground Area = 476 SF Floor Area = 476 SF.
Phy/Ab.Phy/Func/Econ/Comb. % Good=35/100/100/100/35
Building Areas

Type	Ext. Walls	Roof/Fnd.	Size	Cost New	Depr. Cost
Main Home	Ribbed	Metal	476		
			Total:	28,434	9,951
Other Additions/Adjustments					
Skirting, Metal or Vinyl, Vertical			104	1,160	406
Porches					
WCP (1 Story)			18	1,281	448
			Totals:	30,875	10,805

Notes:

ECF (RESIDENTIAL) 1.297 => TCV: 14,014

*** Information herein deemed reliable but not guaranteed***

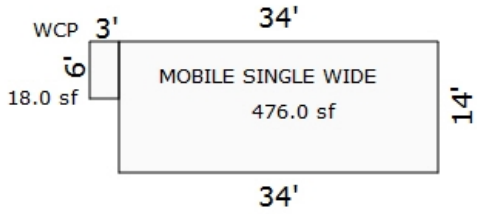

Sketch by Apex Sketch

*** Information herein deemed reliable but not guaranteed***

Parcel Number: 2410-28-1101 Jurisdiction: GREENWOOD TWP County: WEXFORD Printed on 02/15/2024

Grantor	Grantee	Sale Price	Sale Date	Inst. Type	Terms of Sale	Liber & Page	Verified By	Prcnt. Trans.

Property Address	Class: AGRICULTURAL-VACAN	Zoning:	Building Permit(s)	Date	Number	Status
	School: MANTON CONSOLIDATED SCHOOLS					
Owner's Name/Address	P.R.E. 0%					
	:					
STATE OF MICHIGAN P O BOX 30735 GRANTS ADMINISTRATION LANSING MI 48909-8235	2024 Est TCV 0					

Tax Description

ENTIRE SEC. 28 EXC SW 1/4 OF SW 1/4 & EXC E 1/2 OF SE 1/4 --520 A.-- GW. SEC. 28 T24N R10W -MANTON-

Comments/Influences

	Improved	X	Vacant

	Public Improvements
X	Dirt Road
	Gravel Road
	Paved Road
	Storm Sewer
	Sidewalk
	Water
	Sewer
X	Electric
	Gas
	Curb
	Street Lights
	Standard Utilities
	Underground Utils.

	Topography of Site
	Level
X	Rolling
X	Low
	High
	Landscaped
X	Swamp
X	Wooded
	Pond
	Waterfront
	Ravine
	Wetland
	Flood Plain
X	OPEN

Who	When	What
GLA	07/10/2019	INSPECTION
GLA	07/10/2019	INSPECTION

Land Value Estimates for Land Table 4010.LAND VALUES

Description	Frontage	Depth	* Factors * Front	Depth	Rate	%Adj.	Reason	Value
ACREAGE			520.000 Acres		2,480	100		1,289,600
			520.00 Total Acres		Total Est. Land Value =			1,289,600

Year	Land Value	Building Value	Assessed Value	Board of Review	Tribunal/ Other	Taxable Value
2024	EXEMPT	EXEMPT	EXEMPT			EXEMPT
2023	EXEMPT	EXEMPT	EXEMPT			EXEMPT
2022	0	0	0			0
2021	0	0	0			0

The Equalizer. Copyright (c) 1999 - 2009. Licensed To: Township of Greenwood, County of Wexford, Michigan

*** Information herein deemed reliable but not guaranteed***

Parcel Number: 2410-28-3301 Jurisdiction: GREENWOOD TWP County: WEXFORD Printed on 02/15/2024

Grantor	Grantee	Sale Price	Sale Date	Inst. Type	Terms of Sale	Liber & Page	Verified By	Prcnt. Trans.
BROOKS, JOSEPH A	DEYMAN, DONALD J & LYNN E	145,000	08/11/2021	WD	03-ARM'S LENGTH	690/2374	DEED	100.0
LUX, EVELYN L.	BROOKS, JOSEPH A	85,000	07/03/2018	WD	03-ARM'S LENGTH	6822/937	DEED	100.0

Property Address

2137 E 12 RD

Owner's Name/Address

DEYMAN, DONALD J & LYNN E
1121 W AVERY CT
GRAND RAPIDS MI 49534

Tax Description

SW 1/4 OF SW 1/4 EXC E 209 FT OF S 209 FT. --39 A. -- GW. SEC. 28 T24N R10W -MANTON-

Comments/Influences

Class: RESIDENTIAL-IMPROV Zoning:

School: MANTON CONSOLIDATED SCHOOLS

P.R.E. 0%

:

2024 Est TCV 167,863 TCV/TFA: 218.57

Building Permit(s)	Date	Number	Status

X Improved | Vacant

	Public Improvements
X	Dirt Road
	Gravel Road
	Paved Road
	Storm Sewer
	Sidewalk
	Water
	Sewer
X	Electric
	Gas
	Curb
	Street Lights
	Standard Utilities
	Underground Utils.

	Topography of Site
	Level
X	Rolling
X	Low
	High
	Landscaped
X	Swamp
X	Wooded
	Pond
	Waterfront
	Ravine
	Wetland
	Flood Plain
X	OPEN

Who	When	What
GLA	07/10/2019	INSPECTION
GLA	07/10/2019	INSPECTION

Land Value Estimates for Land Table 4010.LAND VALUES

Description	Frontage	Depth	* Factors * Front	Depth	Rate	%Adj.	Reason	Value
ACREAGE			39.000	Acres	2,722	100		106,158
			39.00	Total Acres			Total Est. Land Value =	106,158

Land Improvement Cost Estimates

Description	Rate	Size	% Good	Cash Value
D/W/P: 3.5 Concrete	5.82	87	31	157
Total Estimated Land Improvements True Cash Value =				157

Year	Land Value	Building Value	Assessed Value	Board of Review	Tribunal/ Other	Taxable Value
2024	53,100	30,800	83,900			64,827C
2023	47,000	25,300	72,300			61,740C
2022	37,400	21,400	58,800			58,800S
2021	33,300	21,800	55,100			54,556C

The Equalizer. Copyright (c) 1999 - 2009. Licensed To: Township of Greenwood, County of Wexford, Michigan

*** Information herein deemed reliable but not guaranteed***

Building Type

X	Single Family
	Mobile Home
	Town Home
	Duplex
	A-Frame
X	Wood Frame

Building Style: PLAIN

Yr Built	Remodeled
1951	1975

Condition: Good

Room List

	Basement
	1st Floor
	2nd Floor
	Bedrooms

(1) Exterior

X	Wood/Shingle
	Aluminum/Vinyl
	Brick
X	Insulation

(2) Windows

X	Many Avg. Few	X	Large Avg. Small

X	Wood Sash
	Metal Sash
	Vinyl Sash
	Double Hung
	Horiz. Slide
	Casement
	Double Glass
	Patio Doors
X	Storms & Screens

(3) Roof

X	Gable		Gambrel
	Hip		Mansard
	Flat		Shed

X	Asphalt Shingle

Chimney:

(3) Roof (cont.)

	Eavestrough
X	Insulation
0	Front Overhang
0	Other Overhang

(4) Interior

X	Drywall Paneled		Plaster Wood T&G

Trim & Decoration

	Ex	X	Ord		Min

Size of Closets

	Lg	X	Ord		Small

Doors:		Solid	X	H.C.	

(5) Floors

Kitchen:
Other: Linoleum
Other: Carpeted

(6) Ceilings

X	Drywall

(7) Excavation

Basement: 0 S.F.
Crawl: 0 S.F.
Slab: 768 S.F.
Height to Joists: 0.0

(8) Basement

	Conc. Block
	Poured Conc.
	Stone
	Treated Wood
	Concrete Floor

(9) Basement Finish

	Recreation SF
	Living SF
	Walkout Doors (B)
	No Floor SF
	Walkout Doors (A)

(10) Floor Support

Joists:
Unsupported Len:
Cntr.Sup:

(11) Heating/Cooling

X	Gas Wood		Oil Coal		Elec. Steam

	Forced Air w/o Ducts
X	Forced Air w/ Ducts
	Forced Hot Water
	Electric Baseboard
	Elec. Ceil. Radiant
	Radiant (in-floor)
	Electric Wall Heat
	Space Heater
	Wall/Floor Furnace
	Forced Heat & Cool
	Heat Pump
	No Heating/Cooling

	Central Air
	Wood Furnace

(12) Electric

150	Amps Service

No./Qual. of Fixtures

	Ex.	X	Ord.		Min

No. of Elec. Outlets

	Many	X	Ave.		Few

(13) Plumbing

1	Average Fixture(s)
	3 Fixture Bath
	2 Fixture Bath
	Softener, Auto
	Softener, Manual
	Solar Water Heat
	No Plumbing
	Extra Toilet
	Extra Sink
	Separate Shower
	Ceramic Tile Floor
	Ceramic Tile Wains
	Ceramic Tub Alcove
	Vent Fan

(14) Water/Sewer

	Public Water
	Public Sewer
1	Water Well
	1000 Gal Septic
	2000 Gal Septic

Lump Sum Items:

(15) Built-ins

	Appliance Allow.
	Cook Top
	Dishwasher
	Garbage Disposal
	Bath Heater
	Vent Fan
	Hot Tub
	Unvented Hood
	Vented Hood
	Intercom
	Jacuzzi Tub
	Jacuzzi repl.Tub
	Oven
	Microwave
	Standard Range
	Self Clean Range
	Sauna
	Trash Compactor
	Central Vacuum
	Security System

(15) Fireplaces

	Interior 1 Story
	Interior 2 Story
	2nd/Same Stack
	Two Sided
	Exterior 1 Story
	Exterior 2 Story
	Prefab 1 Story
	Prefab 2 Story
	Heat Circulator
	Raised Hearth
	Wood Stove
	Direct-Vented Gas

Class: D
Effec. Age: 48
Floor Area: 768
Total Base New : 91,258 E.C.F.
Total Depr Cost: 47,454 X 1.297
Estimated T.C.V: 61,548

(16) Porches/Decks

Area	Type

(17) Garage

Year Built:
Car Capacity:
Class:
Exterior:
Brick Ven.:
Stone Ven.:
Common Wall:
Foundation:
Finished ?:
Auto. Doors:
Mech. Doors:
Area:
% Good:
Storage Area:
No Conc. Floor:

Bsmnt Garage:

Carport Area:
Roof:

Cost Est. for Res. Bldg: 1 Single Family PLAIN Cls D Blt 1951
(11) Heating System: Forced Air w/ Ducts
Ground Area = 768 SF Floor Area = 768 SF.
Phy/Ab.Phy/Func/Econ/Comb. % Good=52/100/100/100/52
Building Areas

Stories	Exterior	Foundation	Size	Cost New	Depr. Cost
1 Story	Siding	Slab	768		
			Total:	85,713	44,571

Other Additions/Adjustments

Water/Sewer			
Water Well, 100 Feet	1	5,545	2,883
	Totals:	91,258	47,454

Notes:

ECF (RESIDENTIAL) 1.297 => TCV: 61,548

*** Information herein deemed reliable but not guaranteed***

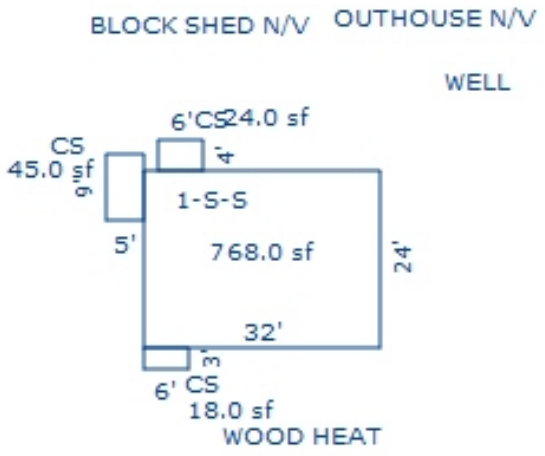

Sketch by Apex Sketch

*** Information herein deemed reliable but not guaranteed***

Parcel Number: 2410-28-3302 Jurisdiction: GREENWOOD TWP County: WEXFORD Printed on 02/15/2024

Grantor	Grantee	Sale Price	Sale Date	Inst. Type	Terms of Sale	Liber & Page	Verified By	Prcnt. Trans.
WETHERELL, NORA BARNES	WETHERELL, KIRK L & KEAGAN	0	11/07/2011	QC	09-FAMILY	643/1130	DEED	100.0

Property Address

2243 E 12 RD

Owner's Name/Address

WETHERELL, KIRK L &
KEAGAN J WETHERELL
620 E 32 RD
BOON MI 49618

Tax Description

E 209 FT OF S 209 FT OF SW 1/4 OF SW 1/4 --1 A. -- GW. SEC. 28 T24N R10W -MANTON-

Comments/Influences

The Equalizer. Copyright (c) 1999 - 2009. Licensed To: Township of Greenwood, County of Wexford, Michigan

Class: RESIDENTIAL-IMPROV Zoning:

School: MANTON CONSOLIDATED SCHOOLS

P.R.E. 0%

:

2024 Est TCV 12,197

Building Permit(s)	Date	Number	Status

[ ] Improved [X] Vacant

Public Improvements

X	Dirt Road
	Gravel Road
	Paved Road
	Storm Sewer
	Sidewalk
	Water
	Sewer
	Electric
	Gas
	Curb
	Street Lights
	Standard Utilities
	Underground Utils.

Topography of Site

	Level
X	Rolling
X	Low
	High
	Landscaped
X	Swamp
X	Wooded
	Pond
	Waterfront
	Ravine
	Wetland
	Flood Plain
X	OPEN/PINES

Who	When	What
GLA	07/10/2019	INSPECTION
GLA	07/10/2019	INSPECTION
GLA	03/22/2014	INSPECTION

Land Value Estimates for Land Table 4010.LAND VALUES

Description	Frontage	Depth	* Factors * Front	Depth	Rate	%Adj.	Reason	Value
ACREAGE			1.000	Acres	10,953	100		10,953
			1.00	Total Acres			Total Est. Land Value =	10,953

Land Improvement Cost Estimates

Description	Rate	Size	% Good	Cash Value
Wood Frame	21.68	140	41	1,244
Total Estimated Land Improvements True Cash Value =				1,244

Year	Land Value	Building Value	Assessed Value	Board of Review	Tribunal/ Other	Taxable Value
2024	5,500	600	6,100			2,850C
2023	3,000	600	3,600			2,715C
2022	2,500	500	3,000			2,586C
2021	3,000	500	3,500			2,504C

*** Information herein deemed reliable but not guaranteed***

Parcel Number: 2410-28-4101-01 Jurisdiction: GREENWOOD TWP County: WEXFORD Printed on 02/15/2024

Grantor	Grantee	Sale Price	Sale Date	Inst. Type	Terms of Sale	Liber & Page	Verified By	Prcnt. Trans.
FOOR, JAMES L.	FOOR REV TRUST	0	10/12/2023	WD	15-LADY BIRD	696/752	PROPERTY TRANSFER	0.0

Property Address

7463 N 31 RD

Owner's Name/Address

FOOR, JAMES L.
& CAROLYN SUE
7463 N 31 RD
MANTON MI 49663-9526

Tax Description

N 1/2 OF NE 1/4 OF SE 1/4 EXC THE N 361.5 FT OF W 361.5 FT THEREOF SUB TO A 20 FT EASMT 17 A. GW. SEC. 28 T24N R10W
-MANTON-
SPLIT/COMBINED ON 01/06/2022 FROM 2410-28-4101;

Comments/Influences

Split/Comb. on 01/06/2022 completed 01/06/2022 LINDA ;
Parent Parcel(s): 2410-28-4101;
Child Parcel(s): 2410-28-4101-01, 2410-28-4101-02;

The Equalizer. Copyright (c) 1999 - 2009. Licensed To: Township of Greenwood, County of Wexford, Michigan

Class: RESIDENTIAL-IMPROV Zoning:
School: MANTON CONSOLIDATED SCHOOLS
P.R.E. 100% / /
:
2024 Est TCV 112,934 TCV/TFA: 122.22

Building Permit(s)	Date	Number	Status

X Improved | Vacant

Public Improvements

- Dirt Road
- Gravel Road
- Paved Road
- Storm Sewer
- Sidewalk
- Water
- Sewer
- Electric
- Gas
- Curb
- Street Lights
- Standard Utilities
- Underground Utils.

Topography of Site

- Level
- Rolling
- Low
- High
- Landscaped
- Swamp
- Wooded
- Pond
- Waterfront
- Ravine
- Wetland
- Flood Plain

Who	When	What
GLA	10/31/2022	INSPECTION

Land Value Estimates for Land Table 4010.LAND VALUES

Description	Frontage	Depth	* Factors * Front	Depth	Rate	%Adj.	Reason	Value
ACREAGE			16.500 Acres		3,200	100		52,800
ROW			0.500 Acres		0	100		0
			17.00 Total Acres		Total Est. Land Value =			52,800

Land Improvement Cost Estimates

Description	Rate	Size	% Good	Cash Value
D/W/P: 3.5 Concrete	6.63	332	31	682
Wood Frame	26.52	160	31	1,315
Total Estimated Land Improvements True Cash Value =				1,997

Year	Land Value	Building Value	Assessed Value	Board of Review	Tribunal/ Other	Taxable Value
2024	26,400	30,100	56,500			28,630C
2023	21,500	24,400	45,900			27,267C
2022	18,700	20,500	39,200			25,969C
2021	0	0	0			0

*** Information herein deemed reliable but not guaranteed***

Building Type

	Single Family
X	Mobile Home
	Town Home
	Duplex
	A-Frame

X	Wood Frame

Building Style: SWT/DWT

Yr Built	Remodeled
0	0

Condition: Good

Room List

	Basement
	1st Floor
	2nd Floor
	Bedrooms

(1) Exterior

	Wood/Shingle
	Aluminum/Vinyl
	Brick
X	Insulation

(2) Windows

X	Many Avg. Few		Large Avg. Small

	Wood Sash
	Metal Sash
X	Vinyl Sash
	Double Hung
	Horiz. Slide
	Casement
	Double Glass
	Patio Doors
X	Storms & Screens

(3) Roof

X	Gable Hip Flat		Gambrel Mansard Shed

X	Asphalt Shingle

Chimney:

(3) Roof (cont.)

	Eavestrough
X	Insulation
0	Front Overhang
0	Other Overhang

(4) Interior

X	Drywall Paneled		Plaster Wood T&G

Trim & Decoration

	Ex	X	Ord		Min

Size of Closets

	Lg	X	Ord		Small

Doors:		Solid	X	H.C.	

(5) Floors

Kitchen:
Other: Linoleum
Other: Carpeted

(6) Ceilings

X	Drywall

(7) Excavation

Basement: 0 S.F.
Crawl: 0 S.F.
Slab: 0 S.F.
Height to Joists: 0.0

(8) Basement

	Conc. Block
	Poured Conc.
	Stone
	Treated Wood
	Concrete Floor

(9) Basement Finish

	Recreation SF
	Living SF
	Walkout Doors (B)
	No Floor SF
	Walkout Doors (A)

(10) Floor Support

Joists:
Unsupported Len:
Cntr.Sup:

(11) Heating/Cooling

X	Gas Wood		Oil Coal		Elec. Steam	

X	Forced Warm Air
	Wall Furnace
	Warm & Cool Air
	Heat Pump

	Central Air
	Wood Furnace

(12) Electric

150	Amps Service

No./Qual. of Fixtures

	Ex.	X	Ord.		Min

No. of Elec. Outlets

	Many	X	Ave.		Few

(13) Plumbing

	Average Fixture(s)
1	3 Fixture Bath
	2 Fixture Bath
	Softener, Auto
	Softener, Manual
	Solar Water Heat
	No Plumbing
	Extra Toilet
	Extra Sink
	Separate Shower
	Ceramic Tile Floor
	Ceramic Tile Wains
	Ceramic Tub Alcove
	Vent Fan

(14) Water/Sewer

	Public Water
	Public Sewer
1	Water Well
1	1000 Gal Septic
	2000 Gal Septic

Lump Sum Items:

(15) Built-ins

	Appliance Allow.
	Cook Top
	Dishwasher
	Garbage Disposal
	Bath Heater
	Vent Fan
	Hot Tub
	Unvented Hood
	Vented Hood
	Intercom
	Jacuzzi Tub
	Jacuzzi repl.Tub
	Oven
	Microwave
	Standard Range
	Self Clean Range
	Sauna
	Trash Compactor
	Central Vacuum
	Security System

(15) Fireplaces

	Interior 1 Story
	Interior 2 Story
	2nd/Same Stack
	Two Sided
	Exterior 1 Story
	Exterior 2 Story
	Prefab 1 Story
	Prefab 2 Story
	Heat Circulator
	Raised Hearth
	Wood Stove
	Direct-Vented Gas

Class: Fair
Effec. Age: 25
Floor Area:
Total Base New : 128,068 E.C.F.
Total Depr Cost: 44,824 X 1.297
Estimated T.C.V: 58,137

(16) Porches/Decks

Area	Type
96	WCP (1 Story)
144	WGEP (1 Story)

(17) Garage

Year Built:
Car Capacity:
Class: D
Exterior: Pole
Brick Ven.: 0
Stone Ven.: 0
Common Wall: Detache
Foundation: 18 Inch
Finished ?:
Auto. Doors: 0
Mech. Doors: 0
Area: 1040
% Good: 0
Storage Area: 0
No Conc. Floor: 0

Bsmnt Garage:

Carport Area:
Roof:

Cost Est. for Res. Bldg: 1 Mobile Home SWT/DWT Cls Fair Blt 0
(11) Heating System: Wall Furnace
Ground Area = 924 SF Floor Area = 924 SF.
Phy/Ab.Phy/Func/Econ/Comb. % Good=35/100/100/100/35
Building Areas

Type	Ext. Walls	Roof/Fnd.	Size	Cost New	Depr. Cost
Main Home	Ribbed	Metal	924		
			Total:	47,507	16,628
Other Additions/Adjustments					
Skirting, Metal or Vinyl, Vertical			160	1,784	624
Water/Sewer					
1000 Gal Septic			1	4,582	1,604
Water Well, 100 Feet			1	5,680	1,988
Porches					
WCP (1 Story)			96	3,842	1,345
WGEP (1 Story)			144	8,915	3,120
Garages					
Class: D Exterior: Pole (Unfinished)					
Base Cost			1040	19,999	7,000
Class: D Exterior: Siding Foundation: 42 Inch (Unfinished)					
Base Cost			1152	33,108	11,588
No Concrete Floor			720	-4,039	-1,414
Local Cost Items					
FREE STANDING ROOF			924	6,690	2,341
			Totals:	128,068	44,824

Notes:
ECF (RESIDENTIAL) 1.297 => TCV: 58,137

*** Information herein deemed reliable but not guaranteed***

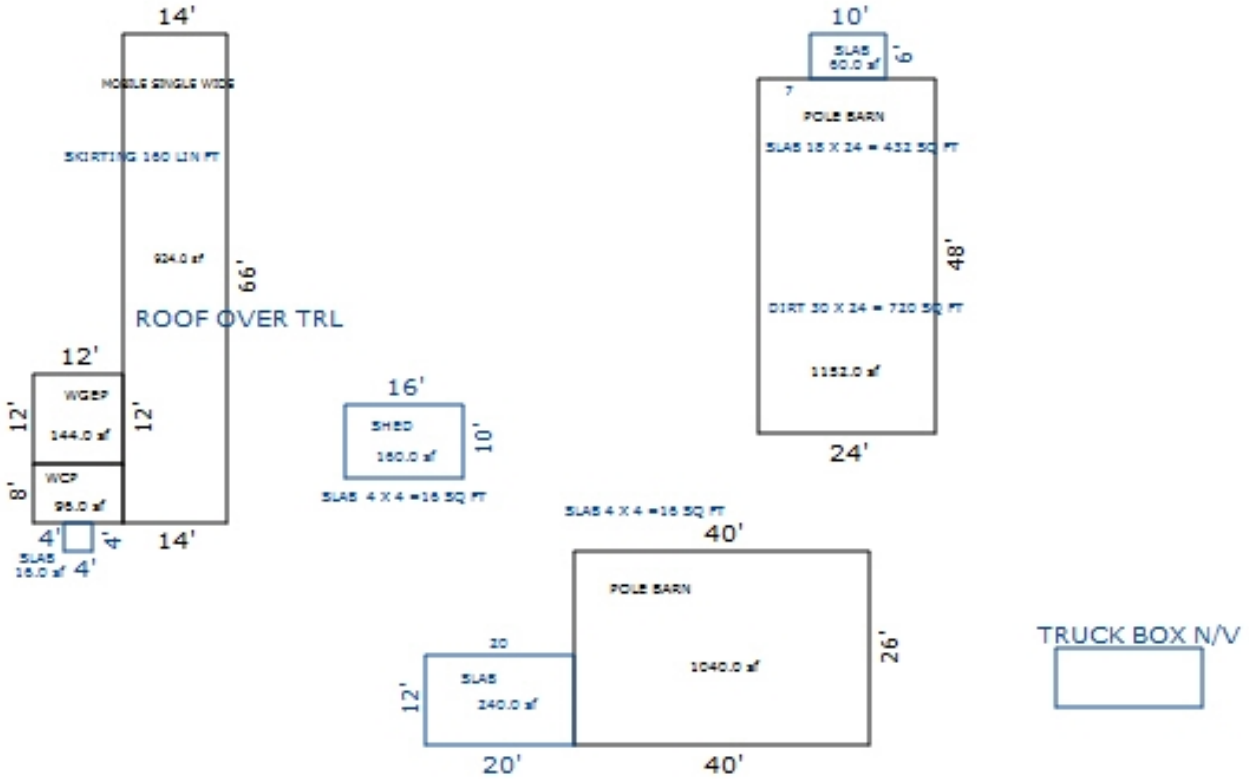

Sketch by Apex Sketch

*** Information herein deemed reliable but not guaranteed***

Parcel Number: 2410-28-4101-02 Jurisdiction: GREENWOOD TWP County: WEXFORD Printed on 02/15/2024

Grantor	Grantee	Sale Price	Sale Date	Inst. Type	Terms of Sale	Liber & Page	Verified By	Prcnt. Trans.

Property Address	Class: RESIDENTIAL-VACANT	Zoning:	Building Permit(s)	Date	Number	Status
7463 N 31 RD	School: MANTON CONSOLIDATED SCHOOLS		Manufactured home	08/23/2022	PB22-0243	COMPLETE
	P.R.E. 100% / /					
Owner's Name/Address	:					
	2024 Est TCV 49,684 TCV/TFA: 68.25					

FOOR, JAMES L.
& CAROLYN SUE
7463 N 31 RD
MANTON MI 49663-9526

X Improved | Vacant

Public Improvements

- Dirt Road
- Gravel Road
- Paved Road
- Storm Sewer
- Sidewalk
- Water
- Sewer
- Electric
- Gas
- Curb
- Street Lights
- Standard Utilities
- Underground Utils.

Topography of Site

- Level
- Rolling
- Low
- High
- Landscaped
- Swamp
- Wooded
- Pond
- Waterfront
- Ravine
- Wetland
- Flood Plain

Who When What

GLA 10/31/2022 INSPECTION

Tax Description

N 361.5 FT OF W 361.5 FT OF N 1/2 OF NE 1/4 OF SE 1/4 TOG W/ & SUB TO A 20 FT EASMENT 3 A. GW. SEC. 28 T24N R10W
-MANTON-
SPLIT/COMBINED ON 01/06/2022 FROM 2410-28-4101;

Comments/Influences

Split/Comb. on 01/06/2022 completed 01/06/2022 LINDA ;
Parent Parcel(s): 2410-28-4101;
Child Parcel(s): 2410-28-4101-01, 2410-28-4101-02;

Land Value Estimates for Land Table 4010.LAND VALUES

Description	Frontage	Depth	* Factors * Front	Depth	Rate	%Adj.	Reason	Value
ACREAGE			3.000 Acres		5,546	100		16,638
			3.00 Total Acres		Total Est. Land Value =			16,638

Land Improvement Cost Estimates

Description	Rate	Size	% Good	Cash Value
Wood Frame	28.00	64	49	878
Total Estimated Land Improvements True Cash Value =				878

Year	Land Value	Building Value	Assessed Value	Board of Review	Tribunal/ Other	Taxable Value
2024	8,300	16,500	24,800			17,503C
2023	7,100	13,300	20,400			16,670C
2022	6,500	0	6,500			2,258C
2021	0	0	0			0

The Equalizer. Copyright (c) 1999 - 2009. Licensed To: Township of Greenwood, County of Wexford, Michigan

*** Information herein deemed reliable but not guaranteed***

Building Type

	Single Family
X	Mobile Home
	Town Home
	Duplex
	A-Frame

X	Wood Frame

Building Style: SWT/DWT

Yr Built	Remodeled
0	0

Condition: Good

Room List

	Basement
	1st Floor
	2nd Floor
	Bedrooms

(1) Exterior

	Wood/Shingle
	Aluminum/Vinyl
X	Brick
X	Insulation

(2) Windows

	Many		Large
X	Avg.	X	Avg.
	Few		Small

	Wood Sash
	Metal Sash
X	Vinyl Sash
	Double Hung
	Horiz. Slide
	Casement
	Double Glass
	Patio Doors
X	Storms & Screens

(3) Roof

X	Gable		Gambrel
	Hip		Mansard
	Flat		Shed

X	Asphalt Shingle

Chimney:

(3) Roof (cont.)

	Eavestrough
X	Insulation
0	Front Overhang
0	Other Overhang

(4) Interior

X	Drywall		Plaster
	Paneled		Wood T&G

Trim & Decoration

	Ex	X	Ord		Min

Size of Closets

	Lg	X	Ord		Small

Doors:		Solid	X	H.C.	

(5) Floors

Kitchen:
Other: Linoleum
Other: Carpeted

(6) Ceilings

X	Drywall		

(7) Excavation

Basement: 0 S.F.
Crawl: 0 S.F.
Slab: 0 S.F.
Height to Joists: 0.0

(8) Basement

	Conc. Block
	Poured Conc.
	Stone
	Treated Wood
	Concrete Floor

(9) Basement Finish

	Recreation SF
	Living SF
	Walkout Doors (B)
	No Floor SF
	Walkout Doors (A)

(10) Floor Support

Joists:
Unsupported Len:
Cntr.Sup:

(11) Heating/Cooling

X	Gas		Oil		Elec.
	Wood		Coal		Steam

X	Forced Warm Air
	Wall Furnace
	Warm & Cool Air
	Heat Pump

	Central Air
	Wood Furnace

(12) Electric

150	Amps Service

No./Qual. of Fixtures

	Ex.	X	Ord.		Min

No. of Elec. Outlets

	Many	X	Ave.		Few

(13) Plumbing

1	Average Fixture(s)
	3 Fixture Bath
	2 Fixture Bath
	Softener, Auto
	Softener, Manual
	Solar Water Heat
	No Plumbing
	Extra Toilet
	Extra Sink
	Separate Shower
	Ceramic Tile Floor
	Ceramic Tile Wains
	Ceramic Tub Alcove
	Vent Fan

(14) Water/Sewer

	Public Water
	Public Sewer
1	Water Well
1	1000 Gal Septic
	2000 Gal Septic

Lump Sum Items:

(15) Built-ins

	Appliance Allow.
	Cook Top
	Dishwasher
	Garbage Disposal
	Bath Heater
	Vent Fan
	Hot Tub
	Unvented Hood
	Vented Hood
	Intercom
	Jacuzzi Tub
	Jacuzzi repl.Tub
	Oven
	Microwave
	Standard Range
	Self Clean Range
	Sauna
	Trash Compactor
	Central Vacuum
	Security System

(15) Fireplaces

	Interior 1 Story
	Interior 2 Story
	2nd/Same Stack
	Two Sided
	Exterior 1 Story
	Exterior 2 Story
	Prefab 1 Story
	Prefab 2 Story
	Heat Circulator
	Raised Hearth
	Wood Stove
	Direct-Vented Gas

Class: Average
Effec. Age: 27
Floor Area:
Total Base New : 62,004 E.C.F.
Total Depr Cost: 24,802 X 1.297
Estimated T.C.V: 32,168

(16) Porches/Decks

Area	Type

(17) Garage

Year Built:
Car Capacity:
Class:
Exterior:
Brick Ven.:
Stone Ven.:
Common Wall:
Foundation:
Finished ?:
Auto. Doors:
Mech. Doors:
Area:
% Good:
Storage Area:
No Conc. Floor:

Bsmnt Garage:

Carport Area:
Roof:

Cost Est. for Res. Bldg: 1 Mobile Home SWT/DWT Cls Average Blt 0
(11) Heating System: Forced Warm Air
Ground Area = 728 SF Floor Area = 728 SF.
Phy/Ab.Phy/Func/Econ/Comb. % Good=40/100/100/100/40
Building Areas

Type	Ext. Walls	Roof/Fnd.	Size	Cost New	Depr. Cost
Main Home	Ribbed	Metal	728		
			Total:	46,940	18,776
Other Additions/Adjustments					
Skirting, Metal or Vinyl, Vertical			132	1,510	604
Water/Sewer					
1000 Gal Septic			1	4,899	1,960
Water Well, 150 Feet			1	8,655	3,462
			Totals:	62,004	24,802

Notes:

ECF (RESIDENTIAL) 1.297 => TCV: 32,168

*** Information herein deemed reliable but not guaranteed***

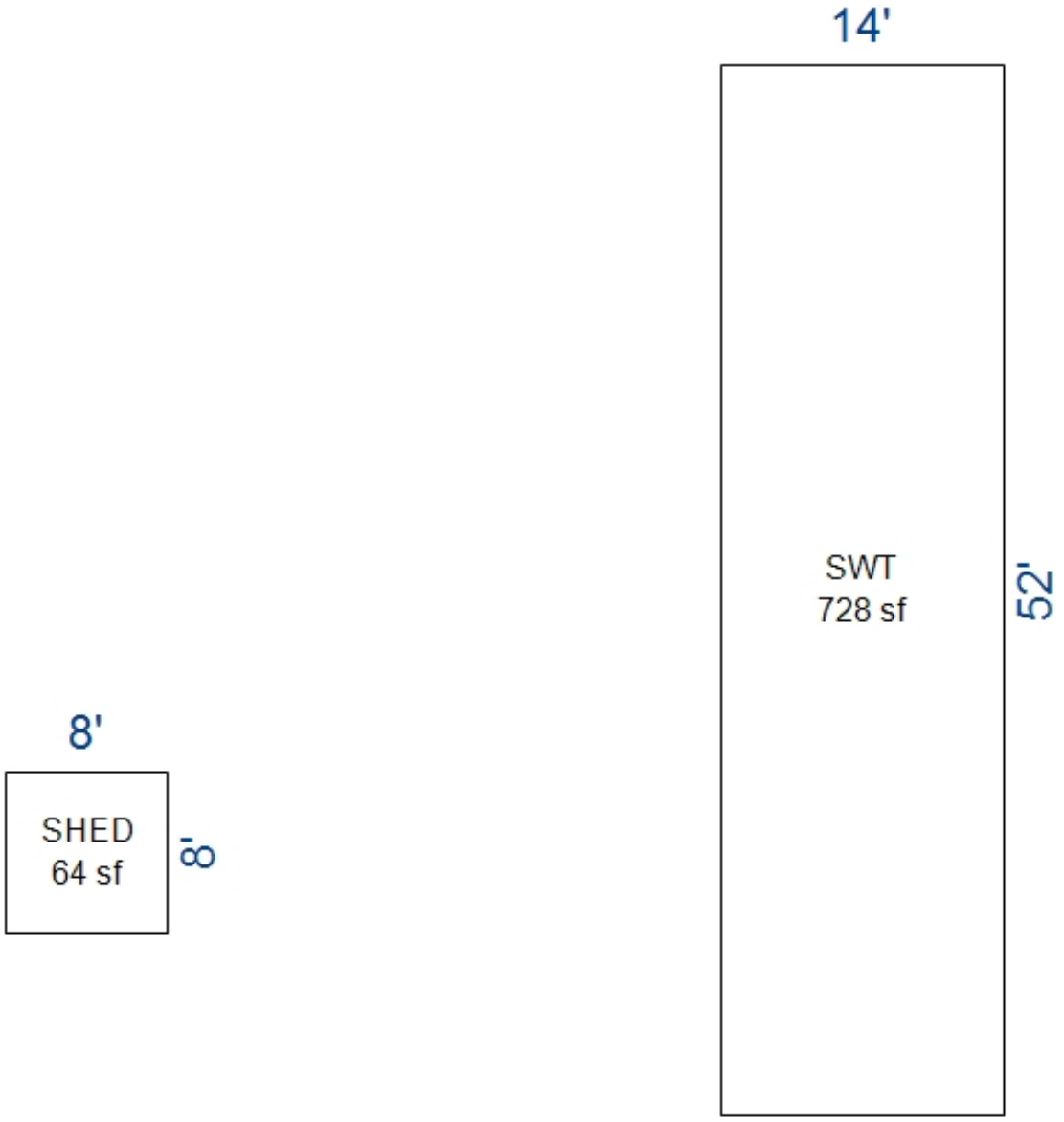

*** Information herein deemed reliable but not guaranteed***

Parcel Number: 2410-28-4102 Jurisdiction: GREENWOOD TWP County: WEXFORD Printed on 02/15/2024

Grantor	Grantee	Sale Price	Sale Date	Inst. Type	Terms of Sale	Liber & Page	Verified By	Prcnt. Trans.
LUTKE, JASON & LONNY LUTKE	SHELDON, COURTNEY, VICKY K	185,000	06/23/2022	WD	03-ARM'S LENGTH	693/935	DEED	100.0
NPB MORTGAGE LLC	LUTKE, JASON & LONNY LUTKE	28,000	11/05/2010	WD	11-FROM LENDING INSTITUTI	634/2207	DEED	100.0
GONZALEZ, ED & KRISTI	NPB MORTGAGE LLC	44,112	08/07/2009	SD	10-FORECLOSURE	623/1477	DEED	0.0
RICHARDS, DALE A & JENNIFE	GONZALEZ, ED & KRISTI	94,340	02/23/2006	WD	03-ARM'S LENGTH	584:489	DEED	0.0

Property Address

7301 N 31 RD

Owner's Name/Address

SHELDON, COURTNEY, VICKY KIMBALL &
KEVIN EMMONS
4913 STUMP RD
MARYVILLE TN 37803

Tax Description

E 1/2 OF S 1/2 OF NE 1/4 OF SE 1/4 10 A.
GW. SEC. 28 T24N R10W -MANTON-

Comments/Influences

The Equalizer. Copyright (c) 1999 - 2009.
Licensed To: Township of Greenwood, County of Wexford, Michigan

Class: RESIDENTIAL-IMPROV Zoning:

School: MANTON CONSOLIDATED SCHOOLS

P.R.E. 0%

:

2024 Est TCV 114,017 TCV/TFA: 87.98

Building Permit(s)	Date	Number	Status
RESIDENTIAL - REMODEL	10/25/2004	PM8050	
RESIDENTIAL - NEW	01/03/2000	PP1636	
RESIDENTIAL - NEW	11/08/1999	PE12549	
RESIDENTIAL - REMODEL	11/03/1999	PB9408	

X	Improved		Vacant

	Public Improvements
	Dirt Road
	Gravel Road
X	Paved Road
	Storm Sewer
	Sidewalk
	Water
	Sewer
X	Electric
	Gas
	Curb
	Street Lights
	Standard Utilities
	Underground Utils.

	Topography of Site
X	Level
	Rolling
X	Low
	High
	Landscaped
X	Swamp
X	Wooded
	Pond
	Waterfront
	Ravine
	Wetland
	Flood Plain
X	OPEN

Who	When	What
GLA	07/10/2019	INSPECTION
GLA	07/10/2019	INSPECTION

Land Value Estimates for Land Table 4010.LAND VALUES

Description	Frontage	Depth	* Factors * Front	Depth	Rate	%Adj.	Reason	Value
ACREAGE			9.500 Acres		4,694	100		44,589
ROW			0.500 Acres		0	100		0
			10.00 Total Acres		Total Est. Land Value =			44,589

Land Improvement Cost Estimates

Description	Rate	Size	% Good	Cash Value
D/W/P: 3.5 Concrete	6.63	216	43	616
Metal Prefab	18.11	117	43	911
Total Estimated Land Improvements True Cash Value =				1,527

Year	Land Value	Building Value	Assessed Value	Board of Review	Tribunal/ Other	Taxable Value
2024	22,300	34,700	57,000			42,945C
2023	12,800	28,100	40,900			40,900S
2022	11,800	23,400	35,200			24,974C
2021	12,000	20,100	32,100			24,177C

*** Information herein deemed reliable but not guaranteed***

Building Type

	Single Family
X	Mobile Home
	Town Home
	Duplex
	A-Frame

X	Wood Frame

Building Style: SWT/DWT

Yr Built	Remodeled
0	0

Condition: Good

Room List

	Basement
	1st Floor
	2nd Floor
	Bedrooms

(1) Exterior

	Wood/Shingle
	Aluminum/Vinyl
X	Brick
X	Insulation

(2) Windows

	Many		Large
X	Avg.	X	Avg.
	Few		Small

	Wood Sash
	Metal Sash
X	Vinyl Sash
	Double Hung
	Horiz. Slide
	Casement
	Double Glass
	Patio Doors
X	Storms & Screens

(3) Roof

X	Gable		Gambrel
	Hip		Mansard
	Flat		Shed

X	Asphalt Shingle

Chimney:

(3) Roof (cont.)

	Eavestrough
X	Insulation
0	Front Overhang
0	Other Overhang

(4) Interior

X	Drywall		Plaster
	Paneled		Wood T&G

Trim & Decoration

	Ex	X	Ord		Min

Size of Closets

	Lg	X	Ord		Small

Doors:		Solid	X	H.C.	

(5) Floors

Kitchen:
Other: Linoleum
Other: Carpeted

(6) Ceilings

X	Drywall		

(7) Excavation

Basement: 0 S.F.
Crawl: 0 S.F.
Slab: 0 S.F.
Height to Joists: 0.0

(8) Basement

	Conc. Block
	Poured Conc.
	Stone
	Treated Wood
	Concrete Floor

(9) Basement Finish

	Recreation SF
	Living SF
	Walkout Doors (B)
	No Floor SF
	Walkout Doors (A)

(10) Floor Support

Joists:
Unsupported Len:
Cntr.Sup:

(11) Heating/Cooling

X	Gas		Oil		Elec.
	Wood		Coal		Steam

X	Forced Warm Air
	Wall Furnace
	Warm & Cool Air
	Heat Pump
	Central Air
	Wood Furnace

(12) Electric

150	Amps Service

No./Qual. of Fixtures

	Ex.	X	Ord.		Min

No. of Elec. Outlets

	Many	X	Ave.		Few

(13) Plumbing

	Average Fixture(s)
1	3 Fixture Bath
	2 Fixture Bath
	Softener, Auto
	Softener, Manual
	Solar Water Heat
	No Plumbing
	Extra Toilet
	Extra Sink
	Separate Shower
	Ceramic Tile Floor
	Ceramic Tile Wains
	Ceramic Tub Alcove
	Vent Fan

(14) Water/Sewer

	Public Water
	Public Sewer
1	Water Well
1	1000 Gal Septic
	2000 Gal Septic

Lump Sum Items:

(15) Built-ins

	Appliance Allow.
	Cook Top
	Dishwasher
	Garbage Disposal
	Bath Heater
	Vent Fan
	Hot Tub
	Unvented Hood
	Vented Hood
	Intercom
	Jacuzzi Tub
	Jacuzzi repl.Tub
	Oven
	Microwave
	Standard Range
	Self Clean Range
	Sauna
	Trash Compactor
	Central Vacuum
	Security System

(15) Fireplaces

	Interior 1 Story
	Interior 2 Story
	2nd/Same Stack
	Two Sided
	Exterior 1 Story
	Exterior 2 Story
	Prefab 1 Story
	Prefab 2 Story
	Heat Circulator
	Raised Hearth
	Wood Stove
	Direct-Vented Gas

Class: Average
Effec. Age: 24
Floor Area:
Total Base New : 111,387 E.C.F.
Total Depr Cost: 52,352 X 1.297
Estimated T.C.V: 67,901

(16) Porches/Decks

Area	Type
16	WPP
420	WPP
9	CPP

(17) Garage

Year Built:
Car Capacity:
Class:
Exterior:
Brick Ven.:
Stone Ven.:
Common Wall:
Foundation:
Finished ?:
Auto. Doors:
Mech. Doors:
Area:
% Good:
Storage Area:
No Conc. Floor:

Bsmnt Garage:

Carport Area:
Roof:

Cost Est. for Res. Bldg: 1 Mobile Home SWT/DWT Cls Average Blt 0
(11) Heating System: Forced Warm Air
Ground Area = 1296 SF Floor Area = 1296 SF.
Phy/Ab.Phy/Func/Econ/Comb. % Good=47/100/100/100/47
Building Areas

Type	Ext. Walls	Roof/Fnd.	Size	Cost New	Depr. Cost
Main Home	Siding	Comp.Shingle	1296		
			Total:	88,265	41,484
Other Additions/Adjustments					
Skirting, Metal or Vinyl, Vertical			150	1,716	807
Water/Sewer					
1000 Gal Septic			1	4,899	2,303
Water Well, 100 Feet			1	5,849	2,749
Porches					
WPP			420	9,551	4,489
WPP			16	854	401
CPP			9	253	119
			Totals:	111,387	52,352

Notes:
ECF (RESIDENTIAL) 1.297 => TCV: 67,901

*** Information herein deemed reliable but not guaranteed***

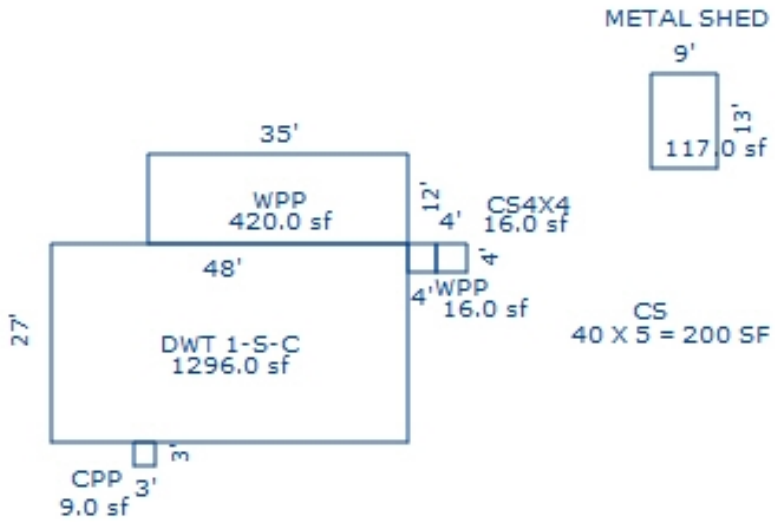

Sketch by Apex Sketch

*** Information herein deemed reliable but not guaranteed***

Parcel Number: 2410-28-4103 Jurisdiction: GREENWOOD TWP County: WEXFORD Printed on 02/15/2024

Grantor	Grantee	Sale Price	Sale Date	Inst. Type	Terms of Sale	Liber & Page	Verified By	Prcnt. Trans.
GARY, MURMEN L JR	GARY, MURMEN L JR LE & TRU	0	06/04/2013	WD	18-LIFE ESTATE	659/2679	DEED	0.0
GREEN TREE SERVICING	GARY, MURMEN & NANCY	38,000	07/13/2006	WD	21-NOT USED/OTHER	590:356	DEED	0.0
RICHARDS, NICOLE & ALLEN	GREEN TREE SERVICING	49,628	02/25/2005	SD	32-SPLIT VACANT	568:2670	DEED	0.0

Property Address

7333 N 31 RD

Owner's Name/Address

GARY, MURMEN L JR LE &
MURMEN L GARY JR TRUST
7333 N 31 RD
MANTON MI 49663

Tax Description

W 1/2 OF S 1/2 OF NE 1/4 OF SE 1/4 10 A. M/L GW. SEC. 28 T24N R10W - MANTON -

Comments/Influences

Class: RESIDENTIAL-IMPROV Zoning:

School: MANTON CONSOLIDATED SCHOOLS

P.R.E. 100% / /

:

2024 Est TCV 116,037 TCV/TFA: 121.89

Building Permit(s)	Date	Number	Status
RESIDENTIAL - REMODEL	02/06/2002	PM5713	

X Improved | Vacant

	Public Improvements
X	Dirt Road
	Gravel Road
X	Paved Road
	Storm Sewer
	Sidewalk
	Water
	Sewer
X	Electric
	Gas
	Curb
	Street Lights
	Standard Utilities
	Underground Utils.

	Topography of Site
X	Level
X	Rolling
X	Low
	High
	Landscaped
X	Swamp
X	Wooded
	Pond
	Waterfront
	Ravine
	Wetland
	Flood Plain
X	OPEN

Who	When	What
GLA	07/10/2019	INSPECTION
GLA	07/10/2019	INSPECTION
LM	10/31/2011	APPR INSPE

Land Value Estimates for Land Table 4010.LAND VALUES

Description	Frontage	Depth	* Factors * Front	Depth	Rate	%Adj.	Reason	Value
ACREAGE			10.000 Acres		4,635	100		46,350
			10.00 Total Acres		Total Est. Land Value =			46,350

Land Improvement Cost Estimates

Description	Rate	Size	% Good	Cash Value
D/W/P: 3.5 Concrete	5.82	92	43	230
Wood Frame	19.29	248	43	2,057
Total Estimated Land Improvements True Cash Value =				2,287

Year	Land Value	Building Value	Assessed Value	Board of Review	Tribunal/ Other	Taxable Value
2024	23,200	34,800	58,000			32,122C
2023	13,000	28,200	41,200			30,593C
2022	12,000	23,600	35,600			29,137C
2021	12,000	20,300	32,300			28,207C

The Equalizer. Copyright (c) 1999 - 2009.
Licensed To: Township of Greenwood, County of Wexford, Michigan

*** Information herein deemed reliable but not guaranteed***

Building Type

	Single Family
X	Mobile Home
	Town Home
	Duplex
	A-Frame

X	Wood Frame

Building Style: SWT/DWT

Yr Built	Remodeled
1991	0

Condition: Fair

Room List

	Basement
	1st Floor
	2nd Floor
	Bedrooms

(1) Exterior

X	Wood/Shingle
	Aluminum/Vinyl
	Brick
	Insulation

(2) Windows

	Many		Large
X	Avg.	X	Avg.
	Few		Small

Wood Sash
Metal Sash
Vinyl Sash
Double Hung
Horiz. Slide
Casement
Double Glass
Patio Doors
Storms & Screens

(3) Roof

X	Gable		Gambrel
	Hip		Mansard
	Flat		Shed

X	Asphalt Shingle

Chimney: Brick

(3) Roof (cont.)

	Eavestrough
	Insulation
0	Front Overhang
0	Other Overhang

(4) Interior

	Drywall		Plaster
	Paneled		Wood T&G

Trim & Decoration

	Ex	X	Ord		Min

Size of Closets

	Lg	X	Ord		Small

Doors:		Solid	X	H.C.	

(5) Floors

Kitchen:
Other:
Other:

(6) Ceilings

(7) Excavation

Basement: 0 S.F.
Crawl: 0 S.F.
Slab: 0 S.F.
Height to Joists: 0.0

(8) Basement

	Conc. Block
	Poured Conc.
	Stone
	Treated Wood
	Concrete Floor

(9) Basement Finish

	Recreation	SF
	Living	SF
	Walkout Doors (B)	
	No Floor	SF
	Walkout Doors (A)	

(10) Floor Support

Joists:
Unsupported Len:
Cntr.Sup:

(11) Heating/Cooling

X	Gas		Oil		Elec.
	Wood		Coal		Steam

	Forced Warm Air
	Wall Furnace
X	Warm & Cool Air
	Heat Pump

	Central Air
	Wood Furnace

(12) Electric

0	Amps Service

No./Qual. of Fixtures

	Ex.	X	Ord.		Min

No. of Elec. Outlets

	Many	X	Ave.		Few

(13) Plumbing

	Average Fixture(s)
1	3 Fixture Bath
	2 Fixture Bath
	Softener, Auto
	Softener, Manual
	Solar Water Heat
	No Plumbing
	Extra Toilet
	Extra Sink
	Separate Shower
	Ceramic Tile Floor
	Ceramic Tile Wains
	Ceramic Tub Alcove
	Vent Fan

(14) Water/Sewer

	Public Water
	Public Sewer
1	Water Well
1	1000 Gal Septic
	2000 Gal Septic

Lump Sum Items:

(15) Built-ins

	Appliance Allow.
	Cook Top
	Dishwasher
	Garbage Disposal
	Bath Heater
	Vent Fan
	Hot Tub
	Unvented Hood
	Vented Hood
	Intercom
	Jacuzzi Tub
	Jacuzzi repl.Tub
	Oven
	Microwave
	Standard Range
	Self Clean Range
	Sauna
	Trash Compactor
	Central Vacuum
	Security System

(15) Fireplaces

	Interior 1 Story
	Interior 2 Story
	2nd/Same Stack
	Two Sided
	Exterior 1 Story
	Exterior 2 Story
1	Prefab 1 Story
	Prefab 2 Story
	Heat Circulator
	Raised Hearth
	Wood Stove
	Direct-Vented Gas

Class: Fair
Effec. Age: 20
Floor Area:
Total Base New : 112,970 E.C.F.
Total Depr Cost: 51,966 X 1.297
Estimated T.C.V: 67,400

(16) Porches/Decks

Area	Type
180	WGEP (1 Story)
128	CCP (1 Story)

(17) Garage

Year Built:
Car Capacity:
Class: CD
Exterior: Pole
Brick Ven.: 0
Stone Ven.: 0
Common Wall: Detache
Foundation: 18 Inch
Finished ?:
Auto. Doors: 0
Mech. Doors: 0
Area: 1400
% Good: 0
Storage Area: 0
No Conc. Floor: 0

Bsmnt Garage:

Carport Area:
Roof:

Cost Est. for Res. Bldg: 1 Mobile Home SWT/DWT Cls Fair Blt 1991
(11) Heating System: Warm & Cool Air
Ground Area = 952 SF Floor Area = 952 SF.
Phy/Ab.Phy/Func/Econ/Comb. % Good=46/100/100/100/46
Building Areas

Type	Ext. Walls	Roof/Fnd.	Size	Cost New	Depr. Cost
Main Home	Siding	Comp.Shingle	952		
			Total:	55,491	25,525
Other Additions/Adjustments					
Skirting, Metal or Vinyl, Vertical			164	1,829	841
Water/Sewer					
1000 Gal Septic			1	4,582	2,108
Water Well, 100 Feet			1	5,680	2,613
Porches					
WGEP (1 Story)			180	10,015	4,607
CCP (1 Story)			128	2,719	1,251
Fireplaces					
Prefab 1 Story			1	2,204	1,014
Garages					
Class: CD Exterior: Pole (Unfinished)					
Base Cost			1400	30,450	14,007
			Totals:	112,970	51,966

Notes: PS 515410

ECF (RESIDENTIAL) 1.297 => TCV: 67,400

*** Information herein deemed reliable but not guaranteed***

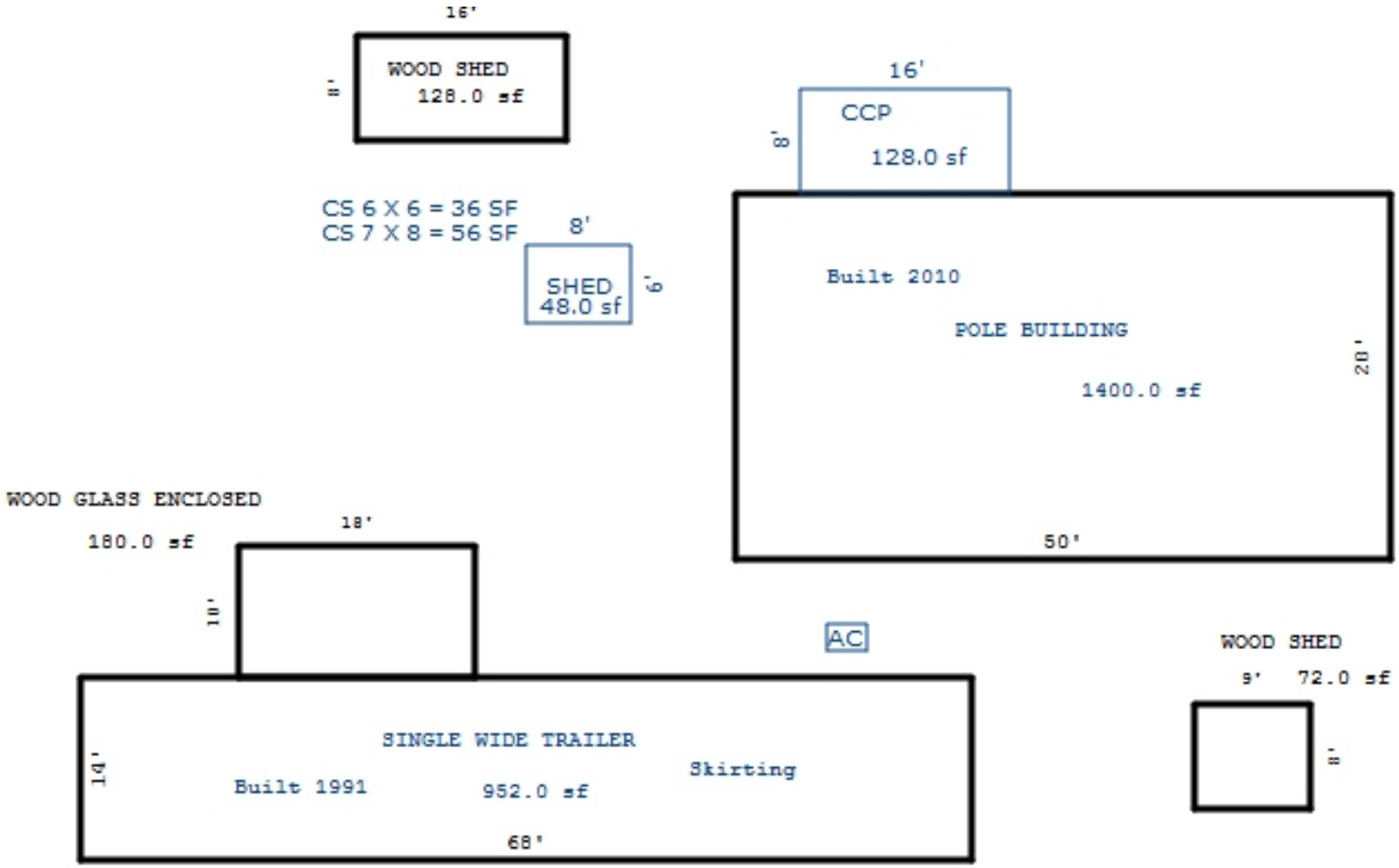

Sketch by Apex Sketch

*** Information herein deemed reliable but not guaranteed***

Parcel Number: 2410-28-4401 Jurisdiction: GREENWOOD TWP County: WEXFORD Printed on 02/15/2024

Grantor	Grantee	Sale Price	Sale Date	Inst. Type	Terms of Sale	Liber & Page	Verified By	Prcnt. Trans.
GERKEN TRUSTEE, JOHN T.	MCINTYRE, DAVID L.	25,000	08/11/1994	WD	03-ARM'S LENGTH	340:814	DEED	0.0

Property Address

7017 N 31 RD

Owner's Name/Address

MCINTYRE, DAVID L.
ETAL
2422 HORTON AVE SE
GRAND RAPIDS MI 49507

Tax Description

S 1/2 OF E 1/2 OF SE 1/4 40 A. GW. SEC. 28 T24N R10W -MANTON-

Comments/Influences

The Equalizer. Copyright (c) 1999 - 2009. Licensed To: Township of Greenwood, County of Wexford, Michigan

Class: RESIDENTIAL-IMPROV Zoning:

School: MANTON CONSOLIDATED SCHOOLS

P.R.E. 0%

:

2024 Est TCV 141,405 TCV/TFA: 0.00

Building Permit(s)	Date	Number	Status

X Improved | Vacant

	Public Improvements
	Dirt Road
	Gravel Road
X	Paved Road
	Storm Sewer
	Sidewalk
	Water
	Sewer
X	Electric
	Gas
	Curb
	Street Lights
	Standard Utilities
	Underground Utils.

	Topography of Site
X	Level
	Rolling
X	Low
	High
	Landscaped
	Swamp
X	Wooded
	Pond
	Waterfront
	Ravine
	Wetland
	Flood Plain
X	OPEN/PINES

Who	When	What
GLA	07/10/2019	INSPECTION
GLA	07/10/2019	INSPECTION
GLA	08/04/2014	INSPECTION

Land Value Estimates for Land Table 4010.LAND VALUES

Description	Frontage	Depth	* Factors * Front	Depth	Rate	%Adj.	Reason	Value
ACREAGE			39.000 Acres		2,722	100		106,158
ROW			1.000 Acres		0	100		0
			40.00 Total Acres		Total Est. Land Value =			106,158

Land Improvement Cost Estimates

Description	Rate	Size	% Good	Cash Value
D/W/P: Asphalt Paving	3.12	2982	56	5,210
Total Estimated Land Improvements True Cash Value =				5,210

Year	Land Value	Building Value	Assessed Value	Board of Review	Tribunal/ Other	Taxable Value
2024	53,100	17,600	70,700			35,886C
2023	47,000	14,700	61,700			34,178C
2022	37,400	12,700	50,100			32,551C
2021	33,300	12,800	46,100			31,512C

*** Information herein deemed reliable but not guaranteed***

Building Type

X	Single Family
	Mobile Home
	Town Home
	Duplex
	A-Frame
X	Wood Frame

Building Style: PLAIN

Yr Built	Remodeled
0	0

Condition: Good

Room List

	Basement
	1st Floor
	2nd Floor
	Bedrooms

(1) Exterior

	Wood/Shingle
X	Aluminum/Vinyl
	Brick
X	Insulation

(2) Windows

	Many		Large
X	Avg.	X	Avg.
	Few		Small

	Wood Sash
	Metal Sash
X	Vinyl Sash
	Double Hung
	Horiz. Slide
	Casement
	Double Glass
	Patio Doors
X	Storms & Screens

(3) Roof

X	Gable		Gambrel
	Hip		Mansard
	Flat		Shed

X	Asphalt Shingle

Chimney:

(3) Roof (cont.)

	Eavestrough
X	Insulation
0	Front Overhang
0	Other Overhang

(4) Interior

X	Drywall		Plaster
	Paneled		Wood T&G

Trim & Decoration

	Ex	X	Ord		Min

Size of Closets

	Lg	X	Ord		Small

Doors:		Solid	X	H.C.	

(5) Floors

Kitchen:
Other: Linoleum
Other: Carpeted

(6) Ceilings

X	Drywall

(7) Excavation

Basement: 0 S.F.
Crawl: 0 S.F.
Slab: 0 S.F.
Height to Joists: 0.0

(8) Basement

	Conc. Block
	Poured Conc.
	Stone
	Treated Wood
	Concrete Floor

(9) Basement Finish

	Recreation SF
	Living SF
	Walkout Doors (B)
	No Floor SF
	Walkout Doors (A)

(10) Floor Support

Joists:
Unsupported Len:
Cntr.Sup:

(11) Heating/Cooling

X	Gas		Oil		Elec.
	Wood		Coal		Steam

	Forced Air w/o Ducts
	Forced Air w/ Ducts
	Forced Hot Water
	Electric Baseboard
	Elec. Ceil. Radiant
	Radiant (in-floor)
	Electric Wall Heat
	Space Heater
	Wall/Floor Furnace
	Forced Heat & Cool
	Heat Pump
X	No Heating/Cooling
	Central Air
	Wood Furnace

(12) Electric

150	Amps Service

No./Qual. of Fixtures

	Ex.	X	Ord.		Min

No. of Elec. Outlets

	Many	X	Ave.		Few

(13) Plumbing

	Average Fixture(s)
1	3 Fixture Bath
	2 Fixture Bath
	Softener, Auto
	Softener, Manual
	Solar Water Heat
	No Plumbing
	Extra Toilet
	Extra Sink
	Separate Shower
	Ceramic Tile Floor
	Ceramic Tile Wains
	Ceramic Tub Alcove
	Vent Fan

(14) Water/Sewer

	Public Water
	Public Sewer
1	Water Well
1	1000 Gal Septic
	2000 Gal Septic

Lump Sum Items:
1

(15) Built-ins

	Appliance Allow.
	Cook Top
	Dishwasher
	Garbage Disposal
	Bath Heater
	Vent Fan
	Hot Tub
	Unvented Hood
	Vented Hood
	Intercom
	Jacuzzi Tub
	Jacuzzi repl.Tub
	Oven
	Microwave
	Standard Range
	Self Clean Range
	Sauna
	Trash Compactor
	Central Vacuum
	Security System

(15) Fireplaces

	Interior 1 Story
	Interior 2 Story
	2nd/Same Stack
	Two Sided
	Exterior 1 Story
	Exterior 2 Story
	Prefab 1 Story
	Prefab 2 Story
	Heat Circulator
	Raised Hearth
	Wood Stove
	Direct-Vented Gas

Class: CD
Effec. Age: 39
Floor Area: 0
Total Base New : 37,966 E.C.F.
Total Depr Cost: 23,159 X 1.297
Estimated T.C.V: 30,037

(16) Porches/Decks

Area	Type
12	WPP

(17) Garage

Year Built:
Car Capacity:
Class: CD
Exterior: Pole
Brick Ven.: 0
Stone Ven.: 0
Common Wall: Detache
Foundation: 18 Inch
Finished ?:
Auto. Doors: 0
Mech. Doors: 0
Area: 1200
% Good: 0
Storage Area: 0
No Conc. Floor: 0

Bsmnt Garage:

Carport Area:
Roof:

Cost Est. for Res. Bldg: 1 Single Family PLAIN Cls CD Blt 0
(11) Heating System: No Heating/Cooling
Ground Area = 0 SF Floor Area = 0 SF.
Phy/Ab.Phy/Func/Econ/Comb. % Good=61/100/100/100/61
Building Areas

Stories / Exterior / Foundation	Size	Cost New	Depr. Cost
Other Additions/Adjustments			
Water/Sewer			
1000 Gal Septic	1	4,582	2,795
Water Well, 100 Feet	1	5,680	3,465
Porches			
WPP	12	604	368
Garages			
Class: CD Exterior: Pole (Unfinished)			
Base Cost	1200	26,100	15,921
Lump Sum Items			
TRL TRAVEL		1,000	610
Totals:		37,966	23,159

Notes:
ECF (RESIDENTIAL) 1.297 => TCV: 30,037

*** Information herein deemed reliable but not guaranteed***

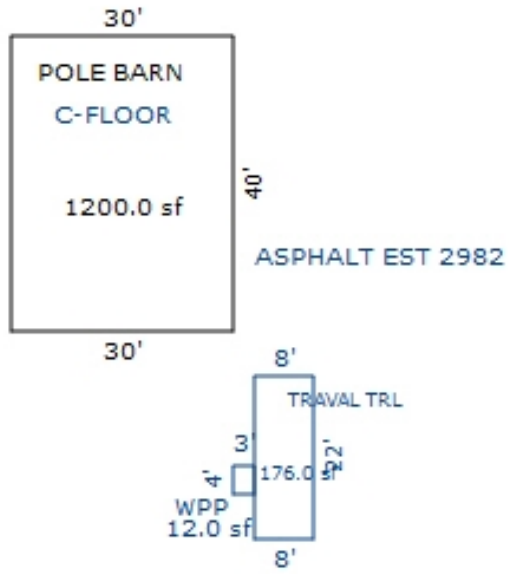

Sketch by Apex Sketch

*** Information herein deemed reliable but not guaranteed***

Parcel Number: 2410-29-1101 Jurisdiction: GREENWOOD TWP County: WEXFORD Printed on 02/15/2024

Grantor	Grantee	Sale Price	Sale Date	Inst. Type	Terms of Sale	Liber & Page	Verified By	Prcnt. Trans.
WOODIN, DONALD L & RUBY N	WOODIN, DONALD L & RUBY N	100	11/13/2020	QC	18-LIFE ESTATE	688/1878	AGENT	0.0

Property Address

Class: RESIDENTIAL-VACANT Zoning:

School: MANTON CONSOLIDATED SCHOOLS

P.R.E. 0%

:

2024 Est TCV 108,880

Building Permit(s)	Date	Number	Status

Owner's Name/Address

WOODIN, DONALD L & RUBY N LE
4427 BALDWIN RD
METAMORA MI 48455

	Improved	X	Vacant

Land Value Estimates for Land Table 4010.LAND VALUES

Description	Frontage	Depth	* Factors * Front	Depth	Rate	%Adj.	Reason	Value
ACREAGE			40.000 Acres		2,722	100		108,880
			40.00 Total Acres		Total Est. Land Value =			108,880

Public Improvements

X	Dirt Road
	Gravel Road
	Paved Road
	Storm Sewer
	Sidewalk
	Water
	Sewer
	Electric
	Gas
	Curb
	Street Lights
	Standard Utilities
	Underground Utils.

Topography of Site

	Level
X	Rolling
X	Low
	High
	Landscaped
	Swamp
X	Wooded
	Pond
	Waterfront
	Ravine
	Wetland
	Flood Plain

Tax Description

NE 1/4 OF NE 1/4 40 A. GW. SEC. 29 T24N R10W -MANTON-

Comments/Influences

Who	When	What
GLA	07/10/2019	INSPECTION
GLA	07/10/2019	INSPECTION

Year	Land Value	Building Value	Assessed Value	Board of Review	Tribunal/ Other	Taxable Value
2024	54,400	0	54,400			16,894C
2023	48,000	0	48,000			16,090C
2022	38,000	0	38,000			15,324C
2021	34,000	0	34,000			14,835C

The Equalizer. Copyright (c) 1999 - 2009. Licensed To: Township of Greenwood, County of Wexford, Michigan

*** Information herein deemed reliable but not guaranteed***

Parcel Number: 2410-29-1201 Jurisdiction: GREENWOOD TWP County: WEXFORD Printed on 02/15/2024

Grantor	Grantee	Sale Price	Sale Date	Inst. Type	Terms of Sale	Liber & Page	Verified By	Prcnt. Trans.

Property Address	Class: AGRICULTURAL-VACAN	Zoning:	Building Permit(s)	Date	Number	Status
	School: MANTON CONSOLIDATED SCHOOLS					
Owner's Name/Address	P.R.E. 0%					
	:					
STATE OF MICHIGAN P O BOX 30735 GRANTS ADMINISTRATION LANSING MI 48909-8235	2024 Est TCV 0					

Improved | X | Vacant

Land Value Estimates for Land Table 4010.LAND VALUES

Description	Frontage	Depth	* Factors * Front	Depth	Rate	%Adj.	Reason	Value
ACREAGE			400.000 Acres		2,480	100		992,000
			400.00 Total Acres		Total Est. Land Value =			992,000

Tax Description

NW 1/4 OF NE 1/4; SE 1/4 OF NE 1/4; E 1/2 OF SE 1/4; W 1/2 EXC NE 1/4 OF NW 1/4 & EXC NW 1/4 OF SW 1/4 400 A. GW. SEC. 29 T24N R10W -MANTON-

Comments/Influences

	Public Improvements
X	Dirt Road
	Gravel Road
	Paved Road
	Storm Sewer
	Sidewalk
	Water
	Sewer
X	Electric
	Gas
	Curb
	Street Lights
	Standard Utilities
	Underground Utils.

	Topography of Site
	Level
X	Rolling
	Low
	High
	Landscaped
	Swamp
X	Wooded
	Pond
	Waterfront
	Ravine
	Wetland
	Flood Plain
X	OPEN/PINES

Who	When	What
GLA	07/10/2019	INSPECTION
GLA	07/10/2019	INSPECTION

Year	Land Value	Building Value	Assessed Value	Board of Review	Tribunal/ Other	Taxable Value
2024	EXEMPT	EXEMPT	EXEMPT			EXEMPT
2023	EXEMPT	EXEMPT	EXEMPT			EXEMPT
2022	0	0	0			0
2021	0	0	0			0

The Equalizer. Copyright (c) 1999 - 2009. Licensed To: Township of Greenwood, County of Wexford, Michigan

*** Information herein deemed reliable but not guaranteed***

Parcel Number: 2410-29-1301 Jurisdiction: GREENWOOD TWP County: WEXFORD Printed on 02/15/2024

Grantor	Grantee	Sale Price	Sale Date	Inst. Type	Terms of Sale	Liber & Page	Verified By	Prcnt. Trans.
WOODIN, DONALD	WOODIN, DONALD L & RUBY N	100	11/13/2020	QC	21-NOT USED/OTHER	688/1877	AGENT	0.0
WOODIN, DONALD L & RUBY N	WOODIN, DONALD L & RUBY N	100	11/13/2020	QC	18-LIFE ESTATE	688/1878	AGENT	0.0

Property Address

Class: RESIDENTIAL-IMPROV Zoning:

School: MANTON CONSOLIDATED SCHOOLS

P.R.E. 0%

:

2024 Est TCV 117,691 TCV/TFA: 336.26

Building Permit(s)	Date	Number	Status

Owner's Name/Address

WOODIN, DONALD L & RUBY N LE
4427 BALDWIN RD
METAMORA MI 48455

X Improved | Vacant

Land Value Estimates for Land Table 4010.LAND VALUES

Description	Frontage	Depth	* Factors * Front	Depth	Rate	%Adj.	Reason	Value
	1350.00	0.00	1.0000	1.0000	0	100		0
ACREAGE			39.750 Acres		2,722	100		108,200
			0.250 Acres		0	100		0
1350 Actual Front Feet, 40.00 Total Acres							Total Est. Land Value =	108,200

Public Improvements

- X Dirt Road
- Gravel Road
- Paved Road
- Storm Sewer
- Sidewalk
- Water
- Sewer
- Electric
- Gas
- Curb
- Street Lights
- Standard Utilities
- Underground Utils.

Topography of Site

- X Level
- X Rolling
- X Low
- High
- Landscaped
- Swamp
- X Wooded
- Pond
- Waterfront
- Ravine
- Wetland
- Flood Plain

Tax Description

SW 1/4 OF NE 1/4 40 A. GW. SEC. 29 T24N R10W -MANTON-

Comments/Influences

Who When What

GLA 07/10/2019 INSPECTION
GLA 07/10/2019 INSPECTION

Year	Land Value	Building Value	Assessed Value	Board of Review	Tribunal/ Other	Taxable Value
2024	54,100	4,700	58,800			20,508C
2023	47,700	3,800	51,500			19,532C
2022	40,500	3,200	43,700			18,602C
2021	36,500	3,200	39,700			18,008C

The Equalizer. Copyright (c) 1999 - 2009.
Licensed To: Township of Greenwood, County of Wexford, Michigan

*** Information herein deemed reliable but not guaranteed***

Building Type

X	Single Family
	Mobile Home
	Town Home
	Duplex
	A-Frame
X	Wood Frame

Building Style: PLAIN

Yr Built	Remodeled
0	0

Condition: Good

Room List

	Basement
	1st Floor
	2nd Floor
	Bedrooms

(1) Exterior

X	Wood/Shingle
	Aluminum/Vinyl
	Brick
X	Insulation

(2) Windows

X	Many Avg. Few	X	Large Avg. Small

	Wood Sash
	Metal Sash
X	Vinyl Sash
	Double Hung
	Horiz. Slide
	Casement
	Double Glass
	Patio Doors
X	Storms & Screens

(3) Roof

X	Gable		Gambrel
	Hip		Mansard
	Flat		Shed

X	Asphalt Shingle

Chimney:

(3) Roof (cont.)

	Eavestrough
X	Insulation
0	Front Overhang
0	Other Overhang

(4) Interior

X	Drywall		Plaster
	Paneled		Wood T&G

Trim & Decoration

	Ex	X	Ord		Min

Size of Closets

	Lg	X	Ord		Small

Doors:		Solid	X	H.C.	

(5) Floors

Kitchen:
Other: Linoleum
Other: Carpeted

(6) Ceilings

X	Drywall

(7) Excavation

Basement: 0 S.F.
Crawl: 0 S.F.
Slab: 350 S.F.
Height to Joists: 0.0

(8) Basement

	Conc. Block
	Poured Conc.
	Stone
	Treated Wood
	Concrete Floor

(9) Basement Finish

	Recreation SF
	Living SF
	Walkout Doors (B)
	No Floor SF
	Walkout Doors (A)

(10) Floor Support

Joists:
Unsupported Len:
Cntr.Sup:

(11) Heating/Cooling

X	Gas		Oil		Elec.
	Wood		Coal		Steam

	Forced Air w/o Ducts
X	Forced Air w/ Ducts
	Forced Hot Water
	Electric Baseboard
	Elec. Ceil. Radiant
	Radiant (in-floor)
	Electric Wall Heat
	Space Heater
	Wall/Floor Furnace
	Forced Heat & Cool
	Heat Pump
	No Heating/Cooling

	Central Air
	Wood Furnace

(12) Electric

150	Amps Service

No./Qual. of Fixtures

	Ex.	X	Ord.		Min

No. of Elec. Outlets

	Many	X	Ave.		Few

(13) Plumbing

1	Average Fixture(s)
	3 Fixture Bath
	2 Fixture Bath
	Softener, Auto
	Softener, Manual
	Solar Water Heat
	No Plumbing
	Extra Toilet
	Extra Sink
	Separate Shower
	Ceramic Tile Floor
	Ceramic Tile Wains
	Ceramic Tub Alcove
	Vent Fan

(14) Water/Sewer

	Public Water
	Public Sewer
1	Water Well
1	1000 Gal Septic
	2000 Gal Septic

Lump Sum Items:

(15) Built-ins

	Appliance Allow.
	Cook Top
	Dishwasher
	Garbage Disposal
	Bath Heater
	Vent Fan
	Hot Tub
	Unvented Hood
	Vented Hood
	Intercom
	Jacuzzi Tub
	Jacuzzi repl.Tub
	Oven
	Microwave
	Standard Range
	Self Clean Range
	Sauna
	Trash Compactor
	Central Vacuum
	Security System

(15) Fireplaces

	Interior 1 Story
	Interior 2 Story
	2nd/Same Stack
	Two Sided
	Exterior 1 Story
	Exterior 2 Story
	Prefab 1 Story
	Prefab 2 Story
	Heat Circulator
	Raised Hearth
	Wood Stove
	Direct-Vented Gas

Class: D
Effec. Age: 65
Floor Area: 350
Total Base New : 54,208 E.C.F.
Total Depr Cost: 7,318 X 1.297
Estimated T.C.V: 9,491

(16) Porches/Decks

Area	Type

(17) Garage

Year Built:
Car Capacity:
Class:
Exterior:
Brick Ven.:
Stone Ven.:
Common Wall:
Foundation:
Finished ?:
Auto. Doors:
Mech. Doors:
Area:
% Good:
Storage Area:
No Conc. Floor:

Bsmnt Garage:

Carport Area:
Roof:

Cost Est. for Res. Bldg: 1 Single Family PLAIN Cls D Blt 0
(11) Heating System: Forced Air w/ Ducts
Ground Area = 350 SF Floor Area = 350 SF.
Phy/Ab.Phy/Func/Econ/Comb. % Good=45/100/30/100/13.5
Building Areas

Stories	Exterior	Foundation	Size	Cost New	Depr. Cost
1 Story	Block	Slab	350		
			Total:	44,424	5,997
Other Additions/Adjustments					
Water/Sewer					
1000 Gal Septic			1	4,200	567
Water Well, 100 Feet			1	5,584	754
			Totals:	54,208	7,318

Notes:
ECF (RESIDENTIAL) 1.297 => TCV: 9,491

*** Information herein deemed reliable but not guaranteed***

Parcel Number: 2410-29-2101 Jurisdiction: GREENWOOD TWP County: WEXFORD Printed on 02/15/2024

Grantor	Grantee	Sale Price	Sale Date	Inst. Type	Terms of Sale	Liber & Page	Verified By	Prcnt. Trans.
KLINE, EUGENE H	KLINE, ROBERT & JOSHUA	0	12/08/2017	QC	09-FAMILY	681/1758	DEED	0.0
KLINE, ROBERT D & KAREN L	KLINE, EUGENE H	0	07/25/2016	QC	09-FAMILY	678 /	DEED	0.0
KLINE, EUGENE & LAURILEE	KLINE, ROBERT D & KAREN L	0	03/28/2016	QC	09-FAMILY	6771/685	DEED	0.0
GUST, FRANK	GUST, STEVEN C	0	11/18/2009	QC	09-FAMILY	625/2918	DEED	50.0

Property Address

1394 KOLARVIC RD

Owner's Name/Address

KLINE, ROBERT & JOSHUA
2626 W CHIPPEWA RIVER RD
MIDLAND MI 48640

Tax Description

NE 1/4 OF NW 1/4 40 A. GW. SEC. 29 T24N R10W -MANTON-

Comments/Influences

The Equalizer. Copyright (c) 1999 - 2009. Licensed To: Township of Greenwood, County of Wexford, Michigan

Class: RESIDENTIAL-IMPROV Zoning:

School: MANTON CONSOLIDATED SCHOOLS

P.R.E. 0%

:

2024 Est TCV 127,291 TCV/TFA: 265.19

Building Permit(s)	Date	Number	Status

X	Improved		Vacant

	Public Improvements
X	Dirt Road
	Gravel Road
	Paved Road
	Storm Sewer
	Sidewalk
	Water
	Sewer
X	Electric
	Gas
	Curb
	Street Lights
	Standard Utilities
	Underground Utils.

	Topography of Site
	Level
X	Rolling
	Low
	High
	Landscaped
	Swamp
X	Wooded
	Pond
	Waterfront
	Ravine
	Wetland
	Flood Plain
X	OPEN/PINES

Who	When	What
GLA	07/10/2019	INSPECTION
GLA	07/10/2019	INSPECTION

Land Value Estimates for Land Table 4010.LAND VALUES

Description	Frontage	Depth	* Factors * Front	Depth	Rate	%Adj.	Reason	Value
	0.00	0.00	1.0000	1.0000	0	100		0
ACREAGE			40.000	Acres	2,722	100		108,880
0 Actual Front Feet, 40.00 Total Acres							Total Est. Land Value =	108,880

Year	Land Value	Building Value	Assessed Value	Board of Review	Tribunal/ Other	Taxable Value
2024	54,400	9,200	63,600			39,515C
2023	48,000	7,400	55,400			37,634C
2022	38,000	6,200	44,200			35,842C
2021	34,000	5,300	39,300			34,697C

*** Information herein deemed reliable but not guaranteed***

Building Type

	Single Family
X	Mobile Home
	Town Home
	Duplex
	A-Frame

X	Wood Frame

Building Style: SWT/DWT

Yr Built	Remodeled
0	0

Condition: Good

Room List

	Basement
	1st Floor
	2nd Floor
	Bedrooms

(1) Exterior

	Wood/Shingle
X	Aluminum/Vinyl
	Brick
X	Insulation

(2) Windows

X	Many Avg. Few	X	Large Avg. Small

	Wood Sash
	Metal Sash
X	Vinyl Sash
	Double Hung
	Horiz. Slide
	Casement
	Double Glass
	Patio Doors
X	Storms & Screens

(3) Roof

X	Gable		Gambrel
	Hip		Mansard
	Flat		Shed

X	Asphalt Shingle

Chimney:

(3) Roof (cont.)

	Eavestrough
X	Insulation
0	Front Overhang
0	Other Overhang

(4) Interior

X	Drywall		Plaster
	Paneled		Wood T&G

Trim & Decoration

	Ex	X	Ord		Min

Size of Closets

	Lg	X	Ord		Small

Doors:		Solid	X	H.C.	

(5) Floors

Kitchen:
Other: Linoleum
Other: Carpeted

(6) Ceilings

X	Drywall		

(7) Excavation

Basement: 0 S.F.
Crawl: 224 S.F.
Slab: 0 S.F.
Height to Joists: 0.0

(8) Basement

	Conc. Block
	Poured Conc.
	Stone
	Treated Wood
	Concrete Floor

(9) Basement Finish

	Recreation SF
	Living SF
	Walkout Doors (B)
	No Floor SF
	Walkout Doors (A)

(10) Floor Support

Joists:
Unsupported Len:
Cntr.Sup:

(11) Heating/Cooling

X	Gas		Oil		Elec.
	Wood		Coal		Steam

X	Forced Warm Air
	Wall Furnace
	Warm & Cool Air
	Heat Pump

	Central Air
	Wood Furnace

(12) Electric

150	Amps Service

No./Qual. of Fixtures

	Ex.	X	Ord.		Min

No. of Elec. Outlets

	Many	X	Ave.		Few

(13) Plumbing

1	Average Fixture(s)
	3 Fixture Bath
	2 Fixture Bath
	Softener, Auto
	Softener, Manual
	Solar Water Heat
	No Plumbing
	Extra Toilet
	Extra Sink
	Separate Shower
	Ceramic Tile Floor
	Ceramic Tile Wains
	Ceramic Tub Alcove
	Vent Fan

(14) Water/Sewer

	Public Water
	Public Sewer
1	Water Well
	1000 Gal Septic
	2000 Gal Septic

Lump Sum Items:

(15) Built-ins

	Appliance Allow.
	Cook Top
	Dishwasher
	Garbage Disposal
	Bath Heater
	Vent Fan
	Hot Tub
	Unvented Hood
	Vented Hood
	Intercom
	Jacuzzi Tub
	Jacuzzi repl.Tub
	Oven
	Microwave
	Standard Range
	Self Clean Range
	Sauna
	Trash Compactor
	Central Vacuum
	Security System

(15) Fireplaces

	Interior 1 Story
	Interior 2 Story
	2nd/Same Stack
	Two Sided
	Exterior 1 Story
	Exterior 2 Story
	Prefab 1 Story
	Prefab 2 Story
	Heat Circulator
	Raised Hearth
	Wood Stove
	Direct-Vented Gas

Class: Fair
Effec. Age: 25
Floor Area:
Total Base New : 40,558 E.C.F.
Total Depr Cost: 14,195 X 1.297
Estimated T.C.V: 18,411

(16) Porches/Decks

Area	Type

(17) Garage

Year Built:
Car Capacity:
Class:
Exterior:
Brick Ven.:
Stone Ven.:
Common Wall:
Foundation:
Finished ?:
Auto. Doors:
Mech. Doors:
Area:
% Good:
Storage Area:
No Conc. Floor:

Bsmnt Garage:

Carport Area:
Roof:

Cost Est. for Res. Bldg: 1 Mobile Home SWT/DWT Cls Fair Blt 0
(11) Heating System: Wall Furnace
Ground Area = 480 SF Floor Area = 480 SF.
Phy/Ab.Phy/Func/Econ/Comb. % Good=35/100/100/100/35
Building Areas

Type	Ext. Walls	Roof/Fnd.	Size	Cost New	Depr. Cost
Main Home	Ribbed	Metal	256		
Addition	Siding	Crawl	224		
			Total:	36,151	12,653
Other Additions/Adjustments					
Skirting, Metal or Vinyl, Vertical			52	580	203
Water/Sewer					
Water Well, 50 Feet			1	2,603	911
Local Cost Items					
TT			144	1,224	428
			Totals:	40,558	14,195

Notes:
ECF (RESIDENTIAL) 1.297 => TCV: 18,411

*** Information herein deemed reliable but not guaranteed***

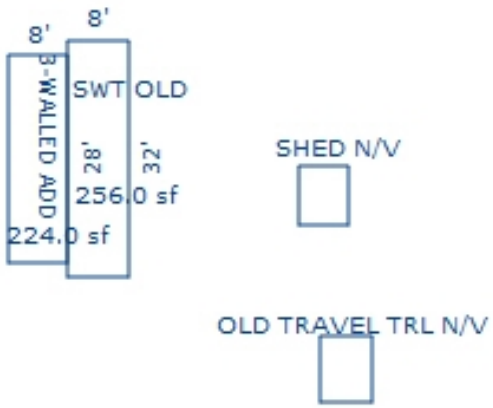

Sketch by Apex Sketch

*** Information herein deemed reliable but not guaranteed***

Parcel Number: 2410-29-3201 Jurisdiction: GREENWOOD TWP County: WEXFORD Printed on 02/15/2024

Grantor	Grantee	Sale Price	Sale Date	Inst. Type	Terms of Sale	Liber & Page	Verified By	Prcnt. Trans.
RICHARDS, DANNY J & JULIE	HITTS, JAMES B & MELISSA S	100,000	06/24/2021	MLC	03-ARM'S LENGTH	690/1381	DEED	100.0
ALTMAN, WILLIAM D		0	09/15/2017	QC	21-NOT USED/OTHER		DEED	0.0
ALTMAN, WILLIAM D	RICHARDS, DANNY J & JULIE	1	09/15/2017	QC	10-FORECLOSURE	681 /300	DEED	0.0
RICHARDS, DANNY J	ALTMAN, WILLIAM D	100,000	06/18/2016	MLC	03-ARM'S LENGTH	677 /288	DEED	100.0

Property Address
1168 KOLARVIC RD

Owner's Name/Address
HITTS, JAMES B & MELISSA S
1168 KOLARVIC RD
MANTON MI 49663

Tax Description
NW 1/4 OF SW 1/4 40 A. GW. SEC. 29 T24N R10W -MANTON-

Comments/Influences

Class: RESIDENTIAL-IMPROV Zoning:
School: MANTON CONSOLIDATED SCHOOLS
P.R.E. 100% 04/07/2022
:
2024 Est TCV 146,395 TCV/TFA: 137.59

Building Permit(s)	Date	Number	Status

X Improved | Vacant

	Public Improvements
X	Dirt Road
	Gravel Road
	Paved Road
	Storm Sewer
	Sidewalk
	Water
	Sewer
X	Electric
	Gas
	Curb
	Street Lights
	Standard Utilities
	Underground Utils.

	Topography of Site
	Level
X	Rolling
	Low
	High
	Landscaped
	Swamp
X	Wooded
	Pond
	Waterfront
	Ravine
	Wetland
	Flood Plain
X	OPEN/PINES

Who	When	What
GLA	07/10/2019	INSPECTION
GLA	07/10/2019	INSPECTION

The Equalizer. Copyright (c) 1999 - 2009. Licensed To: Township of Greenwood, County of Wexford, Michigan

Land Value Estimates for Land Table 4010.LAND VALUES

Description	Frontage	Depth	* Factors * Front	Depth	Rate	%Adj.	Reason	Value
	1000.00	0.00	1.0000	1.0000	0	100		0
ACREAGE			40.000	Acres	2,722	100		108,880
1000 Actual Front Feet, 40.00 Total Acres							Total Est. Land Value =	108,880

Land Improvement Cost Estimates

Description	Rate	Size	% Good	Cash Value
Wood Frame	24.42	240	40	2,344
Wood Frame	27.19	144	40	1,566
Total Estimated Land Improvements True Cash Value =				3,910

Year	Land Value	Building Value	Assessed Value	Board of Review	Tribunal/ Other	Taxable Value
2024	54,400	18,800	73,200			60,637C
2023	48,000	15,400	63,400			57,750C
2022	42,000	13,000	55,000			55,000S
2021	38,000	11,300	49,300			46,976C

*** Information herein deemed reliable but not guaranteed***

Building Type

	Single Family
X	Mobile Home
	Town Home
	Duplex
	A-Frame

X	Wood Frame

Building Style: SWT/DWT

Yr Built	Remodeled
0	0

Condition: Good

Room List

	Basement
	1st Floor
	2nd Floor
	Bedrooms

(1) Exterior

	Wood/Shingle
X	Aluminum/Vinyl
	Brick
X	Insulation

(2) Windows

	Many		Large
X	Avg.	X	Avg.
	Few		Small

	Wood Sash
	Metal Sash
X	Vinyl Sash
	Double Hung
	Horiz. Slide
	Casement
	Double Glass
	Patio Doors
X	Storms & Screens

(3) Roof

X	Gable		Gambrel
	Hip		Mansard
	Flat		Shed

X	Asphalt Shingle

Chimney:

(3) Roof (cont.)

	Eavestrough
X	Insulation
0	Front Overhang
0	Other Overhang

(4) Interior

X	Drywall		Plaster
	Paneled		Wood T&G

Trim & Decoration

	Ex	X	Ord		Min

Size of Closets

	Lg	X	Ord		Small

Doors:		Solid	X	H.C.	

(5) Floors

Kitchen:
Other: Linoleum
Other: Carpeted

(6) Ceilings

X	Drywall		

(7) Excavation

Basement: 0 S.F.
Crawl: 0 S.F.
Slab: 0 S.F.
Height to Joists: 0.0

(8) Basement

	Conc. Block
	Poured Conc.
	Stone
	Treated Wood
	Concrete Floor

(9) Basement Finish

	Recreation SF
	Living SF
	Walkout Doors (B)
	No Floor SF
	Walkout Doors (A)

(10) Floor Support

Joists:
Unsupported Len:
Cntr.Sup:

(11) Heating/Cooling

X	Gas		Oil		Elec.
	Wood		Coal		Steam

X	Forced Warm Air
	Wall Furnace
	Warm & Cool Air
	Heat Pump

	Central Air
	Wood Furnace

(12) Electric

150	Amps Service

No./Qual. of Fixtures

	Ex.	X	Ord.		Min

No. of Elec. Outlets

	Many	X	Ave.		Few

(13) Plumbing

2	Average Fixture(s)
	3 Fixture Bath
	2 Fixture Bath
	Softener, Auto
	Softener, Manual
	Solar Water Heat
	No Plumbing
	Extra Toilet
	Extra Sink
	Separate Shower
	Ceramic Tile Floor
	Ceramic Tile Wains
	Ceramic Tub Alcove
	Vent Fan

(14) Water/Sewer

	Public Water
	Public Sewer
1	Water Well
1	1000 Gal Septic
	2000 Gal Septic

Lump Sum Items:

(15) Built-ins

	Appliance Allow.
	Cook Top
	Dishwasher
	Garbage Disposal
	Bath Heater
	Vent Fan
	Hot Tub
	Unvented Hood
	Vented Hood
	Intercom
	Jacuzzi Tub
	Jacuzzi repl.Tub
	Oven
	Microwave
	Standard Range
	Self Clean Range
	Sauna
	Trash Compactor
	Central Vacuum
	Security System

(15) Fireplaces

	Interior 1 Story
	Interior 2 Story
	2nd/Same Stack
	Two Sided
	Exterior 1 Story
	Exterior 2 Story
	Prefab 1 Story
	Prefab 2 Story
	Heat Circulator
	Raised Hearth
	Wood Stove
	Direct-Vented Gas

Class: Fair
Effec. Age: 25
Floor Area:
Total Base New : 74,031 E.C.F.
Total Depr Cost: 25,910 X 1.297
Estimated T.C.V: 33,605

(16) Porches/Decks

Area	Type
144	WPP
48	4in Concrete

(17) Garage

Year Built:
Car Capacity:
Class:
Exterior:
Brick Ven.:
Stone Ven.:
Common Wall:
Foundation:
Finished ?:
Auto. Doors:
Mech. Doors:
Area:
% Good:
Storage Area:
No Conc. Floor:

Bsmnt Garage:

Carport Area:
Roof:

Cost Est. for Res. Bldg: 1 Mobile Home SWT/DWT Cls Fair Blt 0
(11) Heating System: Wall Furnace
Ground Area = 1064 SF Floor Area = 1064 SF.
Phy/Ab.Phy/Func/Econ/Comb. % Good=35/100/100/100/35
Building Areas

Type	Ext. Walls	Roof/Fnd.	Size	Cost New	Depr. Cost
Main Home	Ribbed	Metal	1064		
			Total:	52,977	18,542
Other Additions/Adjustments					
Skirting, Metal or Vinyl, Vertical			180	2,007	702
Plumbing					
3 Fixture Bath			1	2,745	961
Water/Sewer					
1000 Gal Septic			1	4,582	1,604
Water Well, 100 Feet			1	5,680	1,988
Porches					
WPP			144	3,407	1,192
4in Concrete			48	355	124
Local Cost Items					
SHED			292	2,278	797
			Totals:	74,031	25,910

Notes:

ECF (RESIDENTIAL) 1.297 => TCV: 33,605

*** Information herein deemed reliable but not guaranteed***

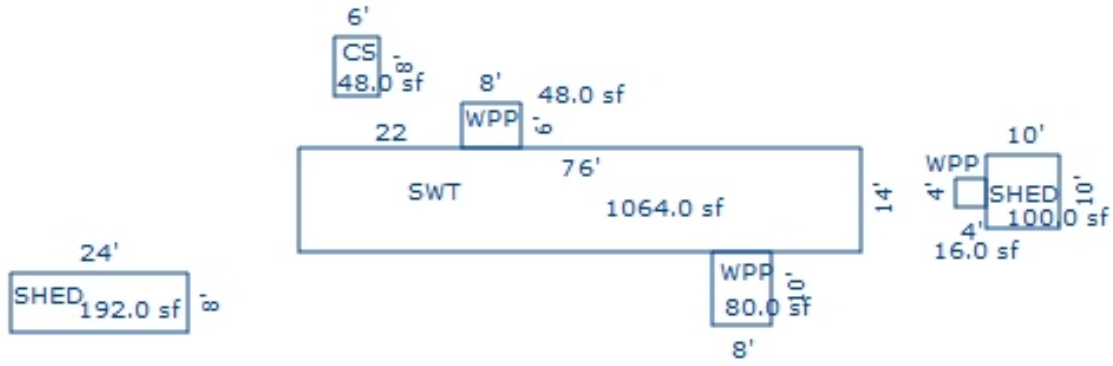

Sketch by Apex Sketch

*** Information herein deemed reliable but not guaranteed***

Parcel Number: 2410-29-4201 Jurisdiction: GREENWOOD TWP County: WEXFORD Printed on 02/15/2024

Grantor	Grantee	Sale Price	Sale Date	Inst. Type	Terms of Sale	Liber & Page	Verified By	Prcnt. Trans.
WOODIN, DONALD L & RUBY N	WOODIN, DONALD L & RUBY N	100	11/13/2020	QC	18-LIFE ESTATE	688/1878	AGENT	0.0

Property Address

1649 E 12 RD

Owner's Name/Address

WOODIN, DONALD L & RUBY N LE
4427 BALDWIN RD
METAMORA MI 48455

Tax Description

NW 1/4 OF SE 1/4 40 A. GW. SEC. 29 T24N R10W -MANTON-

Comments/Influences

Class: RESIDENTIAL-IMPROV Zoning:

School: MANTON CONSOLIDATED SCHOOLS

P.R.E. 0%

:

2024 Est TCV 162,932 TCV/TFA: 284.85

Building Permit(s)	Date	Number	Status

X Improved | Vacant

	Public Improvements
X	Dirt Road
	Gravel Road
	Paved Road
	Storm Sewer
	Sidewalk
	Water
	Sewer
X	Electric
	Gas
	Curb
	Street Lights
	Standard Utilities
	Underground Utils.

	Topography of Site
	Level
X	Rolling
	Low
	High
	Landscaped
	Swamp
X	Wooded
	Pond
	Waterfront
	Ravine
	Wetland
	Flood Plain
X	OPEN/PINES

Who	When	What
GLA	07/10/2019	INSPECTION
GLA	07/10/2019	INSPECTION

Land Value Estimates for Land Table 4010.LAND VALUES

Description	Frontage	Depth	* Factors * Front	Depth	Rate	%Adj.	Reason	Value
	1400.00	0.00	1.0000	1.0000	0	100		0
ACREAGE			40.000 Acres		2,722	100		108,880
1400 Actual Front Feet, 40.00 Total Acres							Total Est. Land Value =	108,880

Land Improvement Cost Estimates

Description	Rate	Size	% Good	Cash Value
Metal Prefab	16.95	160	40	1,085
Total Estimated Land Improvements True Cash Value =				1,085

Year	Land Value	Building Value	Assessed Value	Board of Review	Tribunal/ Other	Taxable Value
2024	54,400	27,100	81,500			29,979C
2023	48,000	21,800	69,800			28,552C
2022	43,600	18,200	61,800			27,193C
2021	39,600	18,200	57,800			26,325C

The Equalizer. Copyright (c) 1999 - 2009. Licensed To: Township of Greenwood, County of Wexford, Michigan

*** Information herein deemed reliable but not guaranteed***

Building Type

X	Single Family
	Mobile Home
	Town Home
	Duplex
	A-Frame
X	Wood Frame

Building Style: PLAIN

Yr Built	Remodeled
0	0

Condition: Good

Room List

	Basement
	1st Floor
	2nd Floor
	Bedrooms

(1) Exterior

	Wood/Shingle
	Aluminum/Vinyl
	Brick
X	Block
X	Insulation

(2) Windows

	Many		Large
X	Avg.	X	Avg.
	Few		Small

	Wood Sash
X	Metal Sash
	Vinyl Sash
	Double Hung
	Horiz. Slide
	Casement
	Double Glass
	Patio Doors
X	Storms & Screens

(3) Roof

X	Gable		Gambrel
	Hip		Mansard
	Flat		Shed

X	Asphalt Shingle

Chimney:

(3) Roof (cont.)

	Eavestrough
X	Insulation
0	Front Overhang
0	Other Overhang

(4) Interior

X	Drywall		Plaster
	Paneled		Wood T&G

Trim & Decoration

	Ex	X	Ord		Min

Size of Closets

	Lg	X	Ord		Small

Doors:		Solid	X	H.C.	

(5) Floors

Kitchen:
Other: Linoleum
Other: Carpeted

(6) Ceilings

X	Drywall		

(7) Excavation

Basement: 0 S.F.
Crawl: 0 S.F.
Slab: 572 S.F.
Height to Joists: 0.0

(8) Basement

	Conc. Block
	Poured Conc.
	Stone
	Treated Wood
	Concrete Floor

(9) Basement Finish

	Recreation SF
	Living SF
	Walkout Doors (B)
	No Floor SF
	Walkout Doors (A)

(10) Floor Support

Joists:
Unsupported Len:
Cntr.Sup:

(11) Heating/Cooling

X	Gas		Oil		Elec.
	Wood		Coal		Steam

	Forced Air w/o Ducts
X	Forced Air w/ Ducts
	Forced Hot Water
	Electric Baseboard
	Elec. Ceil. Radiant
	Radiant (in-floor)
	Electric Wall Heat
	Space Heater
	Wall/Floor Furnace
	Forced Heat & Cool
	Heat Pump
	No Heating/Cooling

	Central Air
	Wood Furnace

(12) Electric

150	Amps Service

No./Qual. of Fixtures

	Ex.	X	Ord.		Min

No. of Elec. Outlets

	Many	X	Ave.		Few

(13) Plumbing

	Average Fixture(s)
1	3 Fixture Bath
	2 Fixture Bath
	Softener, Auto
	Softener, Manual
	Solar Water Heat
	No Plumbing
	Extra Toilet
	Extra Sink
	Separate Shower
	Ceramic Tile Floor
	Ceramic Tile Wains
	Ceramic Tub Alcove
	Vent Fan

(14) Water/Sewer

	Public Water
	Public Sewer
1	Water Well
1	1000 Gal Septic
	2000 Gal Septic

Lump Sum Items:

(15) Built-ins

	Appliance Allow.
	Cook Top
	Dishwasher
	Garbage Disposal
	Bath Heater
	Vent Fan
	Hot Tub
	Unvented Hood
	Vented Hood
	Intercom
	Jacuzzi Tub
	Jacuzzi repl.Tub
	Oven
	Microwave
	Standard Range
	Self Clean Range
	Sauna
	Trash Compactor
	Central Vacuum
	Security System

(15) Fireplaces

	Interior 1 Story
	Interior 2 Story
	2nd/Same Stack
	Two Sided
	Exterior 1 Story
	Exterior 2 Story
	Prefab 1 Story
	Prefab 2 Story
	Heat Circulator
	Raised Hearth
	Wood Stove
	Direct-Vented Gas

Class: CD
Effec. Age: 59
Floor Area: 572
Total Base New : 90,750 E.C.F.
Total Depr Cost: 40,838 X 1.297
Estimated T.C.V: 52,967

(16) Porches/Decks

Area	Type
168	CGEP (1 Story)

(17) Garage

Year Built:
Car Capacity:
Class:
Exterior:
Brick Ven.:
Stone Ven.:
Common Wall:
Foundation:
Finished ?:
Auto. Doors:
Mech. Doors:
Area:
% Good:
Storage Area:
No Conc. Floor:

Bsmnt Garage:

Carport Area:
Roof:

Cost Est. for Res. Bldg: 1 Single Family PLAIN Cls CD Blt 0
(11) Heating System: Forced Air w/ Ducts
Ground Area = 572 SF Floor Area = 572 SF.
Phy/Ab.Phy/Func/Econ/Comb. % Good=45/100/100/100/45
Building Areas

Stories	Exterior	Foundation	Size	Cost New	Depr. Cost
1 Story	Siding	Slab	572		
			Total:	70,660	31,797
Other Additions/Adjustments					
Water/Sewer					
1000 Gal Septic			1	4,582	2,062
Water Well, 100 Feet			1	5,680	2,556
Porches					
CGEP (1 Story)			168	9,828	4,423
			Totals:	90,750	40,838

Notes:

ECF (RESIDENTIAL) 1.297 => TCV: 52,967

*** Information herein deemed reliable but not guaranteed***

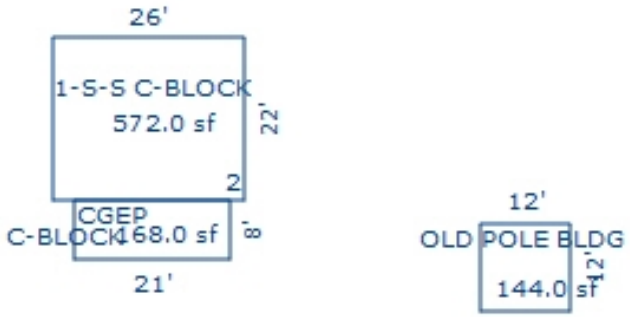

Sketch by Apex Sketch

*** Information herein deemed reliable but not guaranteed***

Parcel Number: 2410-29-4301 Jurisdiction: GREENWOOD TWP County: WEXFORD Printed on 02/15/2024

Grantor	Grantee	Sale Price	Sale Date	Inst. Type	Terms of Sale	Liber & Page	Verified By	Prcnt. Trans.
POWELL, GERTRUDE M.	HAYNES, GARNET & LINDA	103,000	08/29/2003	WD	03-ARM'S LENGTH	511:510	DEED	0.0
	HAYNES, GARNET	103,000	08/01/2003	WD	03-ARM'S LENGTH	511/510	DEED	0.0

Property Address	Class: RESIDENTIAL-IMPROV	Zoning:	Building Permit(s)	Date	Number	Status
1651 E 12 RD	School: MANTON CONSOLIDATED SCHOOLS					
	P.R.E. 0%					
Owner's Name/Address	:					
HAYNES, GARNET & LINDA 8088 COLF CARLETON MI 48117	2024 Est TCV 175,902 TCV/TFA: 82.82					

X Improved | Vacant

Land Value Estimates for Land Table 4010.LAND VALUES

Description	Frontage	Depth	* Factors * Front	Depth	Rate	%Adj.	Reason	Value
	100.00	0.00	1.0000	1.0000	0	100		0
ACREAGE			40.000	Acres	2,722	100		108,880
100 Actual Front Feet, 40.00 Total Acres							Total Est. Land Value =	108,880

Tax Description

SW 1/4 OF SE 1/4 40 A. GW. SEC. 29 T24N R10W -MANTON-

Comments/Influences

Public Improvements

- X Dirt Road
- Gravel Road
- Paved Road
- Storm Sewer
- Sidewalk
- Water
- Sewer
- X Electric
- Gas
- Curb
- Street Lights
- Standard Utilities
- Underground Utils.

Topography of Site

- Level
- X Rolling
- Low
- High
- Landscaped
- X Swamp
- X Wooded
- Pond
- Waterfront
- Ravine
- Wetland
- Flood Plain
- X OPEN/PINES

Who	When	What
GLA	07/10/2019	INSPECTION
GLA	07/10/2019	INSPECTION

Year	Land Value	Building Value	Assessed Value	Board of Review	Tribunal/ Other	Taxable Value
2024	54,400	33,600	88,000			55,893C
2023	48,000	27,000	75,000			53,232C
2022	38,400	22,500	60,900			50,698C
2021	34,400	19,300	53,700			49,079C

The Equalizer. Copyright (c) 1999 - 2009. Licensed To: Township of Greenwood, County of Wexford, Michigan

*** Information herein deemed reliable but not guaranteed***

Building Type

	Single Family
X	Mobile Home
	Town Home
	Duplex
	A-Frame

X	Wood Frame

Building Style: SWT/DWT

Yr Built	Remodeled
0	0

Condition: Good

Room List

	Basement
	1st Floor
	2nd Floor
	Bedrooms

(1) Exterior

X	Wood/Shingle
	Aluminum/Vinyl
	Brick
	Insulation

(2) Windows

	Many		Large
X	Avg.	X	Avg.
	Few		Small

	Wood Sash
	Metal Sash
	Vinyl Sash
	Double Hung
	Horiz. Slide
	Casement
	Double Glass
	Patio Doors
	Storms & Screens

(3) Roof

	Gable		Gambrel
	Hip		Mansard
	Flat		Shed

X	Asphalt Shingle

Chimney: Brick

(3) Roof (cont.)

	Eavestrough
	Insulation
0	Front Overhang
0	Other Overhang

(4) Interior

	Drywall		Plaster
	Paneled		Wood T&G

Trim & Decoration

	Ex	X	Ord		Min

Size of Closets

	Lg	X	Ord		Small

Doors:		Solid	X	H.C.	

(5) Floors

Kitchen:
Other:
Other:

(6) Ceilings

(7) Excavation

Basement: 0 S.F.
Crawl: 0 S.F.
Slab: 0 S.F.
Height to Joists: 0.0

(8) Basement

	Conc. Block
	Poured Conc.
	Stone
	Treated Wood
	Concrete Floor

(9) Basement Finish

	Recreation	SF
	Living	SF
	Walkout Doors (B)	
	No Floor	SF
	Walkout Doors (A)	

(10) Floor Support

Joists:
Unsupported Len:
Cntr.Sup:

(11) Heating/Cooling

X	Gas		Oil		Elec.
	Wood		Coal		Steam

X	Forced Warm Air
	Wall Furnace
	Warm & Cool Air
	Heat Pump

	Central Air
	Wood Furnace

(12) Electric

0	Amps Service

No./Qual. of Fixtures

	Ex.	X	Ord.		Min

No. of Elec. Outlets

	Many	X	Ave.		Few

(13) Plumbing

1	Average Fixture(s)
	3 Fixture Bath
	2 Fixture Bath
	Softener, Auto
	Softener, Manual
	Solar Water Heat
	No Plumbing
	Extra Toilet
	Extra Sink
	Separate Shower
	Ceramic Tile Floor
	Ceramic Tile Wains
	Ceramic Tub Alcove
	Vent Fan

(14) Water/Sewer

	Public Water
	Public Sewer
1	Water Well
1	1000 Gal Septic
	2000 Gal Septic

Lump Sum Items:

(15) Built-ins

	Appliance Allow.
	Cook Top
	Dishwasher
	Garbage Disposal
	Bath Heater
	Vent Fan
	Hot Tub
	Unvented Hood
	Vented Hood
	Intercom
	Jacuzzi Tub
	Jacuzzi repl.Tub
	Oven
	Microwave
	Standard Range
	Self Clean Range
	Sauna
	Trash Compactor
	Central Vacuum
	Security System

(15) Fireplaces

	Interior 1 Story
	Interior 2 Story
	2nd/Same Stack
	Two Sided
	Exterior 1 Story
	Exterior 2 Story
	Prefab 1 Story
	Prefab 2 Story
	Heat Circulator
	Raised Hearth
	Wood Stove
	Direct-Vented Gas

Class: Low
Effec. Age: 25
Floor Area:
Total Base New : 42,515 E.C.F.
Total Depr Cost: 14,879 X 1.297
Estimated T.C.V: 19,298

(16) Porches/Decks

Area	Type
140	WSEP (1 Story)

(17) Garage

Year Built:
Car Capacity:
Class:
Exterior:
Brick Ven.:
Stone Ven.:
Common Wall:
Foundation:
Finished ?:
Auto. Doors:
Mech. Doors:
Area:
% Good:
Storage Area:
No Conc. Floor:

Bsmnt Garage:

Carport Area:
Roof:

Cost Est. for Res. Bldg: 1 Mobile Home SWT/DWT Cls Low Blt 0
(11) Heating System: Forced Warm Air
Ground Area = 420 SF Floor Area = 420 SF.
Phy/Ab.Phy/Func/Econ/Comb. % Good=35/100/100/100/35
Building Areas

Type	Ext. Walls	Roof/Fnd.	Size	Cost New	Depr. Cost
Main Home	Ribbed	Metal	420		
			Total:	27,207	9,521
Other Additions/Adjustments					
Skirting, Metal or Vinyl, Vertical			104	1,129	395
Water/Sewer					
1000 Gal Septic			1	4,293	1,503
Water Well, 100 Feet			1	5,545	1,941
Porches					
WSEP (1 Story)			140	4,341	1,519
			Totals:	42,515	14,879

Notes:

ECF (RESIDENTIAL) 1.297 => TCV: 19,298

*** Information herein deemed reliable but not guaranteed***

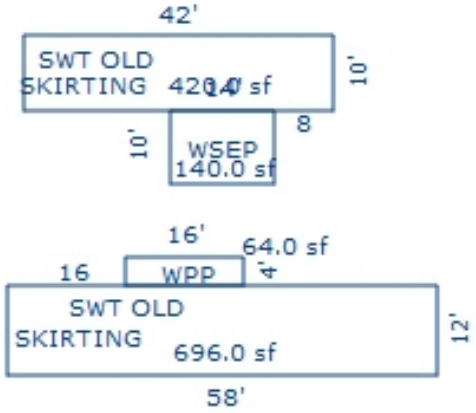

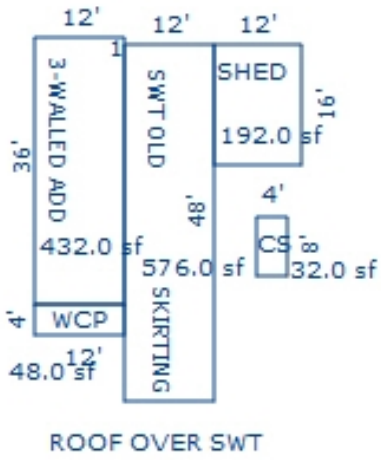

ROOF OVER SWT

Sketch by Apex Sketch

*** Information herein deemed reliable but not guaranteed***

Building Type

	Single Family
X	Mobile Home
	Town Home
	Duplex
	A-Frame

X	Wood Frame

Building Style: SWT/DWT

Yr Built	Remodeled
0	0

Condition: Good

Room List

	Basement
	1st Floor
	2nd Floor
	Bedrooms

(1) Exterior

X	Wood/Shingle
	Aluminum/Vinyl
	Brick
	Insulation

(2) Windows

X	Many Avg. Few	X	Large Avg. Small

	Wood Sash
	Metal Sash
	Vinyl Sash
	Double Hung
	Horiz. Slide
	Casement
	Double Glass
	Patio Doors
	Storms & Screens

(3) Roof

X	Gable		Gambrel
	Hip		Mansard
	Flat		Shed

X	Asphalt Shingle

Chimney: Brick

(3) Roof (cont.)

	Eavestrough
	Insulation
0	Front Overhang
0	Other Overhang

(4) Interior

	Drywall		Plaster
	Paneled		Wood T&G

Trim & Decoration

	Ex	X	Ord		Min

Size of Closets

	Lg	X	Ord		Small

Doors:		Solid	X	H.C.	

(5) Floors

Kitchen:
Other:
Other:

(6) Ceilings

(7) Excavation

Basement: 0 S.F.
Crawl: 0 S.F.
Slab: 0 S.F.
Height to Joists: 0.0

(8) Basement

	Conc. Block
	Poured Conc.
	Stone
	Treated Wood
	Concrete Floor

(9) Basement Finish

	Recreation SF
	Living SF
	Walkout Doors (B)
	No Floor SF
	Walkout Doors (A)

(10) Floor Support

Joists:
Unsupported Len:
Cntr.Sup:

(11) Heating/Cooling

X	Gas		Oil		Elec.
	Wood		Coal		Steam

X	Forced Warm Air
	Wall Furnace
	Warm & Cool Air
	Heat Pump

	Central Air
	Wood Furnace

(12) Electric

0	Amps Service

No./Qual. of Fixtures

	Ex.	X	Ord.		Min

No. of Elec. Outlets

	Many	X	Ave.		Few

(13) Plumbing

1	Average Fixture(s)
	3 Fixture Bath
	2 Fixture Bath
	Softener, Auto
	Softener, Manual
	Solar Water Heat
	No Plumbing
	Extra Toilet
	Extra Sink
	Separate Shower
	Ceramic Tile Floor
	Ceramic Tile Wains
	Ceramic Tub Alcove
	Vent Fan

(14) Water/Sewer

	Public Water
	Public Sewer
	Water Well
	1000 Gal Septic
	2000 Gal Septic

Lump Sum Items:

(15) Built-ins

	Appliance Allow.
	Cook Top
	Dishwasher
	Garbage Disposal
	Bath Heater
	Vent Fan
	Hot Tub
	Unvented Hood
	Vented Hood
	Intercom
	Jacuzzi Tub
	Jacuzzi repl.Tub
	Oven
	Microwave
	Standard Range
	Self Clean Range
	Sauna
	Trash Compactor
	Central Vacuum
	Security System

(15) Fireplaces

	Interior 1 Story
	Interior 2 Story
	2nd/Same Stack
	Two Sided
	Exterior 1 Story
	Exterior 2 Story
	Prefab 1 Story
	Prefab 2 Story
	Heat Circulator
	Raised Hearth
	Wood Stove
	Direct-Vented Gas

Class: Low
Effec. Age: 25
Floor Area:
Total Base New : 41,454 E.C.F.
Total Depr Cost: 14,509 X 1.297
Estimated T.C.V: 18,818

(16) Porches/Decks

Area	Type
64	WPP

(17) Garage

Year Built:
Car Capacity:
Class:
Exterior:
Brick Ven.:
Stone Ven.:
Common Wall:
Foundation:
Finished ?:
Auto. Doors:
Mech. Doors:
Area:
% Good:
Storage Area:
No Conc. Floor:

Bsmnt Garage:

Carport Area:
Roof:

Cost Est. for Res. Bldg: 2 Mobile Home SWT/DWT Cls Low Blt 0
(11) Heating System: Forced Warm Air
Ground Area = 696 SF Floor Area = 696 SF.
Phy/Ab.Phy/Func/Econ/Comb. % Good=35/100/100/100/35
Building Areas

Type	Ext. Walls	Roof/Fnd.	Size	Cost New	Depr. Cost
Main Home	Ribbed	Metal	696		
			Total:	37,972	13,290
Other Additions/Adjustments					
Skirting, Metal or Vinyl, Vertical			140	1,520	532
Porches					
WPP			64	1,962	687
			Totals:	41,454	14,509

Notes:

ECF (RESIDENTIAL) 1.297 => TCV: 18,818

*** Information herein deemed reliable but not guaranteed***

Building Type

	Single Family
X	Mobile Home
	Town Home
	Duplex
	A-Frame

X	Wood Frame

Building Style: SWT/DWT

Yr Built	Remodeled
0	0

Condition: Good

Room List

	Basement
	1st Floor
	2nd Floor
	Bedrooms

(1) Exterior

X	Wood/Shingle
	Aluminum/Vinyl
	Brick
	Insulation

(2) Windows

X	Many Avg. Few		Large Avg. Small

	Wood Sash
	Metal Sash
	Vinyl Sash
	Double Hung
	Horiz. Slide
	Casement
	Double Glass
	Patio Doors
	Storms & Screens

(3) Roof

X	Gable		Gambrel
	Hip		Mansard
	Flat		Shed

X	Asphalt Shingle

Chimney: Brick

(3) Roof (cont.)

	Eavestrough
	Insulation
0	Front Overhang
0	Other Overhang

(4) Interior

	Drywall Paneled		Plaster Wood T&G

Trim & Decoration

	Ex	X	Ord		Min

Size of Closets

	Lg	X	Ord		Small

Doors:		Solid	X	H.C.	

(5) Floors

Kitchen:
Other:
Other:

(6) Ceilings

(7) Excavation

Basement: 0 S.F.
Crawl: 432 S.F.
Slab: 0 S.F.
Height to Joists: 0.0

(8) Basement

	Conc. Block
	Poured Conc.
	Stone
	Treated Wood
	Concrete Floor

(9) Basement Finish

	Recreation SF
	Living SF
	Walkout Doors (B)
	No Floor SF
	Walkout Doors (A)

(10) Floor Support

Joists:
Unsupported Len:
Cntr.Sup:

(11) Heating/Cooling

X	Gas		Oil		Elec.	
	Wood		Coal		Steam	

X	Forced Warm Air
	Wall Furnace
	Warm & Cool Air
	Heat Pump

	Central Air
	Wood Furnace

(12) Electric

0	Amps Service

No./Qual. of Fixtures

	Ex.	X	Ord.		Min

No. of Elec. Outlets

	Many	X	Ave.		Few

(13) Plumbing

1	Average Fixture(s)
	3 Fixture Bath
	2 Fixture Bath
	Softener, Auto
	Softener, Manual
	Solar Water Heat
	No Plumbing
	Extra Toilet
	Extra Sink
	Separate Shower
	Ceramic Tile Floor
	Ceramic Tile Wains
	Ceramic Tub Alcove
	Vent Fan

(14) Water/Sewer

	Public Water
	Public Sewer
	Water Well
	1000 Gal Septic
	2000 Gal Septic

Lump Sum Items:

(15) Built-ins

	Appliance Allow.
	Cook Top
	Dishwasher
	Garbage Disposal
	Bath Heater
	Vent Fan
	Hot Tub
	Unvented Hood
	Vented Hood
	Intercom
	Jacuzzi Tub
	Jacuzzi repl.Tub
	Oven
	Microwave
	Standard Range
	Self Clean Range
	Sauna
	Trash Compactor
	Central Vacuum
	Security System

(15) Fireplaces

	Interior 1 Story
	Interior 2 Story
	2nd/Same Stack
	Two Sided
	Exterior 1 Story
	Exterior 2 Story
	Prefab 1 Story
	Prefab 2 Story
	Heat Circulator
	Raised Hearth
	Wood Stove
	Direct-Vented Gas

Class: Low
Effec. Age: 25
Floor Area:
Total Base New : 63,681 E.C.F.
Total Depr Cost: 22,287 X 1.297
Estimated T.C.V: 28,906

(16) Porches/Decks

Area	Type
48	WCP (1 Story)
32	4in Concrete

(17) Garage

Year Built:
Car Capacity:
Class:
Exterior:
Brick Ven.:
Stone Ven.:
Common Wall:
Foundation:
Finished ?:
Auto. Doors:
Mech. Doors:
Area:
% Good:
Storage Area:
No Conc. Floor:

Bsmnt Garage:

Carport Area:
Roof:

Cost Est. for Res. Bldg: 3 Mobile Home SWT/DWT Cls Low Blt 0
(11) Heating System: Forced Warm Air
Ground Area = 1008 SF Floor Area = 1008 SF.
Phy/Ab.Phy/Func/Econ/Comb. % Good=35/100/100/100/35
Building Areas

Type	Ext. Walls	Roof/Fnd.	Size	Cost New	Depr. Cost
Main Home	Ribbed	Metal	576		
Addition	Siding	Crawl	432		
			Total:	59,113	20,688
Other Additions/Adjustments					
Skirting, Metal or Vinyl, Vertical			52	565	198
Porches					
WCP (1 Story)			48	2,292	802
4in Concrete			32	213	75
Local Cost Items					
SHED			192	1,498	524
			Totals:	63,681	22,287

Notes:

ECF (RESIDENTIAL) 1.297 => TCV: 28,906

*** Information herein deemed reliable but not guaranteed***

Parcel Number: 2410-30-1101 Jurisdiction: GREENWOOD TWP County: WEXFORD Printed on 02/15/2024

Grantor	Grantee	Sale Price	Sale Date	Inst. Type	Terms of Sale	Liber & Page	Verified By	Prcnt. Trans.

Property Address	Class: AGRICULTURAL-VACAN	Zoning:	Building Permit(s)	Date	Number	Status
	School: MANTON CONSOLIDATED SCHOOLS					
	P.R.E. 0%					
Owner's Name/Address	:					
STATE OF MICHIGAN P O BOX 30735 GRANTS ADMINISTRATION LANSING MI 48909-8235	2024 Est TCV 0					

Tax Description

ENTIRE FRL SEC. 30 EXC FRL S 1/2 OF FRL SW 1/4 & EXC PT OF SW 1/4 OF SE 1/4 DESC AS BEG AT S 1/4 COR OF SD SEC; N 867.69 FT TO POB; N 107.33 FT TO C/L OF N 27 RD; S35*42'23"E 90.58 FT; S59*20'07"W 66.08 FT TO POB --531.51 A.-- GW. SEC. 30 T24N RLOW -MANTON-

Comments/Influences

	Improved	X	Vacant

	Public Improvements
	Dirt Road
X	Gravel Road
	Paved Road
	Storm Sewer
	Sidewalk
	Water
	Sewer
X	Electric
	Gas
	Curb
	Street Lights
	Standard Utilities
	Underground Utils.

	Topography of Site
	Level
X	Rolling
	Low
	High
	Landscaped
X	Swamp
X	Wooded
	Pond
	Waterfront
	Ravine
	Wetland
	Flood Plain
X	OPEN/PINES

Who	When	What
GLA	07/10/2019	INSPECTION
GLA	07/10/2019	INSPECTION

Land Value Estimates for Land Table 4010.LAND VALUES

Description	Frontage	Depth	* Factors * Front	Depth	Rate	%Adj.	Reason	Value
ACREAGE			531.510 Acres		2,480	100		1,318,145
			531.51 Total Acres		Total Est. Land Value =			1,318,145

Year	Land Value	Building Value	Assessed Value	Board of Review	Tribunal/ Other	Taxable Value
2024	EXEMPT	EXEMPT	EXEMPT			EXEMPT
2023	EXEMPT	EXEMPT	EXEMPT			EXEMPT
2022	0	0	0			0
2021	0	0	0			0

The Equalizer. Copyright (c) 1999 - 2009. Licensed To: Township of Greenwood, County of Wexford, Michigan

*** Information herein deemed reliable but not guaranteed***

Parcel Number: 2410-30-3301-01 Jurisdiction: GREENWOOD TWP County: WEXFORD Printed on 02/15/2024

Grantor	Grantee	Sale Price	Sale Date	Inst. Type	Terms of Sale	Liber & Page	Verified By	Prcnt. Trans.
LEHR, JOYCE ALICE	KUEHNE, BRYAN	51,250	02/28/2023	WD	08-ESTATE	694/2394	DEED	100.0
LEHR, HOWARD E.	LEHR, JOYCE ALICE	0	09/20/2022	PTA	09-FAMILY	PTA	DEED	0.0

Property Address

Owner's Name/Address

KUEHNE, BRYAN
1077 HILLCREST DR
BOON MI 49618

Tax Description

BEG AT SW 1/4 COR OF SEC: N 1049.37 FT; N65D15M29S E 572.49 FT; E 7.49 FT; S 1300.04 FT; W 521.35 FT TO POB. --14.02 A M/L-- GW. SEC. 30 T24N R10W -MANTON-SPLIT ON 10/03/2007 FROM 2410-30-3301;

Comments/Influences

Split/Comb. on 10/03/2007 completed / / DEB OWNER REQUEST ;
Parent Parcel(s): 2410-30-3301;
Child Parcel(s): 2410-30-3301-01, 2410-30-3301-02;

Class: RESIDENTIAL-VACANT Zoning:

School: MANTON CONSOLIDATED SCHOOLS

P.R.E. 0%

:

2024 Est TCV 47,532

Building Permit(s)	Date	Number	Status

	Improved	X	Vacant

	Public Improvements
X	Dirt Road
X	Gravel Road
	Paved Road
	Storm Sewer
	Sidewalk
	Water
	Sewer
X	Electric
	Gas
	Curb
	Street Lights
	Standard Utilities
	Underground Utils.

	Topography of Site
	Level
X	Rolling
	Low
	High
	Landscaped
	Swamp
X	Wooded
	Pond
	Waterfront
	Ravine
	Wetland
	Flood Plain
X	OPEN/PINES

Who	When	What
GLA	07/10/2019	INSPECTION
GLA	07/10/2019	INSPECTION

Land Value Estimates for Land Table 4010.LAND VALUES

Description	Frontage	Depth	* Factors * Front	Depth	Rate	%Adj.	Reason	Value
	200.00	0.00	1.0000	1.0000	0	100		0
ACREAGE			13.583 Acres		3,499	100		47,532
ROW			0.437 Acres		0	100		0
200 Actual Front Feet, 14.02 Total Acres							Total Est. Land Value =	47,532

Year	Land Value	Building Value	Assessed Value	Board of Review	Tribunal/ Other	Taxable Value
2024	23,800	0	23,800			23,800S
2023	17,700	0	17,700			5,519C
2022	16,600	0	16,600			5,257C
2021	17,100	0	17,100			5,090C

The Equalizer. Copyright (c) 1999 - 2009.
Licensed To: Township of Greenwood, County of Wexford, Michigan

*** Information herein deemed reliable but not guaranteed***

Parcel Number: 2410-30-3301-02 Jurisdiction: GREENWOOD TWP County: WEXFORD Printed on 02/15/2024

Grantor	Grantee	Sale Price	Sale Date	Inst. Type	Terms of Sale	Liber & Page	Verified By	Prcnt. Trans.
CARLSON, JAMES D	JACKSON, BENJAMIN L	10,000	09/25/2017	WD	03-ARM'S LENGTH	6813/58	DEED	100.0
LEHR, HOWARD E. & JOYCE A	CARLSON, JAMES D	0	08/27/2007	QC	21-NOT USED/OTHER	604/2855	DEED	100.0

Property Address

Owner's Name/Address

JACKSON, BENJAMIN L
4011 W 4 RD
BUCKLEY MI 49620

Tax Description

PAR A; COM AT SW 1/4 COR OF SEC; N 1049.37 FT TO POB: N 249.12 FT; E 508.76 FT; S65D15M29S W 572.49 FT TO POB.--1.45 A M/L-- GW. SEC. 30 T24N R10W -MANTON-SPLIT ON 10/03/2007 FROM 2410-30-3301;

Comments/Influences

SPLIT/COMB. ON 10/03/2007 COMPLETED 12/01/2008 DEB OWNER REQUEST ;
PARENT PARCEL(S): 2410-30-3301;
CHILD PARCEL(S): 2410-30-3301-01, 2410-30-3301-02;

The Equalizer. Copyright (c) 1999 - 2009. Licensed To: Township of Greenwood, County of Wexford, Michigan

Class: RESIDENTIAL-IMPROV Zoning:

School: MANTON CONSOLIDATED SCHOOLS

P.R.E. 0%

:

2024 Est TCV 13,338 TCV/TFA: 0.00

Building Permit(s)	Date	Number	Status

X Improved | Vacant

	Public Improvements
	Dirt Road
X	Gravel Road
	Paved Road
	Storm Sewer
	Sidewalk
	Water
	Sewer
X	Electric
	Gas
	Curb
	Street Lights
	Standard Utilities
	Underground Utils.

	Topography of Site
	Level
X	Rolling
	Low
	High
	Landscaped
	Swamp
X	Wooded
	Pond
	Waterfront
	Ravine
	Wetland
	Flood Plain

Who	When	What
GLA	07/10/2019	INSPECTION
GLA	07/10/2019	INSPECTION

Land Value Estimates for Land Table 4010.LAND VALUES

Description	Frontage	Depth	* Factors * Front	Depth	Rate	%Adj.	Reason	Value
	249.10	508.80	1.0000	0.0000	0	100*		0
ACREAGE			1.016 Acres		10,953	100		11,128
ROW			0.434 Acres		0	100		0

* denotes lines that do not contribute to the total acreage calculation.
249 Actual Front Feet, 1.45 Total Acres Total Est. Land Value = 11,128

Year	Land Value	Building Value	Assessed Value	Board of Review	Tribunal/ Other	Taxable Value
2024	5,600	1,100	6,700			3,057C
2023	3,000	1,000	4,000			2,912C
2022	2,500	900	3,400			2,774C
2021	3,000	1,000	4,000			2,686C

*** Information herein deemed reliable but not guaranteed***

Building Type

X	Single Family
	Mobile Home
	Town Home
	Duplex
	A-Frame
X	Wood Frame

Building Style: PLAIN

Yr Built	Remodeled
0	0

Condition: Good

Room List

	Basement
	1st Floor
	2nd Floor
	Bedrooms

(1) Exterior

X	Wood/Shingle
	Aluminum/Vinyl
	Brick
X	Insulation

(2) Windows

X	Many		Large
	Avg.	X	Avg.
	Few		Small

	Wood Sash
	Metal Sash
X	Vinyl Sash
	Double Hung
	Horiz. Slide
	Casement
	Double Glass
	Patio Doors
X	Storms & Screens

(3) Roof

X	Gable		Gambrel
	Hip		Mansard
	Flat		Shed

X	Asphalt Shingle

Chimney:

(3) Roof (cont.)

	Eavestrough
X	Insulation
0	Front Overhang
0	Other Overhang

(4) Interior

X	Drywall		Plaster
	Paneled		Wood T&G

Trim & Decoration

	Ex	X	Ord		Min

Size of Closets

	Lg	X	Ord		Small

Doors:		Solid	X	H.C.	

(5) Floors

Kitchen:
Other: Linoleum
Other: Carpeted

(6) Ceilings

X	Drywall

(7) Excavation

Basement: 0 S.F.
Crawl: 0 S.F.
Slab: 0 S.F.
Height to Joists: 0.0

(8) Basement

	Conc. Block
	Poured Conc.
	Stone
	Treated Wood
	Concrete Floor

(9) Basement Finish

	Recreation SF
	Living SF
	Walkout Doors (B)
	No Floor SF
	Walkout Doors (A)

(10) Floor Support

Joists:
Unsupported Len:
Cntr.Sup:

(11) Heating/Cooling

X	Gas		Oil		Elec.
	Wood		Coal		Steam

	Forced Air w/o Ducts
X	Forced Air w/ Ducts
	Forced Hot Water
	Electric Baseboard
	Elec. Ceil. Radiant
	Radiant (in-floor)
	Electric Wall Heat
	Space Heater
	Wall/Floor Furnace
	Forced Heat & Cool
	Heat Pump
	No Heating/Cooling

	Central Air
	Wood Furnace

(12) Electric

150	Amps Service

No./Qual. of Fixtures

	Ex.	X	Ord.		Min

No. of Elec. Outlets

	Many	X	Ave.		Few

(13) Plumbing

1	Average Fixture(s)
	3 Fixture Bath
	2 Fixture Bath
	Softener, Auto
	Softener, Manual
	Solar Water Heat
	No Plumbing
	Extra Toilet
	Extra Sink
	Separate Shower
	Ceramic Tile Floor
	Ceramic Tile Wains
	Ceramic Tub Alcove
	Vent Fan

(14) Water/Sewer

	Public Water
	Public Sewer
	Water Well
	1000 Gal Septic
	2000 Gal Septic

Lump Sum Items:
144

(15) Built-ins

	Appliance Allow.
	Cook Top
	Dishwasher
	Garbage Disposal
	Bath Heater
	Vent Fan
	Hot Tub
	Unvented Hood
	Vented Hood
	Intercom
	Jacuzzi Tub
	Jacuzzi repl.Tub
	Oven
	Microwave
	Standard Range
	Self Clean Range
	Sauna
	Trash Compactor
	Central Vacuum
	Security System

(15) Fireplaces

	Interior 1 Story
	Interior 2 Story
	2nd/Same Stack
	Two Sided
	Exterior 1 Story
	Exterior 2 Story
	Prefab 1 Story
	Prefab 2 Story
	Heat Circulator
	Raised Hearth
	Wood Stove
	Direct-Vented Gas

Class: CD
Effec. Age: 59
Floor Area: 0
Total Base New : 3,751 E.C.F.
Total Depr Cost: 1,704 X 1.297
Estimated T.C.V: 2,210

(16) Porches/Decks

Area	Type

(17) Garage

Year Built:
Car Capacity:
Class:
Exterior:
Brick Ven.:
Stone Ven.:
Common Wall:
Foundation:
Finished ?:
Auto. Doors:
Mech. Doors:
Area:
% Good:
Storage Area:
No Conc. Floor:

Bsmnt Garage:

Carport Area:
Roof:

Cost Est. for Res. Bldg: 1 Single Family PLAIN Cls CD Blt 0
(11) Heating System: Forced Air w/ Ducts
Ground Area = 0 SF Floor Area = 0 SF.
Phy/Ab.Phy/Func/Econ/Comb. % Good=45/100/100/100/45
Building Areas

Stories	Exterior	Foundation	Size	Cost New	Depr. Cost	
Other Additions/Adjustments						
Local Cost Items						
SHED			204	1,591	732	*4
Lump Sum Items						
OLD TRAVEL TRL				2,160	972	
			Totals:	3,751	1,704	

Notes:
ECF (RESIDENTIAL) 1.297 => TCV: 2,210

*** Information herein deemed reliable but not guaranteed***

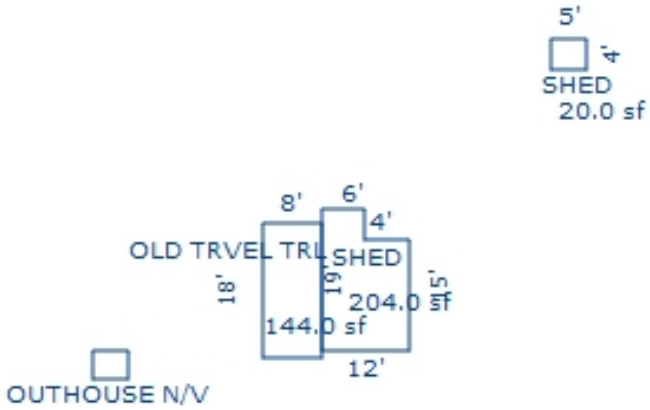

Sketch by Apex Sketch

*** Information herein deemed reliable but not guaranteed***

Parcel Number: 2410-30-3401-01 Jurisdiction: GREENWOOD TWP County: WEXFORD Printed on 02/15/2024

Grantor	Grantee	Sale Price	Sale Date	Inst. Type	Terms of Sale	Liber & Page	Verified By	Prcnt. Trans.
UNDERWOOD, WILLIAM J	UNDERWOOD, WILLIAM J & LYN	0	10/19/2020	QC	21-NOT USED/OTHER	688/1687	AGENT	0.0
MILES, RANDY D	UNDERWOOD, WILLIAM J	335,000	10/09/2020	WD	03-ARM'S LENGTH	688/1179	AGENT	100.0
LEHR, HOWARD & JOYCE	MILES, RANDY & MELISSA	30,000	11/20/2003	WD	03-ARM'S LENGTH	525:470	DEED	0.0

Property Address

7243 N 27 RD

Owner's Name/Address

UNDERWOOD, WILLIAM J & LYNNE M
7243 N 27 RD
MANTON MI 49663

Tax Description

E 1/2 OF SW 1/4 OF SW 1/4 AND N 200 FT OF SE 1/4 OF SW 1/4 LYING W'LY OF C/L 27RD 25.26 A M/L GW. SEC. 30 T24N R10W
-MANTON-
COMBINED ON 12/02/2016 FROM 2410-30-3401, 2410-30-3302;

Comments/Influences

Split/Comb. on 01/23/2017 completed 01/23/2017 JAY ;
Parent Parcel(s): 2410-30-3401, 2410-30-3302;
Child Parcel(s): 2410-30-3401-01;

The Equalizer. Copyright (c) 1999 - 2009.
Licensed To: Township of Greenwood, County of Wexford, Michigan

Class: RESIDENTIAL-IMPROV Zoning:
School: MANTON CONSOLIDATED SCHOOLS
P.R.E. 100% 10/22/2020
:
2024 Est TCV 365,192 TCV/TFA: 305.86

Building Permit(s)	Date	Number	Status
Pole Barn	08/22/2016	PB16-0163	COMPLETE
Res. New Construction	09/20/2011	PE11-19193	
Res. New Construction	09/20/2011	PM11-11541	
Res. New Construction	09/20/2011	PP11-5120	

X Improved | Vacant

Public Improvements

- Dirt Road
- Gravel Road
- Paved Road
- Storm Sewer
- Sidewalk
- Water
- Sewer
- Electric
- Gas
- Curb
- Street Lights
- Standard Utilities
- Underground Utils.

Topography of Site

- Level
- Rolling
- Low
- High
- Landscaped
- Swamp
- Wooded
- Pond
- Waterfront
- Ravine
- Wetland
- Flood Plain

Who	When	What
GLA	07/10/2019	INSPECTION
GLA	07/10/2019	INSPECTION

Land Value Estimates for Land Table 4010.LAND VALUES

Description	Frontage	Depth	* Factors * Front	Depth	Rate	%Adj.	Reason	Value
	200.00	0.00	1.0000	1.0000	0	100		0
ACREAGE			25.108 Acres		2,722	100		68,344
			0.152 Acres		0	100		0
200 Actual Front Feet, 25.26 Total Acres							Total Est. Land Value =	68,344

Land Improvement Cost Estimates

Description	Rate	Size	% Good	Cash Value
D/W/P: Asphalt Paving	2.91	2190	70	4,461
D/W/P: 4in Concrete	6.53	1920	76	9,529
Wood Frame	20.22	508	87	8,937
Total Estimated Land Improvements True Cash Value =				22,927

Year	Land Value	Building Value	Assessed Value	Board of Review	Tribunal/ Other	Taxable Value
2024	34,200	148,400	182,600			145,640C
2023	31,400	122,300	153,700			138,705C
2022	28,400	103,700	132,100			132,100S
2021	25,800	104,100	129,900			129,900S

*** Information herein deemed reliable but not guaranteed***

Building Type

X	Single Family
	Mobile Home
	Town Home
	Duplex
	A-Frame
X	Wood Frame

Building Style: PLAIN

Yr Built	Remodeled
2010	0

Condition: Good

Room List

	Basement
	1st Floor
	2nd Floor
	Bedrooms

(1) Exterior

X	Wood/Shingle
	Aluminum/Vinyl
	Brick
X	Insulation

(2) Windows

X	Many		Large
	Avg.	X	Avg.
	Few		Small

	Wood Sash
	Metal Sash
X	Vinyl Sash
	Double Hung
	Horiz. Slide
	Casement
	Double Glass
	Patio Doors
X	Storms & Screens

(3) Roof

X	Gable		Gambrel
	Hip		Mansard
	Flat		Shed
X	Asphalt Shingle		

Chimney:

(3) Roof (cont.)

	Eavestrough
X	Insulation
0	Front Overhang
0	Other Overhang

(4) Interior

X	Drywall		Plaster
	Paneled		Wood T&G

Trim & Decoration

	Ex	X	Ord		Min

Size of Closets

	Lg	X	Ord		Small

Doors:		Solid	X	H.C.	

(5) Floors

Kitchen:
Other: Linoleum
Other: Carpeted

(6) Ceilings

X	Drywall		

(7) Excavation

Basement: 0 S.F.
Crawl: 1194 S.F.
Slab: 0 S.F.
Height to Joists: 0.0

(8) Basement

	Conc. Block
	Poured Conc.
	Stone
	Treated Wood
	Concrete Floor

(9) Basement Finish

	Recreation SF
	Living SF
	Walkout Doors (B)
	No Floor SF
	Walkout Doors (A)

(10) Floor Support

Joists:
Unsupported Len:
Cntr.Sup:

(11) Heating/Cooling

X	Gas		Oil		Elec.
	Wood		Coal		Steam

	Forced Air w/o Ducts
X	Forced Air w/ Ducts
	Forced Hot Water
	Electric Baseboard
	Elec. Ceil. Radiant
	Radiant (in-floor)
	Electric Wall Heat
	Space Heater
	Wall/Floor Furnace
	Forced Heat & Cool
	Heat Pump
	No Heating/Cooling
	Central Air
	Wood Furnace

(12) Electric

150	Amps Service

No./Qual. of Fixtures

	Ex.	X	Ord.		Min

No. of Elec. Outlets

	Many	X	Ave.		Few

(13) Plumbing

	Average Fixture(s)
2	3 Fixture Bath
	2 Fixture Bath
	Softener, Auto
	Softener, Manual
	Solar Water Heat
	No Plumbing
	Extra Toilet
	Extra Sink
	Separate Shower
	Ceramic Tile Floor
	Ceramic Tile Wains
	Ceramic Tub Alcove
	Vent Fan

(14) Water/Sewer

	Public Water
	Public Sewer
1	Water Well
1	1000 Gal Septic
	2000 Gal Septic

Lump Sum Items:

(15) Built-ins

	Appliance Allow.
	Cook Top
	Dishwasher
	Garbage Disposal
	Bath Heater
	Vent Fan
	Hot Tub
	Unvented Hood
	Vented Hood
	Intercom
	Jacuzzi Tub
	Jacuzzi repl.Tub
	Oven
	Microwave
	Standard Range
	Self Clean Range
	Sauna
	Trash Compactor
	Central Vacuum
	Security System

(15) Fireplaces

	Interior 1 Story
	Interior 2 Story
	2nd/Same Stack
	Two Sided
	Exterior 1 Story
	Exterior 2 Story
	Prefab 1 Story
	Prefab 2 Story
	Heat Circulator
	Raised Hearth
	Wood Stove
	Direct-Vented Gas

Class: CD
Effec. Age: 14
Floor Area: 1,194
Total Base New : 245,576 E.C.F.
Total Depr Cost: 211,196 X 1.297
Estimated T.C.V: 273,921

(16) Porches/Decks

Area	Type
360	CSEP (2 Story)
196	WGEP (1 Story)
144	Brzwy, FW

(17) Garage

Year Built: 2013
Car Capacity:
Class: CD
Exterior: Siding
Brick Ven.: 0
Stone Ven.: 0
Common Wall: Detache
Foundation: 42 Inch
Finished ?:
Auto. Doors: 0
Mech. Doors: 0
Area: 952
% Good: 0
Storage Area: 0
No Conc. Floor: 0

Bsmnt Garage:

Carport Area:
Roof:

Cost Est. for Res. Bldg: 1 Single Family PLAIN Cls CD Blt 2010
(11) Heating System: Forced Air w/ Ducts
Ground Area = 1194 SF Floor Area = 1194 SF.
Phy/Ab.Phy/Func/Econ/Comb. % Good=86/100/100/100/86
Building Areas

Stories	Exterior	Foundation	Size	Cost New	Depr. Cost
1 Story	Siding	Crawl Space	1,194		
			Total:	138,473	119,087
Other Additions/Adjustments					
Plumbing					
3 Fixture Bath			1	3,887	3,343
Water/Sewer					
1000 Gal Septic			1	4,582	3,941
Water Well, 100 Feet			1	5,680	4,885
Porches					
CSEP (2 Story)			360	19,861	17,080
WGEP (1 Story)			196	13,693	11,776
Garages					
Class: CD Exterior: Siding Foundation: 42 Inch (Unfinished)					
Base Cost			952	32,311	27,787
Class: CD Exterior: Pole (Unfinished)					
Base Cost			768	18,394	15,819
Breezeways					
Frame Wall			144	8,695	7,478
			Totals:	245,576	211,196

Notes:

ECF (RESIDENTIAL) 1.297 => TCV: 273,921

*** Information herein deemed reliable but not guaranteed***

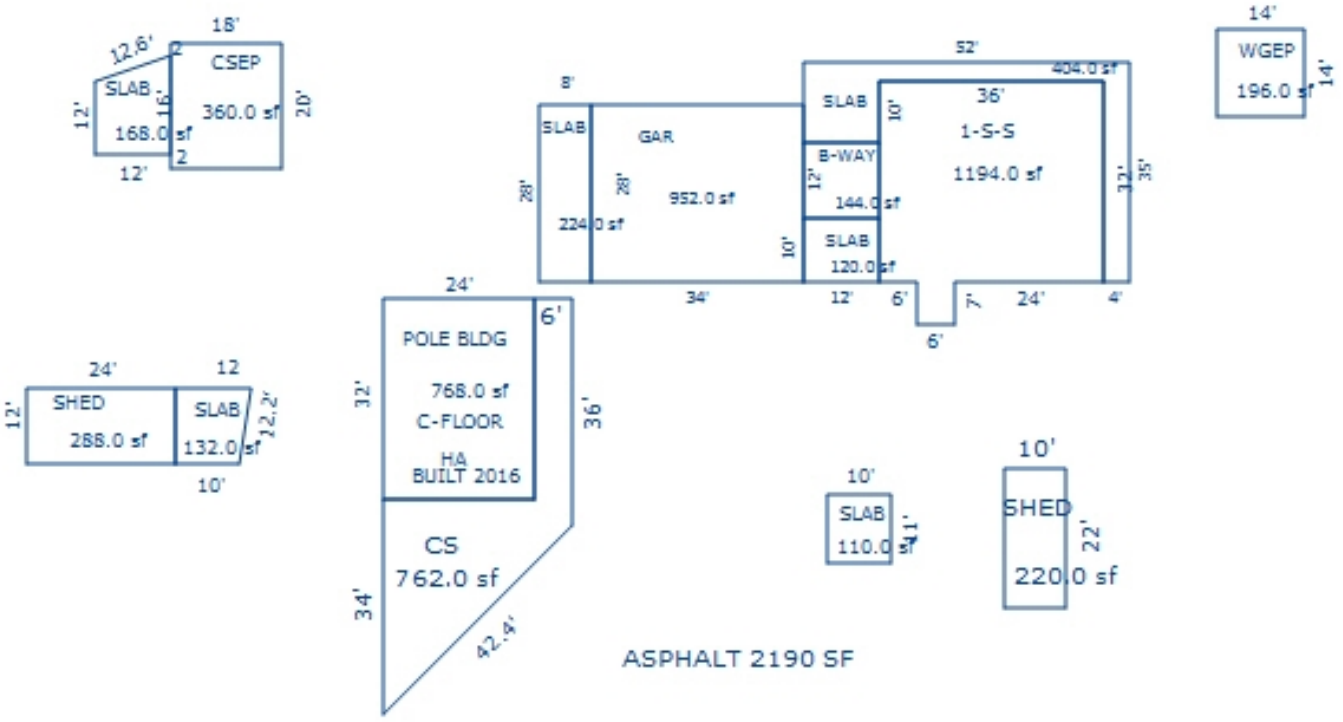

Sketch by Apex Sketch

*** Information herein deemed reliable but not guaranteed***

Parcel Number: 2410-30-3402 Jurisdiction: GREENWOOD TWP County: WEXFORD Printed on 02/15/2024

Grantor	Grantee	Sale Price	Sale Date	Inst. Type	Terms of Sale	Liber & Page	Verified By	Prcnt. Trans.

Property Address

Owner's Name/Address

CALDWELL, SHARON
22336 LEROY
LEROY MI 49655

Tax Description

S 200 FT OF N 400 FT OF SE 1/4 OF SW 1/4 --6.05 A M/L-- GW. SEC. 30 T24N R10W -MANTON-

Comments/Influences

The Equalizer. Copyright (c) 1999 - 2009. Licensed To: Township of Greenwood, County of Wexford, Michigan

Class: RESIDENTIAL-IMPROV Zoning:

School: MANTON CONSOLIDATED SCHOOLS

P.R.E. 0%

:

2024 Est TCV 33,698 TCV/TFA: 0.00

	Building Permit(s)	Date	Number	Status

X Improved | Vacant

	Public Improvements
	Dirt Road
X	Gravel Road
	Paved Road
	Storm Sewer
	Sidewalk
	Water
	Sewer
X	Electric
	Gas
	Curb
	Street Lights
	Standard Utilities
	Underground Utils.

	Topography of Site
	Level
X	Rolling
	Low
	High
	Landscaped
	Swamp
X	Wooded
	Pond
	Waterfront
	Ravine
	Wetland
	Flood Plain
X	OPEN/PINES

Who	When	What
GLA	07/10/2019	INSPECTION
GLA	07/10/2019	INSPECTION

Land Value Estimates for Land Table 4010.LAND VALUES

Description	Frontage	Depth	* Factors * Front	Depth	Rate	%Adj.	Reason	Value
	200.00	0.00	1.0000	1.0000	0	100		0
ACREAGE			5.898 Acres		5,112	100		30,151
			0.152 Acres		0	100		0
200 Actual Front Feet, 6.05 Total Acres							Total Est. Land Value =	30,151

Land Improvement Cost Estimates

Description	Rate	Size	% Good	Cash Value
D/W/P: 4in Concrete	7.01	40	96	269
Total Estimated Land Improvements True Cash Value =				269

Year	Land Value	Building Value	Assessed Value	Board of Review	Tribunal/ Other	Taxable Value
2024	15,100	1,700	16,800			8,530C
2023	11,300	1,500	12,800			8,124C
2022	9,600	1,500	11,100			7,738C
2021	10,800	1,500	12,300			7,491C

*** Information herein deemed reliable but not guaranteed***

Building Type

X	Single Family
	Mobile Home
	Town Home
	Duplex
	A-Frame
X	Wood Frame

Building Style: PLAIN

Yr Built	Remodeled
0	0

Condition: Good

Room List

	Basement
	1st Floor
	2nd Floor
	Bedrooms

(1) Exterior

X	Wood/Shingle
	Aluminum/Vinyl
	Brick
X	Insulation

(2) Windows

X	Many		Large
	Avg.	X	Avg.
	Few		Small

	Wood Sash
	Metal Sash
X	Vinyl Sash
	Double Hung
	Horiz. Slide
	Casement
	Double Glass
	Patio Doors
X	Storms & Screens

(3) Roof

X	Gable		Gambrel
	Hip		Mansard
	Flat		Shed

X	Asphalt Shingle

Chimney:

(3) Roof (cont.)

	Eavestrough
X	Insulation
0	Front Overhang
0	Other Overhang

(4) Interior

X	Drywall		Plaster
	Paneled		Wood T&G

Trim & Decoration

	Ex	X	Ord		Min

Size of Closets

	Lg	X	Ord		Small

Doors:		Solid	X	H.C.	

(5) Floors

Kitchen:
Other: Linoleum
Other: Carpeted

(6) Ceilings

X	Drywall

(7) Excavation

Basement: 0 S.F.
Crawl: 0 S.F.
Slab: 0 S.F.
Height to Joists: 0.0

(8) Basement

	Conc. Block
	Poured Conc.
	Stone
	Treated Wood
	Concrete Floor

(9) Basement Finish

	Recreation SF
	Living SF
	Walkout Doors (B)
	No Floor SF
	Walkout Doors (A)

(10) Floor Support

Joists:
Unsupported Len:
Cntr.Sup:

(11) Heating/Cooling

X	Gas		Oil		Elec.
	Wood		Coal		Steam

	Forced Air w/o Ducts
X	Forced Air w/ Ducts
	Forced Hot Water
	Electric Baseboard
	Elec. Ceil. Radiant
	Radiant (in-floor)
	Electric Wall Heat
	Space Heater
	Wall/Floor Furnace
	Forced Heat & Cool
	Heat Pump
	No Heating/Cooling

	Central Air
	Wood Furnace

(12) Electric

150	Amps Service

No./Qual. of Fixtures

	Ex.	X	Ord.		Min

No. of Elec. Outlets

	Many	X	Ave.		Few

(13) Plumbing

1	Average Fixture(s)
	3 Fixture Bath
	2 Fixture Bath
	Softener, Auto
	Softener, Manual
	Solar Water Heat
	No Plumbing
	Extra Toilet
	Extra Sink
	Separate Shower
	Ceramic Tile Floor
	Ceramic Tile Wains
	Ceramic Tub Alcove
	Vent Fan

(14) Water/Sewer

	Public Water
	Public Sewer
	Water Well
	1000 Gal Septic
	2000 Gal Septic

Lump Sum Items:
160

(15) Built-ins

	Appliance Allow.
	Cook Top
	Dishwasher
	Garbage Disposal
	Bath Heater
	Vent Fan
	Hot Tub
	Unvented Hood
	Vented Hood
	Intercom
	Jacuzzi Tub
	Jacuzzi repl.Tub
	Oven
	Microwave
	Standard Range
	Self Clean Range
	Sauna
	Trash Compactor
	Central Vacuum
	Security System

(15) Fireplaces

	Interior 1 Story
	Interior 2 Story
	2nd/Same Stack
	Two Sided
	Exterior 1 Story
	Exterior 2 Story
	Prefab 1 Story
	Prefab 2 Story
	Heat Circulator
	Raised Hearth
	Wood Stove
	Direct-Vented Gas

Class: CD
Effec. Age: 59
Floor Area: 0
Total Base New : 8,640 E.C.F.
Total Depr Cost: 2,527 X 1.297
Estimated T.C.V: 3,278

(16) Porches/Decks

Area	Type

(17) Garage

Year Built:
Car Capacity:
Class:
Exterior:
Brick Ven.:
Stone Ven.:
Common Wall:
Foundation:
Finished ?:
Auto. Doors:
Mech. Doors:
Area:
% Good:
Storage Area:
No Conc. Floor:

Bsmnt Garage:

Carport Area:
Roof:

Cost Est. for Res. Bldg: 1 Single Family PLAIN Cls CD Blt 0
(11) Heating System: Forced Air w/ Ducts
Ground Area = 0 SF Floor Area = 0 SF.
Phy/Ab.Phy/Func/Econ/Comb. % Good=45/100/65/100/29.25
Building Areas

Stories	Exterior	Foundation	Size	Cost New	Depr. Cost
Other Additions/Adjustments					
Lump Sum Items					
CABIN				8,640	2,527
			Totals:	8,640	2,527

Notes:
ECF (RESIDENTIAL) 1.297 => TCV: 3,278

*** Information herein deemed reliable but not guaranteed***

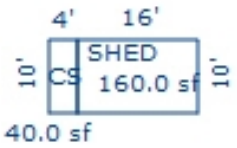

Sketch by Apex Sketch

*** Information herein deemed reliable but not guaranteed***

Parcel Number: 2410-30-3403-01 Jurisdiction: GREENWOOD TWP County: WEXFORD Printed on 02/15/2024

Grantor	Grantee	Sale Price	Sale Date	Inst. Type	Terms of Sale	Liber & Page	Verified By	Prcnt. Trans.
GRIFFIS, KENNETH TRUST		0	03/08/2019	WD	14-INTO/OUT OF TRUST	685 /2429	DEED	0.0
GRIFFIS, KENNETH & SALLY T	DITTENBER ADAM & JAMIE	35,000	04/22/2017	MLC	03-ARM'S LENGTH	6803/24	DEED	100.0

Property Address

7153 N 27 RD

Owner's Name/Address

DITTENBER ADAM & JAMIE
194 STEVE SENIC DR
HORTON MI 49246

Class: RESIDENTIAL-IMPROV Zoning:

School: MANTON CONSOLIDATED SCHOOLS

P.R.E. 0%

:

2024 Est TCV 56,920 TCV/TFA: 142.30

Building Permit(s)	Date	Number	Status

X Improved | Vacant

Tax Description

PARCEL B: PT OF SE 1/4 OF SW 1/4 DESC AS COM AT S 1/4 COR OF SD SEC; N 655.27 FT TO POB; N 250.77 FT; W 178.74 FT TO C/L OF STREAM; S07*48'47"W ALG SD C/L OF STREAM 132.38 FT; S48*35'24"E 43.70 FT; SL2*08'39"E 42.89 FT; S80*11'57"W 77.98 FT; SL2*59'43"W 35.28 FT; E 230.46 FT TO POB & PT OF SW 1/4 OF SE 1/4 DESC AS BEG AT S 1/4 COR OF SD SEC; N 867.69 FT TO POB; N 107.33

The Equalizer. Copyright (c) 1999 - 2009.
Licensed To: Township of Greenwood, County of Wexford, Michigan

Public Improvements

- Dirt Road
- Gravel Road
- Paved Road
- Storm Sewer
- Sidewalk
- Water
- Sewer
- Electric
- Gas
- Curb
- Street Lights
- Standard Utilities
- Underground Utils.

Topography of Site

- Level
- Rolling
- Low
- High
- Landscaped
- Swamp
- Wooded
- Pond
- Waterfront
- Ravine
- Wetland
- Flood Plain

Who	When	What
GLA	07/10/2019	INSPECTION
GLA	07/10/2019	INSPECTION

Land Value Estimates for Land Table 4010.LAND VALUES

Description	Frontage	Depth	* Factors * Front	Depth	Rate	%Adj.	Reason	Value
	230.00	35.00	1.0000	0.0000	0	100*		0
ACREAGE			1.120	Acres	10,953	100		12,267

* denotes lines that do not contribute to the total acreage calculation.

230 Actual Front Feet, 1.12 Total Acres Total Est. Land Value = 12,267

Year	Land Value	Building Value	Assessed Value	Board of Review	Tribunal/ Other	Taxable Value
2024	6,100	22,400	28,500			20,165C
2023	3,200	18,300	21,500			19,110C
2022	2,700	15,500	18,200			18,200S
2021	3,200	15,800	19,000			18,860C

*** Information herein deemed reliable but not guaranteed***

Building Type

X	Single Family
	Mobile Home
	Town Home
	Duplex
	A-Frame
X	Wood Frame

Building Style: PLAIN

Yr Built	Remodeled
0	1975

Condition: Good

Room List

	Basement
	1st Floor
	2nd Floor
	Bedrooms

(1) Exterior

X	Wood/Shingle
	Aluminum/Vinyl
	Brick
X	Insulation

(2) Windows

	Many		Large
X	Avg.	X	Avg.
	Few		Small

X	Wood Sash
	Metal Sash
	Vinyl Sash
	Double Hung
	Horiz. Slide
	Casement
	Double Glass
	Patio Doors
X	Storms & Screens

(3) Roof

X	Gable		Gambrel
	Hip		Mansard
	Flat		Shed

X	Asphalt Shingle

Chimney:

(3) Roof (cont.)

	Eavestrough
X	Insulation
0	Front Overhang
0	Other Overhang

(4) Interior

X	Drywall		Plaster
	Paneled		Wood T&G

Trim & Decoration

	Ex	X	Ord		Min

Size of Closets

	Lg	X	Ord		Small

Doors:		Solid	X	H.C.	

(5) Floors

Kitchen:
Other: Linoleum
Other: Carpeted

(6) Ceilings

X	Drywall

(7) Excavation

Basement: 0 S.F.
Crawl: 400 S.F.
Slab: 0 S.F.
Height to Joists: 0.0

(8) Basement

	Conc. Block
	Poured Conc.
	Stone
	Treated Wood
	Concrete Floor

(9) Basement Finish

	Recreation SF
	Living SF
	Walkout Doors (B)
	No Floor SF
	Walkout Doors (A)

(10) Floor Support

Joists:
Unsupported Len:
Cntr.Sup:

(11) Heating/Cooling

X	Gas		Oil		Elec.
	Wood		Coal		Steam

	Forced Air w/o Ducts
X	Forced Air w/ Ducts
	Forced Hot Water
	Electric Baseboard
	Elec. Ceil. Radiant
	Radiant (in-floor)
	Electric Wall Heat
	Space Heater
	Wall/Floor Furnace
	Forced Heat & Cool
	Heat Pump
	No Heating/Cooling

	Central Air
	Wood Furnace

(12) Electric

150	Amps Service

No./Qual. of Fixtures

	Ex.	X	Ord.		Min

No. of Elec. Outlets

	Many	X	Ave.		Few

(13) Plumbing

1	Average Fixture(s)
	3 Fixture Bath
	2 Fixture Bath
	Softener, Auto
	Softener, Manual
	Solar Water Heat
	No Plumbing
	Extra Toilet
	Extra Sink
	Separate Shower
	Ceramic Tile Floor
	Ceramic Tile Wains
	Ceramic Tub Alcove
	Vent Fan

(14) Water/Sewer

	Public Water
	Public Sewer
	Water Well
	1000 Gal Septic
	2000 Gal Septic

Lump Sum Items:

(15) Built-ins

	Appliance Allow.
	Cook Top
	Dishwasher
	Garbage Disposal
	Bath Heater
	Vent Fan
	Hot Tub
	Unvented Hood
	Vented Hood
	Intercom
	Jacuzzi Tub
	Jacuzzi repl.Tub
	Oven
	Microwave
	Standard Range
	Self Clean Range
	Sauna
	Trash Compactor
	Central Vacuum
	Security System

(15) Fireplaces

	Interior 1 Story
	Interior 2 Story
	2nd/Same Stack
	Two Sided
1	Exterior 1 Story
	Exterior 2 Story
	Prefab 1 Story
	Prefab 2 Story
	Heat Circulator
	Raised Hearth
	Wood Stove
	Direct-Vented Gas

Class: D
Effec. Age: 48
Floor Area: 400
Total Base New : 66,259 E.C.F.
Total Depr Cost: 34,428 X 1.297
Estimated T.C.V: 44,653

(16) Porches/Decks

Area	Type
168	WSEP (1 Story)
18	4in Concrete
84	Treated Wood

(17) Garage

Year Built:
Car Capacity:
Class:
Exterior:
Brick Ven.:
Stone Ven.:
Common Wall:
Foundation:
Finished ?:
Auto. Doors:
Mech. Doors:
Area:
% Good:
Storage Area:
No Conc. Floor:

Bsmnt Garage:

Carport Area:
Roof:

Cost Est. for Res. Bldg: 1 Single Family PLAIN Cls D Blt 0
(11) Heating System: Forced Air w/ Ducts
Ground Area = 400 SF Floor Area = 400 SF.
Phy/Ab.Phy/Func/Econ/Comb. % Good=52/100/100/100/52
Building Areas

Stories	Exterior	Foundation	Size	Cost New	Depr. Cost	
1 Story	Siding	Crawl Space	400			
		Total:		51,245	26,647	
Other Additions/Adjustments						
Porches						
WSEP (1 Story)			168	7,211	3,750	
4in Concrete			18	120	62	
Deck						
Treated Wood			84	2,242	1,166	
Fireplaces						
Exterior 1 Story			1	5,004	2,602	
Local Cost Items						
SHED			56	437	201	*4
		Totals:		66,259	34,428	

Notes:
ECF (RESIDENTIAL) 1.297 => TCV: 44,653

*** Information herein deemed reliable but not guaranteed***

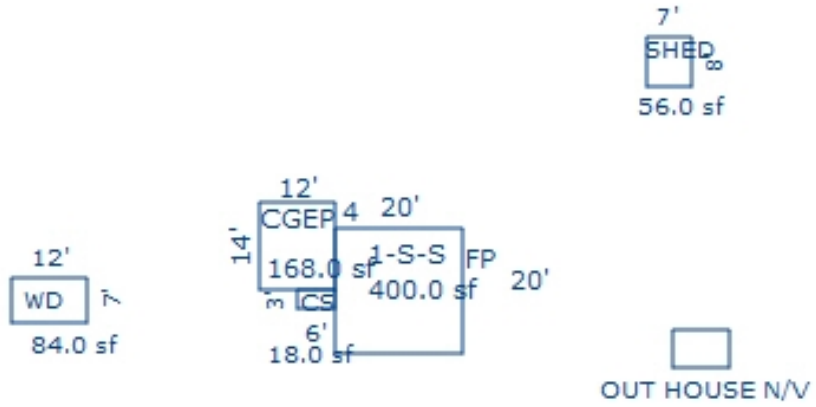

Sketch by Apex Sketch

*** Information herein deemed reliable but not guaranteed***

Parcel Number: 2410-30-3403-02 Jurisdiction: GREENWOOD TWP County: WEXFORD Printed on 02/15/2024

Grantor	Grantee	Sale Price	Sale Date	Inst. Type	Terms of Sale	Liber & Page	Verified By	Prcnt. Trans.
GRIFFIS, KENNETH R.	GRIFFIS, RICHARD R	0	03/08/2019	WD	20-MULTI PARCEL SALE REF	6851/673	DEED	0.0

Property Address

7153 N 27 RD

Owner's Name/Address

GRIFFIS, RICHARD R
822 N MAGNOLIA AVE
LANSING MI 48912

Tax Description

S 250 FT OF N 650 FT OF SE 1/4 OF SW 1/4 EXC THAT PT W OF STREAM -6.49 A M/L- GW. SEC. 30 T24N RLOW -MANTON- SPLIT ON 12-11-2017 FROM 2410-36-3403

Comments/Influences

Split/Comb. on 01/05/2018 completed 01/05/2018 JAY ;
Parent Parcel(s): 2410-30-3403;
Child Parcel(s): 2410-30-3403-01, 2410-30-3403-02;

Class: RESIDENTIAL-VACANT Zoning:
School: MANTON CONSOLIDATED SCHOOLS
P.R.E. 0%
:
2024 Est TCV 33,177

Building Permit(s)	Date	Number	Status

Improved | X | Vacant

Public Improvements

Dirt Road
Gravel Road
Paved Road
Storm Sewer
Sidewalk
Water
Sewer
Electric
Gas
Curb
Street Lights
Standard Utilities
Underground Utils.

Topography of Site

Level
Rolling
Low
High
Landscaped
Swamp
Wooded
Pond
Waterfront
Ravine
Wetland
Flood Plain

Who When What
GLA 07/10/2019 INSPECTION
GLA 07/10/2019 INSPECTION

Land Value Estimates for Land Table 4010.LAND VALUES

Description	Frontage	Depth	* Factors * Front	Depth	Rate	%Adj.	Reason	Value
	249.12	508.76	1.0000	0.0000	0	100*		0
ACREAGE			6.490 Acres		5,112	100		33,177

* denotes lines that do not contribute to the total acreage calculation.
249 Actual Front Feet, 6.49 Total Acres Total Est. Land Value = 33,177

Year	Land Value	Building Value	Assessed Value	Board of Review	Tribunal/ Other	Taxable Value
2024	16,600	0	16,600			9,646C
2023	11,600	0	11,600			9,187C
2022	9,700	0	9,700			8,750C
2021	11,000	0	11,000			8,471C

The Equalizer. Copyright (c) 1999 - 2009.
Licensed To: Township of Greenwood, County of Wexford, Michigan

*** Information herein deemed reliable but not guaranteed***

Parcel Number: 2410-30-3404 Jurisdiction: GREENWOOD TWP County: WEXFORD Printed on 02/15/2024

Grantor	Grantee	Sale Price	Sale Date	Inst. Type	Terms of Sale	Liber & Page	Verified By	Prcnt. Trans.
GRIFFIS, KENNETH R.	GRIFFIS, RICHARD R	0	03/08/2019	WD	20-MULTI PARCEL SALE REF	6851/673	DEED	0.0
GRIFFIS, RICHARD R		0	03/08/2019	WD	14-INTO/OUT OF TRUST	685 /1673	DEED	0.0

Property Address

7101 N 27 RD

Owner's Name/Address

GRIFFIS, RICHARD R
822 N MAGNOLIA AVE
LANSING MI 48912

Tax Description

SE 1/4 OF SW 1/4 EXC N 650 FT THEREOF-19.71 A M/L-- GW. SEC. 30 T24N R10W -MANTON-

Comments/Influences

Split/Comb. on 05/01/2017 completed 05/01/2017 MOLLY ;
Parent Parcel(s): 2410-30-3403, 2410-30-3404;
Child Parcel(s): 2410-30-3404-01, 2410-30-3401-02;

The Equalizer. Copyright (c) 1999 - 2009.
Licensed To: Township of Greenwood, County of Wexford, Michigan

Class: RESIDENTIAL-VACANT Zoning:
School: MANTON CONSOLIDATED SCHOOLS
P.R.E. 0%
:
2024 Est TCV 186,253 TCV/TFA: 264.56

Building Permit(s)	Date	Number	Status
RESIDENTIAL - NEW	08/31/2021	PB21-0214	ENTERED
Res. New Construction	05/12/2021	PB20-21059	ENTERED

X Improved | Vacant

	Public Improvements
X	Dirt Road
X	Gravel Road
	Paved Road
	Storm Sewer
	Sidewalk
	Water
	Sewer
X	Electric
	Gas
	Curb
	Street Lights
	Standard Utilities
	Underground Utils.

	Topography of Site
	Level
X	Rolling
X	Low
	High
	Landscaped
X	Swamp
X	Wooded
	Pond
	Waterfront
	Ravine
	Wetland
	Flood Plain
X	OPEN/PINES

Who	When	What
DB	10/23/2023	INSPECTION
GLA	11/01/2021	INSPECTION
GLA	07/10/2019	INSPECTION

Land Value Estimates for Land Table 4010.LAND VALUES

Description	Frontage	Depth	* Factors * Front	Depth	Rate	%Adj.	Reason	Value
	600.00	0.00	1.0000	1.0000	0	100		0
ACREAGE			19.710	Acres	3,200	100		63,072
600 Actual Front Feet, 19.71 Total Acres							Total Est. Land Value =	63,072

Land Improvement Cost Estimates

Description	Rate	Size	% Good	Cash Value
D/W/P: 3.5 Concrete	5.82	442	97	2,495
Total Estimated Land Improvements True Cash Value =				2,495

Year	Land Value	Building Value	Assessed Value	Board of Review	Tribunal/ Other	Taxable Value
2024	31,500	61,600	93,100			66,281C
2023	25,600	25,800	51,400			36,268C
2022	24,100	0	24,100			11,875C
2021	22,300	0	22,300			11,496C

*** Information herein deemed reliable but not guaranteed***

Building Type

X	Single Family
	Mobile Home
	Town Home
	Duplex
	A-Frame
X	Wood Frame

Building Style: POLE BARN HOUSE

Yr Built	Remodeled
0	0

Condition: Good

Room List

	Basement
	1st Floor
	2nd Floor
	Bedrooms

(1) Exterior

	Wood/Shingle
X	Aluminum/Vinyl
	Brick
X	Insulation

(2) Windows

	Many		Large
X	Avg.	X	Avg.
	Few		Small

	Wood Sash
	Metal Sash
X	Vinyl Sash
	Double Hung
	Horiz. Slide
	Casement
	Double Glass
	Patio Doors
X	Storms & Screens

(3) Roof

X	Gable		Gambrel
	Hip		Mansard
	Flat		Shed

X	Asphalt Shingle

Chimney:

(3) Roof (cont.)

	Eavestrough
X	Insulation
0	Front Overhang
0	Other Overhang

(4) Interior

X	Drywall		Plaster
	Paneled		Wood T&G

Trim & Decoration

	Ex	X	Ord		Min

Size of Closets

	Lg	X	Ord		Small

Doors:		Solid	X	H.C.	

(5) Floors

Kitchen:
Other: Linoleum
Other: Carpeted

(6) Ceilings

X	Drywall		

(7) Excavation

Basement: 0 S.F.
Crawl: 0 S.F.
Slab: 704 S.F.
Height to Joists: 0.0

(8) Basement

	Conc. Block
	Poured Conc.
	Stone
	Treated Wood
	Concrete Floor

(9) Basement Finish

	Recreation SF
	Living SF
	Walkout Doors (B)
	No Floor SF
	Walkout Doors (A)

(10) Floor Support

Joists:
Unsupported Len:
Cntr.Sup:

(11) Heating/Cooling

X	Gas		Oil		Elec.
	Wood		Coal		Steam

	Forced Air w/o Ducts
	Forced Air w/ Ducts
	Forced Hot Water
	Electric Baseboard
	Elec. Ceil. Radiant
	Radiant (in-floor)
	Electric Wall Heat
	Space Heater
	Wall/Floor Furnace
X	Forced Heat & Cool
	Heat Pump
	No Heating/Cooling

	Central Air
	Wood Furnace

(12) Electric

150	Amps Service

No./Qual. of Fixtures

	Ex.	X	Ord.		Min

No. of Elec. Outlets

	Many	X	Ave.		Few

(13) Plumbing

	Average Fixture(s)
1	3 Fixture Bath
	2 Fixture Bath
	Softener, Auto
	Softener, Manual
	Solar Water Heat
	No Plumbing
	Extra Toilet
	Extra Sink
	Separate Shower
	Ceramic Tile Floor
	Ceramic Tile Wains
	Ceramic Tub Alcove
	Vent Fan

(14) Water/Sewer

	Public Water
	Public Sewer
1	Water Well
1	1000 Gal Septic
	2000 Gal Septic

Lump Sum Items:

(15) Built-ins

	Appliance Allow.
	Cook Top
	Dishwasher
	Garbage Disposal
	Bath Heater
	Vent Fan
	Hot Tub
	Unvented Hood
	Vented Hood
	Intercom
	Jacuzzi Tub
	Jacuzzi repl.Tub
	Oven
	Microwave
	Standard Range
	Self Clean Range
	Sauna
	Trash Compactor
	Central Vacuum
	Security System

(15) Fireplaces

1	Interior 1 Story
	Interior 2 Story
	2nd/Same Stack
	Two Sided
	Exterior 1 Story
	Exterior 2 Story
	Prefab 1 Story
	Prefab 2 Story
	Heat Circulator
	Raised Hearth
	Wood Stove
	Direct-Vented Gas

Class: D
Effec. Age: 3
Floor Area: 704
Total Base New : 95,929 E.C.F.
Total Depr Cost: 93,050 X 1.297
Estimated T.C.V: 120,686

(16) Porches/Decks

Area	Type

(17) Garage

Year Built:
Car Capacity:
Class:
Exterior:
Brick Ven.:
Stone Ven.:
Common Wall:
Foundation:
Finished ?:
Auto. Doors:
Mech. Doors:
Area:
% Good:
Storage Area:
No Conc. Floor:

Bsmnt Garage:

Carport Area:
Roof:

Cost Est. for Res. Bldg: 1 Single Family POLE BARN HOUSE Cls D Blt 0
(11) Heating System: Forced Heat & Cool
Ground Area = 704 SF Floor Area = 704 SF.
Phy/Ab.Phy/Func/Econ/Comb. % Good=97/100/100/100/97
Building Areas

Stories	Exterior	Foundation	Size	Cost New	Depr. Cost
1 Story	Siding	Slab	704		
			Total:	81,932	79,473
Other Additions/Adjustments					
Water/Sewer					
1000 Gal Septic			1	4,293	4,164
Water Well, 100 Feet			1	5,545	5,379
Fireplaces					
Interior 1 Story			1	4,159	4,034
			Totals:	95,929	93,050

Notes:

ECF (RESIDENTIAL) 1.297 => TCV: 120,686

*** Information herein deemed reliable but not guaranteed***

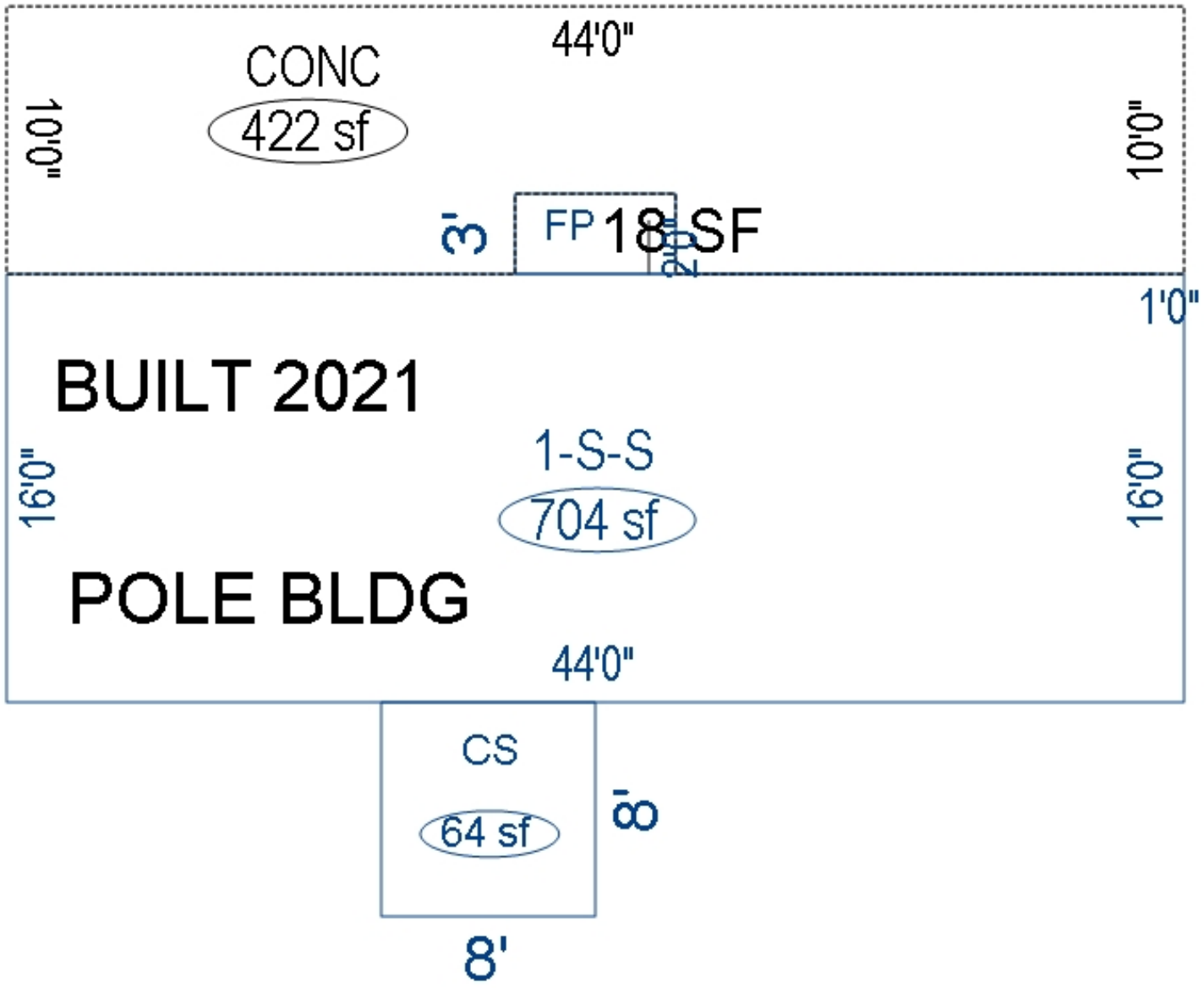

*** Information herein deemed reliable but not guaranteed***

Parcel Number: 2410-30-3405 Jurisdiction: GREENWOOD TWP County: WEXFORD Printed on 02/15/2024

Grantor	Grantee	Sale Price	Sale Date	Inst. Type	Terms of Sale	Liber & Page	Verified By	Prcnt. Trans.

Property Address	Class: RESIDENTIAL-IMPROV	Zoning:	Building Permit(s)	Date	Number	Status
7242 N 27 RD	School: MANTON CONSOLIDATED SCHOOLS		Pole Barn	09/17/2020	PB20-0173	ENTERED
	P.R.E. 100% / /		Pole Barn	06/25/2020	PB20-0072	ENTERED
Owner's Name/Address	:		RESIDENTIAL - NEW	01/03/2006	PM8863	
POWERS, MARK STEPHEN 7242 N 27 RD MANTON MI 49663	2024 Est TCV 125,684 TCV/TFA: 86.32		RESIDENTIAL - NEW	12/07/2005	PM8828	

X Improved | Vacant

Land Value Estimates for Land Table 4010.LAND VALUES

Description	Frontage	Depth	* Factors * Front	Depth	Rate	%Adj.	Reason	Value
ACREAGE			0.648 Acres		10,953	100		7,098
ROW			0.152 Acres		0	100		0
			0.80 Total Acres		Total Est. Land Value =			7,098

Land Improvement Cost Estimates

Description	Rate	Size	% Good	Cash Value
Wood Frame	28.20	120	76	2,572
Total Estimated Land Improvements True Cash Value =				2,572

Public Improvements

	Dirt Road
X	Gravel Road
	Paved Road
	Storm Sewer
	Sidewalk
	Water
	Sewer
X	Electric
	Gas
	Curb
	Street Lights
	Standard Utilities
	Underground Utils.

Topography of Site

	Level
X	Rolling
	Low
	High
	Landscaped
	Swamp
	Wooded
	Pond
	Waterfront
	Ravine
	Wetland
	Flood Plain
X	PINES

Tax Description

N 200 FT OF SE 1/4 OF SW 1/4 LYING E'LY OF C/L 27 RD -.8 A M/L- GW. SEC. 30 T24N R10W -MANTON- [[ASSESSED W/ 30-3401 '05

Comments/Influences

Who	When	What
DB	10/23/2023	INSPECTION
GLA	05/13/2021	INSPECTION
GLA	07/10/2019	INSPECTION

Year	Land Value	Building Value	Assessed Value	Board of Review	Tribunal/ Other	Taxable Value
2024	3,500	59,300	62,800			40,958C
2023	1,900	49,700	51,600			39,008C
2022	1,600	43,000	44,600			37,151C
2021	1,900	38,800	40,700			35,965C

The Equalizer. Copyright (c) 1999 - 2009. Licensed To: Township of Greenwood, County of Wexford, Michigan

*** Information herein deemed reliable but not guaranteed***

Building Type

	Single Family
X	Mobile Home
	Town Home
	Duplex
	A-Frame

X	Wood Frame

Building Style: SWT/DWT

Yr Built	Remodeled
2005	0

Condition: Good

Room List

	Basement
	1st Floor
	2nd Floor
	Bedrooms

(1) Exterior

	Wood/Shingle
X	Aluminum/Vinyl
	Brick
X	Insulation

(2) Windows

	Many		Large
X	Avg.	X	Avg.
	Few		Small

	Wood Sash
	Metal Sash
X	Vinyl Sash
	Double Hung
	Horiz. Slide
	Casement
	Double Glass
	Patio Doors
X	Storms & Screens

(3) Roof

X	Gable		Gambrel
	Hip		Mansard
	Flat		Shed

X	Asphalt Shingle

Chimney:

(3) Roof (cont.)

X	Eavestrough
	Insulation
0	Front Overhang
0	Other Overhang

(4) Interior

X	Drywall		Plaster
	Paneled		Wood T&G

Trim & Decoration

	Ex	X	Ord		Min

Size of Closets

	Lg	X	Ord		Small

Doors:		Solid	X	H.C.	

(5) Floors

Kitchen:
Other: Linoleum
Other: Carpeted

(6) Ceilings

X	Drywall		

(7) Excavation

Basement: 1456 S.F.
Crawl: 0 S.F.
Slab: 0 S.F.
Height to Joists: 0.0

(8) Basement

	Conc. Block
	Poured Conc.
	Stone
	Treated Wood
	Concrete Floor

(9) Basement Finish

	Recreation SF
	Living SF
	Walkout Doors (B)
	No Floor SF
	Walkout Doors (A)

(10) Floor Support

Joists:
Unsupported Len:
Cntr.Sup:

(11) Heating/Cooling

X	Gas		Oil		Elec.
	Wood		Coal		Steam

X	Forced Warm Air
	Wall Furnace
	Warm & Cool Air
	Heat Pump

	Central Air
	Wood Furnace

(12) Electric

150	Amps Service

No./Qual. of Fixtures

	Ex.	X	Ord.		Min

No. of Elec. Outlets

	Many	X	Ave.		Few

(13) Plumbing

2	Average Fixture(s)
	3 Fixture Bath
	2 Fixture Bath
	Softener, Auto
	Softener, Manual
	Solar Water Heat
	No Plumbing
	Extra Toilet
	Extra Sink
	Separate Shower
	Ceramic Tile Floor
	Ceramic Tile Wains
	Ceramic Tub Alcove
	Vent Fan

(14) Water/Sewer

	Public Water
	Public Sewer
1	Water Well
1	1000 Gal Septic
	2000 Gal Septic

Lump Sum Items:

(15) Built-ins

	Appliance Allow.
	Cook Top
	Dishwasher
	Garbage Disposal
	Bath Heater
	Vent Fan
	Hot Tub
	Unvented Hood
	Vented Hood
	Intercom
	Jacuzzi Tub
	Jacuzzi repl.Tub
	Oven
	Microwave
	Standard Range
	Self Clean Range
	Sauna
	Trash Compactor
	Central Vacuum
	Security System

(15) Fireplaces

	Interior 1 Story
	Interior 2 Story
	2nd/Same Stack
	Two Sided
	Exterior 1 Story
	Exterior 2 Story
	Prefab 1 Story
	Prefab 2 Story
	Heat Circulator
	Raised Hearth
	Wood Stove
	Direct-Vented Gas

Class: Average
Effec. Age: 21
Floor Area:
Total Base New : 168,771 E.C.F.
Total Depr Cost: 89,448 X 1.297
Estimated T.C.V: 116,014

(16) Porches/Decks

Area	Type
9	WPP
9	WPP
64	Brzwy, FW

(17) Garage

Year Built:
Car Capacity:
Class: CD
Exterior: Pole
Brick Ven.: 0
Stone Ven.: 0
Common Wall: Detache
Foundation: 18 Inch
Finished ?:
Auto. Doors: 0
Mech. Doors: 0
Area: 1008
% Good: 0
Storage Area: 0
No Conc. Floor: 0

Bsmnt Garage:

Carport Area:
Roof:

Cost Est. for Res. Bldg: 1 Mobile Home SWT/DWT Cls Average Blt 2005
(11) Heating System: Wall Furnace
Ground Area = 1456 SF Floor Area = 1456 SF.
Phy/Ab.Phy/Func/Econ/Comb. % Good=53/100/100/100/53
Building Areas

Type	Ext. Walls	Roof/Fnd.	Size	Cost New	Depr. Cost
Main Home	Siding	Comp.Shingle	1456		
Basement	Block, 6"		1456		
			Total:	126,771	67,189
Other Additions/Adjustments					
Plumbing					
3 Fixture Bath			1	3,075	1,630
Water/Sewer					
1000 Gal Septic			1	4,899	2,596
Water Well, 100 Feet			1	5,849	3,100
Garages					
Class: CD Exterior: Pole (Unfinished)					
Base Cost			1008	22,781	12,074
Porches					
WPP			9	480	254
WPP			9	480	254
Breezeways					
Frame Wall			64	4,436	2,351
			Totals:	168,771	89,448

Notes:

ECF (RESIDENTIAL) 1.297 => TCV: 116,014

*** Information herein deemed reliable but not guaranteed***

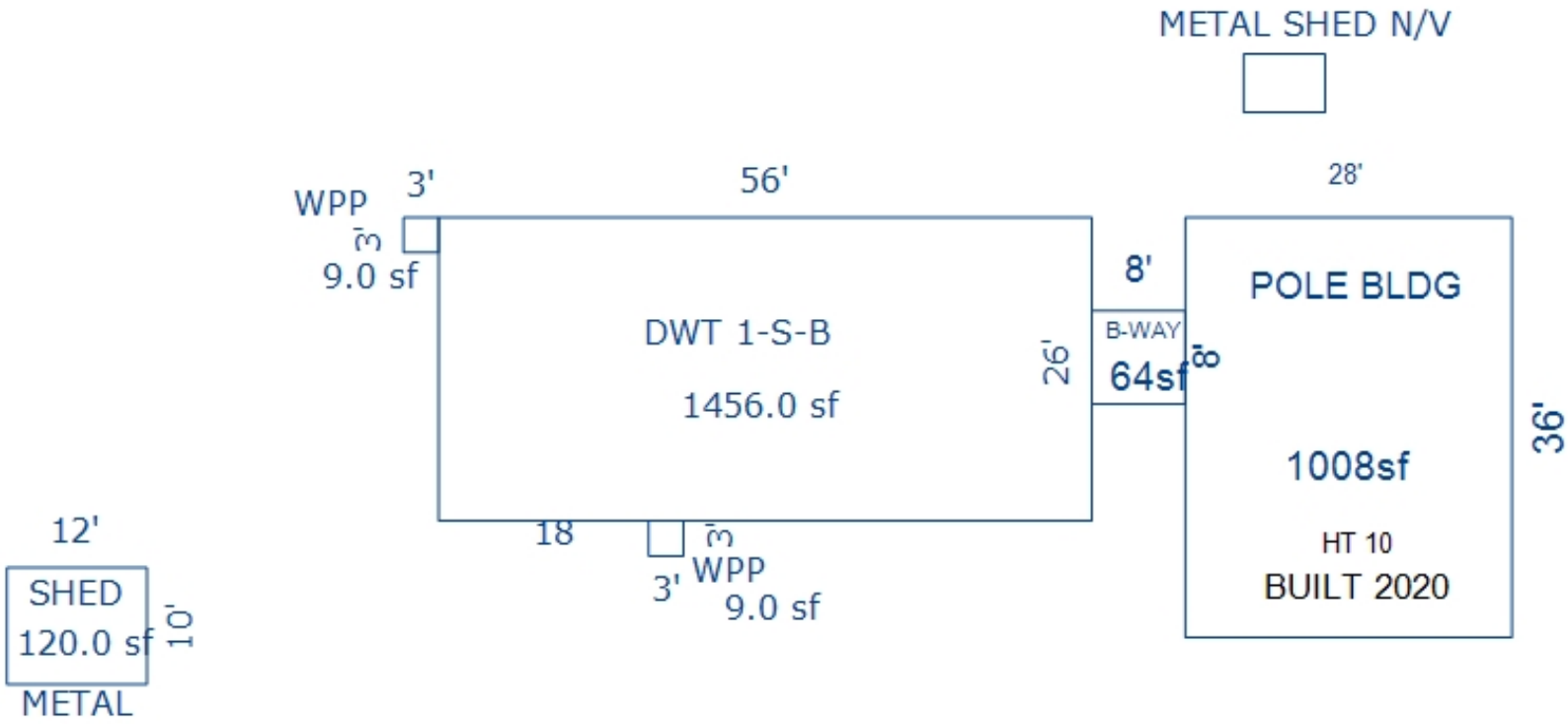

*** Information herein deemed reliable but not guaranteed***

Parcel Number: 2410-31-1101 Jurisdiction: GREENWOOD TWP County: WEXFORD Printed on 02/15/2024

Grantor	Grantee	Sale Price	Sale Date	Inst. Type	Terms of Sale	Liber & Page	Verified By	Prcnt. Trans.

Property Address	Class: RESIDENTIAL-VACANT	Zoning:	Building Permit(s)	Date	Number	Status
	School: MANTON CONSOLIDATED SCHOOLS					
Owner's Name/Address	P.R.E. 0%					
	:					
KEEL, DENNIS D. 4339 HUEY FREELAND MI 48623	2024 Est TCV 12,589					

Improved | X | Vacant

Public Improvements

Dirt Road
Gravel Road
Paved Road
Storm Sewer
Sidewalk
Water
Sewer
Electric
Gas
Curb
Street Lights
Standard Utilities
Underground Utils.

Topography of Site

Level
Rolling
Low
High
Landscaped
Swamp
Wooded
Pond
Waterfront
Ravine
Wetland
Flood Plain

Who When What

GLA 07/10/2019 INSPECTION
GLA 07/10/2019 INSPECTION

Land Value Estimates for Land Table 4010.LAND VALUES

Description	Frontage	Depth	* Factors * Front	Depth	Rate	%Adj.	Reason	Value
ACREAGE			2.270 Acres		5,546	100		12,589
			2.27 Total Acres		Total Est. Land Value =			12,589

Year	Land Value	Building Value	Assessed Value	Board of Review	Tribunal/ Other	Taxable Value
2024	6,300	0	6,300			2,260C
2023	6,200	0	6,200			2,153C
2022	5,100	0	5,100			2,051C
2021	5,100	0	5,100			1,986C

Tax Description

COM AT NE COR OF SEC: W 17.38 FT; S44D 22 1/2'W 423.18 FT TO NE COR LOT 7; S 45D37 1/2'E 446.78 FT TO SE COR LOT 9; N44D22 1/2'E ALONG E LINE OF LOT 9 EXT TO E SEC LINE; N'LY TO BEG. --2.27 A M/L-- GW. SEC. 31 T24N R10W - MANTON

Comments/Influences

The Equalizer. Copyright (c) 1999 - 2009. Licensed To: Township of Greenwood, County of Wexford, Michigan

*** Information herein deemed reliable but not guaranteed***

Parcel Number: 2410-31-1102 Jurisdiction: GREENWOOD TWP County: WEXFORD Printed on 02/15/2024

Grantor	Grantee	Sale Price	Sale Date	Inst. Type	Terms of Sale	Liber & Page	Verified By	Prcnt. Trans.
DEROO, BERWIN ETAL	DEROO, BERWIN & BONNIE L T	1	09/23/2020	QC	14-INTO/OUT OF TRUST	PTA	AGENT	0.0
DEROO, BERWIN	DEROO, BERWIN ET AL	0	04/16/2014	QC	09-FAMILY	667/2250	DEED	50.0
DEROO, BERWIN ETAL	DEROO, BERWIN ETAL	0	04/16/2014	QC	09-FAMILY	667/2250	DEED	50.0

Property Address

Owner's Name/Address

DEROO, BERWIN & BONNIE L TRUST
20021 AUDETTE ST
DEARBORN MI 48124

Tax Description

COM AT SE COR OF LOT 11 OF ORLANDO'S HIDEAWAY: N'LY ALONG LOTS 11 & 10; N44 D22 1/2'E TO SEC LINE; S TO BEG. --.55 A M/L-- GW. SEC. 31 T24N R10W - MANTON

Comments/Influences

Class: RESIDENTIAL-VACANT Zoning:

School: MANTON CONSOLIDATED SCHOOLS

P.R.E. 0%

:

2024 Est TCV 6,024

Building Permit(s)	Date	Number	Status

Improved | X | Vacant

Public Improvements

Dirt Road
Gravel Road
Paved Road
Storm Sewer
Sidewalk
Water
Sewer
Electric
Gas
Curb
Street Lights
Standard Utilities
Underground Utils.

Topography of Site

Level
Rolling
Low
High
Landscaped
Swamp
Wooded
Pond
Waterfront
Ravine
Wetland
Flood Plain

Who When What

GLA 07/10/2019 INSPECTION
GLA 07/10/2019 INSPECTION

Land Value Estimates for Land Table 4010.LAND VALUES

Description	Frontage	Depth	* Factors * Front	Depth	Rate	%Adj.	Reason	Value
ACREAGE			0.550 Acres		10,953	100		6,024
			0.55 Total Acres		Total Est. Land Value =			6,024

Year	Land Value	Building Value	Assessed Value	Board of Review	Tribunal/ Other	Taxable Value
2024	3,000	0	3,000			1,361C
2023	1,700	0	1,700			1,297C
2022	1,400	0	1,400			1,236C
2021	1,700	0	1,700			1,197C

The Equalizer. Copyright (c) 1999 - 2009. Licensed To: Township of Greenwood, County of Wexford, Michigan

*** Information herein deemed reliable but not guaranteed***

Parcel Number: 2410-31-1103 Jurisdiction: GREENWOOD TWP County: WEXFORD Printed on 02/15/2024

Grantor	Grantee	Sale Price	Sale Date	Inst. Type	Terms of Sale	Liber & Page	Verified By	Prcnt. Trans.

Property Address

Class: RESIDENTIAL-VACANT Zoning:

School: MANTON CONSOLIDATED SCHOOLS

P.R.E. 0%

:

2024 Est TCV 7,996

Building Permit(s)	Date	Number	Status

Owner's Name/Address

RAPP, TODD
& CHRISTIANNE
82 JAMES ST
BATTLE CREEK MI 49014

Improved | X | Vacant

Public Improvements

Dirt Road
Gravel Road
Paved Road
Storm Sewer
Sidewalk
Water
Sewer
Electric
Gas
Curb
Street Lights
Standard Utilities
Underground Utils.

Topography of Site

Level
Rolling
Low
High
Landscaped
Swamp
Wooded
Pond
Waterfront
Ravine
Wetland
Flood Plain

Who When What

GLA 07/10/2019 INSPECTION
GLA 07/10/2019 INSPECTION

Land Value Estimates for Land Table 4010.LAND VALUES

Description	Frontage	Depth	* Factors * Front	Depth	Rate	%Adj.	Reason	Value
ACREAGE			0.730 Acres		10,953	100		7,996
			0.030 Acres		0	100		0
			0.76 Total Acres		Total Est. Land Value =			7,996

Tax Description

THAT PART OF N 1/2 OF NE 1/4 LYING SE' LY OF LOT 11 OF HIDEAWAY PLAT & E'LY OF 27 RD --.76 A M/L-- GW. SEC. 31 T24N R10W - MANTON

Comments/Influences

Year	Land Value	Building Value	Assessed Value	Board of Review	Tribunal/ Other	Taxable Value
2024	4,000	0	4,000			1,858C
2023	2,200	0	2,200			1,770C
2022	1,800	0	1,800			1,686C
2021	2,200	0	2,200			1,633C

The Equalizer. Copyright (c) 1999 - 2009.
Licensed To: Township of Greenwood, County of Wexford, Michigan

*** Information herein deemed reliable but not guaranteed***

Parcel Number: 2410-31-1201 Jurisdiction: GREENWOOD TWP County: WEXFORD Printed on 02/15/2024

Grantor	Grantee	Sale Price	Sale Date	Inst. Type	Terms of Sale	Liber & Page	Verified By	Prcnt. Trans.
WILSON, CHER SURV JOSEPH	GRIFFIS, JERRY D & MARLENE	5,500	02/21/2008	WD	03-ARM'S LENGTH	608/2109	DEED	100.0
WETZIG, DAVID L.	WILSON, JOSEPH B.	10,000	09/25/1992	WD	03-ARM'S LENGTH	331:374	DEED	0.0

Property Address

6999 N 27 RD

Owner's Name/Address

GRIFFIS, JERRY D & MARLENE H
8665 MOSCOW RD
HORTON MI 49246

Tax Description

THAT PART OF THE NW 1/4 OF NE 1/4 LY- ING N'LY & E'LY OF SOPER CREEK EXC THE E'LY 24 RDS OF N 20 RDS. --1.98 A M/L-- GW. SEC. 31 T24N R10W -MANTON-

Comments/Influences

The Equalizer. Copyright (c) 1999 - 2009. Licensed To: Township of Greenwood, County of Wexford, Michigan

Class: RESIDENTIAL-IMPROV Zoning:

School: MANTON CONSOLIDATED SCHOOLS

P.R.E. 0%

:

2024 Est TCV 18,575 TCV/TFA: 0.00

Building Permit(s)	Date	Number	Status

X Improved | Vacant

Public Improvements

- Dirt Road
- Gravel Road
- Paved Road
- Storm Sewer
- Sidewalk
- Water
- Sewer
- Electric
- Gas
- Curb
- Street Lights
- Standard Utilities
- Underground Utils.

Topography of Site

- Level
- Rolling
- Low
- High
- Landscaped
- Swamp
- Wooded
- Pond
- Waterfront
- Ravine
- Wetland
- Flood Plain

Who	When	What
GLA	07/10/2019	INSPECTION
GLA	07/10/2019	INSPECTION

Land Value Estimates for Land Table 4010.LAND VALUES

Description	Frontage	Depth	* Factors * Front	Depth	Rate	%Adj.	Reason	Value
ACREAGE			1.980 Acres		5,710	100		11,306
			1.98 Total Acres		Total Est. Land Value =			11,306

Land Improvement Cost Estimates

Description	Rate	Size	% Good	Cash Value
D/W/P: 3.5 Concrete	5.82	192	86	961
Wood Frame	30.22	48	86	1,248
Total Estimated Land Improvements True Cash Value =				2,209

Year	Land Value	Building Value	Assessed Value	Board of Review	Tribunal/ Other	Taxable Value
2024	5,700	3,600	9,300			3,732C
2023	5,500	3,200	8,700			3,555C
2022	4,500	3,000	7,500			3,386C
2021	4,900	3,100	8,000			3,278C

*** Information herein deemed reliable but not guaranteed***

Building Type

X	Single Family
	Mobile Home
	Town Home
	Duplex
	A-Frame
X	Wood Frame

Building Style: CABIN

Yr Built	Remodeled
0	0

Condition: Good

Room List

	Basement
	1st Floor
	2nd Floor
	Bedrooms

(1) Exterior

	Wood/Shingle
X	Aluminum/Vinyl
	Brick
X	Insulation

(2) Windows

	Many		Large
X	Avg.	X	Avg.
	Few		Small

	Wood Sash
	Metal Sash
X	Vinyl Sash
	Double Hung
	Horiz. Slide
	Casement
	Double Glass
	Patio Doors
X	Storms & Screens

(3) Roof

X	Gable		Gambrel
	Hip		Mansard
	Flat		Shed

X	Asphalt Shingle

Chimney:

(3) Roof (cont.)

	Eavestrough
X	Insulation
0	Front Overhang
0	Other Overhang

(4) Interior

X	Drywall		Plaster
	Paneled		Wood T&G

Trim & Decoration

	Ex	X	Ord		Min

Size of Closets

	Lg	X	Ord		Small

Doors:		Solid	X	H.C.	

(5) Floors

Kitchen:
Other: Linoleum
Other: Carpeted

(6) Ceilings

X	Drywall		

(7) Excavation

Basement: 0 S.F.
Crawl: 0 S.F.
Slab: 0 S.F.
Height to Joists: 0.0

(8) Basement

	Conc. Block
	Poured Conc.
	Stone
	Treated Wood
	Concrete Floor

(9) Basement Finish

	Recreation SF
	Living SF
	Walkout Doors (B)
	No Floor SF
	Walkout Doors (A)

(10) Floor Support

Joists:
Unsupported Len:
Cntr.Sup:

(11) Heating/Cooling

X	Gas		Oil		Elec.
	Wood		Coal		Steam

	Forced Air w/o Ducts
	Forced Air w/ Ducts
	Forced Hot Water
	Electric Baseboard
	Elec. Ceil. Radiant
	Radiant (in-floor)
	Electric Wall Heat
	Space Heater
	Wall/Floor Furnace
	Forced Heat & Cool
	Heat Pump
X	No Heating/Cooling
	Central Air
	Wood Furnace

(12) Electric

150	Amps Service

No./Qual. of Fixtures

	Ex.	X	Ord.		Min

No. of Elec. Outlets

	Many	X	Ave.		Few

(13) Plumbing

1	Average Fixture(s)
	3 Fixture Bath
	2 Fixture Bath
	Softener, Auto
	Softener, Manual
	Solar Water Heat
	No Plumbing
	Extra Toilet
	Extra Sink
	Separate Shower
	Ceramic Tile Floor
	Ceramic Tile Wains
	Ceramic Tub Alcove
	Vent Fan

(14) Water/Sewer

	Public Water
	Public Sewer
	Water Well
	1000 Gal Septic
	2000 Gal Septic

Lump Sum Items:

(15) Built-ins

	Appliance Allow.
	Cook Top
	Dishwasher
	Garbage Disposal
	Bath Heater
	Vent Fan
	Hot Tub
	Unvented Hood
	Vented Hood
	Intercom
	Jacuzzi Tub
	Jacuzzi repl.Tub
	Oven
	Microwave
	Standard Range
	Self Clean Range
	Sauna
	Trash Compactor
	Central Vacuum
	Security System

(15) Fireplaces

	Interior 1 Story
	Interior 2 Story
	2nd/Same Stack
	Two Sided
	Exterior 1 Story
	Exterior 2 Story
	Prefab 1 Story
	Prefab 2 Story
	Heat Circulator
	Raised Hearth
	Wood Stove
	Direct-Vented Gas

Class: BC
Effec. Age: 5
Floor Area: 0
Total Base New : 4,150 E.C.F.
Total Depr Cost: 3,901 X 1.297
Estimated T.C.V: 5,060

(16) Porches/Decks

Area	Type

(17) Garage

Year Built:
Car Capacity:
Class:
Exterior:
Brick Ven.:
Stone Ven.:
Common Wall:
Foundation:
Finished ?:
Auto. Doors:
Mech. Doors:
Area:
% Good:
Storage Area:
No Conc. Floor:

Bsmnt Garage:

Carport Area:
Roof:

Cost Est. for Res. Bldg: 1 Single Family CABIN Cls BC Blt 0
(11) Heating System: No Heating/Cooling
Ground Area = 0 SF Floor Area = 0 SF.
Phy/Ab.Phy/Func/Econ/Comb. % Good=95/100/100/100/95
Building Areas

Stories	Exterior	Foundation	Size	Cost New	Depr. Cost	
Other Additions/Adjustments						
Local Cost Items						
SHED #2			532	4,150	3,901	*9
			Totals:	4,150	3,901	

Notes:
ECF (RESIDENTIAL) 1.297 => TCV: 5,060

*** Information herein deemed reliable but not guaranteed***

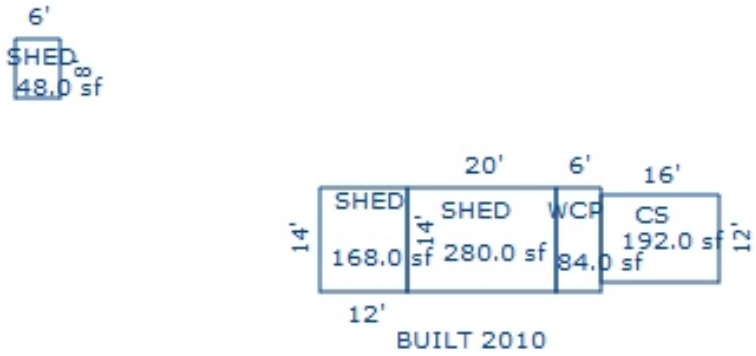

Sketch by Apex Sketch

*** Information herein deemed reliable but not guaranteed***

Parcel Number: 2410-31-1202-01 Jurisdiction: GREENWOOD TWP County: WEXFORD Printed on 02/15/2024

Grantor	Grantee	Sale Price	Sale Date	Inst. Type	Terms of Sale	Liber & Page	Verified By	Prcnt. Trans.
GRIFFIS, ROBERT ETAL	GRIFFIS, KENNETH R	0	03/08/2019	WD	08-ESTATE	684/2663	DEED	0.0
GRIFFIS, KENNETH R	GRIFFIS, ROBERT DALE	0	03/08/2019	WD	09-FAMILY	6842/830	DEED	0.0
BURDSAL, MICHAEL J & MICHE	GRIFFIS, ROBERT ETAL	84,900	09/20/2013	WD	03-ARM'S LENGTH	662/1993	DEED	100.0

Property Address

6991 N 27 RD

Owner's Name/Address

GRIFFIS, ROBERT DALE
9090 WILBUR LAKE RD
HANOVER MI 49241

Tax Description

E 24 RDS OF N 20 RDS OF NW 1/4 OF NE 1/4 EXC PAR COM AT NE COR OF SEC & N LINE OF ORLANDO'S HIDEAWAY W 1313.76 FT; S 211 FT TO N COR OF LOT 21 & POB: S 119.18 FT; W 119.79 FT; N45D09M01S E 168.7 FT TO POB. -2.83 A M/L-GW. SEC. 31 T24N R10W - MANTON SPLIT ON 09/26/2008 FROM 2410-31-1202;

Comments/Influences

SPLIT/COMB. ON 09/26/2008 COMPLETED 03/06/ 2009 DEB OWNER REQUEST ; PARENT PARCEL(S): 2410-31-1202;

The Equalizer. Copyright (c) 1999 - 2009. Licensed To: Township of Greenwood, County of Wexford, Michigan

Class: RESIDENTIAL-IMPROV Zoning:

School: MANTON CONSOLIDATED SCHOOLS

P.R.E. 0%

:

2024 Est TCV 131,743 TCV/TFA: 136.38

Building Permit(s)	Date	Number	Status

X Improved | | Vacant

Public Improvements

- Dirt Road
- Gravel Road
- Paved Road
- Storm Sewer
- Sidewalk
- Water
- Sewer
- Electric
- Gas
- Curb
- Street Lights
- Standard Utilities
- Underground Utils.

Topography of Site

- Level
- Rolling
- Low
- High
- Landscaped
- Swamp
- Wooded
- Pond
- Waterfront
- Ravine
- Wetland
- Flood Plain

Who	When	What
GLA	07/10/2019	INSPECTION
GLA	07/10/2019	INSPECTION

Land Value Estimates for Land Table 4010.LAND VALUES

Description	Frontage	Depth	* Factors * Front	Depth	Rate	%Adj.	Reason	Value
ACREAGE			2.630 Acres		5,546	100		14,586
ROW			0.200 Acres		0	100		0
			2.83 Total Acres		Total Est. Land Value =			14,586

Land Improvement Cost Estimates

Description	Rate	Size	% Good	Cash Value
D/W/P: 4in Concrete	6.15	1299	41	3,275
D/W/P: 4in Concrete	6.15	278	41	701
Total Estimated Land Improvements True Cash Value =				3,976

Year	Land Value	Building Value	Assessed Value	Board of Review	Tribunal/ Other	Taxable Value
2024	7,300	58,600	65,900			44,524C
2023	6,900	48,100	55,000			42,404C
2022	5,900	41,400	47,300			40,385C
2021	5,500	42,500	48,000			39,095C

*** Information herein deemed reliable but not guaranteed***

Building Type

X	Single Family
	Mobile Home
	Town Home
	Duplex
	A-Frame
X	Wood Frame

Building Style: PLAIN

Yr Built	Remodeled
0	0

Condition: Good

Room List

	Basement
	1st Floor
	2nd Floor
	Bedrooms

(1) Exterior

	Wood/Shingle
X	Aluminum/Vinyl
	Brick
X	Insulation

(2) Windows

	Many		Large
X	Avg.	X	Avg.
	Few		Small

	Wood Sash
	Metal Sash
X	Vinyl Sash
	Double Hung
	Horiz. Slide
	Casement
	Double Glass
	Patio Doors
X	Storms & Screens

(3) Roof

X	Gable		Gambrel
	Hip		Mansard
	Flat		Shed

X	Asphalt Shingle

Chimney:

(3) Roof (cont.)

	Eavestrough
X	Insulation
0	Front Overhang
0	Other Overhang

(4) Interior

X	Drywall		Plaster
	Paneled		Wood T&G

Trim & Decoration

	Ex	X	Ord		Min

Size of Closets

	Lg	X	Ord		Small

Doors:		Solid	X	H.C.	

(5) Floors

Kitchen:
Other: Linoleum
Other: Carpeted

(6) Ceilings

X	Drywall		

(7) Excavation

Basement: 0 S.F.
Crawl: 0 S.F.
Slab: 966 S.F.
Height to Joists: 0.0

(8) Basement

	Conc. Block
	Poured Conc.
	Stone
	Treated Wood
	Concrete Floor

(9) Basement Finish

	Recreation SF
	Living SF
	Walkout Doors (B)
	No Floor SF
	Walkout Doors (A)

(10) Floor Support

Joists:
Unsupported Len:
Cntr.Sup:

(11) Heating/Cooling

X	Gas		Oil		Elec.
	Wood		Coal		Steam

	Forced Air w/o Ducts
X	Forced Air w/ Ducts
	Forced Hot Water
	Electric Baseboard
	Elec. Ceil. Radiant
	Radiant (in-floor)
	Electric Wall Heat
	Space Heater
	Wall/Floor Furnace
	Forced Heat & Cool
	Heat Pump
	No Heating/Cooling

	Central Air
	Wood Furnace

(12) Electric

150	Amps Service

No./Qual. of Fixtures

	Ex.	X	Ord.		Min

No. of Elec. Outlets

	Many	X	Ave.		Few

(13) Plumbing

	Average Fixture(s)
1	3 Fixture Bath
	2 Fixture Bath
	Softener, Auto
	Softener, Manual
	Solar Water Heat
	No Plumbing
	Extra Toilet
	Extra Sink
	Separate Shower
	Ceramic Tile Floor
	Ceramic Tile Wains
	Ceramic Tub Alcove
	Vent Fan

(14) Water/Sewer

	Public Water
	Public Sewer
1	Water Well
1	1000 Gal Septic
	2000 Gal Septic

Lump Sum Items:

(15) Built-ins

	Appliance Allow.
	Cook Top
	Dishwasher
	Garbage Disposal
	Bath Heater
	Vent Fan
	Hot Tub
	Unvented Hood
	Vented Hood
	Intercom
	Jacuzzi Tub
	Jacuzzi repl.Tub
	Oven
	Microwave
	Standard Range
	Self Clean Range
	Sauna
	Trash Compactor
	Central Vacuum
	Security System

(15) Fireplaces

	Interior 1 Story
	Interior 2 Story
	2nd/Same Stack
	Two Sided
1	Exterior 1 Story
	Exterior 2 Story
	Prefab 1 Story
	Prefab 2 Story
	Heat Circulator
	Raised Hearth
	Wood Stove
	Direct-Vented Gas

Class: CD
Effec. Age: 55
Floor Area: 966
Total Base New : 193,919 E.C.F.
Total Depr Cost: 87,264 X 1.297
Estimated T.C.V: 113,181

(16) Porches/Decks

Area	Type
160	CGEP (1 Story)

(17) Garage

Year Built:
Car Capacity:
Class: CD
Exterior: Block
Brick Ven.: 0
Stone Ven.: 0
Common Wall: Detache
Foundation: 18 Inch
Finished ?:
Auto. Doors: 0
Mech. Doors: 0
Area: 1404
% Good: 0
Storage Area: 0
No Conc. Floor: 0

Bsmnt Garage:

Carport Area:
Roof:

Cost Est. for Res. Bldg: 1 Single Family PLAIN Cls CD Blt 0
(11) Heating System: Forced Air w/ Ducts
Ground Area = 966 SF Floor Area = 966 SF.
Phy/Ab.Phy/Func/Econ/Comb. % Good=45/100/100/100/45
Building Areas

Stories	Exterior	Foundation	Size	Cost New	Depr. Cost
1 Story	Block	Slab	966		
			Total:	113,254	50,964
Other Additions/Adjustments					
Water/Sewer					
1000 Gal Septic			1	4,483	2,017
Water Well, 100 Feet			1	5,720	2,574
Porches					
CGEP (1 Story)			160	9,278	4,175
Garages					
Class: D Exterior: Siding Foundation: 18 Inch (Unfinished)					
Base Cost			308	11,128	5,008
Class: CD Exterior: Block Foundation: 18 Inch (Unfinished)					
Base Cost			1404	44,268	19,921
Fireplaces					
Exterior 1 Story			1	5,788	2,605
			Totals:	193,919	87,264

Notes:
ECF (RESIDENTIAL) 1.297 => TCV: 113,181

*** Information herein deemed reliable but not guaranteed***

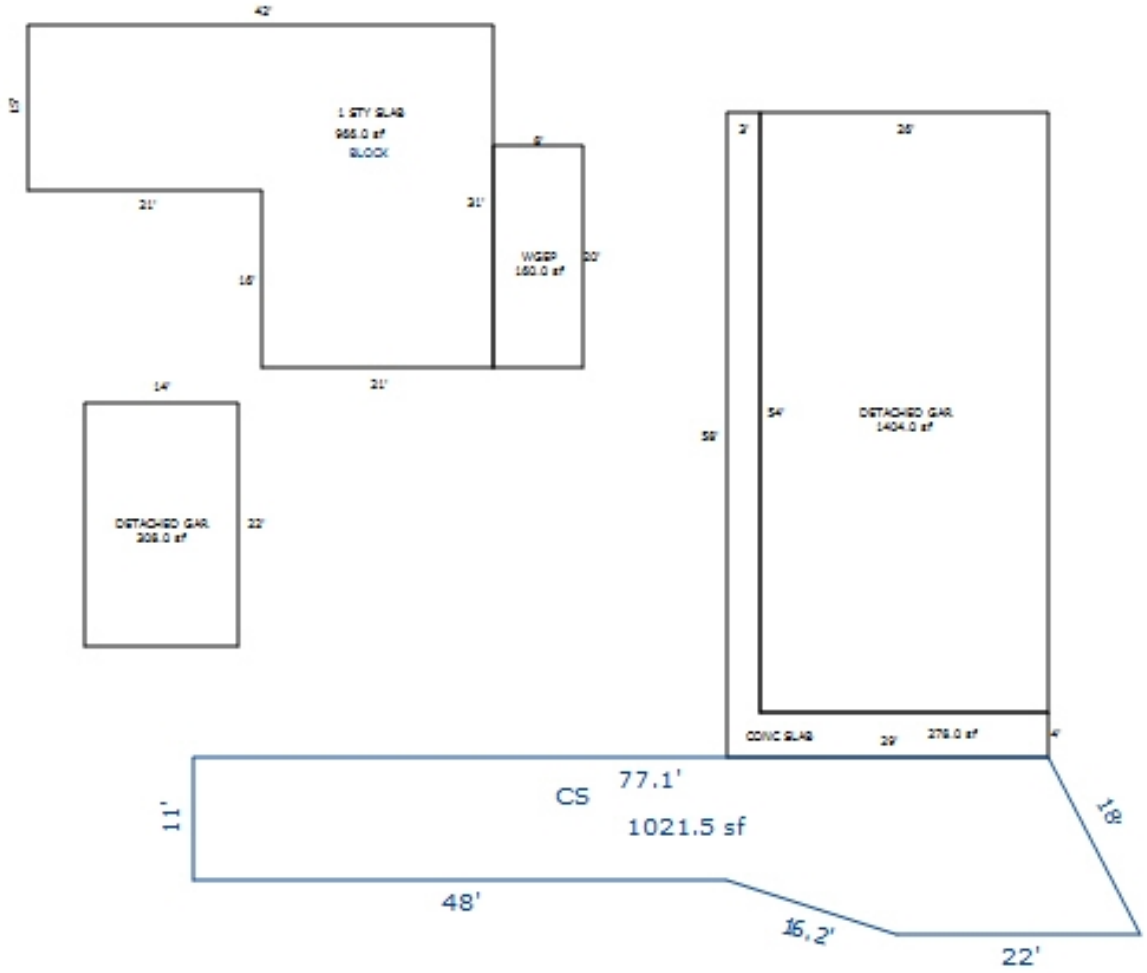

Sketch by Apex Sketch

*** Information herein deemed reliable but not guaranteed***

Parcel Number: 2410-31-1202-02 Jurisdiction: GREENWOOD TWP County: WEXFORD Printed on 02/15/2024

Grantor	Grantee	Sale Price	Sale Date	Inst. Type	Terms of Sale	Liber & Page	Verified By	Prcnt. Trans.
WEXFORD COUNTY TREASURER	GREENWOOD TOWNSHIP	0	12/31/2012	QC	21-NOT USED/OTHER	654/2021	DEED	0.0
CARRICO, THOMAS A & LESLIE	WEXFORD COUNTY TREASURER	0	04/02/2012	OTH	06-COURT JUDGEMENT	645/2586	DEED	0.0
BURDSAL, MICHAEL J & MICHE	CARRICO, THOMAS A & LESLIE	0	02/01/2007	WD	32-SPLIT VACANT	614/2303	DEED	0.0

Property Address

Owner's Name/Address

GREENWOOD TOWNSHIP
8202 N 33 RD
MANTON MI 49663

Tax Description

PAR COM AT NE COR OF SEC & N LINE OF ORLANDO'S HIDEAWAY W 1313.76 FT; S 211 FT TO N COR OF LOT 21 & POB: S 119.18 FT; W 119.79 FT; N45D09M01S E 168.7 FT TO POB-.16 A M/L- GW. SEC. 31 T24N R10W - MANTON SPLIT ON 09/26/2008 FROM 2410-31-1202;

Comments/Influences

SPLIT/COMB. ON 09/26/2008 COMPLETED 3/06/2009 DEB OWNER REQUEST ;
PARENT PARCEL(S): 2410-31-1202;
CHILD PARCEL(S): 2410-31-1202-01, 2410-31-1202-02;

Class: COMMERCIAL-VACANT Zoning:

School: MANTON CONSOLIDATED SCHOOLS

P.R.E. 0%

:

2024 Est TCV 0

Building Permit(s)	Date	Number	Status

Improved | X | Vacant

Public Improvements

- Dirt Road
- Gravel Road
- Paved Road
- Storm Sewer
- Sidewalk
- Water
- Sewer
- Electric
- Gas
- Curb
- Street Lights
- Standard Utilities
- Underground Utils.

Topography of Site

- Level
- Rolling
- Low
- High
- Landscaped
- Swamp
- Wooded
- Pond
- Waterfront
- Ravine
- Wetland
- Flood Plain

Who	When	What
GLA	07/10/2019	INSPECTION
GLA	07/10/2019	INSPECTION

Land Value Estimates for Land Table 4010.LAND VALUES

Description	Frontage	Depth	* Factors * Front	Depth	Rate	%Adj.	Reason	Value
ACREAGE			0.160	Acres	10,953	100		1,752
			0.16	Total Acres		Total Est. Land Value =		1,752

Year	Land Value	Building Value	Assessed Value	Board of Review	Tribunal/ Other	Taxable Value
2024	EXEMPT	EXEMPT	EXEMPT			EXEMPT
2023	EXEMPT	EXEMPT	EXEMPT			EXEMPT
2022	0	0	0			0
2021	0	0	0			0

The Equalizer. Copyright (c) 1999 - 2009. Licensed To: Township of Greenwood, County of Wexford, Michigan

*** Information herein deemed reliable but not guaranteed***

Parcel Number: 2410-31-1203 Jurisdiction: GREENWOOD TWP County: WEXFORD Printed on 02/15/2024

Grantor	Grantee	Sale Price	Sale Date	Inst. Type	Terms of Sale	Liber & Page	Verified By	Prcnt. Trans.
GLADYSZ, STELLA	GLADYSZ, STELLA LE TRUST	0	07/19/2013	QC	18-LIFE ESTATE	663/416	DEED	0.0

Property Address

6859 N 27 RD

Owner's Name/Address

GLADYSZ, STELLA LE TRUST
27415 VIRGINIA DR
WARREN MI 48092

Class: RESIDENTIAL-IMPROV Zoning:

School: MANTON CONSOLIDATED SCHOOLS

P.R.E. 0%

:

2024 Est TCV 157,407 TCV/TFA: 197.75

Building Permit(s)	Date	Number	Status

X Improved | Vacant

Public Improvements

- Dirt Road
- Gravel Road
- Paved Road
- Storm Sewer
- Sidewalk
- Water
- Sewer
- Electric
- Gas
- Curb
- Street Lights
- Standard Utilities
- Underground Utils.

Topography of Site

- Level
- Rolling
- Low
- High
- Landscaped
- Swamp
- Wooded
- Pond
- Waterfront
- Ravine
- Wetland
- Flood Plain

Tax Description

N 1/2 OF NE 1/4 LYING W OF SOPER CREEK EXC LOT 20, PLAT OF ORLANDO'S HIDE- AWAY & EXC PARCEL 20 RDS N & S & 24 RDS E & W IN NE COR OF NW 1/4 OF NE 1/4; AND INCLUDING THAT PORTION OF NE 1/4 OF NE 1/4 LYING E'LY OF SOPER CRK & BETWEEN LOTS 15 & 16 ORLANDOS' HIDE- AWAY WHICH PARCEL IS 66 FT WIDE & SE- CURES ACCESS TO 27-MILE RD. --43.71 A M/L-- GW. SEC. 31 T24N R10W -MANTON-

Comments/Influences

MARIAN GLADYSZ DECEASED PER WIFE

Who	When	What
GLA	07/10/2019	INSPECTION
GLA	07/10/2019	INSPECTION

Land Value Estimates for Land Table 4010.LAND VALUES

Description	Frontage	Depth	* Factors * Front	Depth	Rate	%Adj.	Reason	Value
ACREAGE			43.660 Acres		2,722	100		118,843
			0.050 Acres		0	100		0
			43.71 Total Acres		Total Est. Land Value =			118,843

Year	Land Value	Building Value	Assessed Value	Board of Review	Tribunal/ Other	Taxable Value
2024	59,400	19,300	78,700			23,547C
2023	56,600	15,600	72,200			22,426C
2022	39,600	13,100	52,700			21,359C
2021	37,100	11,300	48,400			20,677C

The Equalizer. Copyright (c) 1999 - 2009.
Licensed To: Township of Greenwood, County of Wexford, Michigan

*** Information herein deemed reliable but not guaranteed***

Building Type

	Single Family
X	Mobile Home
	Town Home
	Duplex
	A-Frame

X	Wood Frame

Building Style: SWT/DWT

Yr Built	Remodeled
0	0

Condition: Poor

Room List

	Basement
	1st Floor
	2nd Floor
	Bedrooms

(1) Exterior

	Wood/Shingle
X	Aluminum/Vinyl
	Brick
X	Insulation

(2) Windows

X	Many Avg. Few	X	Large Avg. Small

	Wood Sash
	Metal Sash
X	Vinyl Sash
	Double Hung
	Horiz. Slide
	Casement
	Double Glass
	Patio Doors
X	Storms & Screens

(3) Roof

X	Gable		Gambrel
	Hip		Mansard
	Flat		Shed

X	Asphalt Shingle

Chimney:

(3) Roof (cont.)

	Eavestrough
X	Insulation
0	Front Overhang
0	Other Overhang

(4) Interior

X	Drywall Paneled		Plaster Wood T&G

Trim & Decoration

	Ex	X	Ord		Min

Size of Closets

	Lg	X	Ord		Small

Doors: | | Solid | X | H.C.

(5) Floors

Kitchen:
Other: Linoleum
Other: Carpeted

(6) Ceilings

X	Drywall		

(7) Excavation

Basement: 0 S.F.
Crawl: 336 S.F.
Slab: 0 S.F.
Height to Joists: 0.0

(8) Basement

	Conc. Block
	Poured Conc.
	Stone
	Treated Wood
	Concrete Floor

(9) Basement Finish

	Recreation SF
	Living SF
	Walkout Doors (B)
	No Floor SF
	Walkout Doors (A)

(10) Floor Support

Joists:
Unsupported Len:
Cntr.Sup:

(11) Heating/Cooling

X	Gas		Oil		Elec.
	Wood		Coal		Steam

X	Forced Warm Air
	Wall Furnace
	Warm & Cool Air
	Heat Pump

	Central Air
	Wood Furnace

(12) Electric

150	Amps Service

No./Qual. of Fixtures

	Ex.	X	Ord.		Min

No. of Elec. Outlets

	Many	X	Ave.		Few

(13) Plumbing

1	Average Fixture(s)
	3 Fixture Bath
	2 Fixture Bath
	Softener, Auto
	Softener, Manual
	Solar Water Heat
	No Plumbing
	Extra Toilet
	Extra Sink
	Separate Shower
	Ceramic Tile Floor
	Ceramic Tile Wains
	Ceramic Tub Alcove
	Vent Fan

(14) Water/Sewer

	Public Water
	Public Sewer
1	Water Well
1	1000 Gal Septic
	2000 Gal Septic

Lump Sum Items:

(15) Built-ins

	Appliance Allow.
	Cook Top
	Dishwasher
	Garbage Disposal
	Bath Heater
	Vent Fan
	Hot Tub
	Unvented Hood
	Vented Hood
	Intercom
	Jacuzzi Tub
	Jacuzzi repl.Tub
	Oven
	Microwave
	Standard Range
	Self Clean Range
	Sauna
	Trash Compactor
	Central Vacuum
	Security System

(15) Fireplaces

	Interior 1 Story
	Interior 2 Story
	2nd/Same Stack
	Two Sided
	Exterior 1 Story
	Exterior 2 Story
	Prefab 1 Story
	Prefab 2 Story
	Heat Circulator
	Raised Hearth
	Wood Stove
	Direct-Vented Gas

Class: Low
Effec. Age: 20
Floor Area:
Total Base New : 64,634 E.C.F.
Total Depr Cost: 29,733 X 1.297
Estimated T.C.V: 38,564

(16) Porches/Decks

Area	Type

(17) Garage

Year Built:
Car Capacity:
Class:
Exterior:
Brick Ven.:
Stone Ven.:
Common Wall:
Foundation:
Finished ?:
Auto. Doors:
Mech. Doors:
Area:
% Good:
Storage Area:
No Conc. Floor:

Bsmnt Garage:

Carport Area:
Roof:

Cost Est. for Res. Bldg: 1 Mobile Home SWT/DWT Cls Low Blt 0
(11) Heating System: Wall Furnace
Ground Area = 796 SF Floor Area = 796 SF.
Phy/Ab.Phy/Func/Econ/Comb. % Good=46/100/100/100/46
Building Areas

Type	Ext. Walls	Roof/Fnd.	Size	Cost New	Depr. Cost
Main Home	Ribbed	Metal	460		
Addition	Siding	Crawl	336		
			Total:	49,866	22,939
Other Additions/Adjustments					
Skirting, Metal or Vinyl, Vertical			70	760	350
Water/Sewer					
1000 Gal Septic			1	4,293	1,975
Water Well, 100 Feet			1	5,545	2,551
Local Cost Items					
FREE STANDING ROOF			576	4,170	1,918
			Totals:	64,634	29,733

Notes:

ECF (RESIDENTIAL) 1.297 => TCV: 38,564

*** Information herein deemed reliable but not guaranteed***

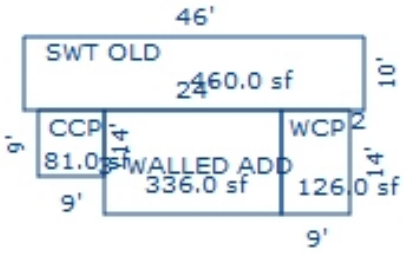

Sketch by Apex Sketch

*** Information herein deemed reliable but not guaranteed***

Parcel Number: 2410-31-1301 Jurisdiction: GREENWOOD TWP County: WEXFORD Printed on 02/15/2024

Grantor	Grantee	Sale Price	Sale Date	Inst. Type	Terms of Sale	Liber & Page	Verified By	Prcnt. Trans.
STEINBRENNER, JEREMIAH	STEINBRENNER ROBERT & HEI	0	11/30/2012	WD	21-NOT USED/OTHER	666;1824	DEED	0.0
SHELBY DESIGN LAND	STEINBRENNER, JEREMIAH & H	77,000	03/19/1993	WD	03-ARM'S LENGTH	333:629	DEED	0.0
WELCH, GLENN C.	SHELBY DESIGN LAND DEVELOP	39,500	08/05/1989	MLC	18-LIFE ESTATE	316:776	DEED	0.0

Property Address

6771 N 27 RD

Owner's Name/Address

STEINBRENNER, ROBERT & HEIDI
6771 N 27 RD
MANTON MI 49663

Tax Description

PAR COM AT E 1/4 COR; TH N 655.61 FT TO POB: W 2617.18 FT; N 652.36 FT; E 2428.78 FT TO C/L OF 27 RD; S 364.04 FT; S 65D 07M31S E 151.70 FT; S 157.40 FT TO POB, AKA PARCEL A PER REG SURVEY REC L69, P333; ALSO PAR COM AT E 1/4 COR; N 813.01 FT TO POB; N 498.22 FT; W 192.03 FT TO C/L OF 27 RD; S 364.04 FT; S 65D07M13S E 151.70 FT TO POB, AKA PARCEL B; ALSO PAR COM AT E 1/4 COR OF SEC; N 655.61 FT; W 2617.18 FT; S 652.35 FT; E 2613.56 FT TO POB, AKA PARCEL C --78.56 A M/L-- GW. SEC. 31 T24N R10W -MANTON- [[COMBINED 31-1302, 31-1303 '98

Comments/Influences

Class: RESIDENTIAL-IMPROV Zoning:

School: MANTON CONSOLIDATED SCHOOLS

P.R.E. 100% 04/02/2014

:

2024 Est TCV 307,290 TCV/TFA: 320.76

Building Permit(s)	Date	Number	Status
RESIDENTIAL - NEW	02/07/2003	PM6571	
RESIDENTIAL - REMODEL	01/30/2003	PM6554	
RESIDENTIAL - REMODEL	10/07/2002	PB11239	

X Improved | Vacant

Public Improvements

Dirt Road
Gravel Road
Paved Road
Storm Sewer
Sidewalk
Water
Sewer
Electric
Gas
Curb
Street Lights
Standard Utilities
Underground Utils.

Topography of Site

Level
Rolling
Low
High
Landscaped
Swamp
Wooded
Pond
Waterfront
Ravine
Wetland
Flood Plain

Who When What

GLA 07/10/2019 INSPECTION
GLA 07/10/2019 INSPECTION

Land Value Estimates for Land Table 4010.LAND VALUES

Description	Frontage	Depth	* Factors * Front	Depth	Rate	%Adj.	Reason	Value
ACREAGE			78.300 Acres		2,547	100		199,435
			0.260 Acres		0	100		0
			78.56 Total Acres		Total Est. Land Value =			199,435

Year	Land Value	Building Value	Assessed Value	Board of Review	Tribunal/ Other	Taxable Value
2024	99,700	53,900	153,600			48,161C
2023	84,800	44,200	129,000			45,868C
2022	66,600	37,500	104,100			43,684C
2021	60,900	38,100	99,000			42,289C

The Equalizer. Copyright (c) 1999 - 2009.
Licensed To: Township of Greenwood, County of Wexford, Michigan

*** Information herein deemed reliable but not guaranteed***

Building Type

X	Single Family
	Mobile Home
	Town Home
	Duplex
	A-Frame
X	Wood Frame

Building Style: PLAIN

Yr Built	Remodeled
0	0

Condition: Average

Room List

	Basement
	1st Floor
	2nd Floor
	Bedrooms

(1) Exterior

	Wood/Shingle
X	Aluminum/Vinyl
	Brick
X	Insulation

(2) Windows

	Many		Large
X	Avg.	X	Avg.
	Few		Small

	Wood Sash
	Metal Sash
X	Vinyl Sash
	Double Hung
	Horiz. Slide
	Casement
	Double Glass
	Patio Doors
X	Storms & Screens

(3) Roof

X	Gable		Gambrel
	Hip		Mansard
	Flat		Shed

X	Asphalt Shingle

Chimney:

(3) Roof (cont.)

	Eavestrough
X	Insulation
0	Front Overhang
0	Other Overhang

(4) Interior

X	Drywall		Plaster
	Paneled		Wood T&G

Trim & Decoration

	Ex	X	Ord		Min

Size of Closets

	Lg	X	Ord		Small

Doors:		Solid	X	H.C.	

(5) Floors

Kitchen:
Other: Linoleum
Other: Carpeted

(6) Ceilings

X	Drywall		

(7) Excavation

Basement: 0 S.F.
Crawl: 0 S.F.
Slab: 958 S.F.
Height to Joists: 0.0

(8) Basement

	Conc. Block
	Poured Conc.
	Stone
	Treated Wood
	Concrete Floor

(9) Basement Finish

	Recreation SF
	Living SF
	Walkout Doors (B)
	No Floor SF
	Walkout Doors (A)

(10) Floor Support

Joists:
Unsupported Len:
Cntr.Sup:

(11) Heating/Cooling

X	Gas		Oil		Elec.
	Wood		Coal		Steam

	Forced Air w/o Ducts
X	Forced Air w/ Ducts
	Forced Hot Water
	Electric Baseboard
	Elec. Ceil. Radiant
	Radiant (in-floor)
	Electric Wall Heat
	Space Heater
	Wall/Floor Furnace
	Forced Heat & Cool
	Heat Pump
	No Heating/Cooling
	Central Air
	Wood Furnace

(12) Electric

150	Amps Service

No./Qual. of Fixtures

	Ex.	X	Ord.		Min

No. of Elec. Outlets

	Many	X	Ave.		Few

(13) Plumbing

	Average Fixture(s)
1	3 Fixture Bath
	2 Fixture Bath
	Softener, Auto
	Softener, Manual
	Solar Water Heat
	No Plumbing
	Extra Toilet
	Extra Sink
	Separate Shower
	Ceramic Tile Floor
	Ceramic Tile Wains
	Ceramic Tub Alcove
	Vent Fan

(14) Water/Sewer

	Public Water
	Public Sewer
1	Water Well
1	1000 Gal Septic
	2000 Gal Septic

Lump Sum Items:

(15) Built-ins

	Appliance Allow.
	Cook Top
	Dishwasher
	Garbage Disposal
	Bath Heater
	Vent Fan
	Hot Tub
	Unvented Hood
	Vented Hood
	Intercom
	Jacuzzi Tub
	Jacuzzi repl.Tub
	Oven
	Microwave
	Standard Range
	Self Clean Range
	Sauna
	Trash Compactor
	Central Vacuum
	Security System

(15) Fireplaces

	Interior 1 Story
	Interior 2 Story
	2nd/Same Stack
	Two Sided
	Exterior 1 Story
	Exterior 2 Story
	Prefab 1 Story
	Prefab 2 Story
	Heat Circulator
	Raised Hearth
	Wood Stove
	Direct-Vented Gas

Class: CD
Effec. Age: 48
Floor Area: 958
Total Base New : 159,916 E.C.F.
Total Depr Cost: 83,157 X 1.297
Estimated T.C.V: 107,855

(16) Porches/Decks

Area	Type
54	WSEP (1 Story)
144	4in Concrete

(17) Garage

Year Built:
Car Capacity:
Class: CD
Exterior: Pole
Brick Ven.: 0
Stone Ven.: 0
Common Wall: Detache
Foundation: 18 Inch
Finished ?:
Auto. Doors: 0
Mech. Doors: 0
Area: 1576
% Good: 0
Storage Area: 0
No Conc. Floor: 0

Bsmnt Garage:

Carport Area:
Roof:

Cost Est. for Res. Bldg: 1 Single Family PLAIN Cls CD Blt 0
(11) Heating System: Forced Air w/ Ducts
Ground Area = 958 SF Floor Area = 958 SF.
Phy/Ab.Phy/Func/Econ/Comb. % Good=52/100/100/100/52
Building Areas

Stories	Exterior	Foundation	Size	Cost New	Depr. Cost
1 Story	Siding	Slab	958		
			Total:	110,903	57,669
Other Additions/Adjustments					
Water/Sewer					
1000 Gal Septic			1	4,582	2,383
Water Well, 100 Feet			1	5,680	2,954
Porches					
WSEP (1 Story)			54	3,407	1,772
4in Concrete			144	1,066	554
Garages					
Class: CD Exterior: Pole (Unfinished)					
Base Cost			1576	34,278	17,825
			Totals:	159,916	83,157

Notes:
ECF (RESIDENTIAL) 1.297 => TCV: 107,855

*** Information herein deemed reliable but not guaranteed***

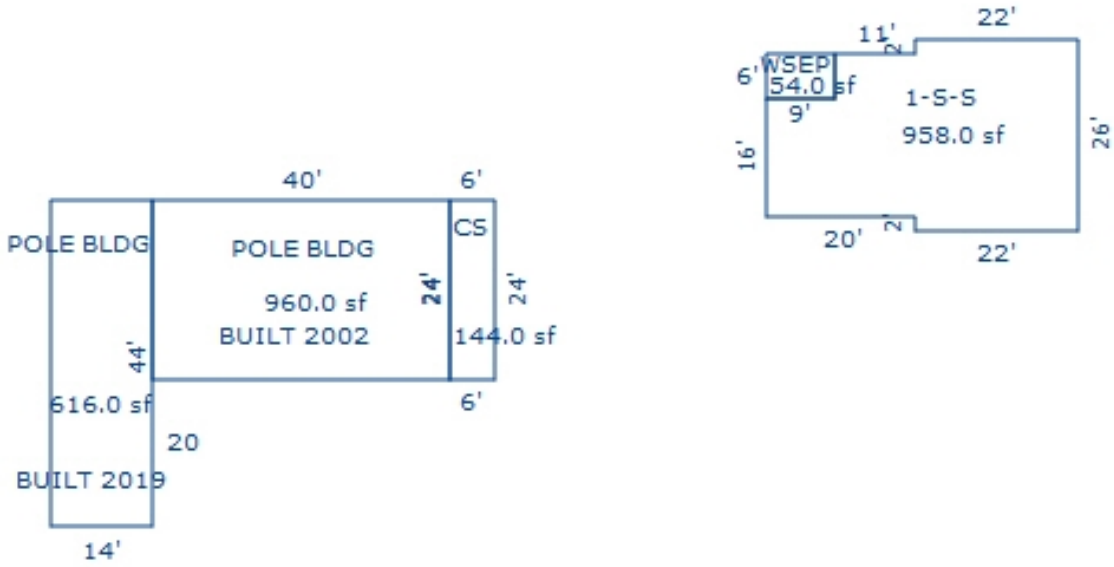

Sketch by Apex Sketch

*** Information herein deemed reliable but not guaranteed***

Parcel Number: 2410-31-2101 Jurisdiction: GREENWOOD TWP County: WEXFORD Printed on 02/15/2024

Grantor	Grantee	Sale Price	Sale Date	Inst. Type	Terms of Sale	Liber & Page	Verified By	Prcnt. Trans.

Property Address	Class: AGRICULTURAL-VACAN	Zoning:	Building Permit(s)	Date	Number	Status
	School: MANTON CONSOLIDATED SCHOOLS					
Owner's Name/Address	P.R.E. 0%					
	:					
STATE OF MICHIGAN P O BOX 30735 GRANTS ADMINISTRATION LANSING MI 48909-8235	2024 Est TCV 0					

Improved | X | Vacant

Land Value Estimates for Land Table 4010.LAND VALUES

Description	Frontage	Depth	* Factors * Front	Depth	Rate	%Adj.	Reason	Value
ACREAGE			71.490 Acres		2,577	100		184,195
			71.49 Total Acres		Total Est. Land Value =			184,195

Public Improvements

- Dirt Road
- Gravel Road
- Paved Road
- Storm Sewer
- Sidewalk
- Water
- Sewer
- Electric
- Gas
- Curb
- Street Lights
- Standard Utilities
- Underground Utils.

Topography of Site

- Level
- Rolling
- Low
- High
- Landscaped
- Swamp
- Wooded
- Pond
- Waterfront
- Ravine
- Wetland
- Flood Plain

Tax Description

FRL N 1/2 OF FRL NW 1/4 GW. SEC. 31 T24N R10W - MANTON 71.49 A.

Comments/Influences

Who	When	What
GLA	07/10/2019	INSPECTION
GLA	07/10/2019	INSPECTION

Year	Land Value	Building Value	Assessed Value	Board of Review	Tribunal/ Other	Taxable Value
2024	EXEMPT	EXEMPT	EXEMPT			EXEMPT
2023	EXEMPT	EXEMPT	EXEMPT			EXEMPT
2022	0	0	0			0
2021	0	0	0			0

The Equalizer. Copyright (c) 1999 - 2009. Licensed To: Township of Greenwood, County of Wexford, Michigan

*** Information herein deemed reliable but not guaranteed***

Parcel Number: 2410-31-2303 Jurisdiction: GREENWOOD TWP County: WEXFORD Printed on 02/15/2024

Grantor	Grantee	Sale Price	Sale Date	Inst. Type	Terms of Sale	Liber & Page	Verified By	Prcnt. Trans.
BUCKUS, KENNETH		0	08/30/2021	QC	21-NOT USED/OTHER	690/2876	DEED	0.0
BACKUS, KENNETH A.	VANDER WERF, PHILLIP N & N	146,000	08/09/2021	WD	03-ARM'S LENGTH	690/2877	DEED	100.0
MINNIE	BACKUS	12,000	12/15/2009	WD	03-ARM'S LENGTH	626/2512	DEED	0.0

Property Address

Owner's Name/Address

VANDER WERF, PHILLIP N & NANCY E
25665 JEFFERSON CTR ST
CASSOPOLIS MI 49031

Tax Description

PAR COM 1303.50 FT N & 632.71 FT E OF W 1/4 COR: E 542.64 FT; S 694.09 FT; W 335.58 FT; S 320.94 FT; N 79D31'56" W 219.29 FT; N 973.50 FT TO POB AKA PAR C & PAR COM 1303.50 FT N OF W 1/4 COR: E 349.38 FT; S 705.51 FT; S28D37'33"W 33.52 FT; N71D27'23"W 187.43 FT; N54D 31'23"W 188.32 FT; N 563.49 FT. TO POB; AKA PAR A; & PAR COM 1303.50 FT N & 349.38 FT E OF W 1/4 COR: E 283.33 FT; S 973.50 FT; N51D17'31"W 378.19 FT; N28D37'38"E 33.52 FT; N 705.51 FT TO POB. AKA B; & PAR COM 857.32 FT E OF W 1/4 COR OF SEC: N 609.95

The Equalizer. Copyright (c) 1999 - 2009.
Licensed To: Township of Greenwood, County of Wexford, Michigan

Class: RESIDENTIAL-IMPROV Zoning:
School: MANTON CONSOLIDATED SCHOOLS
P.R.E. 0%
:
2024 Est TCV 114,433 TCV/TFA: 223.50

Building Permit(s)	Date	Number	Status

X Improved | Vacant

Public Improvements

- Dirt Road
- Gravel Road
- Paved Road
- Storm Sewer
- Sidewalk
- Water
- Sewer
- Electric
- Gas
- Curb
- Street Lights
- Standard Utilities
- Underground Utils.

Topography of Site

- Level
- Rolling
- Low
- High
- Landscaped
- Swamp
- Wooded
- Pond
- Waterfront
- Ravine
- Wetland
- Flood Plain

Who	When	What
GLA	07/10/2019	INSPECTION
GLA	07/10/2019	INSPECTION

Land Value Estimates for Land Table 4010.LAND VALUES

Description	Frontage	Depth	* Factors * Front	Depth	Rate	%Adj.	Reason	Value
ACREAGE			32.250	Acres	2,722	100		87,785
			32.25	Total Acres		Total Est. Land Value =		87,785

Year	Land Value	Building Value	Assessed Value	Board of Review	Tribunal/ Other	Taxable Value
2024	43,900	13,300	57,200			45,312C
2023	39,900	10,800	50,700			43,155C
2022	33,000	8,100	41,100			41,100S
2021	28,600	7,400	36,000			26,237C

*** Information herein deemed reliable but not guaranteed***

Building Type

	Single Family
	Mobile Home
	Town Home
	Duplex
	A-Frame
X	Wood Frame

Building Style: PLAIN

Yr Built	Remodeled
0	0

Condition: Very Poor

Room List

	Basement
	1st Floor
	2nd Floor
	Bedrooms

(1) Exterior

	Wood/Shingle		
X	Aluminum/Vinyl		
	Brick		
X	Insulation		

(2) Windows

X	Many	X	Large
	Avg.		Avg.
	Few		Small

	Wood Sash
	Metal Sash
X	Vinyl Sash
	Double Hung
	Horiz. Slide
	Casement
	Double Glass
	Patio Doors
X	Storms & Screens

(3) Roof

X	Gable		Gambrel
	Hip		Mansard
	Flat		Shed

X	Asphalt Shingle

Chimney:

(3) Roof (cont.)

	Eavestrough
X	Insulation
0	Front Overhang
0	Other Overhang

(4) Interior

X	Drywall		Plaster
	Paneled		Wood T&G

Trim & Decoration

	Ex	X	Ord		Min

Size of Closets

	Lg	X	Ord		Small

Doors:		Solid	X	H.C.	

(5) Floors

Kitchen:
Other: Linoleum
Other: Carpeted

(6) Ceilings

X	Drywall

(7) Excavation

Basement: 0 S.F.
Crawl: 0 S.F.
Slab: 0 S.F.
Height to Joists: 0.0

(8) Basement

	Conc. Block
	Poured Conc.
	Stone
	Treated Wood
	Concrete Floor

(9) Basement Finish

	Recreation SF
	Living SF
	Walkout Doors (B)
	No Floor SF
	Walkout Doors (A)

(10) Floor Support

Joists:
Unsupported Len:
Cntr.Sup:

(11) Heating/Cooling

X	Gas		Oil		Elec.
	Wood		Coal		Steam

	Forced Air w/o Ducts
	Forced Air w/ Ducts
	Forced Hot Water
	Electric Baseboard
	Elec. Ceil. Radiant
	Radiant (in-floor)
	Electric Wall Heat
	Space Heater
	Wall/Floor Furnace
	Forced Heat & Cool
	Heat Pump
X	No Heating/Cooling

	Central Air
	Wood Furnace

(12) Electric

150	Amps Service

No./Qual. of Fixtures

	Ex.	X	Ord.		Min

No. of Elec. Outlets

	Many	X	Ave.		Few

(13) Plumbing

	Average Fixture(s)
	3 Fixture Bath
	2 Fixture Bath
	Softener, Auto
	Softener, Manual
	Solar Water Heat
	No Plumbing
	Extra Toilet
	Extra Sink
	Separate Shower
	Ceramic Tile Floor
	Ceramic Tile Wains
	Ceramic Tub Alcove
	Vent Fan

(14) Water/Sewer

	Public Water
	Public Sewer
	Water Well
	1000 Gal Septic
	2000 Gal Septic

Lump Sum Items:

(15) Built-ins

	Appliance Allow.
	Cook Top
	Dishwasher
	Garbage Disposal
	Bath Heater
	Vent Fan
	Hot Tub
	Unvented Hood
	Vented Hood
	Intercom
	Jacuzzi Tub
	Jacuzzi repl.Tub
	Oven
	Microwave
	Standard Range
	Self Clean Range
	Sauna
	Trash Compactor
	Central Vacuum
	Security System

(15) Fireplaces

	Interior 1 Story
	Interior 2 Story
	2nd/Same Stack
	Two Sided
	Exterior 1 Story
	Exterior 2 Story
	Prefab 1 Story
	Prefab 2 Story
	Heat Circulator
	Raised Hearth
	Wood Stove
	Direct-Vented Gas

Class: D
Effec. Age: 59
Floor Area: 512
Total Base New : 46,115 E.C.F.
Total Depr Cost: 20,546 X 1.297
Estimated T.C.V: 26,648

(16) Porches/Decks

Area	Type
256	WPP

(17) Garage

Year Built:
Car Capacity:
Class:
Exterior:
Brick Ven.:
Stone Ven.:
Common Wall:
Foundation:
Finished ?:
Auto. Doors:
Mech. Doors:
Area:
% Good:
Storage Area:
No Conc. Floor:

Bsmnt Garage:

Carport Area:
Roof:

Cost Est. for Res. Bldg: 1 Recreation Cabin PLAIN Cls D Blt 0
(11) Heating System: No Heating/Cooling
Ground Area = 512 SF Floor Area = 512 SF.
Phy/Ab.Phy/Func/Econ/Comb. % Good=45/100/100/100/45
Building Areas

Description	Size	Cost New	Depr. Cost	
Other Additions/Adjustments				
Plumbing				
3 Fixture Bath	1	-3,268	-1,471	
Porches				
WPP	256	3,942	1,774	
Local Cost Items				
QUONSET BUILDING	560	5,141	2,108	*4
	Totals:	46,115	20,546	

Notes:

ECF (RESIDENTIAL) 1.297 => TCV: 26,648

*** Information herein deemed reliable but not guaranteed***

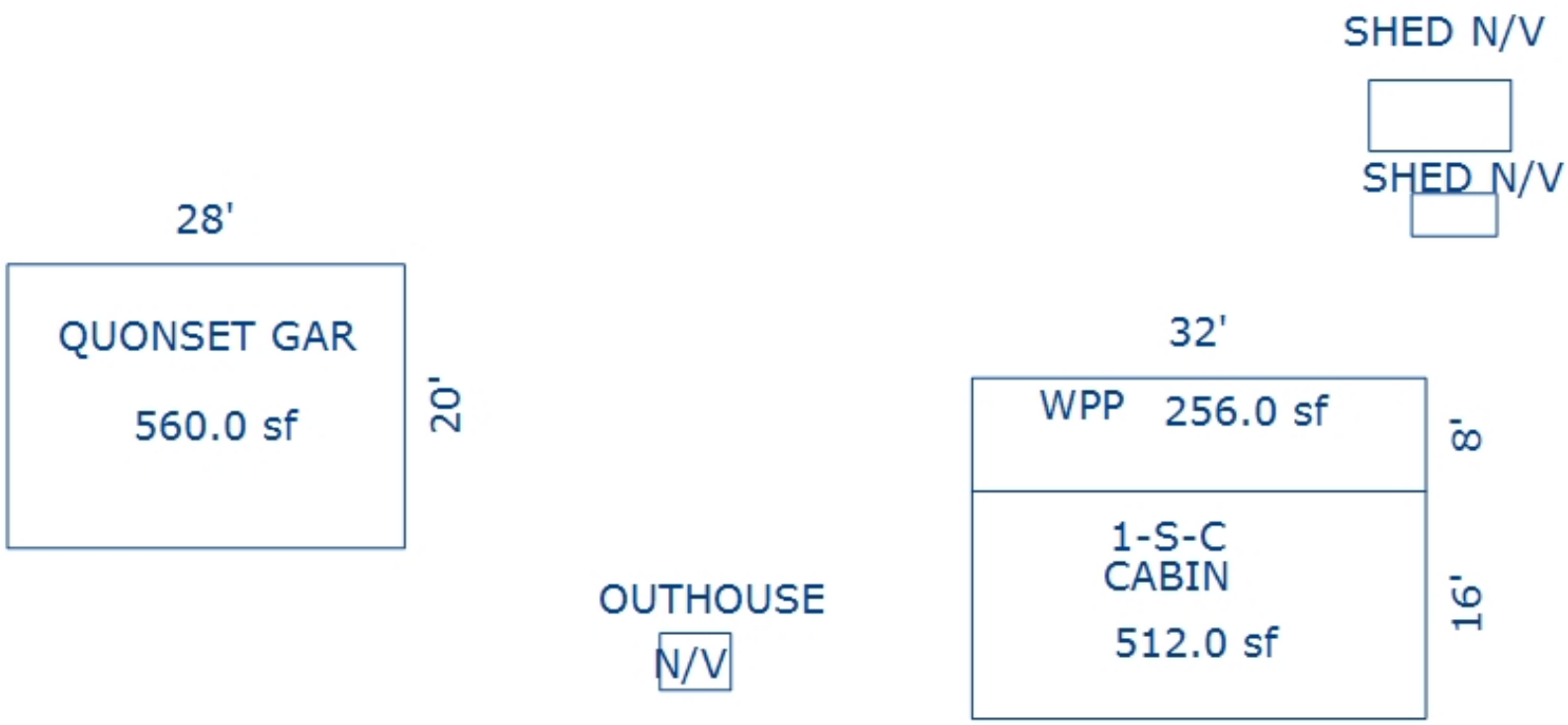

*** Information herein deemed reliable but not guaranteed***

Parcel Number: 2410-31-2305-01 Jurisdiction: GREENWOOD TWP County: WEXFORD Printed on 02/15/2024

Grantor	Grantee	Sale Price	Sale Date	Inst. Type	Terms of Sale	Liber & Page	Verified By	Prcnt. Trans.
THOMAS, JERROLD WADE	THOMAS, AARON OTTO	0	01/21/2021	WD	09-FAMILY	PTA	AGENT	0.0
THOMAS, JERROLD W & AARON	THOMAS, AARON	0	08/31/2018	QC	09-FAMILY	689/279	AGENT	0.0

Property Address

258 KOLARVIC RD

Owner's Name/Address

THOMAS, AARON OTTO
258 KOLARVIC RD
MANTON MI 49663

Tax Description

PARCEL D: PAR COM 1303.50 FT N & 1175.35 FT E OF W 1/4 COR; E 29.75 FT; S 54DEGREE43'02" E 366.96 FT; S 34DEG51'01" E 582.38 FT; W 903.15 FT; N 694.09 FT TO POB TOGETHER WIH ESMT FOR ACCESS & UTILITIES. & PARCEL E PAR COM AT W 1/4 COR, TH N 1313.50 FT & E 143510 FT E TO POB; E 821.64 FT, S 15DEG13'01" W 721.09 FT; N 34 REG51'01" W 582.38 FT N 54D43'02" W 366.96 FT TO POB & PARCEL F PER REG SURVEY L01 PG 486 '77 GW. SEC. 31 T24N R10W -MANTON- 21.90 AC M/L SPLIT/COMBINED ON 01/28/2020 FROM

The Equalizer. Copyright (c) 1999 - 2009.
Licensed To: Township of Greenwood, County of Wexford, Michigan

Class: RESIDENTIAL-IMPROV Zoning:
School: MANTON CONSOLIDATED SCHOOLS
P.R.E. 100% 02/15/2021
:
2024 Est TCV 163,280 TCV/TFA: 151.19

Building Permit(s)	Date	Number	Status

X Improved | Vacant

Public Improvements

- Dirt Road
- Gravel Road
- Paved Road
- Storm Sewer
- Sidewalk
- Water
- Sewer
- Electric
- Gas
- Curb
- Street Lights
- Standard Utilities
- Underground Utils.

Topography of Site

- Level
- Rolling
- Low
- High
- Landscaped
- Swamp
- Wooded
- Pond
- Waterfront
- Ravine
- Wetland
- Flood Plain

Who	When	What
GLA	07/10/2019	INSPECTION

Land Value Estimates for Land Table 4010.LAND VALUES

Description	Frontage	Depth	* Factors * Front	Depth	Rate	%Adj.	Reason	Value
ACREAGE			21.900 Acres		2,993	100		65,539
			21.90 Total Acres		Total Est. Land Value =			65,539

Year	Land Value	Building Value	Assessed Value	Board of Review	Tribunal/ Other	Taxable Value
2024	32,800	48,800	81,600			63,628C
2023	28,000	40,300	68,300			60,599C
2022	24,100	34,300	58,400			57,714C
2021	21,900	35,000	56,900			55,871C

*** Information herein deemed reliable but not guaranteed***

Building Type

X	Single Family
	Mobile Home
	Town Home
	Duplex
	A-Frame
X	Wood Frame

Building Style: CABIN

Yr Built	Remodeled
0	0

Condition: Fair

Room List

	Basement
1	1st Floor
	2nd Floor
	Bedrooms

(1) Exterior

X	Wood/Shingle
	Aluminum/Vinyl
	Brick
	Insulation

(2) Windows

X	Many Avg. Few	X	Large Avg. Small

	Wood Sash
	Metal Sash
	Vinyl Sash
X	Double Hung
	Horiz. Slide
	Casement
	Double Glass
	Patio Doors
X	Storms & Screens

(3) Roof

X	Gable		Gambrel
	Hip		Mansard
	Flat		Shed

X	Asphalt Shingle

Chimney:

(3) Roof (cont.)

	Eavestrough
	Insulation
0	Front Overhang
0	Other Overhang

(4) Interior

	Drywall Paneled		Plaster Wood T&G

Trim & Decoration

	Ex	X	Ord		Min

Size of Closets

	Lg	X	Ord		Small

Doors:		Solid	X	H.C.	

(5) Floors

Kitchen:
Other:
Other:

(6) Ceilings

(7) Excavation

Basement: 0 S.F.
Crawl: 0 S.F.
Slab: 320 S.F.
Height to Joists: 0.0

(8) Basement

	Conc. Block
	Poured Conc.
	Stone
	Treated Wood
	Concrete Floor

(9) Basement Finish

	Recreation SF
	Living SF
	Walkout Doors (B)
	No Floor SF
	Walkout Doors (A)

(10) Floor Support

Joists:
Unsupported Len:
Cntr.Sup:

(11) Heating/Cooling

X	Gas		Oil		Elec.
	Wood		Coal		Steam

	Forced Air w/o Ducts
	Forced Air w/ Ducts
	Forced Hot Water
	Electric Baseboard
	Elec. Ceil. Radiant
	Radiant (in-floor)
	Electric Wall Heat
X	Space Heater
	Wall/Floor Furnace
	Forced Heat & Cool
	Heat Pump
	No Heating/Cooling

	Central Air
	Wood Furnace

(12) Electric

0	Amps Service

No./Qual. of Fixtures

	Ex.	X	Ord.		Min

No. of Elec. Outlets

	Many	X	Ave.		Few

(13) Plumbing

	Average Fixture(s)
1	3 Fixture Bath
	2 Fixture Bath
	Softener, Auto
	Softener, Manual
	Solar Water Heat
	No Plumbing
	Extra Toilet
	Extra Sink
	Separate Shower
	Ceramic Tile Floor
	Ceramic Tile Wains
	Ceramic Tub Alcove
	Vent Fan

(14) Water/Sewer

	Public Water
	Public Sewer
	Water Well
	1000 Gal Septic
	2000 Gal Septic

Lump Sum Items:

(15) Built-ins

	Appliance Allow.
	Cook Top
	Dishwasher
	Garbage Disposal
	Bath Heater
	Vent Fan
	Hot Tub
	Unvented Hood
	Vented Hood
	Intercom
	Jacuzzi Tub
	Jacuzzi repl.Tub
	Oven
	Microwave
	Standard Range
	Self Clean Range
	Sauna
	Trash Compactor
	Central Vacuum
	Security System

(15) Fireplaces

	Interior 1 Story
	Interior 2 Story
	2nd/Same Stack
	Two Sided
	Exterior 1 Story
	Exterior 2 Story
	Prefab 1 Story
	Prefab 2 Story
	Heat Circulator
	Raised Hearth
	Wood Stove
	Direct-Vented Gas

Class: D
Effec. Age: 55
Floor Area: 1,080
Total Base New : 167,467 E.C.F.
Total Depr Cost: 75,359 X 1.297
Estimated T.C.V: 97,741

(16) Porches/Decks

Area	Type
308	CPP
72	WCP (1 Story)
120	Treated Wood
72	Treated Wood

(17) Garage

Year Built:
Car Capacity:
Class: CD
Exterior: Pole
Brick Ven.: 0
Stone Ven.: 0
Common Wall: Detache
Foundation: 18 Inch
Finished ?:
Auto. Doors: 0
Mech. Doors: 0
Area: 1200
% Good: 0
Storage Area: 0
No Conc. Floor: 0

Bsmnt Garage:

Carport Area: 96
Roof: Wood Shingle

Cost Est. for Res. Bldg: 1 Single Family CABIN Cls D Blt 0
(11) Heating System: Space Heater
Ground Area = 1080 SF Floor Area = 1080 SF.
Phy/Ab.Phy/Func/Econ/Comb. % Good=45/100/100/100/45
Building Areas

Stories	Exterior	Foundation	Size	Cost New	Depr. Cost
1 Story	Siding	Piers	640		
1 Story	Siding	Piers	120		
1 Story	Siding	Slab	320		
			Total:	109,007	49,053
Other Additions/Adjustments					
Porches					
CPP			308	3,927	1,767
WCP (1 Story)			72	3,262	1,468
Deck					
Treated Wood w/Roof (Deck Portion)			120	2,836	1,276
Treated Wood w/Roof (Roof portion)			120	1,801	810
Treated Wood w/Roof (Deck Portion)			72	2,062	928
Treated Wood w/Roof (Roof portion)			72	1,155	520
Garages					
Class: CD Exterior: Pole (Unfinished)					
Base Cost			1200	26,100	11,745
Carports					
Wood Shingle			96	1,500	675
Aluminum			480	6,005	2,702
Unit-in-Place Cost Items					
WOOD BURNING STOVE			1	7,100	3,195
Local Cost Items					
POLE LEANTO DIRT			480	1,776	799
SHED			24	187	84

<<<<< Calculations too long. See Valuation printout for complete pricing. >>>>>

*** Information herein deemed reliable but not guaranteed***

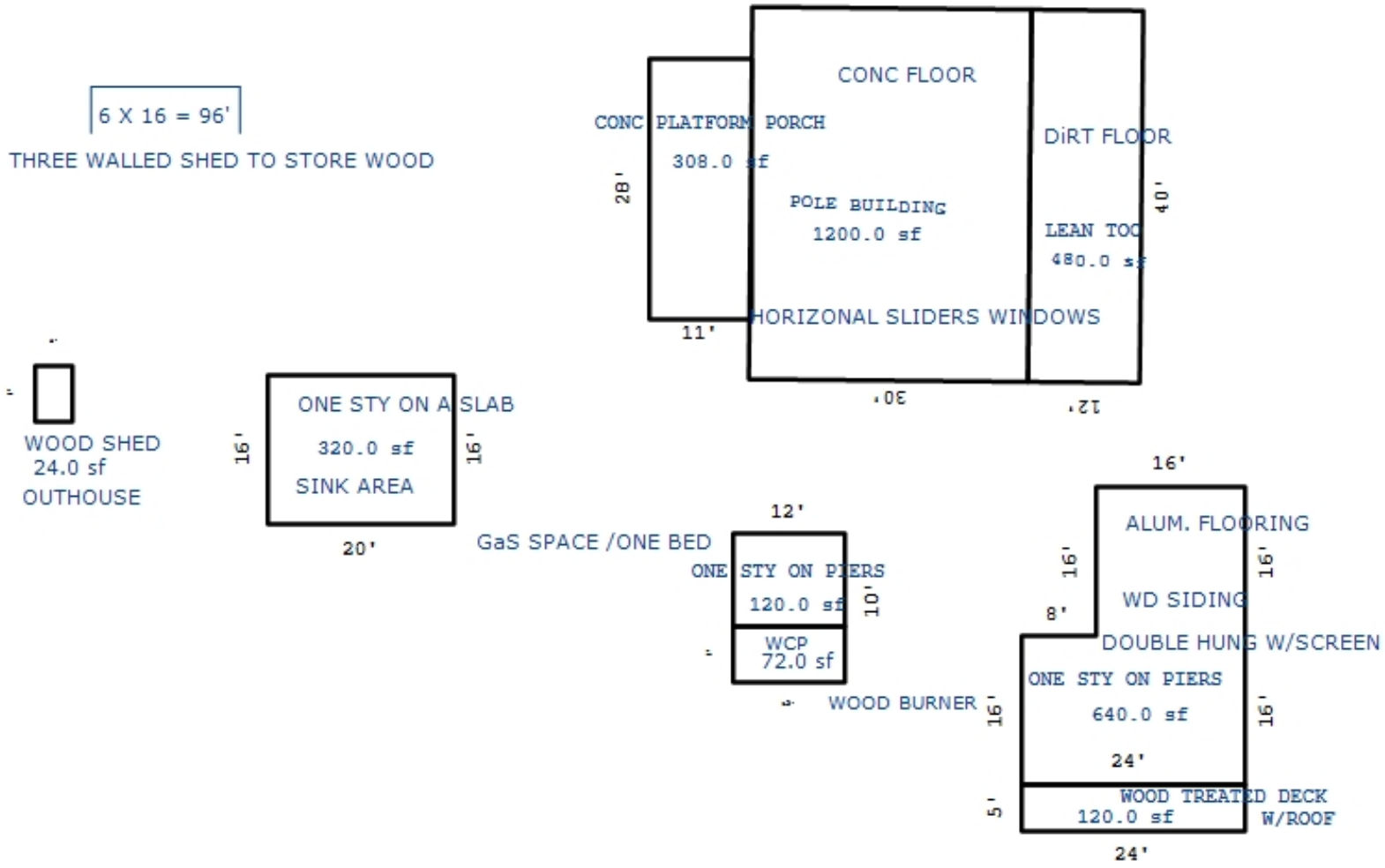

*** Information herein deemed reliable but not guaranteed***

Parcel Number: 2410-31-2308 Jurisdiction: GREENWOOD TWP County: WEXFORD Printed on 02/15/2024

Grantor	Grantee	Sale Price	Sale Date	Inst. Type	Terms of Sale	Liber & Page	Verified By	Prcnt. Trans.
STEINBRENNER, ROBERT & HEI	WILLHITE, LAWRENCE & ELIZA	7,000	10/26/2001	WD	03-ARM'S LENGTH	385:276	DEED	0.0
SMITH, DAVID M.	STEINBRENNER, ROBERT W. ET	5,200	08/01/1991	WD	03-ARM'S LENGTH	325:823	DEED	0.0

Property Address

6518 N 27 RD

Owner's Name/Address

WILLHITE, LAWRENCE J
& ELIZABETH J
14552 ALPENA
STERLING HEIGHTS MI 48313

Tax Description

PAR G; PAR COM 1578.63 FT E OF W 1/4 COR; N 609.95 FT; E 517.42 FT; S 34D51M01S E 496.49 FT; S 71D48M54S E 83.69 FT; S 174 FT; W 876.47 FT TO POB. SUB TO EASMT --10.18 A M/L-- GW SEC 31 T24N R10W -MANTON- [[ASSESSED W/ 31-1301 '00

Comments/Influences

Class: RESIDENTIAL-VACANT Zoning:

School: MANTON CONSOLIDATED SCHOOLS

P.R.E. 0%

:

2024 Est TCV 46,409

Building Permit(s)	Date	Number	Status
RESIDENTIAL - REMODEL	10/17/2002	PB11277	

	Improved	X	Vacant

Public Improvements

- Dirt Road
- Gravel Road
- Paved Road
- Storm Sewer
- Sidewalk
- Water
- Sewer
- Electric
- Gas
- Curb
- Street Lights
- Standard Utilities
- Underground Utils.

Topography of Site

- Level
- Rolling
- Low
- High
- Landscaped
- Swamp
- Wooded
- Pond
- Waterfront
- Ravine
- Wetland
- Flood Plain

Who	When	What
GLA	07/10/2019	INSPECTION
GLA	07/10/2019	INSPECTION

Land Value Estimates for Land Table 4010.LAND VALUES

Description	Frontage	Depth	* Factors * Front	Depth	Rate	%Adj.	Reason	Value
ACREAGE			10.180 Acres		4,559	100		46,409
			10.18 Total Acres		Total Est. Land Value =			46,409

Year	Land Value	Building Value	Assessed Value	Board of Review	Tribunal/ Other	Taxable Value
2024	23,200	0	23,200			11,294C
2023	13,200	0	13,200			10,757C
2022	12,200	0	12,200			10,245C
2021	12,200	0	12,200			9,918C

The Equalizer. Copyright (c) 1999 - 2009.
Licensed To: Township of Greenwood, County of Wexford, Michigan

*** Information herein deemed reliable but not guaranteed***

Parcel Number: 2410-31-2310 Jurisdiction: GREENWOOD TWP County: WEXFORD Printed on 02/15/2024

Grantor	Grantee	Sale Price	Sale Date	Inst. Type	Terms of Sale	Liber & Page	Verified By	Prcnt. Trans.
WIER, JON M & BARBARA BEER	WEIR, JON M & BARBARA BERE	0	03/24/2021	WD	18-LIFE ESTATE	690/671	DEED	0.0
SIMERSON, CALEB M &	WIER, JON M & BARBARA BEEI	22,000	12/13/2016	WD	03-ARM'S LENGTH	679 /121	DEED	100.0
BOETEFUER, THOMAS C & CHRI	SIMERSON, CALEB M &	35,000	05/22/2015	WD	19-MULTI PARCEL ARM'S LEN	675/918	DEED	100.0
BOETEFUER, THOMAS C.	SIMERSON, CALEB M. & TIMOT	35,000	05/21/2015	WD	03-ARM'S LENGTH		DEED	100.0

Property Address

Owner's Name/Address

WEIR, JON M & BARBARA BERRS WIER LE
873 HILLCREST RD
BOON MI 49618

Tax Description

PAR COM 1075.48 FT S & 553.64 FT E OF W 1/4 COR: N 1469.70 FT; S 51D17' 31" E 100FT; S 79D31'56" E 219.29 FT; S 1365.51 FT; W 334.66 FT TO POB TOG WITH ESMNT FOR ACCESS AKA PARCEL "I" PER REC SURVEY L01, PG 486 '77 10.11 A. M/L GW. SEC. 31 T24N R10W -MESICK-

Comments/Influences

Class: RESIDENTIAL-VACANT Zoning:

School: MESICK CONSOLIDATED SCH DIST

P.R.E. 0%

:

2024 Est TCV 46,386

Building Permit(s)	Date	Number	Status

Improved | X | Vacant

Public Improvements

- Dirt Road
- Gravel Road
- Paved Road
- Storm Sewer
- Sidewalk
- Water
- Sewer
- Electric
- Gas
- Curb
- Street Lights
- Standard Utilities
- Underground Utils.

Topography of Site

- Level
- Rolling
- Low
- High
- Landscaped
- Swamp
- Wooded
- Pond
- Waterfront
- Ravine
- Wetland
- Flood Plain

Land Value Estimates for Land Table 4010.LAND VALUES

Description	Frontage	Depth	* Factors * Front	Depth	Rate	%Adj.	Reason	Value
ACREAGE			10.110 Acres		4,588	100		46,386
			10.11 Total Acres		Total Est. Land Value =			46,386

Who	When	What
GLA	07/10/2019	INSPECTION
GLA	07/10/2019	INSPECTION

Year	Land Value	Building Value	Assessed Value	Board of Review	Tribunal/ Other	Taxable Value
2024	23,200	0	23,200			11,294C
2023	13,100	0	13,100			10,757C
2022	12,100	0	12,100			10,245C
2021	12,100	0	12,100			9,918C

The Equalizer. Copyright (c) 1999 - 2009. Licensed To: Township of Greenwood, County of Wexford, Michigan

*** Information herein deemed reliable but not guaranteed***

Parcel Number: 2410-31-2312 Jurisdiction: GREENWOOD TWP County: WEXFORD Printed on 02/15/2024

Grantor	Grantee	Sale Price	Sale Date	Inst. Type	Terms of Sale	Liber & Page	Verified By	Prcnt. Trans.
WIER, JON M & BARBARA BEER	WEIR, JON M & BARBARA BERF	0	03/24/2021	WD	18-LIFE ESTATE	690/671	DEED	0.0
SIMERSON, CALEB M &	WIER, JON M & BARBARA BEEF	22,000	12/13/2016	WD	03-ARM'S LENGTH	679 / 121	DEED	100.0
BOETEFUER, THOMAS C & CHRI	SIMERSON, CALEB M &	0	05/22/2015	WD	20-MULTI PARCEL SALE REF	675/918	DEED	100.0
BOETEFUER, THOMAS	SIMERSON, CALEB M. & TIMOT	35,000	05/21/2015	WD	03-ARM'S LENGTH		DEED	100.0

Property Address

Owner's Name/Address

WEIR, JON M & BARBARA BERRS WIER LE
873 HILLCREST RD
BOON MI 49618

Tax Description

PARCEL "J" DESC AS COM AT W 1/4 COR OF SEC; TH S 1075.48 FT; E 264.74 FT TO POB: TH N 1668.23 FT; S 71D27'23" E 72.43 FT; TH S 51D17'31" E 278.19 FT; S 1469.70 FT; W 288.90 FT TO POB. TOG WITH & SUB TO EASMT -10.49 A M/L- GW. SEC. 31 T24N R10W -MANTON-

Comments/Influences

Class: RESIDENTIAL-VACANT Zoning:

School: MANTON CONSOLIDATED SCHOOLS

P.R.E. 0%

:

2024 Est TCV 46,512

Building Permit(s)	Date	Number	Status

[ ] Improved [X] Vacant

Public Improvements

- [ ] Dirt Road
- [ ] Gravel Road
- [ ] Paved Road
- [ ] Storm Sewer
- [ ] Sidewalk
- [ ] Water
- [ ] Sewer
- [ ] Electric
- [ ] Gas
- [ ] Curb
- [ ] Street Lights
- [ ] Standard Utilities
- [ ] Underground Utils.

Topography of Site

- [ ] Level
- [ ] Rolling
- [ ] Low
- [ ] High
- [ ] Landscaped
- [ ] Swamp
- [ ] Wooded
- [ ] Pond
- [ ] Waterfront
- [ ] Ravine
- [ ] Wetland
- [ ] Flood Plain

Who	When	What
GLA	07/10/2019	INSPECTION
GLA	07/10/2019	INSPECTION

Land Value Estimates for Land Table 4010.LAND VALUES

Description	Frontage	Depth	* Factors * Front	Depth	Rate	%Adj.	Reason	Value
ACREAGE			10.490	Acres	4,434	100		46,512
			10.49	Total Acres			Total Est. Land Value =	46,512

Year	Land Value	Building Value	Assessed Value	Board of Review	Tribunal/ Other	Taxable Value
2024	23,300	0	23,300			11,648C
2023	13,600	0	13,600			11,094C
2022	12,500	0	12,500			10,566C
2021	12,600	0	12,600			10,229C

The Equalizer. Copyright (c) 1999 - 2009. Licensed To: Township of Greenwood, County of Wexford, Michigan

*** Information herein deemed reliable but not guaranteed***

Parcel Number: 2410-31-2313 Jurisdiction: GREENWOOD TWP County: WEXFORD Printed on 02/15/2024

Grantor	Grantee	Sale Price	Sale Date	Inst. Type	Terms of Sale	Liber & Page	Verified By	Prcnt. Trans.
WIER, JON M & BARBARA B	WIER, JON M & BARBARA B LE	0	03/24/2021	WD	18-LIFE ESTATE	690/672	DEED	0.0
YOUTH WITH A MISSION TRAVE	WIER, JON M & BARBARA B	13,000	05/11/2018	WD	03-ARM'S LENGTH	6821/942	DEED	100.0
FALL, ARTHUR E.	YOUTH WITH A MISSION TRAVE	0	03/15/2018	WD	21-NOT USED/OTHER	382/343	DEED	100.0

Property Address

Owner's Name/Address

WIER, JON M & BARBARA B LE
873 HILLCREST RD
BOON MI 49618

Tax Description

PAR COM AT W 1/4 COR OF SEC: N 740.01 FT; S 54D31'23" E 188.32 FT; S 71D27' 23" E 115 FT; S 1668.23 FT; W 264.74 FT N 1075.48 FT TO POB TOG WITH ESMNT FOR ACCESS & UTILITIES AKA PARCEL "K" PER REG SURVEY L01, PG 486 '77 10.51 A. M/L GW. SEC. 31 T24N R10W -MESICK-

Comments/Influences

Class: RESIDENTIAL-VACANT Zoning:

School: MESICK CONSOLIDATED SCH DIST

P.R.E. 0%

:

2024 Est TCV 46,518

Building Permit(s)	Date	Number	Status

[ ] Improved [X] Vacant

Public Improvements

- [ ] Dirt Road
- [ ] Gravel Road
- [ ] Paved Road
- [ ] Storm Sewer
- [ ] Sidewalk
- [ ] Water
- [ ] Sewer
- [ ] Electric
- [ ] Gas
- [ ] Curb
- [ ] Street Lights
- [ ] Standard Utilities
- [ ] Underground Utils.

Topography of Site

- [ ] Level
- [ ] Rolling
- [ ] Low
- [ ] High
- [ ] Landscaped
- [ ] Swamp
- [ ] Wooded
- [ ] Pond
- [ ] Waterfront
- [ ] Ravine
- [ ] Wetland
- [ ] Flood Plain

Who	When	What
GLA	07/10/2019	INSPECTION
GLA	07/10/2019	INSPECTION

Land Value Estimates for Land Table 4010.LAND VALUES

Description	Frontage	Depth	* Factors * Front	Depth	Rate	%Adj.	Reason	Value
ACREAGE			10.510 Acres		4,426	100		46,518
			10.51 Total Acres		Total Est. Land Value =			46,518

Year	Land Value	Building Value	Assessed Value	Board of Review	Tribunal/ Other	Taxable Value
2024	23,300	0	23,300			11,648C
2023	13,700	0	13,700			11,094C
2022	12,500	0	12,500			10,566C
2021	12,600	0	12,600			10,229C

The Equalizer. Copyright (c) 1999 - 2009. Licensed To: Township of Greenwood, County of Wexford, Michigan

*** Information herein deemed reliable but not guaranteed***

Parcel Number: 2410-31-3101-01 Jurisdiction: GREENWOOD TWP County: WEXFORD Printed on 02/15/2024

Grantor	Grantee	Sale Price	Sale Date	Inst. Type	Terms of Sale	Liber & Page	Verified By	Prcnt. Trans.
LEASK, ROGER	HADDON, DALE J & CAROL A T	165,000	12/29/2016	WD	03-ARM'S LENGTH	6791/311	DEED	100.0
WINDOVER, WESTLEY J	LEASK, ROGER	127,900	11/14/2012	WD	03-ARM'S LENGTH	653/1585	DEED	0.0
WINDOVER, WESTLEY & JESSIC	WINDOVER, WESTLEY J	0	04/13/2010	QC	06-COURT JUDGEMENT	629/1840	DEED	0.0
DRAPER, RICHARD E & JENNIF	WINDOVER, WESTLEY & JESSIC	0	05/25/2007	QC	21-NOT USED/OTHER	601/2864	DEED	0.0

Property Address

469 E 14 RD

Owner's Name/Address

HADDON, DALE J & CAROL A TRUST
9860 EDGEWOOD AVE
TRAVERSE CITY MI 49685

Tax Description

PAR B; BEG AT S 1/4 COR OF SEC: W 474.32 FT; N 218 FT; W 180 FT;S 218 FT; W 324.32 FT; N 660.08 FT; W 634.47 FT; S 660 FT; W 19.19 FT; N 2607.96 FT; E 1642.01 FT; E 80 FT; S 2280.23 FT; W 15 FT; S 330.06 FT TO POB. GW. SEC. 31 T24N R10W -MESICK- [[ASSESSED W/ 31-3201 '05 [[ASSESSED W/ 31-3102 '05 SPLIT ON 07/03/2007 FROM 2410-31-3101, 2410-31-3302;

Comments/Influences

Default Comments
SPLIT/COMB. ON 07/03/2007 COMPLETED

The Equalizer. Copyright (c) 1999 - 2009.
Licensed To: Township of Greenwood, County of Wexford, Michigan

Class: AGRICULTURAL-IMPRO Zoning:

School: MESICK CONSOLIDATED SCH DIST

P.R.E. 100% 02/14/2017 Qual. Ag.

:

2024 Est TCV 500,133 TCV/TFA: 238.16

Building Permit(s)	Date	Number	Status
Deck	05/23/2018	PB18--0076	COMPLETE
RESIDENTIAL - NEW	07/31/2017	PB17-0140	ENTERED

X Improved | Vacant

	Public Improvements
	Dirt Road
X	Gravel Road
	Paved Road
	Storm Sewer
	Sidewalk
	Water
	Sewer
X	Electric
	Gas
	Curb
	Street Lights
	Standard Utilities
	Underground Utils.

	Topography of Site
	Level
X	Rolling
	Low
	High
	Landscaped
	Swamp
X	Wooded
	Pond
	Waterfront
	Ravine
	Wetland
	Flood Plain
X	OPEN

Who	When	What
GLA	05/13/2021	INSPECTION
GLA	07/10/2019	INSPECTION
GLA	07/10/2019	INSPECTION

Land Value Estimates for Land Table 1010.AG

Description	Frontage	Depth	* Factors * Front	Depth	Rate	%Adj.	Reason	Value
AG LAND	80 ACRES		88.43 Acres		2690	100		237,877
AG LAND	ROW		0.66 Acres		0	100		0
			89.09 Total Acres				Total Est. Land Value =	237,877

Land Improvement Cost Estimates

Description	Rate	Size	% Good	Cash Value
D/W/P: 3.5 Concrete	6.19	466	80	2,308
Total Estimated Land Improvements True Cash Value =				2,308

Year	Land Value	Building Value	Assessed Value	Board of Review	Tribunal/ Other	Taxable Value
2024	118,900	131,200	250,100			197,237C
2023	88,400	119,400	207,800			187,845C
2022	79,600	99,300	178,900			178,900S
2021	75,200	117,600	192,800			176,368C

*** Information herein deemed reliable but not guaranteed***

Building Type

X	Single Family
	Mobile Home
	Town Home
	Duplex
	A-Frame
X	Wood Frame

Building Style: PLAIN

Yr Built	Remodeled
2018	0

Condition: Good

Room List

	Basement
	1st Floor
	2nd Floor
	Bedrooms

(1) Exterior

X	Wood/Shingle
	Aluminum/Vinyl
	Brick
X	Insulation

(2) Windows

X	Many		Large
	Avg.	X	Avg.
	Few		Small

	Wood Sash
	Metal Sash
X	Vinyl Sash
	Double Hung
	Horiz. Slide
	Casement
	Double Glass
	Patio Doors
X	Storms & Screens

(3) Roof

X	Gable		Gambrel
	Hip		Mansard
	Flat		Shed

X	Asphalt Shingle

Chimney:

(3) Roof (cont.)

	Eavestrough
X	Insulation
0	Front Overhang
0	Other Overhang

(4) Interior

X	Drywall		Plaster
	Paneled		Wood T&G

Trim & Decoration

	Ex	X	Ord		Min

Size of Closets

	Lg	X	Ord		Small

Doors:		Solid	X	H.C.	

(5) Floors

Kitchen:
Other: Linoleum
Other: Carpeted

(6) Ceilings

X	Drywall		

(7) Excavation

Basement: 0 S.F.
Crawl: 1680 S.F.
Slab: 0 S.F.
Height to Joists: 0.0

(8) Basement

	Conc. Block
	Poured Conc.
	Stone
	Treated Wood
	Concrete Floor

(9) Basement Finish

	Recreation SF
	Living SF
	Walkout Doors (B)
	No Floor SF
	Walkout Doors (A)

(10) Floor Support

Joists:
Unsupported Len:
Cntr.Sup:

(11) Heating/Cooling

X	Gas		Oil		Elec.
	Wood		Coal		Steam

	Forced Air w/o Ducts
	Forced Air w/ Ducts
	Forced Hot Water
	Electric Baseboard
	Elec. Ceil. Radiant
	Radiant (in-floor)
	Electric Wall Heat
	Space Heater
	Wall/Floor Furnace
X	Forced Heat & Cool
	Heat Pump
	No Heating/Cooling

	Central Air
	Wood Furnace

(12) Electric

150	Amps Service

No./Qual. of Fixtures

	Ex.	X	Ord.		Min

No. of Elec. Outlets

	Many	X	Ave.		Few

(13) Plumbing

	Average Fixture(s)
1	3 Fixture Bath
	2 Fixture Bath
	Softener, Auto
	Softener, Manual
	Solar Water Heat
	No Plumbing
	Extra Toilet
	Extra Sink
	Separate Shower
	Ceramic Tile Floor
	Ceramic Tile Wains
	Ceramic Tub Alcove
	Vent Fan

(14) Water/Sewer

	Public Water
	Public Sewer
1	Water Well
1	1000 Gal Septic
	2000 Gal Septic

Lump Sum Items:

(15) Built-ins

	Appliance Allow.
	Cook Top
	Dishwasher
	Garbage Disposal
	Bath Heater
	Vent Fan
	Hot Tub
	Unvented Hood
	Vented Hood
	Intercom
	Jacuzzi Tub
	Jacuzzi repl.Tub
	Oven
	Microwave
	Standard Range
	Self Clean Range
	Sauna
	Trash Compactor
	Central Vacuum
	Security System

(15) Fireplaces

	Interior 1 Story
	Interior 2 Story
	2nd/Same Stack
	Two Sided
	Exterior 1 Story
	Exterior 2 Story
	Prefab 1 Story
	Prefab 2 Story
	Heat Circulator
	Raised Hearth
	Wood Stove
	Direct-Vented Gas

Class: C
Effec. Age: 7
Floor Area: 2,100
Total Base New : 279,907 E.C.F.
Total Depr Cost: 260,314 X 0.946
Estimated T.C.V: 246,257

(16) Porches/Decks

Area	Type
144	WSEP (1 Story)
20	Composite
360	Composite

(17) Garage

Year Built:
Car Capacity:
Class:
Exterior:
Brick Ven.:
Stone Ven.:
Common Wall:
Foundation:
Finished ?:
Auto. Doors:
Mech. Doors:
Area:
% Good:
Storage Area:
No Conc. Floor:

Bsmnt Garage:

Carport Area:
Roof:

Cost Est. for Res. Bldg: 1 Single Family PLAIN Cls C Blt 2018
(11) Heating System: Forced Heat & Cool
Ground Area = 1680 SF Floor Area = 2100 SF.
Phy/Ab.Phy/Func/Econ/Comb. % Good=93/100/100/100/93
Building Areas

Stories	Exterior	Foundation	Size	Cost New	Depr. Cost
1.25 Story	Siding	Crawl Space	1,680		
			Total:	253,715	235,955
Other Additions/Adjustments					
Water/Sewer					
1000 Gal Septic			1	4,899	4,556
Water Well, 100 Feet			1	5,849	5,440
Porches					
WSEP (1 Story)			144	7,988	7,429
Deck					
Composite			20	1,012	941
Composite			360	6,444	5,993
			Totals:	279,907	260,314

Notes:

ECF (AG) 0.946 => TCV: 246,257

*** Information herein deemed reliable but not guaranteed***

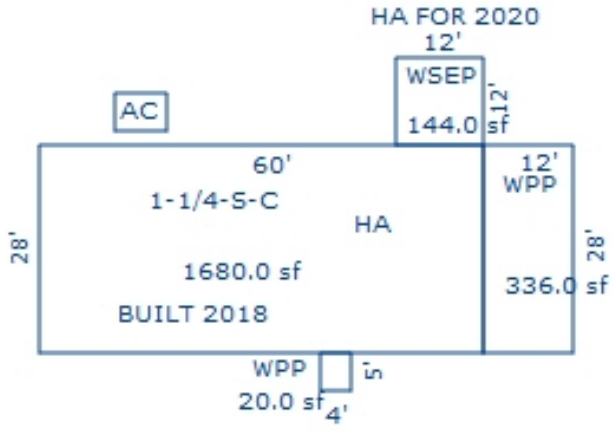

Sketch by Apex Sketch

*** Information herein deemed reliable but not guaranteed***

Building Type	Farm Implement/Equipment				
Year Built	2007				
Class/Construction	D,Pole				
Quality/Exterior	Average				
# of Walls, Perimeter	4 Wall, 208				
Height	12				
Heating System	No Heating/Cooling				
Length/Width/Area	72 x 32 = 2304				
Cost New	$ 25,390				
Phy./Func./Econ. %Good	57/100/100 57.0				
Depreciated Cost	$ 14,472				
+ Unit-In-Place Items	$ 0				
Description, Size X Rate X %Good = Cost Itemized -> Unit-In-Place -> Items ->					
E.C.F.	X 0.946				
% Good	57				
Est. True Cash Value	$ 13,691				
Comments:					
Total Estimated True Cash Value of Agricultural Improvements / This Card: 13691 / All Cards: 13691					

*** Information herein deemed reliable but not guaranteed***

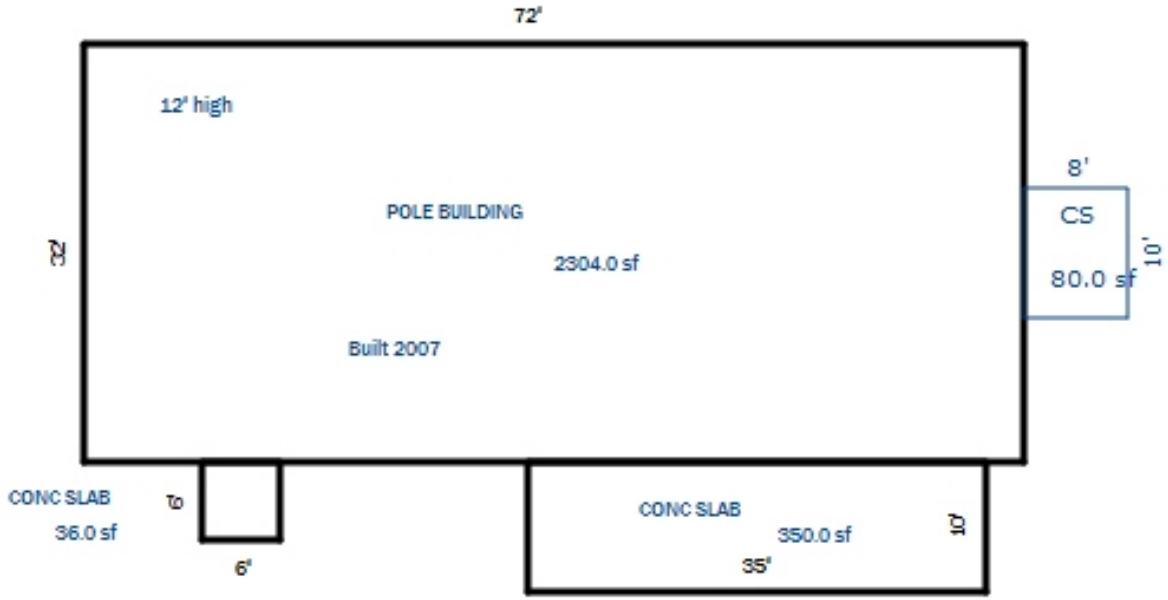

Sketch by Apex Sketch

*** Information herein deemed reliable but not guaranteed***

Parcel Number: 2410-31-3201 Jurisdiction: GREENWOOD TWP County: WEXFORD Printed on 02/15/2024

Grantor	Grantee	Sale Price	Sale Date	Inst. Type	Terms of Sale	Liber & Page	Verified By	Prcnt. Trans.
BASSETT, JUSTIN	BROOKS, NANCY J	80,000	06/25/2013	WD	03-ARM'S LENGTH	660/1622	DEED	100.0
FOREMAN, JESSICA	BASSETT, JUSTIN	0	10/09/2008	QC	06-COURT JUDGEMENT	639/2854	DEED	0.0
WINDOVER, WESTLEY	BASSETT, JUSTIN & JESSICA	85,000	03/15/2005	WD	03-ARM'S LENGTH	569:1242	DEED	0.0
WOOD, DALLAS & MARILYN	WINDOVER, WESTLEY & JESSIC	260,000	09/21/2004	WD	03-ARM'S LENGTH	562:1	DEED	0.0

Property Address

219 E 14 RD

Owner's Name/Address

BROOKS, NANCY J
343 E MAIN ST
GAYLORD MI 49735

Tax Description

COM AT SW COR OF SEC; E 932.4 FT TO POB: N 660 FT; E 634.47 FT; S 660.08 FT; W 640.81 FT TO POB. --9.66 A M/L-- GW SEC 31 T24N R10W -MESICK- [[ASSESSED W/31-3101 '98 [[ASSESSED W/ 31-3101 '05

Comments/Influences

The Equalizer. Copyright (c) 1999 - 2009. Licensed To: Township of Greenwood, County of Wexford, Michigan

Class: RESIDENTIAL-IMPROV Zoning:

School: MESICK CONSOLIDATED SCH DIST

P.R.E. 0%

:

2024 Est TCV 163,532 (100 MCL 211.27)

Building Permit(s)	Date	Number	Status

X Improved | | Vacant

Public Improvements

- Dirt Road
- Gravel Road
- Paved Road
- Storm Sewer
- Sidewalk
- Water
- Sewer
- Electric
- Gas
- Curb
- Street Lights
- Standard Utilities
- Underground Utils.

Topography of Site

- Level
- Rolling
- Low
- High
- Landscaped
- Swamp
- Wooded
- Pond
- Waterfront
- Ravine
- Wetland
- Flood Plain

Who	When	What
GLA	07/10/2019	INSPECTION
GLA	07/10/2019	INSPECTION

Land Value Estimates for Land Table 4010.LAND VALUES

Description	Frontage	Depth	* Factors * Front	Depth	Rate	%Adj.	Reason	Value
ACREAGE			9.173 Acres		4,735	100		43,437
ROW			0.487 Acres		0	100		0
			9.66 Total Acres		Total Est. Land Value =			43,437

Land Improvement Cost Estimates

Description	Rate	Size	% Good	Cash Value
D/W/P: 3.5 Concrete	5.82	96	45	252
Wood Frame	20.48	176	45	1,622
Total Estimated Land Improvements True Cash Value =				1,874

Year	Land Value	Building Value	Assessed Value	Board of Review	Tribunal/ Other	Taxable Value
2024	21,700	60,100	81,800			49,332C
2023	12,700	49,600	62,300			46,983C
2022	11,600	42,200	53,800			44,746C
2021	12,000	43,200	55,200			43,317C

*** Information herein deemed reliable but not guaranteed***

Building Type

X	Single Family
	Mobile Home
	Town Home
	Duplex
	A-Frame
X	Wood Frame

Building Style: PLAIN

Yr Built	Remodeled
0	0

Condition: Good

Room List

	Basement
	1st Floor
	2nd Floor
	Bedrooms

(1) Exterior

	Wood/Shingle
X	Aluminum/Vinyl
	Brick
X	Insulation

(2) Windows

	Many		Large
X	Avg.	X	Avg.
	Few		Small

	Wood Sash
	Metal Sash
X	Vinyl Sash
	Double Hung
	Horiz. Slide
	Casement
	Double Glass
	Patio Doors
X	Storms & Screens

(3) Roof

X	Gable		Gambrel
	Hip		Mansard
	Flat		Shed

X	Asphalt Shingle

Chimney:

(3) Roof (cont.)

	Eavestrough
X	Insulation
0	Front Overhang
0	Other Overhang

(4) Interior

X	Drywall		Plaster
	Paneled		Wood T&G

Trim & Decoration

	Ex	X	Ord		Min

Size of Closets

	Lg	X	Ord		Small

Doors:		Solid	X	H.C.	

(5) Floors

Kitchen:
Other: Linoleum
Other: Carpeted

(6) Ceilings

X	Drywall		

(7) Excavation

Basement: 840 S.F.
Crawl: 0 S.F.
Slab: 0 S.F.
Height to Joists: 0.0

(8) Basement

	Conc. Block
	Poured Conc.
	Stone
	Treated Wood
	Concrete Floor

(9) Basement Finish

	Recreation SF
	Living SF
	Walkout Doors (B)
	No Floor SF
	Walkout Doors (A)

(10) Floor Support

Joists:
Unsupported Len:
Cntr.Sup:

(11) Heating/Cooling

X	Gas		Oil		Elec.
	Wood		Coal		Steam

	Forced Air w/o Ducts
X	Forced Air w/ Ducts
	Forced Hot Water
	Electric Baseboard
	Elec. Ceil. Radiant
	Radiant (in-floor)
	Electric Wall Heat
	Space Heater
	Wall/Floor Furnace
	Forced Heat & Cool
	Heat Pump
	No Heating/Cooling

	Central Air
	Wood Furnace

(12) Electric

150	Amps Service

No./Qual. of Fixtures

	Ex.	X	Ord.		Min

No. of Elec. Outlets

	Many	X	Ave.		Few

(13) Plumbing

1	Average Fixture(s)
	3 Fixture Bath
	2 Fixture Bath
	Softener, Auto
	Softener, Manual
	Solar Water Heat
	No Plumbing
	Extra Toilet
	Extra Sink
	Separate Shower
	Ceramic Tile Floor
	Ceramic Tile Wains
	Ceramic Tub Alcove
	Vent Fan

(14) Water/Sewer

	Public Water
	Public Sewer
1	Water Well
1	1000 Gal Septic
	2000 Gal Septic

Lump Sum Items:

(15) Built-ins

	Appliance Allow.
	Cook Top
	Dishwasher
	Garbage Disposal
	Bath Heater
	Vent Fan
	Hot Tub
	Unvented Hood
	Vented Hood
	Intercom
	Jacuzzi Tub
	Jacuzzi repl.Tub
	Oven
	Microwave
	Standard Range
	Self Clean Range
	Sauna
	Trash Compactor
	Central Vacuum
	Security System

(15) Fireplaces

	Interior 1 Story
	Interior 2 Story
	2nd/Same Stack
	Two Sided
	Exterior 1 Story
	Exterior 2 Story
	Prefab 1 Story
	Prefab 2 Story
	Heat Circulator
	Raised Hearth
	Wood Stove
	Direct-Vented Gas

Class: D
Effec. Age: 55
Floor Area: 840
Total Base New : 198,515 E.C.F.
Total Depr Cost: 89,331 X 1.297
Estimated T.C.V: 115,862

(16) Porches/Decks

Area	Type
168	WGEP (1 Story)
32	CCP (1 Story)
120	Brzwy, FW

(17) Garage

Year Built: 1964
Car Capacity:
Class: D
Exterior: Pole
Brick Ven.: 0
Stone Ven.: 0
Common Wall: Detache
Foundation: 18 Inch
Finished ?:
Auto. Doors: 0
Mech. Doors: 0
Area: 960
% Good: 0
Storage Area: 0
No Conc. Floor: 0

Bsmnt Garage:

Carport Area:
Roof:

Cost Est. for Res. Bldg: 1 Single Family PLAIN Cls D Blt 0
(11) Heating System: Forced Air w/ Ducts
Ground Area = 840 SF Floor Area = 840 SF.
Phy/Ab.Phy/Func/Econ/Comb. % Good=45/100/100/100/45
Building Areas

Stories	Exterior	Foundation	Size	Cost New	Depr. Cost
1+ Story	Siding	Basement	840		
			Total:	112,298	50,534
Other Additions/Adjustments					
Water/Sewer					
1000 Gal Septic			1	4,293	1,932
Water Well, 100 Feet			1	5,545	2,495
Porches					
WGEP (1 Story)			168	11,364	5,114
CCP (1 Story)			32	898	404
Garages					
Class: D Exterior: Pole (Unfinished)					
Base Cost			960	19,334	8,700
Class: D Exterior: Siding Foundation: 18 Inch (Unfinished)					
Base Cost			968	25,952	11,678
Common Wall: 2 Wall			1	-3,714	-1,671
Class: D Exterior: Pole (Unfinished)					
Base Cost			768	16,143	7,264
Breezeways					
Frame Wall			120	6,402	2,881
			Totals:	198,515	89,331

Notes:
ECF (RESIDENTIAL) 1.297 => TCV: 115,862

*** Information herein deemed reliable but not guaranteed***

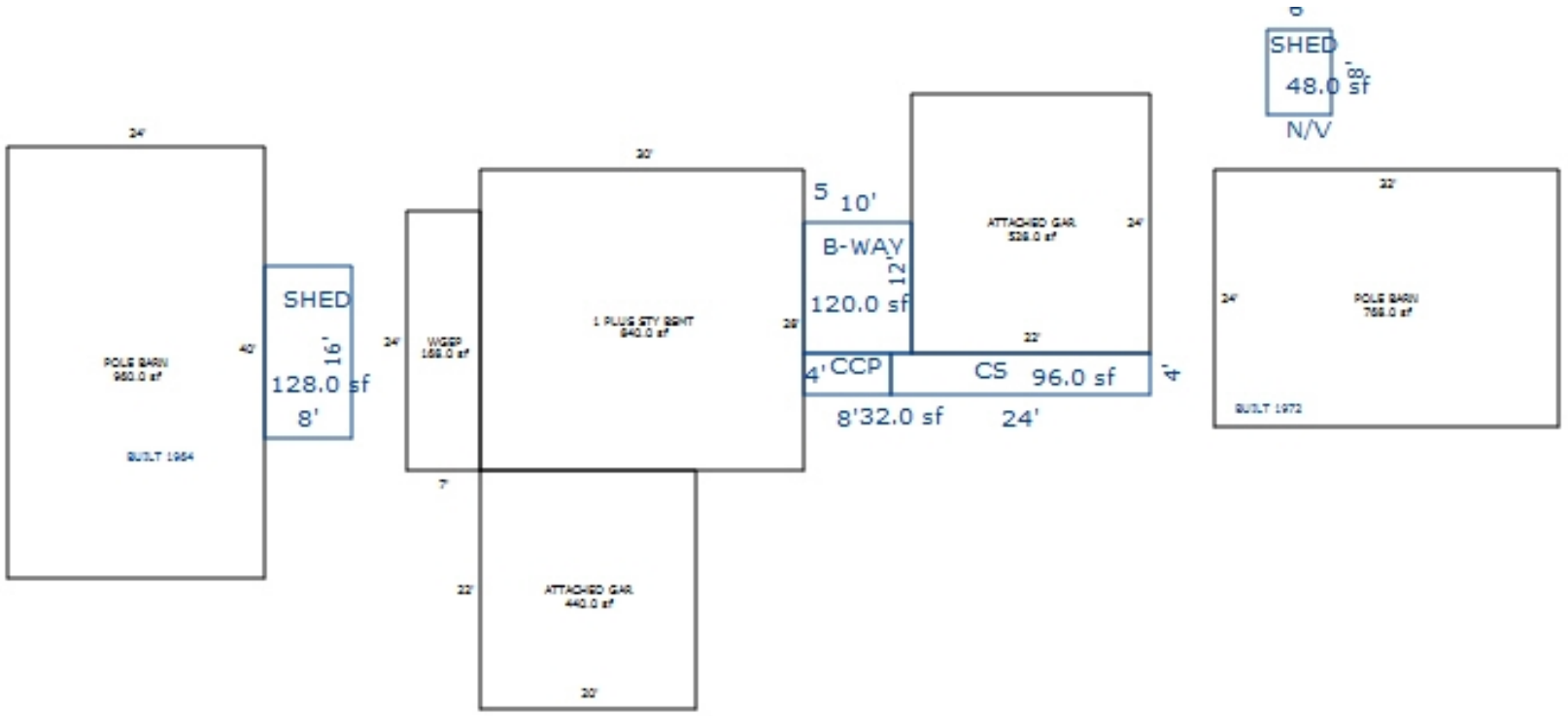

Sketch by Apex Sketch

*** Information herein deemed reliable but not guaranteed***

Building Type	Barn - General Purpose				
Year Built					
Class/Construction	D,Frame				
Quality/Exterior	Low Cost				
# of Walls, Perimeter	4 Wall, 240				
Height	18				
Heating System	No Heating/Cooling				
Length/Width/Area	(L or Odd Shaped) 3120				
Cost New	$ 86,642				
Phy./Func./Econ. %Good	60/20/50 6.0				
Depreciated Cost	$ 2,599				
+ Unit-In-Place Items	$ 0				
Description, Size X Rate X %Good = Cost Itemized -> Unit-In-Place -> Items ->					
E.C.F.	X 0.946				
% Good	60				
Est. True Cash Value	$ 2,459				
Comments:					
Total Estimated True Cash Value of Agricultural Improvements / This Card: 2459 / All Cards: 2459					

*** Information herein deemed reliable but not guaranteed***

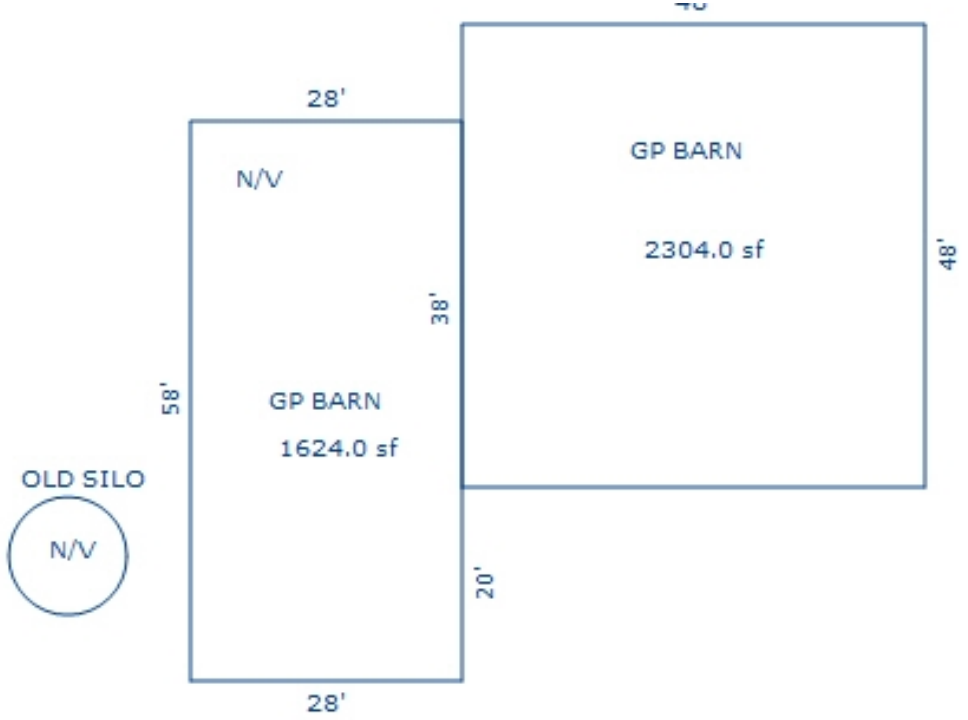

Sketch by Apex Sketch

*** Information herein deemed reliable but not guaranteed***

Parcel Number: 2410-31-3301 Jurisdiction: GREENWOOD TWP County: WEXFORD Printed on 02/15/2024

Grantor	Grantee	Sale Price	Sale Date	Inst. Type	Terms of Sale	Liber & Page	Verified By	Prcnt. Trans.
JPMORGAN CHASE BANK	SHEPARDSON, REUBEN C	79,900	01/17/2014	WD	11-FROM LENDING INSTITUTI	665/900	DEED	100.0
HUTCHINSON, MATTHEW C	JPMORGAN CHASE BANK	0	03/29/2013	SD	10-FORECLOSURE	657/2362	DEED	0.0
KISH, HENRY & LAURA	HUTCHINSON, MATTHEW & HEAT	145,700	08/24/2005	WD	03-ARM'S LENGTH	576:2528	DEED	0.0
SHOEBRIDGE ET AL, MARLENE	KISH, HENRY & LAURA	109,900	04/27/2000	WD	03-ARM'S LENGTH	373:813	DEED	0.0

Property Address

11 E 14 RD

Owner's Name/Address

SHEPARDSON, REUBEN C
11 E 14 RD
MANTON MI 49663

Tax Description

BEG AT SW COR OF SEC: N 723 FT; E 723 FT; S 723 FT; W 723 FT TO POB. 11.99 A M/L GW. SEC. 31 T24N R10W -MESICK-

Comments/Influences

The Equalizer. Copyright (c) 1999 - 2009. Licensed To: Township of Greenwood, County of Wexford, Michigan

Class: RESIDENTIAL-IMPROV Zoning:

School: MESICK CONSOLIDATED SCH DIST

P.R.E. 100% 01/26/2015

:

2024 Est TCV 337,632 TCV/TFA: 242.55

Building Permit(s)	Date	Number	Status
OTHER	10/26/2020	PB20-0200	ENTERED
Res. Add/Alter/Repair	09/21/2009	PM09-10668	
RESIDENTIAL - REMODEL	05/12/2003	PB11492	

X Improved | Vacant

Public Improvements

- Dirt Road
- Gravel Road
- Paved Road
- Storm Sewer
- Sidewalk
- Water
- Sewer
- Electric
- Gas
- Curb
- Street Lights
- Standard Utilities
- Underground Utils.

Topography of Site

- Level
- Rolling
- Low
- High
- Landscaped
- Swamp
- Wooded
- Pond
- Waterfront
- Ravine
- Wetland
- Flood Plain

Who	When	What
GLA	05/11/2020	INSPECTION
GLA	07/10/2019	INSPECTION
GLA	07/10/2019	INSPECTION

Land Value Estimates for Land Table 4010.LAND VALUES

Description	Frontage	Depth	* Factors * Front	Depth	Rate	%Adj.	Reason	Value
ACREAGE			11.440 Acres		4,093	100		46,825
ROW			0.550 Acres		0	100		0
			11.99 Total Acres		Total Est. Land Value =			46,825

Land Improvement Cost Estimates

Description	Rate	Size	% Good	Cash Value
D/W/P: Asphalt Paving	3.12	1684	76	3,993
D/W/P: 3.5 Concrete	6.63	228	80	1,210
Wood Frame	28.20	120	42	1,421
Total Estimated Land Improvements True Cash Value =				6,624

Year	Land Value	Building Value	Assessed Value	Board of Review	Tribunal/ Other	Taxable Value
2024	23,400	145,400	168,800			110,064C
2023	14,900	119,000	133,900			104,823C
2022	13,500	100,600	114,100			99,832C
2021	13,700	101,500	115,200			96,643C

*** Information herein deemed reliable but not guaranteed***

Building Type

X	Single Family
	Mobile Home
	Town Home
	Duplex
	A-Frame
X	Wood Frame

Building Style: RANCH

Yr Built	Remodeled
1974	2003

Condition: Good

Room List

	Basement
	1st Floor
	2nd Floor
	Bedrooms

(1) Exterior

	Wood/Shingle
X	Aluminum/Vinyl
	Brick
X	Insulation

(2) Windows

X	Many		Large
	Avg.	X	Avg.
	Few		Small

	Wood Sash
	Metal Sash
X	Vinyl Sash
	Double Hung
	Horiz. Slide
	Casement
	Double Glass
	Patio Doors
X	Storms & Screens

(3) Roof

X	Gable		Gambrel
	Hip		Mansard
	Flat		Shed

X	Asphalt Shingle

Chimney:

(3) Roof (cont.)

	Eavestrough
X	Insulation
0	Front Overhang
0	Other Overhang

(4) Interior

X	Drywall		Plaster
	Paneled		Wood T&G

Trim & Decoration

	Ex	X	Ord		Min

Size of Closets

	Lg	X	Ord		Small

Doors:		Solid	X	H.C.	

(5) Floors

Kitchen:
Other: Linoleum
Other: Carpeted

(6) Ceilings

X	Drywall

(7) Excavation

Basement: 1392 S.F.
Crawl: 0 S.F.
Slab: 0 S.F.
Height to Joists: 0.0

(8) Basement

	Conc. Block
	Poured Conc.
	Stone
	Treated Wood
	Concrete Floor

(9) Basement Finish

768	Recreation	SF
	Living	SF
	Walkout Doors	(B)
	No Floor	SF
	Walkout Doors	(A)

(10) Floor Support

Joists:
Unsupported Len:
Cntr.Sup:

(11) Heating/Cooling

X	Gas		Oil		Elec.
	Wood		Coal		Steam

	Forced Air w/o Ducts
X	Forced Air w/ Ducts
	Forced Hot Water
	Electric Baseboard
	Elec. Ceil. Radiant
	Radiant (in-floor)
	Electric Wall Heat
	Space Heater
	Wall/Floor Furnace
	Forced Heat & Cool
	Heat Pump
	No Heating/Cooling
	Central Air
	Wood Furnace

(12) Electric

150	Amps Service

No./Qual. of Fixtures

	Ex.	X	Ord.		Min

No. of Elec. Outlets

	Many	X	Ave.		Few

(13) Plumbing

2	Average Fixture(s)
	3 Fixture Bath
	2 Fixture Bath
	Softener, Auto
	Softener, Manual
	Solar Water Heat
	No Plumbing
	Extra Toilet
	Extra Sink
	Separate Shower
	Ceramic Tile Floor
	Ceramic Tile Wains
	Ceramic Tub Alcove
	Vent Fan

(14) Water/Sewer

	Public Water
	Public Sewer
1	Water Well
1	1000 Gal Septic
	2000 Gal Septic

Lump Sum Items:

(15) Built-ins

	Appliance Allow.
	Cook Top
	Dishwasher
	Garbage Disposal
	Bath Heater
	Vent Fan
	Hot Tub
	Unvented Hood
	Vented Hood
	Intercom
	Jacuzzi Tub
	Jacuzzi repl.Tub
	Oven
	Microwave
	Standard Range
	Self Clean Range
	Sauna
	Trash Compactor
	Central Vacuum
	Security System

(15) Fireplaces

	Interior 1 Story
	Interior 2 Story
	2nd/Same Stack
	Two Sided
1	Exterior 1 Story
	Exterior 2 Story
	Prefab 1 Story
	Prefab 2 Story
	Heat Circulator
	Raised Hearth
	Wood Stove
	Direct-Vented Gas

Class: C
Effec. Age: 24
Floor Area: 1,392
Total Base New : 288,301 E.C.F.
Total Depr Cost: 219,108 X 1.297
Estimated T.C.V: 284,183

(16) Porches/Decks

Area	Type
126	WPP
16	WPP
128	CCP (1 Story)
96	WGEP (1 Story)
20	WPP
96	WCP (1 Story)

(17) Garage

Year Built: 2003
Car Capacity:
Class: CD
Exterior: Pole
Brick Ven.: 0
Stone Ven.: 0
Common Wall: Detache
Foundation: 18 Inch
Finished ?:
Auto. Doors: 0
Mech. Doors: 0
Area: 960
% Good: 0
Storage Area: 0
No Conc. Floor: 0

Bsmnt Garage: 1 Car

Carport Area:
Roof:

Cost Est. for Res. Bldg: 1 Single Family RANCH Cls C Blt 1974
(11) Heating System: Forced Air w/ Ducts
Ground Area = 1392 SF Floor Area = 1392 SF.
Phy/Ab.Phy/Func/Econ/Comb. % Good=76/100/100/100/76

Building Areas

Stories	Exterior	Foundation	Size	Cost New	Depr. Cost
1 Story	Siding	Basement	1,392		
			Total:	203,740	154,843
Other Additions/Adjustments					
Recreation Room			768	14,953	11,364
Plumbing					
3 Fixture Bath			1	4,678	3,555
Water/Sewer					
1000 Gal Septic			1	4,899	3,723
Water Well, 100 Feet			1	5,849	4,445
Porches					
WPP			126	3,440	2,614
CCP (1 Story)			128	3,552	2,700
WGEP (1 Story)			96	9,488	7,211
WCP (1 Story)			96	4,698	3,570
WPP			16	854	649
WPP			20	1,067	811
Garages					
Class: CD Exterior: Pole (Unfinished)					
Base Cost			960	21,907	16,649
Basement Garage: 1 Car			1	2,617	1,989
Fireplaces					
Exterior 1 Story			1	6,559	4,985
			Totals:	288,301	219,108

Notes:

ECF (RESIDENTIAL) 1.297 => TCV: 284,183

*** Information herein deemed reliable but not guaranteed***

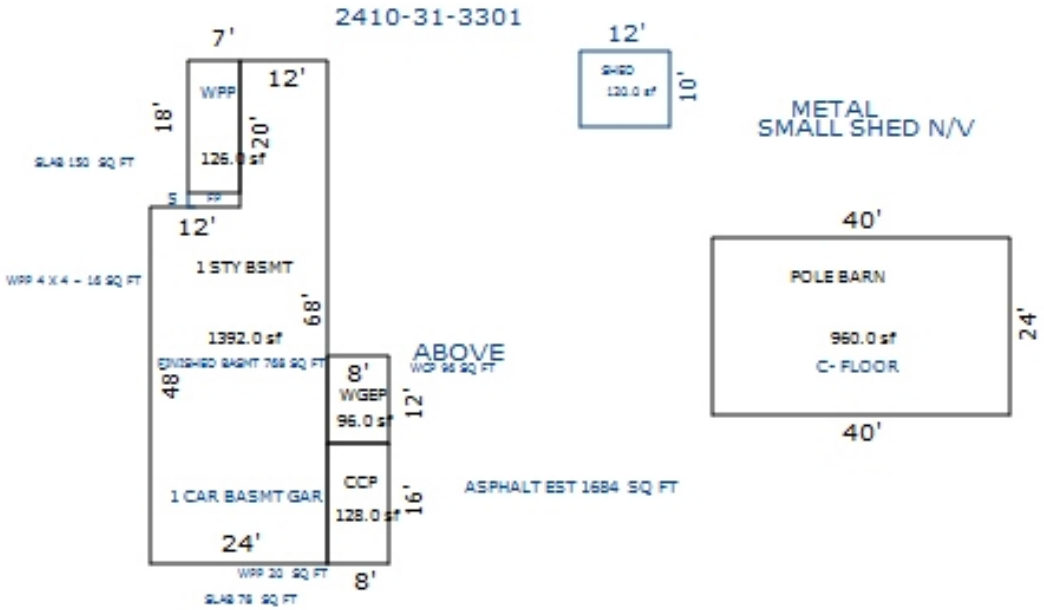

Sketch by Apex Sketch

*** Information herein deemed reliable but not guaranteed***

Parcel Number: 2410-31-3302-01 Jurisdiction: GREENWOOD TWP County: WEXFORD Printed on 02/15/2024

Grantor	Grantee	Sale Price	Sale Date	Inst. Type	Terms of Sale	Liber & Page	Verified By	Prcnt. Trans.
DRAPER, RICHARD E & JENNIF	DRAPER, RICHARD & JENNIFEF	0	10/05/2022	QC	14-INTO/OUT OF TRUST	694/71	DEED	0.0
DRAPER, RICHARD E & JENNIF	DRAPER, RICHARD E & JENNIF	0	06/11/2015	QC	18-LIFE ESTATE	675/1536	DEED	0.0

Property Address

143 E 14 RD

Owner's Name/Address

DRAPER, RICHARD & JENNIFER TRUST LE
143 E 14 RD
MANTON MI 49663

Tax Description

COM AT SW COR OF SEC; N 723 FT TO POB: N 808.3 FT; E 887.8 FT; S 1530.76 FT; W 209.4 FT; N 723 FT; W 723 FT TO POB EXC PAR COM AT SW COR OF SEC; E 913.21 FT TO POB: N 1531.41 FT; E 33.89 FT; S 1531.22 FT; W 19.19 FT TO POB. GW SEC 31 T24N R10W -MESICK- [[ASSESSED W/ 3301 '00 SPLIT ON 07/03/2007 FROM 2410-31-3302;

Comments/Influences

SPLIT/COMB. ON 07/03/2007 COMPLETED 12/01/2008 DEB OWNER REQUEST ;
PARENT PARCEL(S): 2410-31-3302;
CHILD PARCEL(S): 2410-31-3302-01;

Class: RESIDENTIAL-IMPROV Zoning:

School: MESICK CONSOLIDATED SCH DIST

P.R.E. 100% 05/01/2008

:

2024 Est TCV 192,590 TCV/TFA: 214.94

Building Permit(s)	Date	Number	Status
Res. Add/Alter/Repair	07/11/2008	PB08-0156	
RESIDENTIAL - NEW	03/22/2007	PM9565	
RESIDENTIAL - NEW	05/18/2005	PB12736	
RESIDENTIAL - NEW	04/27/2004	PP3416	

X Improved | Vacant

Public Improvements

Dirt Road
Gravel Road
Paved Road
Storm Sewer
Sidewalk
Water
Sewer
Electric
Gas
Curb
Street Lights
Standard Utilities
Underground Utils.

Topography of Site

Level
Rolling
Low
High
Landscaped
Swamp
Wooded
Pond
Waterfront
Ravine
Wetland
Flood Plain

Who When What

GLA 05/11/2020 INSPECTION
GLA 07/10/2019 INSPECTION
GLA 07/10/2019 INSPECTION

Land Value Estimates for Land Table 4010.LAND VALUES

Description	Frontage	Depth	* Factors * Front	Depth	Rate	%Adj.	Reason	Value
ACREAGE			18.550 Acres		3,200	100		59,360
ROW			0.150 Acres		0	100		0
			18.70 Total Acres		Total Est. Land Value =			59,360

Land Improvement Cost Estimates

Description	Rate	Size	% Good	Cash Value
Wood Frame	24.84	200	94	4,670
Total Estimated Land Improvements True Cash Value =				4,670

Year	Land Value	Building Value	Assessed Value	Board of Review	Tribunal/ Other	Taxable Value
2024	29,700	66,600	96,300			61,645C
2023	24,100	54,600	78,700			58,710C
2022	20,600	46,300	66,900			55,915C
2021	19,400	46,700	66,100			54,129C

The Equalizer. Copyright (c) 1999 - 2009.
Licensed To: Township of Greenwood, County of Wexford, Michigan

*** Information herein deemed reliable but not guaranteed***

Building Type

X	Single Family
	Mobile Home
	Town Home
	Duplex
	A-Frame
X	Wood Frame

Building Style: PLAIN

Yr Built	Remodeled
2003	0

Condition: Good

Room List

	Basement
	1st Floor
	2nd Floor
	Bedrooms

(1) Exterior

	Wood/Shingle
X	Aluminum/Vinyl
	Brick
X	Insulation

(2) Windows

	Many		Large
X	Avg.	X	Avg.
	Few		Small

	Wood Sash
	Metal Sash
X	Vinyl Sash
	Double Hung
	Horiz. Slide
	Casement
	Double Glass
	Patio Doors
X	Storms & Screens

(3) Roof

X	Gable		Gambrel
	Hip		Mansard
	Flat		Shed

X	Asphalt Shingle

Chimney:

(3) Roof (cont.)

	Eavestrough
X	Insulation
0	Front Overhang
0	Other Overhang

(4) Interior

X	Drywall		Plaster
	Paneled		Wood T&G

Trim & Decoration

	Ex	X	Ord		Min

Size of Closets

	Lg	X	Ord		Small

Doors:		Solid	X	H.C.	

(5) Floors

Kitchen:
Other: Linoleum
Other: Carpeted

(6) Ceilings

X	Drywall

(7) Excavation

Basement: 0 S.F.
Crawl: 0 S.F.
Slab: 896 S.F.
Height to Joists: 0.0

(8) Basement

	Conc. Block
	Poured Conc.
	Stone
	Treated Wood
	Concrete Floor

(9) Basement Finish

	Recreation SF
	Living SF
	Walkout Doors (B)
	No Floor SF
	Walkout Doors (A)

(10) Floor Support

Joists:
Unsupported Len:
Cntr.Sup:

(11) Heating/Cooling

X	Gas		Oil		Elec.
	Wood		Coal		Steam

	Forced Air w/o Ducts
X	Forced Air w/ Ducts
	Forced Hot Water
	Electric Baseboard
	Elec. Ceil. Radiant
	Radiant (in-floor)
	Electric Wall Heat
	Space Heater
	Wall/Floor Furnace
	Forced Heat & Cool
	Heat Pump
	No Heating/Cooling

	Central Air
	Wood Furnace

(12) Electric

150	Amps Service

No./Qual. of Fixtures

	Ex.	X	Ord.		Min

No. of Elec. Outlets

	Many	X	Ave.		Few

(13) Plumbing

	Average Fixture(s)
1	3 Fixture Bath
	2 Fixture Bath
	Softener, Auto
	Softener, Manual
	Solar Water Heat
	No Plumbing
	Extra Toilet
	Extra Sink
	Separate Shower
	Ceramic Tile Floor
	Ceramic Tile Wains
	Ceramic Tub Alcove
	Vent Fan

(14) Water/Sewer

	Public Water
	Public Sewer
1	Water Well
1	1000 Gal Septic
	2000 Gal Septic

Lump Sum Items:

(15) Built-ins

	Appliance Allow.
	Cook Top
	Dishwasher
	Garbage Disposal
	Bath Heater
	Vent Fan
	Hot Tub
	Unvented Hood
	Vented Hood
	Intercom
	Jacuzzi Tub
	Jacuzzi repl.Tub
	Oven
	Microwave
	Standard Range
	Self Clean Range
	Sauna
	Trash Compactor
	Central Vacuum
	Security System

(15) Fireplaces

	Interior 1 Story
	Interior 2 Story
	2nd/Same Stack
	Two Sided
	Exterior 1 Story
	Exterior 2 Story
	Prefab 1 Story
	Prefab 2 Story
	Heat Circulator
	Raised Hearth
	Wood Stove
	Direct-Vented Gas

Class: CD
Effec. Age: 20
Floor Area: 896
Total Base New : 123,899 E.C.F.
Total Depr Cost: 99,121 X 1.297
Estimated T.C.V: 128,560

(16) Porches/Decks

Area	Type
200	WCP (1 Story)

(17) Garage

Year Built:
Car Capacity:
Class:
Exterior:
Brick Ven.:
Stone Ven.:
Common Wall:
Foundation:
Finished ?:
Auto. Doors:
Mech. Doors:
Area:
% Good:
Storage Area:
No Conc. Floor:

Bsmnt Garage:

Carport Area:
Roof:

Cost Est. for Res. Bldg: 1 Single Family PLAIN Cls CD Blt 2003
(11) Heating System: Forced Air w/ Ducts
Ground Area = 896 SF Floor Area = 896 SF.
Phy/Ab.Phy/Func/Econ/Comb. % Good=80/100/100/100/80
Building Areas

Stories	Exterior	Foundation	Size	Cost New	Depr. Cost
1 Story	Siding	Slab	896		
			Total:	104,663	83,732
Other Additions/Adjustments					
Water/Sewer					
1000 Gal Septic			1	4,582	3,666
Water Well, 100 Feet			1	5,680	4,544
Porches					
WCP (1 Story)			200	7,258	5,806
Local Cost Items					
SHED			220	1,716	1,373
			Totals:	123,899	99,121

Notes:

ECF (RESIDENTIAL) 1.297 => TCV: 128,560

*** Information herein deemed reliable but not guaranteed***

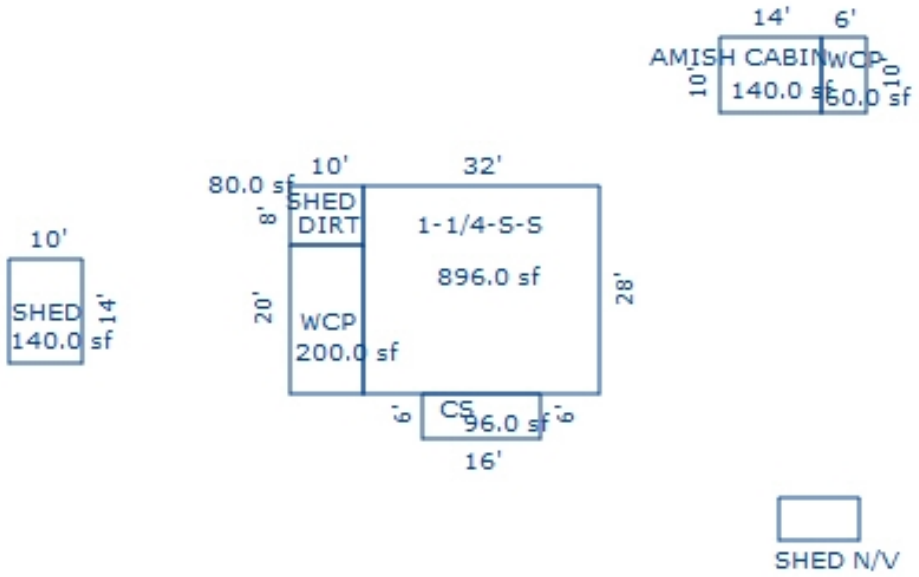

Sketch by Apex Sketch

*** Information herein deemed reliable but not guaranteed***

Parcel Number: 2410-31-3402 Jurisdiction: GREENWOOD TWP County: WEXFORD Printed on 02/15/2024

Grantor	Grantee	Sale Price	Sale Date	Inst. Type	Terms of Sale	Liber & Page	Verified By	Prcnt. Trans.
VALDEZ, BECKY	WHITE, THOMAS	15,000	10/27/2008	QC	03-ARM'S LENGTH	618/2007	DEED	100.0
WHITE, JAQUELYNE L	WHITE, DARL L	1	09/27/2001	OTH	21-NOT USED/OTHER	383:740	DEED	0.0

Property Address

405 E 14 RD

Owner's Name/Address

WHITE, THOMAS
77090 23RD ST
LAWTON MI 49065

Tax Description

COM AT SW COR OF E 1/2 OF E 1/2 OF FRL SW 1/4: N 218 FT; E 180 FT; S 218 FT; W 180 FT TO POB. EXC S 33 FT FOR ROAD PURPOSES -- 1 A. M/L-- GW. SEC. 31 T24N R10W -MESICK-

Comments/Influences

Class: RESIDENTIAL-VACANT Zoning:

School: MESICK CONSOLIDATED SCH DIST

P.R.E. 0%

:

2024 Est TCV 9,529

Building Permit(s)	Date	Number	Status

[ ] Improved [X] Vacant

Public Improvements

	Dirt Road
X	Gravel Road
	Paved Road
	Storm Sewer
	Sidewalk
	Water
	Sewer
X	Electric
	Gas
	Curb
	Street Lights
	Standard Utilities
	Underground Utils.

Topography of Site

X	Level
X	Rolling
	Low
	High
	Landscaped
	Swamp
X	Wooded
	Pond
	Waterfront
	Ravine
	Wetland
	Flood Plain
X	OPEN

Who	When	What
GLA	05/11/2020	INSPECTION
GLA	07/10/2019	INSPECTION
GLA	07/10/2019	INSPECTION

Land Value Estimates for Land Table 4010.LAND VALUES

Description	Frontage	Depth	* Factors * Front	Depth	Rate	%Adj.	Reason	Value
ACREAGE			0.870 Acres		10,953	100		9,529
ROW			0.130 Acres		0	100		0
			1.00 Total Acres		Total Est. Land Value =			9,529

Year	Land Value	Building Value	Assessed Value	Board of Review	Tribunal/ Other	Taxable Value
2024	4,800	0	4,800			2,425C
2023	2,600	0	2,600			2,310C
2022	2,200	0	2,200			2,200S
2021	2,600	0	2,600			2,179C

The Equalizer. Copyright (c) 1999 - 2009. Licensed To: Township of Greenwood, County of Wexford, Michigan

*** Information herein deemed reliable but not guaranteed***

Parcel Number: 2410-31-4101 Jurisdiction: GREENWOOD TWP County: WEXFORD Printed on 02/15/2024

Grantor	Grantee	Sale Price	Sale Date	Inst. Type	Terms of Sale	Liber & Page	Verified By	Prcnt. Trans.

Property Address

Owner's Name/Address

PHELPS, DARLA L.
TRUST
1601 W QUEEN CREEK RD STE 204
CHANDLER AZ 85248

Tax Description

NE 1/4 OF SE 1/4; SE 1/4 OF SE 1/4 EXC E 24 RDS & EXC W 20 RDS THEREOF 58 A. GW. SEC. 31 T24N R10W -MESICK-

Comments/Influences

Class: RESIDENTIAL-VACANT Zoning:

School: MESICK CONSOLIDATED SCH DIST

P.R.E. 0%

:

2024 Est TCV 153,167

	Building Permit(s)	Date	Number	Status

[ ] Improved [X] Vacant

	Public Improvements
X	Dirt Road
X	Gravel Road
	Paved Road
	Storm Sewer
	Sidewalk
	Water
	Sewer
X	Electric
	Gas
	Curb
	Street Lights
	Standard Utilities
	Underground Utils.

	Topography of Site
	Level
X	Rolling
	Low
	High
	Landscaped
	Swamp
X	Wooded
	Pond
	Waterfront
	Ravine
	Wetland
	Flood Plain
X	OPEN/PINES

Who	When	What
GLA	05/11/2020	INSPECTION
GLA	07/10/2019	INSPECTION
GLA	07/10/2019	INSPECTION

Land Value Estimates for Land Table 4010.LAND VALUES

Description	Frontage	Depth	* Factors * Front	Depth	Rate	%Adj.	Reason	Value
ACREAGE			57.626 Acres		2,658	100		153,167
ROW			0.374 Acres		0	100		0
			58.00 Total Acres		Total Est. Land Value =			153,167

Year	Land Value	Building Value	Assessed Value	Board of Review	Tribunal/ Other	Taxable Value
2024	76,600	0	76,600			22,593C
2023	75,100	0	75,100			21,518C
2022	49,000	0	49,000			20,494C
2021	47,500	0	47,500			19,840C

The Equalizer. Copyright (c) 1999 - 2009.
Licensed To: Township of Greenwood, County of Wexford, Michigan

*** Information herein deemed reliable but not guaranteed***

Parcel Number: 2410-31-4201 Jurisdiction: GREENWOOD TWP County: WEXFORD Printed on 02/15/2024

Grantor	Grantee	Sale Price	Sale Date	Inst. Type	Terms of Sale	Liber & Page	Verified By	Prcnt. Trans.
HAYNES, RONALD ETAL	CLARK, DEE & PATRICIA	0	07/31/2007	QC	09-FAMILY	603/1923	DEED	66.0
CLAYTON, ORIEAN 08%	HAYNES ET AL, RONALD	9,000	05/03/1986	LC	03-ARM'S LENGTH	303:684	DEED	0.0

Property Address

701 E 14 RD

Owner's Name/Address

CLARK, DEE & PATRICIA
701 E 14 RD
MANTON MI 49663

Tax Description

E 540 FT OF W 1/2 OF SE 1/4 EXC S 626.13 FT OF W 208.71 FT THEREOF. 29.4 A - AKA PARCEL B & PAR COM 759.47 FT E OF S 1/4 POST: N 626.13 FT; E 208.71 FT; S 626.13 FT; W 208.71 FT TO POB. AKA PAR "C" 3 A. M/L GW. SEC. 31 T24N R10W -MESICK ASSESSED W/ 31-4203 '07

Comments/Influences

The Equalizer. Copyright (c) 1999 - 2009.
Licensed To: Township of Greenwood, County of Wexford, Michigan

Class: RESIDENTIAL-IMPROV Zoning:
School: MESICK CONSOLIDATED SCH DIST
P.R.E. 100% 04/28/2011
:
2024 Est TCV 440,793 TCV/TFA: 226.63

Building Permit(s)	Date	Number	Status
Mechanical	11/29/2010	PM10-11238	
Mechanical	11/08/2010	PM10-11196	
Res. Single Family	10/06/2010	PM10-11130	
Res. Single Family	07/21/2010	PE10-18773	

X Improved | Vacant

	Public Improvements
	Dirt Road
X	Gravel Road
	Paved Road
	Storm Sewer
	Sidewalk
	Water
	Sewer
X	Electric
	Gas
	Curb
	Street Lights
	Standard Utilities
	Underground Utils.

	Topography of Site
	Level
X	Rolling
	Low
	High
	Landscaped
	Swamp
X	Wooded
	Pond
	Waterfront
	Ravine
	Wetland
	Flood Plain
X	PINES

Who	When	What
GLA	05/11/2020	INSPECTION
GLA	07/10/2019	INSPECTION
GLA	07/10/2019	INSPECTION

Land Value Estimates for Land Table 4010.LAND VALUES

Description	Frontage	Depth	* Factors * Front	Depth	Rate	%Adj.	Reason	Value
ACREAGE			28.960 Acres		2,722	100		78,829
ROW			0.440 Acres		0	100		0
			29.40 Total Acres		Total Est. Land Value =			78,829

Year	Land Value	Building Value	Assessed Value	Board of Review	Tribunal/ Other	Taxable Value
2024	39,400	181,000	220,400			131,431C
2023	36,200	147,400	183,600			125,173C
2022	30,700	124,100	154,800			119,213C
2021	26,600	125,400	152,000			115,405C

*** Information herein deemed reliable but not guaranteed***

Building Type

X	Single Family
	Mobile Home
	Town Home
	Duplex
	A-Frame
X	Wood Frame

Building Style: PLAIN

Yr Built	Remodeled
2010	0

Condition: Good

Room List

	Basement
	1st Floor
	2nd Floor
	Bedrooms

(1) Exterior

	Wood/Shingle
X	Aluminum/Vinyl
	Brick
X	Insulation

(2) Windows

X	Many Avg. Few	X	Large Avg. Small

	Wood Sash
	Metal Sash
X	Vinyl Sash
	Double Hung
	Horiz. Slide
	Casement
	Double Glass
	Patio Doors
X	Storms & Screens

(3) Roof

X	Gable		Gambrel
	Hip		Mansard
	Flat		Shed

X	Asphalt Shingle

Chimney:

(3) Roof (cont.)

	Eavestrough
X	Insulation
0	Front Overhang
0	Other Overhang

(4) Interior

X	Drywall		Plaster
	Paneled		Wood T&G

Trim & Decoration

	Ex	X	Ord		Min

Size of Closets

	Lg	X	Ord		Small

Doors:		Solid	X	H.C.	

(5) Floors

Kitchen:
Other: Linoleum
Other: Carpeted

(6) Ceilings

X	Drywall

(7) Excavation

Basement: 1376 S.F.
Crawl: 0 S.F.
Slab: 0 S.F.
Height to Joists: 0.0

(8) Basement

	Conc. Block
	Poured Conc.
	Stone
	Treated Wood
	Concrete Floor

(9) Basement Finish

682	Recreation	SF
	Living	SF
1	Walkout Doors (B)	
	No Floor	SF
	Walkout Doors (A)	

(10) Floor Support

Joists:
Unsupported Len:
Cntr.Sup:

(11) Heating/Cooling

X	Gas		Oil		Elec.
	Wood		Coal		Steam

	Forced Air w/o Ducts
X	Forced Air w/ Ducts
	Forced Hot Water
	Electric Baseboard
	Elec. Ceil. Radiant
	Radiant (in-floor)
	Electric Wall Heat
	Space Heater
	Wall/Floor Furnace
	Forced Heat & Cool
	Heat Pump
	No Heating/Cooling

X	Central Air
	Wood Furnace

(12) Electric

150	Amps Service

No./Qual. of Fixtures

	Ex.	X	Ord.		Min

No. of Elec. Outlets

	Many	X	Ave.		Few

(13) Plumbing

2	Average Fixture(s)
	3 Fixture Bath
	2 Fixture Bath
	Softener, Auto
	Softener, Manual
	Solar Water Heat
	No Plumbing
	Extra Toilet
	Extra Sink
	Separate Shower
	Ceramic Tile Floor
	Ceramic Tile Wains
	Ceramic Tub Alcove
	Vent Fan

(14) Water/Sewer

	Public Water
	Public Sewer
1	Water Well
1	1000 Gal Septic
	2000 Gal Septic

Lump Sum Items:

(15) Built-ins

	Appliance Allow.
	Cook Top
	Dishwasher
	Garbage Disposal
	Bath Heater
	Vent Fan
	Hot Tub
	Unvented Hood
	Vented Hood
	Intercom
	Jacuzzi Tub
	Jacuzzi repl.Tub
	Oven
	Microwave
	Standard Range
	Self Clean Range
	Sauna
	Trash Compactor
	Central Vacuum
	Security System

(15) Fireplaces

	Interior 1 Story
	Interior 2 Story
	2nd/Same Stack
	Two Sided
1	Exterior 1 Story
	Exterior 2 Story
	Prefab 1 Story
	Prefab 2 Story
	Heat Circulator
	Raised Hearth
	Wood Stove
	Direct-Vented Gas

Class: CD
Effec. Age: 14
Floor Area: 1,945
Total Base New : 325,188 E.C.F.
Total Depr Cost: 279,078 X 1.297
Estimated T.C.V: 361,964

(16) Porches/Decks

Area	Type
300	WCP (1 Story)
428	WCP (1 Story)
140	4in Concrete

(17) Garage

Year Built:
Car Capacity:
Class: C
Exterior: Siding
Brick Ven.: 0
Stone Ven.: 0
Common Wall: 1 Wall
Foundation: 42 Inch
Finished ?:
Auto. Doors: 0
Mech. Doors: 0
Area: 784
% Good: 0
Storage Area: 0
No Conc. Floor: 0

Bsmnt Garage:

Carport Area:
Roof:

Cost Est. for Res. Bldg: 1 Single Family PLAIN Cls CD Blt 2010
(11) Heating System: Forced Air w/ Ducts , Air Conditioning
Ground Area = 1376 SF Floor Area = 1945 SF.
Phy/Ab.Phy/Func/Econ/Comb. % Good=86/100/100/100/86
Building Areas

Stories	Exterior	Foundation	Size	Cost New	Depr. Cost	
2 Story	Siding	Basement	544			
1 Story	Siding	Basement	832			
1 Story	Siding	Overhang	25			
			Total:	237,775	204,486	
Other Additions/Adjustments						
Recreation Room			682	12,726	10,944	
Basement, Outside Entrance, Below Grade			1	2,176	1,871	
Plumbing						
3 Fixture Bath			1	3,887	3,343	
Water/Sewer						
1000 Gal Septic			1	4,582	3,941	
Water Well, 100 Feet			1	5,680	4,885	
Porches						
WCP (1 Story)			300	8,838	7,601	
WCP (1 Story)			428	12,570	10,810	
4in Concrete			140	1,036	891	
Garages						
Class: C Exterior: Siding Foundation: 42 Inch (Unfinished)						
Base Cost			784	30,929	26,599	
Common Wall: 1 Wall			1	-2,705	-2,326	
Fireplaces						
Exterior 1 Story			1	5,748	4,943	
Local Cost Items						
WOOD LEAN TO			140	854	478	*5

<<<<< Calculations too long. See Valuation printout for complete pricing. >>>>>

*** Information herein deemed reliable but not guaranteed***

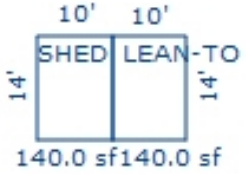

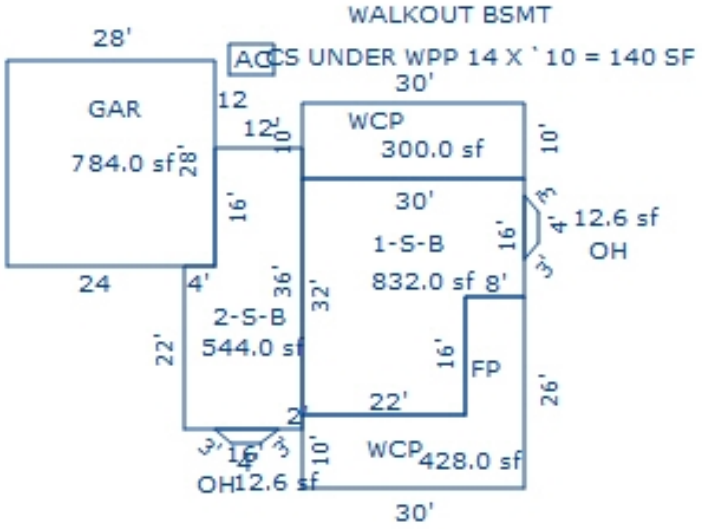

Sketch by Apex Sketch

*** Information herein deemed reliable but not guaranteed***

Parcel Number: 2410-31-4202 Jurisdiction: GREENWOOD TWP County: WEXFORD Printed on 02/15/2024

Grantor	Grantee	Sale Price	Sale Date	Inst. Type	Terms of Sale	Liber & Page	Verified By	Prcnt. Trans.
CLAYTON, LARRY N.	CLAYTON, LARRY N & KAMI VC	0	11/10/2021	QC	21-NOT USED/OTHER	691/1504	DEED	0.0

Property Address

651 E 14 RD

Owner's Name/Address

CLAYTON, LARRY N & KAMI VORSIES
651 E 14 RD
MANTON MI 49663

Tax Description

W 1/2 OF SE 1/4 EXC W 16 RDS OF S 20 RDS & EXC E 540 FT & EXC PAR COM AT S 1/4 COR OF SEC, TH N 330.06 FT TO POB: N 2610.22 FT; E 80 FT M/L TO EXISTING FENCE LINE; SW'LY ALONG FENCE LINE TO A PT 15 FT M/L E OF POB; W 15 TO POB. --43.3 A. M/L-- GW. SEC. 31 T24N R10W -MESICK-

Comments/Influences

Class: RESIDENTIAL-IMPROV Zoning:

School: MESICK CONSOLIDATED SCH DIST

P.R.E. 100% / /

:

2024 Est TCV 250,972 TCV/TFA: 149.39

Building Permit(s)	Date	Number	Status

X	Improved		Vacant

	Public Improvements
	Dirt Road
X	Gravel Road
	Paved Road
	Storm Sewer
	Sidewalk
	Water
	Sewer
X	Electric
	Gas
	Curb
	Street Lights
	Standard Utilities
	Underground Utils.

	Topography of Site
	Level
X	Rolling
	Low
	High
	Landscaped
	Swamp
X	Wooded
	Pond
	Waterfront
	Ravine
	Wetland
	Flood Plain
X	OPEN/PINES

Who	When	What
GLA	05/11/2020	INSPECTION
GLA	07/10/2019	INSPECTION
GLA	07/10/2019	INSPECTION

Land Value Estimates for Land Table 4010.LAND VALUES

Description	Frontage	Depth	* Factors * Front	Depth	Rate	%Adj.	Reason	Value
ACREAGE			42.860 Acres		2,722	100		116,665
ROW			0.440 Acres		0	100		0
			43.30 Total Acres		Total Est. Land Value =			116,665

Land Improvement Cost Estimates

Description	Rate	Size	% Good	Cash Value
D/W/P: 3.5 Concrete	5.82	629	46	1,684
Wood Frame	19.06	276	46	2,420
Total Estimated Land Improvements True Cash Value =				4,104

Year	Land Value	Building Value	Assessed Value	Board of Review	Tribunal/ Other	Taxable Value
2024	58,300	67,200	125,500			59,797C
2023	54,700	55,500	110,200			56,950C
2022	39,300	47,400	86,700			54,239C
2021	36,400	48,200	84,600			52,507C

The Equalizer. Copyright (c) 1999 - 2009.
Licensed To: Township of Greenwood, County of Wexford, Michigan

*** Information herein deemed reliable but not guaranteed***

Building Type

X	Single Family
	Mobile Home
	Town Home
	Duplex
	A-Frame
X	Wood Frame

Building Style: FARMHOUSE

Yr Built	Remodeled
0	0

Condition: Good

Room List

	Basement
	1st Floor
	2nd Floor
	Bedrooms

(1) Exterior

X	Wood/Shingle
	Aluminum/Vinyl
	Brick
X	Insulation

(2) Windows

	Many		Large
X	Avg.	X	Avg.
	Few		Small

X	Wood Sash
	Metal Sash
	Vinyl Sash
	Double Hung
	Horiz. Slide
	Casement
	Double Glass
	Patio Doors
X	Storms & Screens

(3) Roof

X	Gable		Gambrel
	Hip		Mansard
	Flat		Shed

X	Asphalt Shingle

Chimney:

(3) Roof (cont.)

	Eavestrough
X	Insulation
0	Front Overhang
0	Other Overhang

(4) Interior

X	Drywall		Plaster
X	Paneled		Wood T&G

Trim & Decoration

	Ex	X	Ord		Min

Size of Closets

	Lg	X	Ord		Small

Doors:		Solid	X	H.C.	

(5) Floors

Kitchen:
Other: Linoleum
Other: Carpeted

(6) Ceilings

X	Drywall		

(7) Excavation

Basement: 800 S.F.
Crawl: 320 S.F.
Slab: 0 S.F.
Height to Joists: 0.0

(8) Basement

	Conc. Block
	Poured Conc.
	Stone
	Treated Wood
	Concrete Floor

(9) Basement Finish

	Recreation SF
	Living SF
	Walkout Doors (B)
	No Floor SF
	Walkout Doors (A)

(10) Floor Support

Joists:
Unsupported Len:
Cntr.Sup:

(11) Heating/Cooling

X	Gas		Oil		Elec.
	Wood		Coal		Steam

	Forced Air w/o Ducts
X	Forced Air w/ Ducts
	Forced Hot Water
	Electric Baseboard
	Elec. Ceil. Radiant
	Radiant (in-floor)
	Electric Wall Heat
	Space Heater
	Wall/Floor Furnace
	Forced Heat & Cool
	Heat Pump
	No Heating/Cooling

	Central Air
	Wood Furnace

(12) Electric

150	Amps Service

No./Qual. of Fixtures

	Ex.	X	Ord.		Min

No. of Elec. Outlets

	Many	X	Ave.		Few

(13) Plumbing

	Average Fixture(s)
1	3 Fixture Bath
	2 Fixture Bath
	Softener, Auto
	Softener, Manual
	Solar Water Heat
	No Plumbing
	Extra Toilet
	Extra Sink
	Separate Shower
	Ceramic Tile Floor
	Ceramic Tile Wains
	Ceramic Tub Alcove
	Vent Fan

(14) Water/Sewer

	Public Water
	Public Sewer
1	Water Well
1	1000 Gal Septic
	2000 Gal Septic

Lump Sum Items:

(15) Built-ins

	Appliance Allow.
	Cook Top
	Dishwasher
	Garbage Disposal
	Bath Heater
	Vent Fan
	Hot Tub
	Unvented Hood
	Vented Hood
	Intercom
	Jacuzzi Tub
	Jacuzzi repl.Tub
	Oven
	Microwave
	Standard Range
	Self Clean Range
	Sauna
	Trash Compactor
	Central Vacuum
	Security System

(15) Fireplaces

	Interior 1 Story
	Interior 2 Story
	2nd/Same Stack
	Two Sided
	Exterior 1 Story
	Exterior 2 Story
	Prefab 1 Story
	Prefab 2 Story
	Heat Circulator
	Raised Hearth
	Wood Stove
	Direct-Vented Gas

Class: D
Effec. Age: 54
Floor Area: 1,680
Total Base New : 218,232 E.C.F.
Total Depr Cost: 100,388 X 1.297
Estimated T.C.V: 130,203

(16) Porches/Decks

Area	Type
272	WPP
120	WGEP (1 Story)
80	4in Concrete

(17) Garage

Year Built:
Car Capacity:
Class: D
Exterior: Pole
Brick Ven.: 0
Stone Ven.: 0
Common Wall: Detache
Foundation: 18 Inch
Finished ?:
Auto. Doors: 0
Mech. Doors: 0
Area: 960
% Good: 0
Storage Area: 0
No Conc. Floor: 0

Bsmnt Garage:

Carport Area:
Roof:

Cost Est. for Res. Bldg: 1 Single Family FARMHOUSE Cls D Blt 0
(11) Heating System: Forced Air w/ Ducts
Ground Area = 1120 SF Floor Area = 1680 SF.
Phy/Ab.Phy/Func/Econ/Comb. % Good=46/100/100/100/46
Building Areas

Stories	Exterior	Foundation	Size	Cost New	Depr. Cost
2 Story	Siding	Basement	560		
1 Story	Siding	Crawl Space	320		
1 Story	Siding	Basement	240		
			Total:	173,212	79,678
Other Additions/Adjustments					
Water/Sewer					
1000 Gal Septic			1	4,293	1,975
Water Well, 100 Feet			1	5,545	2,551
Porches					
WPP			272	3,971	1,827
WGEP (1 Story)			120	9,244	4,252
4in Concrete			80	533	245
Garages					
Class: D Exterior: Pole (Unfinished)					
Base Cost			960	19,334	8,894
Local Cost Items					
POLE LEAN TO			400	2,100	966
			Totals:	218,232	100,388

Notes:

ECF (RESIDENTIAL) 1.297 => TCV: 130,203

*** Information herein deemed reliable but not guaranteed***

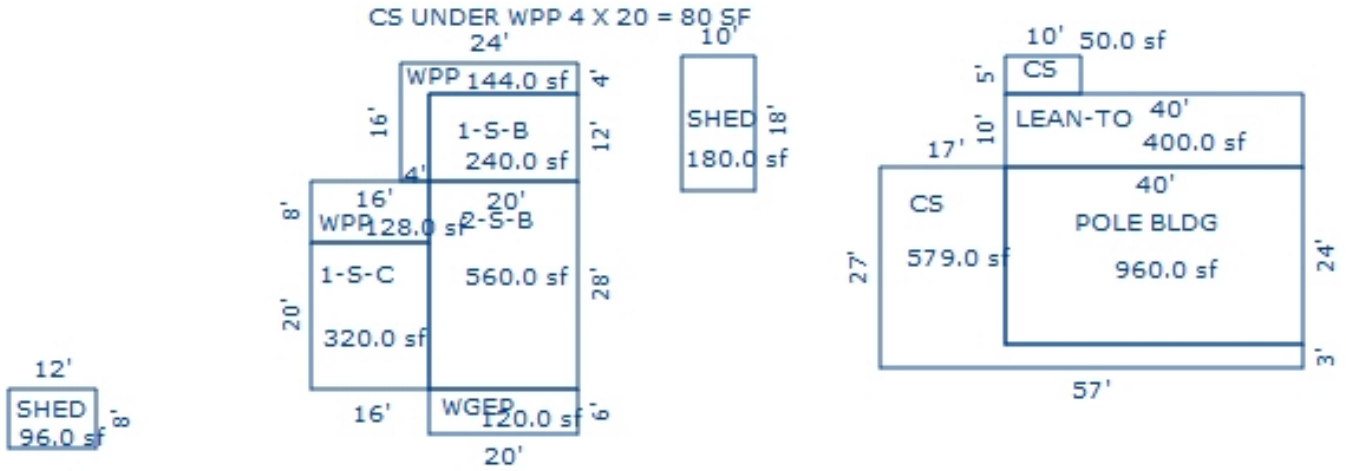

Sketch by Apex Sketch

*** Information herein deemed reliable but not guaranteed***

Parcel Number: 2410-31-4302 Jurisdiction: GREENWOOD TWP County: WEXFORD Printed on 02/15/2024

Grantor	Grantee	Sale Price	Sale Date	Inst. Type	Terms of Sale	Liber & Page	Verified By	Prcnt. Trans.
KRUEGER, THOMAS G		13,000	07/17/2017	WD	16-LC PAYOFF	680 /2601	DEED	0.0
ROSE LAND & FINANCE CORP	KRUEGER, THOMAS G	0	08/07/2007	MLC	21-NOT USED/OTHER	603/560	DEED	100.0
SCHMUHL, CHARLES W.	SMITH, DONALD R.	15,900	01/04/1995	WD	03-ARM'S LENGTH	342:786	DEED	0.0

Property Address

543 E 14 RD

Owner's Name/Address

KRUEGER, THOMAS G
481 E 14 RD
MANTON MI 49663

Tax Description

E 64 FT OF W 16 RDS OF S 20 RDS OF W 1/2 OF SE 1/4 --.2 A. M/L-- GW. SEC. 31 T24N R10W -MESICK-

Comments/Influences

The Equalizer. Copyright (c) 1999 - 2009. Licensed To: Township of Greenwood, County of Wexford, Michigan

Class: RESIDENTIAL-IMPROV Zoning:

School: MESICK CONSOLIDATED SCH DIST

P.R.E. 0%

:

2024 Est TCV 34,142 TCV/TFA: 41.84

Building Permit(s)	Date	Number	Status

X	Improved		Vacant

	Public Improvements
	Dirt Road
X	Gravel Road
	Paved Road
	Storm Sewer
	Sidewalk
	Water
	Sewer
X	Electric
	Gas
	Curb
	Street Lights
	Standard Utilities
	Underground Utils.

	Topography of Site
	Level
X	Rolling
	Low
	High
	Landscaped
	Swamp
	Wooded
	Pond
	Waterfront
	Ravine
	Wetland
	Flood Plain
X	OPEN/PINES

Who	When	What
GLA	05/11/2020	INSPECTION
GLA	07/10/2019	INSPECTION
GLA	07/10/2019	INSPECTION

Land Value Estimates for Land Table 4010.LAND VALUES

Description	Frontage	Depth	* Factors * Front	Depth	Rate	%Adj.	Reason	Value
ACREAGE			0.150 Acres		10,953	100		1,643
ROW			0.050 Acres		0	100		0
			0.20 Total Acres		Total Est. Land Value =			1,643

Land Improvement Cost Estimates

Description	Rate	Size	% Good	Cash Value
Wood Frame	19.35	240	30	1,393
Total Estimated Land Improvements True Cash Value =				1,393

Year	Land Value	Building Value	Assessed Value	Board of Review	Tribunal/ Other	Taxable Value
2024	800	16,300	17,100			9,927C
2023	500	13,100	13,600			9,455C
2022	400	11,000	11,400			9,005C
2021	500	9,500	10,000			8,718C

*** Information herein deemed reliable but not guaranteed***

Building Type

	Single Family
X	Mobile Home
	Town Home
	Duplex
	A-Frame

X	Wood Frame

Building Style: SWT/DWT

Yr Built	Remodeled
0	0

Condition: Good

Room List

	Basement
	1st Floor
	2nd Floor
	Bedrooms

(1) Exterior

	Wood/Shingle
X	Aluminum/Vinyl
	Brick
X	Insulation

(2) Windows

	Many		Large
X	Avg.	X	Avg.
	Few		Small

	Wood Sash
	Metal Sash
X	Vinyl Sash
	Double Hung
	Horiz. Slide
	Casement
	Double Glass
	Patio Doors
X	Storms & Screens

(3) Roof

X	Gable		Gambrel
	Hip		Mansard
	Flat		Shed

X	Asphalt Shingle

Chimney:

(3) Roof (cont.)

	Eavestrough
X	Insulation
0	Front Overhang
0	Other Overhang

(4) Interior

X	Drywall		Plaster
	Paneled		Wood T&G

Trim & Decoration

	Ex	X	Ord		Min

Size of Closets

	Lg	X	Ord		Small

Doors:		Solid	X	H.C.	

(5) Floors

Kitchen:
Other: Linoleum
Other: Carpeted

(6) Ceilings

X	Drywall		

(7) Excavation

Basement: 0 S.F.
Crawl: 144 S.F.
Slab: 0 S.F.
Height to Joists: 0.0

(8) Basement

	Conc. Block
	Poured Conc.
	Stone
	Treated Wood
	Concrete Floor

(9) Basement Finish

	Recreation SF
	Living SF
	Walkout Doors (B)
	No Floor SF
	Walkout Doors (A)

(10) Floor Support

Joists:
Unsupported Len:
Cntr.Sup:

(11) Heating/Cooling

X	Gas		Oil		Elec.
	Wood		Coal		Steam

X	Forced Warm Air
	Wall Furnace
	Warm & Cool Air
	Heat Pump

	Central Air
	Wood Furnace

(12) Electric

150	Amps Service

No./Qual. of Fixtures

	Ex.	X	Ord.		Min

No. of Elec. Outlets

	Many	X	Ave.		Few

(13) Plumbing

1	Average Fixture(s)
	3 Fixture Bath
	2 Fixture Bath
	Softener, Auto
	Softener, Manual
	Solar Water Heat
	No Plumbing
	Extra Toilet
	Extra Sink
	Separate Shower
	Ceramic Tile Floor
	Ceramic Tile Wains
	Ceramic Tub Alcove
	Vent Fan

(14) Water/Sewer

	Public Water
	Public Sewer
1	Water Well
1	1000 Gal Septic
	2000 Gal Septic

Lump Sum Items:

(15) Built-ins

	Appliance Allow.
	Cook Top
	Dishwasher
	Garbage Disposal
	Bath Heater
	Vent Fan
	Hot Tub
	Unvented Hood
	Vented Hood
	Intercom
	Jacuzzi Tub
	Jacuzzi repl.Tub
	Oven
	Microwave
	Standard Range
	Self Clean Range
	Sauna
	Trash Compactor
	Central Vacuum
	Security System

(15) Fireplaces

	Interior 1 Story
	Interior 2 Story
	2nd/Same Stack
	Two Sided
	Exterior 1 Story
	Exterior 2 Story
	Prefab 1 Story
	Prefab 2 Story
	Heat Circulator
	Raised Hearth
	Wood Stove
	Direct-Vented Gas

Class: Average
Effec. Age: 30
Floor Area:
Total Base New : 68,523 E.C.F.
Total Depr Cost: 23,983 X 1.297
Estimated T.C.V: 31,106

(16) Porches/Decks

Area	Type

(17) Garage

Year Built:
Car Capacity:
Class:
Exterior:
Brick Ven.:
Stone Ven.:
Common Wall:
Foundation:
Finished ?:
Auto. Doors:
Mech. Doors:
Area:
% Good:
Storage Area:
No Conc. Floor:

Bsmnt Garage:

Carport Area:
Roof:

Cost Est. for Res. Bldg: 1 Mobile Home SWT/DWT Cls Average Blt 0
(11) Heating System: Wall Furnace
Ground Area = 816 SF Floor Area = 816 SF.
Phy/Ab.Phy/Func/Econ/Comb. % Good=35/100/100/100/35
Building Areas

Type	Ext. Walls	Roof/Fnd.	Size	Cost New	Depr. Cost
Main Home	Ribbed	Metal	672		
Addition	Siding	Crawl	144		
			Total:	56,311	19,709
Other Additions/Adjustments					
Skirting, Metal or Vinyl, Vertical			128	1,464	512
Water/Sewer					
1000 Gal Septic			1	4,899	1,715
Water Well, 100 Feet			1	5,849	2,047
			Totals:	68,523	23,983

Notes:

ECF (RESIDENTIAL) 1.297 => TCV: 31,106

*** Information herein deemed reliable but not guaranteed***

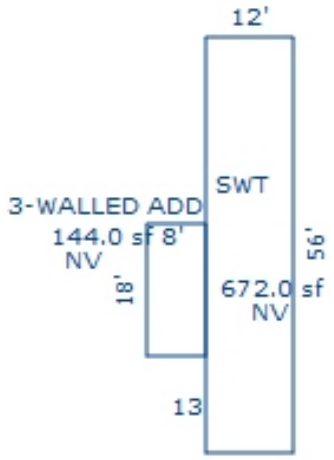

Sketch by Apex Sketch

*** Information herein deemed reliable but not guaranteed***

Parcel Number: 2410-31-4303 Jurisdiction: GREENWOOD TWP County: WEXFORD Printed on 02/15/2024

Grantor	Grantee	Sale Price	Sale Date	Inst. Type	Terms of Sale	Liber & Page	Verified By	Prcnt. Trans.
JONES, CATHLEEN TRUST	JOHNS, GORDON R	19,000	11/14/2003	WD	08-ESTATE	524:479	DEED	0.0
JOHNS, GORDON ESTATE	KRUEGER, THOMAS	20,000	11/13/2003	WD	03-ARM'S LENGTH	524:485	DEED	0.0

Property Address

535 E 14 RD

Owner's Name/Address

KRUEGER, THOMAS G
535 E 14 RD
MANTON MI 49663

Tax Description

W 16 RDS OF S 20 RDS OF W 1/2 OF SE 1/4 EXC W 88 FT & EXC E 64 FT THEREOF .875 A. M/L-- GW. SEC. 31 T24N R10W -MESICK-

Comments/Influences

The Equalizer. Copyright (c) 1999 - 2009.
Licensed To: Township of Greenwood, County of Wexford, Michigan

Class: RESIDENTIAL-IMPROV Zoning:
School: MESICK CONSOLIDATED SCH DIST
P.R.E. 100% / /
:
2024 Est TCV 75,085 TCV/TFA: 64.07

Building Permit(s)	Date	Number	Status
Res. New Construction	12/13/2010	PE10-18934	
Permit renewal (50% of ori	12/09/2010	PB10-0287	
Res. Add/Alter/Repair	03/02/2009	PB09-0029	
RESIDENTIAL - REMODEL	10/02/2007	PB13719	

X	Improved		Vacant

	Public Improvements
	Dirt Road
X	Gravel Road
	Paved Road
	Storm Sewer
	Sidewalk
	Water
	Sewer
X	Electric
	Gas
	Curb
	Street Lights
	Standard Utilities
	Underground Utils.

	Topography of Site
	Level
X	Rolling
	Low
	High
	Landscaped
	Swamp
	Wooded
	Pond
	Waterfront
	Ravine
	Wetland
	Flood Plain
X	OPEN

Who	When	What
GLA	05/11/2020	INSPECTION
GLA	07/10/2019	INSPECTION
GLA	07/10/2019	INSPECTION

Land Value Estimates for Land Table 4010.LAND VALUES

Description	Frontage	Depth	* Factors * Front	Depth	Rate	%Adj.	Reason	Value
ACREAGE			0.795 Acres		10,953	100		8,708
ROW			0.080 Acres		0	100		0
			0.88 Total Acres		Total Est. Land Value =			8,708

Land Improvement Cost Estimates

Description	Rate	Size	% Good	Cash Value
D/W/P: 4in Concrete	7.01	36	45	113
Total Estimated Land Improvements True Cash Value =				113

Year	Land Value	Building Value	Assessed Value	Board of Review	Tribunal/ Other	Taxable Value
2024	4,400	33,100	37,500			13,541C
2023	2,400	26,700	29,100			12,897C
2022	2,000	22,200	24,200			12,283C
2021	2,400	22,200	24,600			11,891C

*** Information herein deemed reliable but not guaranteed***

Building Type

X	Single Family
	Mobile Home
	Town Home
	Duplex
	A-Frame
X	Wood Frame

Building Style: PLAIN

Yr Built	Remodeled
0	0

Condition: Good

Room List

	Basement
	1st Floor
	2nd Floor
	Bedrooms

(1) Exterior

	Wood/Shingle
X	Aluminum/Vinyl
	Brick
X	Insulation

(2) Windows

	Many		Large
X	Avg.	X	Avg.
	Few		Small

	Wood Sash
	Metal Sash
X	Vinyl Sash
	Double Hung
	Horiz. Slide
	Casement
	Double Glass
	Patio Doors
X	Storms & Screens

(3) Roof

X	Gable		Gambrel
	Hip		Mansard
	Flat		Shed

X	Asphalt Shingle

Chimney:

(3) Roof (cont.)

	Eavestrough
X	Insulation
0	Front Overhang
0	Other Overhang

(4) Interior

X	Drywall		Plaster
	Paneled		Wood T&G

Trim & Decoration

	Ex	X	Ord		Min

Size of Closets

	Lg	X	Ord		Small

Doors:		Solid	X	H.C.	

(5) Floors

Kitchen:
Other: Linoleum
Other: Carpeted

(6) Ceilings

X	Drywall		

(7) Excavation

Basement: 0 S.F.
Crawl: 884 S.F.
Slab: 0 S.F.
Height to Joists: 0.0

(8) Basement

	Conc. Block
	Poured Conc.
	Stone
	Treated Wood
	Concrete Floor

(9) Basement Finish

	Recreation SF
	Living SF
	Walkout Doors (B)
	No Floor SF
	Walkout Doors (A)

(10) Floor Support

Joists:
Unsupported Len:
Cntr.Sup:

(11) Heating/Cooling

X	Gas		Oil		Elec.
	Wood		Coal		Steam

	Forced Air w/o Ducts
X	Forced Air w/ Ducts
	Forced Hot Water
	Electric Baseboard
	Elec. Ceil. Radiant
	Radiant (in-floor)
	Electric Wall Heat
	Space Heater
	Wall/Floor Furnace
	Forced Heat & Cool
	Heat Pump
	No Heating/Cooling

	Central Air
	Wood Furnace

(12) Electric

150	Amps Service

No./Qual. of Fixtures

	Ex.	X	Ord.		Min

No. of Elec. Outlets

	Many	X	Ave.		Few

(13) Plumbing

	Average Fixture(s)
1	3 Fixture Bath
	2 Fixture Bath
	Softener, Auto
	Softener, Manual
	Solar Water Heat
	No Plumbing
	Extra Toilet
	Extra Sink
	Separate Shower
	Ceramic Tile Floor
	Ceramic Tile Wains
	Ceramic Tub Alcove
	Vent Fan

(14) Water/Sewer

	Public Water
	Public Sewer
1	Water Well
1	1000 Gal Septic
	2000 Gal Septic

Lump Sum Items:

(15) Built-ins

	Appliance Allow.
	Cook Top
	Dishwasher
	Garbage Disposal
	Bath Heater
	Vent Fan
	Hot Tub
	Unvented Hood
	Vented Hood
	Intercom
	Jacuzzi Tub
	Jacuzzi repl.Tub
	Oven
	Microwave
	Standard Range
	Self Clean Range
	Sauna
	Trash Compactor
	Central Vacuum
	Security System

(15) Fireplaces

	Interior 1 Story
	Interior 2 Story
	2nd/Same Stack
	Two Sided
	Exterior 1 Story
	Exterior 2 Story
	Prefab 1 Story
	Prefab 2 Story
	Heat Circulator
	Raised Hearth
	Wood Stove
	Direct-Vented Gas

Class: CD
Effec. Age: 60
Floor Area: 1,172
Total Base New : 151,557 E.C.F.
Total Depr Cost: 51,090 X 1.297
Estimated T.C.V: 66,264

(16) Porches/Decks

Area	Type
160	WCP (1 Story)
48	WPP
36	4in Concrete

(17) Garage

Year Built:
Car Capacity:
Class:
Exterior:
Brick Ven.:
Stone Ven.:
Common Wall:
Foundation:
Finished ?:
Auto. Doors:
Mech. Doors:
Area:
% Good:
Storage Area:
No Conc. Floor:

Bsmnt Garage:

Carport Area:
Roof:

Cost Est. for Res. Bldg: 1 Single Family PLAIN Cls CD Blt 0
(11) Heating System: Forced Air w/ Ducts
Ground Area = 884 SF Floor Area = 1172 SF.
Phy/Ab.Phy/Func/Econ/Comb. % Good=45/100/100/100/45
Building Areas

Stories	Exterior	Foundation	Size	Cost New	Depr. Cost	
1 Story	Siding	Crawl Space	596			*2
2 Story	Siding	Crawl Space	288			
			Total:	132,948	46,252	

Other Additions/Adjustments

Water/Sewer			
1000 Gal Septic	1	4,582	1,191
Water Well, 100 Feet	1	5,680	1,477
Porches			
WCP (1 Story)	160	6,243	1,623
WPP	48	1,838	478
4in Concrete	36	266	69
	Totals:	151,557	51,090

Notes:
ECF (RESIDENTIAL) 1.297 => TCV: 66,264

*** Information herein deemed reliable but not guaranteed***

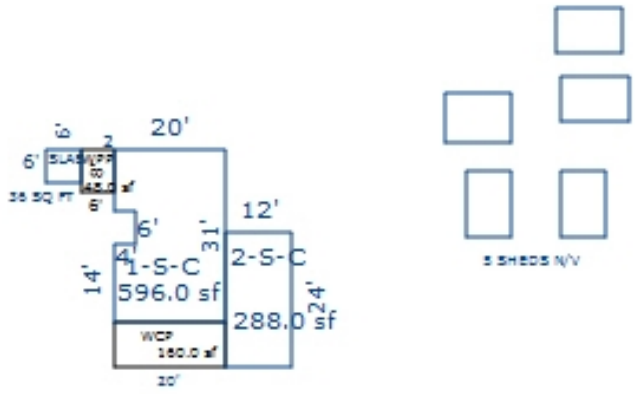

Sketch by Apex Sketch

*** Information herein deemed reliable but not guaranteed***

Parcel Number: 2410-31-4304 Jurisdiction: GREENWOOD TWP County: WEXFORD Printed on 02/15/2024

Grantor	Grantee	Sale Price	Sale Date	Inst. Type	Terms of Sale	Liber & Page	Verified By	Prcnt. Trans.
HITTS, JAMES B	MI ELECTRIC & CONTROLS LLC	1	06/16/2022	QC	21-NOT USED/OTHER	693/721	DEED	0.0
HITTS, MARIAN L	HITTS, JAMES B	0	02/08/2013	QC	09-FAMILY	655/2831	DEED	0.0
HITTS, JAMES B	HITTS, MARIAN L	0	01/09/2013	QC	09-FAMILY	654/2628	DEED	0.0
FISCHER, TERESA	HITTS, LEWIS B JR	12,000	10/17/2008	QC	21-NOT USED/OTHER	631/2252	DEED	0.0

Property Address

515 E 14 RD

Owner's Name/Address

MI ELECTRIC & CONTROLS LLC
515 E 14 RD
MANTON MI 49663

Tax Description

W 88 FT OF W 16 RDS OF S 20 RDS OF W 1/2 OF SE 1/4 --.63 A. M/L-- GW. SEC. 31 T24N R10W -MESICK-

Comments/Influences

Class: RESIDENTIAL-IMPROV Zoning:

School: MESICK CONSOLIDATED SCH DIST

P.R.E. 0%

:

2024 Est TCV 35,566 TCV/TFA: 39.69

Building Permit(s)	Date	Number	Status
Mechanical	09/28/2011	PM11-11561	
RESIDENTIAL - REMODEL	09/30/2005	PM8670	

X Improved | Vacant

	Public Improvements
	Dirt Road
X	Gravel Road
	Paved Road
	Storm Sewer
	Sidewalk
	Water
	Sewer
X	Electric
	Gas
	Curb
	Street Lights
	Standard Utilities
	Underground Utils.

	Topography of Site
	Level
X	Rolling
	Low
	High
	Landscaped
	Swamp
	Wooded
	Pond
	Waterfront
	Ravine
	Wetland
	Flood Plain
X	OPEN

Who	When	What
GLA	05/11/2020	INSPECTION
GLA	07/10/2019	INSPECTION
GLA	07/10/2019	INSPECTION

Land Value Estimates for Land Table 4010.LAND VALUES

Description	Frontage	Depth	* Factors * Front	Depth	Rate	%Adj.	Reason	Value
	88.00	312.00	1.0000	0.0000	0	100*		0
ACREAGE			0.570 Acres		10,953	100		6,243
ROW			0.060 Acres		0	100		0

* denotes lines that do not contribute to the total acreage calculation.

88 Actual Front Feet, 0.63 Total Acres Total Est. Land Value = 6,243

Land Improvement Cost Estimates

Description	Rate	Size	% Good	Cash Value
Wood Frame	20.48	176	46	1,658

Total Estimated Land Improvements True Cash Value = 1,658

Year	Land Value	Building Value	Assessed Value	Board of Review	Tribunal/ Other	Taxable Value
2024	3,100	14,700	17,800			7,646C
2023	1,700	11,900	13,600			7,282C
2022	1,400	10,000	11,400			6,936C
2021	1,700	8,600	10,300			6,715C

The Equalizer. Copyright (c) 1999 - 2009.
Licensed To: Township of Greenwood, County of Wexford, Michigan

*** Information herein deemed reliable but not guaranteed***

Building Type

	Single Family
X	Mobile Home
	Town Home
	Duplex
	A-Frame

X	Wood Frame

Building Style: PLAIN

Yr Built	Remodeled
0	0

Condition: Good

Room List

	Basement
	1st Floor
	2nd Floor
	Bedrooms

(1) Exterior

	Wood/Shingle
X	Aluminum/Vinyl
	Brick
X	Insulation

(2) Windows

	Many		Large
X	Avg.	X	Avg.
	Few		Small

	Wood Sash
	Metal Sash
X	Vinyl Sash
	Double Hung
	Horiz. Slide
	Casement
	Double Glass
	Patio Doors
X	Storms & Screens

(3) Roof

X	Gable		Gambrel
	Hip		Mansard
	Flat		Shed

X	Asphalt Shingle

Chimney:

(3) Roof (cont.)

	Eavestrough
X	Insulation
0	Front Overhang
0	Other Overhang

(4) Interior

X	Drywall		Plaster
	Paneled		Wood T&G

Trim & Decoration

	Ex	X	Ord		Min

Size of Closets

	Lg	X	Ord		Small

Doors:		Solid	X	H.C.	

(5) Floors

Kitchen:
Other: Linoleum
Other: Carpeted

(6) Ceilings

X	Drywall

(7) Excavation

Basement: 0 S.F.
Crawl: 0 S.F.
Slab: 0 S.F.
Height to Joists: 0.0

(8) Basement

	Conc. Block
	Poured Conc.
	Stone
	Treated Wood
	Concrete Floor

(9) Basement Finish

	Recreation SF
	Living SF
	Walkout Doors (B)
	No Floor SF
	Walkout Doors (A)

(10) Floor Support

Joists:
Unsupported Len:
Cntr.Sup:

(11) Heating/Cooling

X	Gas		Oil		Elec.
	Wood		Coal		Steam

X	Forced Warm Air
	Wall Furnace
	Warm & Cool Air
	Heat Pump

	Central Air
	Wood Furnace

(12) Electric

150	Amps Service

No./Qual. of Fixtures

	Ex.	X	Ord.		Min

No. of Elec. Outlets

	Many	X	Ave.		Few

(13) Plumbing

1	Average Fixture(s)
	3 Fixture Bath
	2 Fixture Bath
	Softener, Auto
	Softener, Manual
	Solar Water Heat
	No Plumbing
	Extra Toilet
	Extra Sink
	Separate Shower
	Ceramic Tile Floor
	Ceramic Tile Wains
	Ceramic Tub Alcove
	Vent Fan

(14) Water/Sewer

	Public Water
	Public Sewer
1	Water Well
1	1000 Gal Septic
	2000 Gal Septic

Lump Sum Items:

(15) Built-ins

	Appliance Allow.
	Cook Top
	Dishwasher
	Garbage Disposal
	Bath Heater
	Vent Fan
	Hot Tub
	Unvented Hood
	Vented Hood
	Intercom
	Jacuzzi Tub
	Jacuzzi repl.Tub
	Oven
	Microwave
	Standard Range
	Self Clean Range
	Sauna
	Trash Compactor
	Central Vacuum
	Security System

(15) Fireplaces

	Interior 1 Story
	Interior 2 Story
	2nd/Same Stack
	Two Sided
	Exterior 1 Story
	Exterior 2 Story
	Prefab 1 Story
	Prefab 2 Story
	Heat Circulator
	Raised Hearth
	Wood Stove
	Direct-Vented Gas

Class: Fair
Effec. Age: 25
Floor Area:
Total Base New : 60,938 E.C.F.
Total Depr Cost: 21,330 X 1.297
Estimated T.C.V: 27,665

(16) Porches/Decks

Area	Type
56	WCP (1 Story)

(17) Garage

Year Built:
Car Capacity:
Class:
Exterior:
Brick Ven.:
Stone Ven.:
Common Wall:
Foundation:
Finished ?:
Auto. Doors:
Mech. Doors:
Area:
% Good:
Storage Area:
No Conc. Floor:

Bsmnt Garage:

Carport Area:
Roof:

Cost Est. for Res. Bldg: 1 Mobile Home PLAIN Cls Fair Blt 0
(11) Heating System: Wall Furnace
Ground Area = 896 SF Floor Area = 896 SF.
Phy/Ab.Phy/Func/Econ/Comb. % Good=35/100/100/100/35
Building Areas

Type	Ext. Walls	Roof/Fnd.	Size	Cost New	Depr. Cost
Main Home	Ribbed	Metal	896		
			Total:	46,386	16,236
Other Additions/Adjustments					
Skirting, Metal or Vinyl, Vertical			134	1,494	523
Water/Sewer					
1000 Gal Septic			1	4,582	1,604
Water Well, 100 Feet			1	5,680	1,988
Porches					
WCP (1 Story)			56	2,796	979
			Totals:	60,938	21,330

Notes:

ECF (RESIDENTIAL) 1.297 => TCV: 27,665

*** Information herein deemed reliable but not guaranteed***

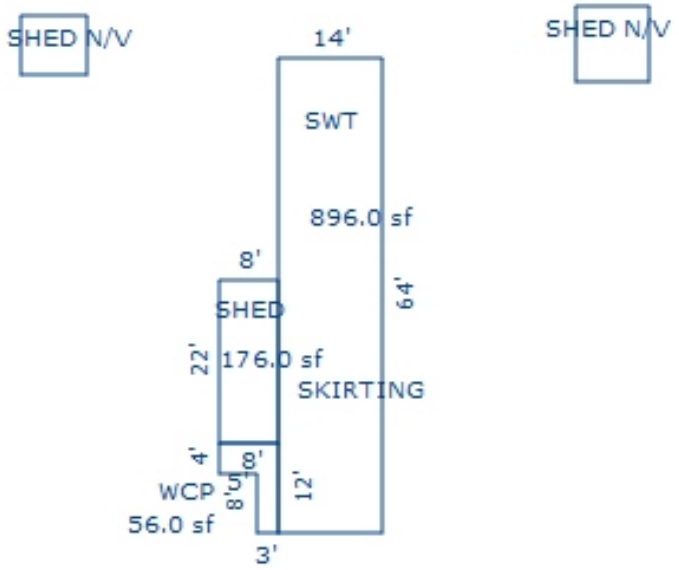

Sketch by Apex Sketch

*** Information herein deemed reliable but not guaranteed***

Parcel Number: 2410-31-4401 Jurisdiction: GREENWOOD TWP County: WEXFORD Printed on 02/15/2024

Grantor	Grantee	Sale Price	Sale Date	Inst. Type	Terms of Sale	Liber & Page	Verified By	Prcnt. Trans.
FLINT, MICHAEL G.TRUST	FLINT, MICHAEL G & CONNIE	0	11/02/2017	QC	21-NOT USED/OTHER		DEED	0.0
GRAHAM, GUY	KURETICH, RUDOLPH J.'	59,900	09/11/1987	WD	03-ARM'S LENGTH	309:625	DEED	0.0

Property Address

Owner's Name/Address

FLINT, MICHAEL G & CONNIE M
1009 E 14 RD
MANTON MI 49663

Tax Description

E 24 RDS OF SE 1/4 OF SE 1/4 EXC E 17 RDS OF S 12 RDS --10.64 A M/L-- GW. SEC. 31 T24N R10W -MESICK-

Comments/Influences

Class: RESIDENTIAL-VACANT Zoning:

School: MESICK CONSOLIDATED SCH DIST

P.R.E. 100% / /

:

2024 Est TCV 46,532

Building Permit(s)	Date	Number	Status
RESIDENTIAL - REMODEL	09/18/1998	PB8646	

	Improved	X	Vacant

	Public Improvements
X	Dirt Road
X	Gravel Road
	Paved Road
	Storm Sewer
	Sidewalk
	Water
	Sewer
X	Electric
	Gas
	Curb
	Street Lights
	Standard Utilities
	Underground Utils.

	Topography of Site
	Level
X	Rolling
	Low
	High
	Landscaped
	Swamp
X	Wooded
	Pond
	Waterfront
	Ravine
	Wetland
	Flood Plain
X	OPEN/PINES

Who	When	What
GLA	05/11/2020	INSPECTION
GLA	07/10/2019	INSPECTION
GLA	07/10/2019	INSPECTION

Land Value Estimates for Land Table 4010.LAND VALUES

Description	Frontage	Depth	* Factors * Front	Depth	Rate	%Adj.	Reason	Value
ACREAGE			10.550 Acres		4,411	100		46,532
ROW			0.090 Acres		0	100		0
			10.64 Total Acres		Total Est. Land Value =			46,532

Year	Land Value	Building Value	Assessed Value	Board of Review	Tribunal/ Other	Taxable Value
2024	23,300	0	23,300			10,452C
2023	13,700	0	13,700			9,955C
2022	12,600	0	12,600			9,481C
2021	12,700	0	12,700			9,179C

The Equalizer. Copyright (c) 1999 - 2009.
Licensed To: Township of Greenwood, County of Wexford, Michigan

*** Information herein deemed reliable but not guaranteed***

Parcel Number: 2410-31-4402 Jurisdiction: GREENWOOD TWP County: WEXFORD Printed on 02/15/2024

Grantor	Grantee	Sale Price	Sale Date	Inst. Type	Terms of Sale	Liber & Page	Verified By	Prcnt. Trans.

Property Address	Class: RESIDENTIAL-VACANT	Zoning:	Building Permit(s)	Date	Number	Status
	School: MESICK CONSOLIDATED SCH DIST					
Owner's Name/Address	P.R.E. 0%					
	:					
MACDONALD, C. ROSS & MARGARET TRUST 29740 TROPEA WARREN MI 48092	2024 Est TCV 11,610					

	Improved	X	Vacant

	Public Improvements
X	Dirt Road
X	Gravel Road
	Paved Road
	Storm Sewer
	Sidewalk
	Water
	Sewer
X	Electric
	Gas
	Curb
	Street Lights
	Standard Utilities
	Underground Utils.

	Topography of Site
X	Level
X	Rolling
	Low
	High
	Landscaped
	Swamp
	Wooded
	Pond
	Waterfront
	Ravine
	Wetland
	Flood Plain

Tax Description

E 17 RDS OF S 12 RDS OF SE 1/4 OF SE 1/4 --1.27 A M/L-- GW. SEC. 31 T24N R10W -MESICK-

Comments/Influences

Who	When	What
GLA	05/11/2020	INSPECTION
GLA	07/10/2019	INSPECTION
GLA	07/10/2019	INSPECTION

Land Value Estimates for Land Table 4010.LAND VALUES

Description	Frontage	Depth	* Factors * Front	Depth	Rate	%Adj.	Reason	Value
HELSEL RIV LOW	280.00	198.00	1.0000	0.0000	315	100*		0
ACREAGE			1.060 Acres		10,953	100		11,610
ROW			0.210 Acres		0	100		0

* denotes lines that do not contribute to the total acreage calculation.

280 Actual Front Feet, 1.27 Total Acres Total Est. Land Value = 11,610

Year	Land Value	Building Value	Assessed Value	Board of Review	Tribunal/ Other	Taxable Value
2024	5,800	0	5,800			2,551C
2023	3,200	0	3,200			2,430C
2022	2,700	0	2,700			2,315C
2021	3,200	0	3,200			2,242C

The Equalizer. Copyright (c) 1999 - 2009. Licensed To: Township of Greenwood, County of Wexford, Michigan

*** Information herein deemed reliable but not guaranteed***

Parcel Number: 2410-31-4403 Jurisdiction: GREENWOOD TWP County: WEXFORD Printed on 02/15/2024

Grantor	Grantee	Sale Price	Sale Date	Inst. Type	Terms of Sale	Liber & Page	Verified By	Prcnt. Trans.
SPENCER, DAVID C. & TAMMY	SPENCER, TAMMY TRUST	0	04/19/2012	QC	14-INTO/OUT OF TRUST	647/2341	DEED	0.0
LONEY, ALFRED 10%	SPENCER, DAVID	50,000	06/13/1986	LC	03-ARM'S LENGTH	301:969	DEED	0.0

Property Address

801 E 14 RD

Owner's Name/Address

SPENCER, TAMMY TRUST
801 E 14 RD
MANTON MI 49663

Tax Description

W 20 RDS OF SE 1/4 OF SE 1/4 10 A. GW. SEC. 31 T24N R10W -MESICK-

Comments/Influences

Class: RESIDENTIAL-IMPROV Zoning:

School: MESICK CONSOLIDATED SCH DIST

P.R.E. 100% / /

:

2024 Est TCV 334,819 TCV/TFA: 185.60

Building Permit(s)	Date	Number	Status
Pole Barn	09/24/2014	PB14--0265	COMPLETE
RESIDENTIAL - NEW	12/18/2002	PM6462	
COMMERCIAL - REMODEL	08/20/2002	PP2739	
RESIDENTIAL - REMODEL	08/14/2002	PE14698	

X Improved | Vacant

Public Improvements

- Dirt Road
- Gravel Road
- Paved Road
- Storm Sewer
- Sidewalk
- Water
- Sewer
- Electric
- Gas
- Curb
- Street Lights
- Standard Utilities
- Underground Utils.

Topography of Site

- Level
- Rolling
- Low
- High
- Landscaped
- Swamp
- Wooded
- Pond
- Waterfront
- Ravine
- Wetland
- Flood Plain

Who	When	What
GLA	05/11/2020	INSPECTION
GLA	07/10/2019	INSPECTION
GLA	07/10/2019	INSPECTION

Land Value Estimates for Land Table 4010.LAND VALUES

Description	Frontage	Depth	* Factors * Front	Depth	Rate	%Adj.	Reason	Value
ACREAGE			9.740 Acres		4,665	100		45,434
ROW			0.260 Acres		0	100		0
			10.00 Total Acres		Total Est. Land Value =			45,434

Land Improvement Cost Estimates

Description	Rate	Size	% Good	Cash Value
D/W/P: 3.5 Concrete	6.63	6735	50	22,326
Total Estimated Land Improvements True Cash Value =				22,326

Year	Land Value	Building Value	Assessed Value	Board of Review	Tribunal/ Other	Taxable Value
2024	22,700	144,700	167,400			89,445C
2023	12,900	120,300	133,200			85,186C
2022	11,900	103,000	114,900			81,130C
2021	12,000	104,200	116,200			78,539C

The Equalizer. Copyright (c) 1999 - 2009. Licensed To: Township of Greenwood, County of Wexford, Michigan

*** Information herein deemed reliable but not guaranteed***

Building Type

X	Single Family
	Mobile Home
	Town Home
	Duplex
	A-Frame
X	Wood Frame

Building Style: PLAIN

Yr Built	Remodeled
0	0

Condition: Average

Room List

	Basement
	1st Floor
	2nd Floor
	Bedrooms

(1) Exterior

	Wood/Shingle
X	Aluminum/Vinyl
	Brick
X	Insulation

(2) Windows

	Many		Large
X	Avg.	X	Avg.
	Few		Small

	Wood Sash
	Metal Sash
X	Vinyl Sash
	Double Hung
	Horiz. Slide
	Casement
	Double Glass
	Patio Doors
X	Storms & Screens

(3) Roof

X	Gable		Gambrel
	Hip		Mansard
	Flat		Shed

X	Asphalt Shingle

Chimney:

(3) Roof (cont.)

	Eavestrough
X	Insulation
0	Front Overhang
0	Other Overhang

(4) Interior

X	Drywall		Plaster
	Paneled		Wood T&G

Trim & Decoration

	Ex	X	Ord		Min

Size of Closets

	Lg	X	Ord		Small

Doors:		Solid	X	H.C.	

(5) Floors

Kitchen:
Other: Linoleum
Other: Carpeted

(6) Ceilings

X	Drywall		

(7) Excavation

Basement: 1232 S.F.
Crawl: 572 S.F.
Slab: 0 S.F.
Height to Joists: 0.0

(8) Basement

	Conc. Block
	Poured Conc.
	Stone
	Treated Wood
	Concrete Floor

(9) Basement Finish

	Recreation	SF
1132	Living	SF
1	Walkout Doors (B)	
	No Floor	SF
	Walkout Doors (A)	

(10) Floor Support

Joists:
Unsupported Len:
Cntr.Sup:

(11) Heating/Cooling

X	Gas		Oil		Elec.
	Wood		Coal		Steam

	Forced Air w/o Ducts
X	Forced Air w/ Ducts
	Forced Hot Water
	Electric Baseboard
	Elec. Ceil. Radiant
	Radiant (in-floor)
	Electric Wall Heat
	Space Heater
	Wall/Floor Furnace
	Forced Heat & Cool
	Heat Pump
	No Heating/Cooling

	Central Air
	Wood Furnace

(12) Electric

150	Amps Service

No./Qual. of Fixtures

	Ex.	X	Ord.		Min

No. of Elec. Outlets

	Many	X	Ave.		Few

(13) Plumbing

	Average Fixture(s)
2	3 Fixture Bath
1	2 Fixture Bath
	Softener, Auto
	Softener, Manual
	Solar Water Heat
	No Plumbing
	Extra Toilet
	Extra Sink
	Separate Shower
	Ceramic Tile Floor
	Ceramic Tile Wains
	Ceramic Tub Alcove
	Vent Fan

(14) Water/Sewer

	Public Water
	Public Sewer
1	Water Well
1	1000 Gal Septic
	2000 Gal Septic

Lump Sum Items:

(15) Built-ins

	Appliance Allow.
	Cook Top
	Dishwasher
	Garbage Disposal
	Bath Heater
	Vent Fan
	Hot Tub
	Unvented Hood
	Vented Hood
	Intercom
	Jacuzzi Tub
	Jacuzzi repl.Tub
	Oven
	Microwave
	Standard Range
	Self Clean Range
	Sauna
	Trash Compactor
	Central Vacuum
	Security System

(15) Fireplaces

	Interior 1 Story
	Interior 2 Story
	2nd/Same Stack
	Two Sided
	Exterior 1 Story
	Exterior 2 Story
	Prefab 1 Story
	Prefab 2 Story
	Heat Circulator
	Raised Hearth
	Wood Stove
	Direct-Vented Gas

Class: CD
Effec. Age: 50
Floor Area: 1,804
Total Base New : 411,819 E.C.F.
Total Depr Cost: 205,905 X 1.297
Estimated T.C.V: 267,059

(16) Porches/Decks

Area	Type
630	WPP
179	WCP (1 Story)
300	WPP
266	Brzwy, FW

(17) Garage

Year Built:
Car Capacity:
Class: CD
Exterior: Siding
Brick Ven.: 0
Stone Ven.: 0
Common Wall: 1/2 Wal
Foundation: 42 Inch
Finished ?:
Auto. Doors: 0
Mech. Doors: 0
Area: 1200
% Good: 0
Storage Area: 0
No Conc. Floor: 0

Bsmnt Garage:

Carport Area:
Roof:

Cost Est. for Res. Bldg: 1 Single Family PLAIN Cls CD Blt 0
(11) Heating System: Forced Air w/ Ducts
Ground Area = 1804 SF Floor Area = 1804 SF.
Phy/Ab.Phy/Func/Econ/Comb. % Good=50/100/100/100/50
Building Areas

Stories	Exterior	Foundation	Size	Cost New	Depr. Cost
1 Story	Siding	Basement	1,232		
1 Story	Siding	Crawl Space	572		
			Total:	216,987	108,491
Other Additions/Adjustments					
Basement Living Area			1132	38,114	19,057
Basement, Outside Entrance, Below Grade			1	2,176	1,088
Plumbing					
3 Fixture Bath			1	3,887	1,943
2 Fixture Bath			1	2,614	1,307
Water/Sewer					
1000 Gal Septic			1	4,582	2,291
Water Well, 100 Feet			1	5,680	2,840
Porches					
WPP			630	9,343	4,671
WCP (1 Story)			179	6,752	3,376
WPP			300	4,494	2,247
Garages					
Class: CD Exterior: Siding Foundation: 42 Inch (Unfinished)					
Common Wall: 1/2 Wall			1	-1,261	-630
Base Cost			1200	38,700	19,350
Class: CD Exterior: Pole (Unfinished)					
Base Cost			1825	39,694	19,847
No Concrete Floor			1825	-11,224	-5,612
Class: D Exterior: Pole (Unfinished)					

<<<<< Calculations too long. See Valuation printout for complete pricing. >>>>>

*** Information herein deemed reliable but not guaranteed***

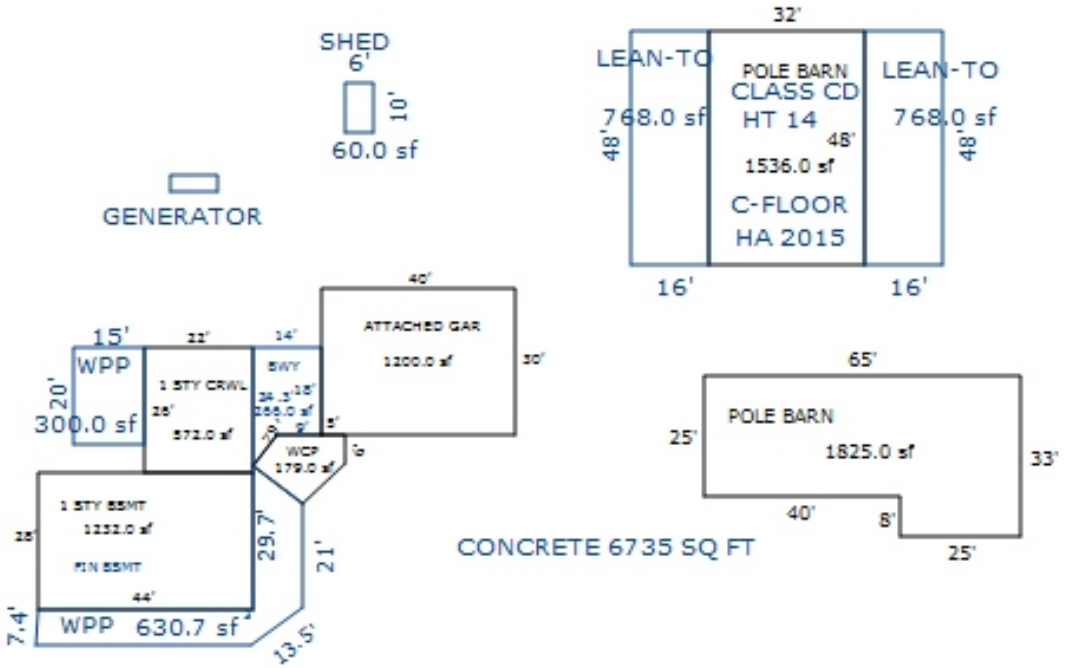

Sketch by Apex Sketch

*** Information herein deemed reliable but not guaranteed***

Parcel Number: 2410-32-1101 Jurisdiction: GREENWOOD TWP County: WEXFORD Printed on 02/15/2024

Grantor	Grantee	Sale Price	Sale Date	Inst. Type	Terms of Sale	Liber & Page	Verified By	Prcnt. Trans.

Property Address	Class: AGRICULTURAL-VACAN	Zoning:	Building Permit(s)	Date	Number	Status
	School: MANTON CONSOLIDATED SCHOOLS					
Owner's Name/Address	P.R.E. 0%					
	:					
STATE OF MICHIGAN P O BOX 30735 GRANTS ADMINISTRATION LANSING MI 48909-8235	2024 Est TCV 0					

Improved | X | Vacant

Land Value Estimates for Land Table 4010.LAND VALUES

Description	Frontage	Depth	* Factors * Front	Depth	Rate	%Adj.	Reason	Value
ACREAGE			318.000 Acres		2,480	100		788,640
ROW			2.000 Acres		0	100		0
			320.00 Total Acres		Total Est. Land Value =			788,640

Public Improvements

	Dirt Road
X	Gravel Road
	Paved Road
	Storm Sewer
	Sidewalk
	Water
	Sewer
X	Electric
	Gas
	Curb
	Street Lights
	Standard Utilities
	Underground Utils.

Topography of Site

X	Level
X	Rolling
X	Low
X	High
	Landscaped
X	Swamp
X	Wooded
	Pond
	Waterfront
	Ravine
	Wetland
	Flood Plain
X	PINES/OPEN

Tax Description

N 1/2 EXC SE 1/4 OF NE 1/4; & NW 1/4 OF SW 1/4 --320 A. GW. SEC. 32 T24N R10W -MANTON-

Comments/Influences

Who	When	What
GLA	05/11/2020	INSPECTION
GLA	07/10/2019	INSPECTION
GLA	07/10/2019	INSPECTION

Year	Land Value	Building Value	Assessed Value	Board of Review	Tribunal/ Other	Taxable Value
2024	EXEMPT	EXEMPT	EXEMPT			EXEMPT
2023	EXEMPT	EXEMPT	EXEMPT			EXEMPT
2022	0	0	0			0
2021	0	0	0			0

The Equalizer. Copyright (c) 1999 - 2009.
Licensed To: Township of Greenwood, County of Wexford, Michigan

*** Information herein deemed reliable but not guaranteed***

Parcel Number: 2410-32-1401 Jurisdiction: GREENWOOD TWP County: WEXFORD Printed on 02/15/2024

Grantor	Grantee	Sale Price	Sale Date	Inst. Type	Terms of Sale	Liber & Page	Verified By	Prcnt. Trans.
FENTON, GREGORY M & SONG H	STATE OF MICHIGAN DONR	64,000	09/14/2023	WD	21-NOT USED/OTHER	696/446	PROPERTY TRANSFER	100.0
FENTON, MERLE R & MARIAN L	FENTON, GREGORY M	0	05/02/2017	OTH	14-INTO/OUT OF TRUST	680/704	DEED	0.0
FENTON, GREGORY M	FENTON, GREGORY M & SONG H	0	05/02/2017	QC	14-INTO/OUT OF TRUST	680/706	DEED	0.0
FENTON, MERLE	FENTON, MERLE R & MARIAN I	0	01/28/2011	QC	18-LIFE ESTATE	636/2687	DEED	0.0

Property Address

Owner's Name/Address

STATE OF MICHIGAN DONR
525 W ALLEGAN ST P.O BOX 30448
LANSING MI 48909-7528

Tax Description

SE 1/4 OF NE 1/4 40 A. GW. SEC. 32 T24N R10W -MANTON-

Comments/Influences

The Equalizer. Copyright (c) 1999 - 2009. Licensed To: Township of Greenwood, County of Wexford, Michigan

Class: RESIDENTIAL-VACANT Zoning:

School: MANTON CONSOLIDATED SCHOOLS

P.R.E. 0%

:

2024 Est TCV 0

Building Permit(s)	Date	Number	Status

Improved | X | Vacant

Public Improvements

- X Dirt Road
- X Gravel Road
- Paved Road
- Storm Sewer
- Sidewalk
- Water
- Sewer
- X Electric
- Gas
- Curb
- Street Lights
- Standard Utilities
- Underground Utils.

Topography of Site

- X Level
- X Rolling
- X Low
- X High
- Landscaped
- X Swamp
- X Wooded
- Pond
- Waterfront
- Ravine
- Wetland
- Flood Plain
- X PINES/OPEN

Who	When	What
GLA	05/11/2020	INSPECTION
GLA	07/10/2019	INSPECTION
GLA	07/10/2019	INSPECTION

Land Value Estimates for Land Table 4010.LAND VALUES

Description	Frontage	Depth	* Factors * Front	Depth	Rate	%Adj.	Reason	Value
ACREAGE			40.000 Acres		2,722	100		108,880
			40.00 Total Acres		Total Est. Land Value =			108,880

Year	Land Value	Building Value	Assessed Value	Board of Review	Tribunal/ Other	Taxable Value
2024	EXEMPT	EXEMPT	EXEMPT			EXEMPT
2023	48,000	0	48,000			11,380C
2022	38,000	0	38,000			10,839C
2021	34,000	0	34,000			10,493C

*** Information herein deemed reliable but not guaranteed***

Parcel Number: 2410-32-3101 Jurisdiction: GREENWOOD TWP County: WEXFORD Printed on 02/15/2024

Grantor	Grantee	Sale Price	Sale Date	Inst. Type	Terms of Sale	Liber & Page	Verified By	Prcnt. Trans.
RUMSEY, DENNIS & LYNN A	RUMSEY FAMILY TRUST	0	08/21/2008	WD	09-FAMILY	614/293	DEED	0.0
RUMSEY, H WILLIAM & CAROL	RUMSEY, DENNIS & LYNN A	0	07/30/2008	QC	21-NOT USED/OTHER	613/2365	DEED	0.0

Property Address
6260 N 27 RD

Owner's Name/Address
RUMSEY FAMILY TRUST
13850 SHAVEHEAD LAKE ST
VANDALIA MI 49095

Tax Description
NE 1/4 OF SW 1/4 & NW 1/4 OF SE 1/4 80 A. GW. SEC. 32 T24N R10W -MESICK-

Comments/Influences

Class: RESIDENTIAL-IMPROV Zoning:
School: MESICK CONSOLIDATED SCH DIST
P.R.E. 0%
:
2024 Est TCV 256,287 TCV/TFA: 388.31

Building Permit(s)	Date	Number	Status

X Improved | Vacant

	Public Improvements
	Dirt Road
X	Gravel Road
	Paved Road
	Storm Sewer
	Sidewalk
	Water
	Sewer
X	Electric
	Gas
	Curb
	Street Lights
	Standard Utilities
	Underground Utils.

	Topography of Site
X	Level
X	Rolling
X	Low
X	High
	Landscaped
X	Swamp
X	Wooded
	Pond
	Waterfront
	Ravine
	Wetland
	Flood Plain
X	PINES/OPEN

Who When What
GLA 05/11/2020 INSPECTION
GLA 07/10/2019 INSPECTION
GLA 07/10/2019 INSPECTION

The Equalizer. Copyright (c) 1999 - 2009. Licensed To: Township of Greenwood, County of Wexford, Michigan

Land Value Estimates for Land Table 4010.LAND VALUES

Description	Frontage	Depth	* Factors * Front	Depth	Rate	%Adj.	Reason	Value
ACREAGE			79.900 Acres		2,541	100		203,016
ROW			0.100 Acres		0	100		0
			80.00 Total Acres		Total Est. Land Value =			203,016

Land Improvement Cost Estimates

Description	Rate	Size	% Good	Cash Value
D/W/P: Patio Blocks	13.19	60	46	364
D/W/P: Patio Blocks	13.19	10	46	61
Total Estimated Land Improvements True Cash Value =				425

Year	Land Value	Building Value	Assessed Value	Board of Review	Tribunal/ Other	Taxable Value
2024	101,500	26,600	128,100			40,459C
2023	85,600	21,400	107,000			38,533C
2022	67,900	17,900	85,800			36,699C
2021	61,900	17,900	79,800			35,527C

*** Information herein deemed reliable but not guaranteed***

Building Type

X	Single Family
	Mobile Home
	Town Home
	Duplex
	A-Frame
X	Wood Frame

Building Style: PLAIN

Yr Built	Remodeled
0	1961

Condition: Fair

Room List

	Basement
	1st Floor
	2nd Floor
	Bedrooms

(1) Exterior

	Wood/Shingle
	Aluminum/Vinyl
	Brick
X	Vinyl
X	Insulation

(2) Windows

X	Many Avg. Few	X	Large Avg. Small

X	Wood Sash
	Metal Sash
	Vinyl Sash
X	Double Hung
	Horiz. Slide
	Casement
	Double Glass
	Patio Doors
X	Storms & Screens

(3) Roof

X	Gable		Gambrel
	Hip		Mansard
	Flat		Shed

X	Asphalt Shingle

Chimney: Block

(3) Roof (cont.)

	Eavestrough
X	Insulation
0	Front Overhang
0	Other Overhang

(4) Interior

	Drywall Paneled		Plaster Wood T&G

Trim & Decoration

	Ex		Ord		Min

Size of Closets

	Lg		Ord		Small

Doors:		Solid		H.C.	

(5) Floors

Kitchen:
Other:
Other:

(6) Ceilings

(7) Excavation

Basement: 0 S.F.
Crawl: 0 S.F.
Slab: 660 S.F.
Height to Joists: 0.0

(8) Basement

	Conc. Block
	Poured Conc.
	Stone
	Treated Wood
	Concrete Floor

(9) Basement Finish

	Recreation SF
	Living SF
	Walkout Doors (B)
	No Floor SF
	Walkout Doors (A)

(10) Floor Support

Joists:
Unsupported Len:
Cntr.Sup:

(11) Heating/Cooling

X	Gas		Oil		Elec.
	Wood		Coal		Steam

	Forced Air w/o Ducts
X	Forced Air w/ Ducts
	Forced Hot Water
	Electric Baseboard
	Elec. Ceil. Radiant
	Radiant (in-floor)
	Electric Wall Heat
	Space Heater
	Wall/Floor Furnace
	Forced Heat & Cool
	Heat Pump
	No Heating/Cooling

	Central Air
	Wood Furnace

(12) Electric

100	Amps Service

No./Qual. of Fixtures

	Ex.		Ord.		Min

No. of Elec. Outlets

	Many		Ave.		Few

(13) Plumbing

1	Average Fixture(s)
	3 Fixture Bath
	2 Fixture Bath
	Softener, Auto
	Softener, Manual
	Solar Water Heat
	No Plumbing
	Extra Toilet
	Extra Sink
	Separate Shower
	Ceramic Tile Floor
	Ceramic Tile Wains
	Ceramic Tub Alcove
	Vent Fan

(14) Water/Sewer

	Public Water
	Public Sewer
1	Water Well
1	1000 Gal Septic
	2000 Gal Septic

Lump Sum Items:

(15) Built-ins

	Appliance Allow.
	Cook Top
	Dishwasher
	Garbage Disposal
	Bath Heater
	Vent Fan
	Hot Tub
	Unvented Hood
	Vented Hood
	Intercom
	Jacuzzi Tub
	Jacuzzi repl.Tub
	Oven
	Microwave
	Standard Range
	Self Clean Range
	Sauna
	Trash Compactor
	Central Vacuum
	Security System

(15) Fireplaces

	Interior 1 Story
	Interior 2 Story
	2nd/Same Stack
	Two Sided
	Exterior 1 Story
	Exterior 2 Story
	Prefab 1 Story
	Prefab 2 Story
	Heat Circulator
	Raised Hearth
	Wood Stove
	Direct-Vented Gas

Class: CD
Effec. Age: 62
Floor Area: 660
Total Base New : 90,545 E.C.F.
Total Depr Cost: 40,745 X 1.297
Estimated T.C.V: 52,846

(16) Porches/Decks

Area	Type
15	4in Concrete

(17) Garage

Year Built:
Car Capacity:
Class:
Exterior:
Brick Ven.:
Stone Ven.:
Common Wall:
Foundation:
Finished ?:
Auto. Doors:
Mech. Doors:
Area:
% Good:
Storage Area:
No Conc. Floor:

Bsmnt Garage:

Carport Area:
Roof:

Cost Est. for Res. Bldg: 1 Single Family PLAIN Cls CD Blt 0
(11) Heating System: Forced Air w/ Ducts
Ground Area = 660 SF Floor Area = 660 SF.
Phy/Ab.Phy/Func/Econ/Comb. % Good=45/100/100/100/45
Building Areas

Stories	Exterior	Foundation	Size	Cost New	Depr. Cost
1 Story	Siding	Slab	660		
			Total:	80,172	36,077
Other Additions/Adjustments					
Water/Sewer					
1000 Gal Septic			1	4,582	2,062
Water Well, 100 Feet			1	5,680	2,556
Porches					
4in Concrete			15	111	50
			Totals:	90,545	40,745

Notes:
ECF (RESIDENTIAL) 1.297 => TCV: 52,846

*** Information herein deemed reliable but not guaranteed***

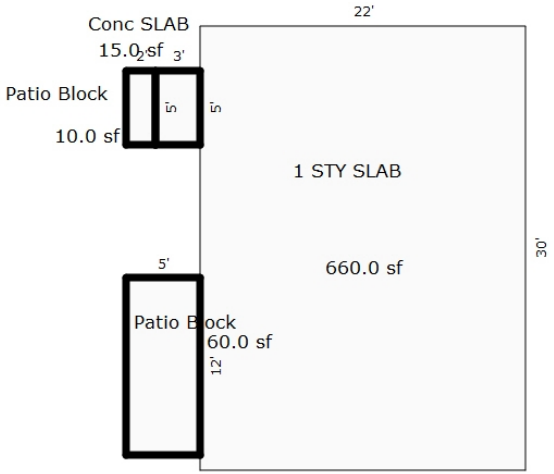

Sketch by Apex Sketch

*** Information herein deemed reliable but not guaranteed***

Parcel Number: 2410-32-3301 Jurisdiction: GREENWOOD TWP County: WEXFORD Printed on 02/15/2024

Grantor	Grantee	Sale Price	Sale Date	Inst. Type	Terms of Sale	Liber & Page	Verified By	Prcnt. Trans.
FLINT, MICHAEL G. TRUST	FLINT, MICHAEL G & CONNIE	0	11/02/2017	QC	21-NOT USED/OTHER	681 /1222	DEED	0.0
KURETICH, RUDOLPH J.	FLINT, MICHAEL & CONNIE	109,500	10/10/1997	LC	03-ARM'S LENGTH	357:476	DEED	0.0
GRAHAM, GUY	KURETICH, RUDOLPH J.	59,900	09/11/1987	WD	03-ARM'S LENGTH	309:625	DEED	0.0

Property Address

1009 E 14 RD

Owner's Name/Address

FLINT, MICHAEL G & CONNIE M
1009 E 14 RD
MANTON MI 49663

Class: RESIDENTIAL-IMPROV Zoning:

School: MESICK CONSOLIDATED SCH DIST

P.R.E. 100% / /

:

2024 Est TCV 546,827 TCV/TFA: 271.24

Building Permit(s)	Date	Number	Status
Pole Barn	07/27/2022	PB22-0208	ENTERED
RESIDENTIAL - NEW	07/16/2003	PM6853	
RESIDENTIAL - NEW	05/20/2003	PP3009	
RESIDENTIAL - REMODEL	04/25/2003	PB11487	

X Improved | Vacant

Tax Description

N 1/2 OF SW 1/4 OF SW 1/4 20 A. GW. SEC. 32 T24N R10W -MESICK-

Comments/Influences

Public Improvements

- X Dirt Road
- X Gravel Road
- Paved Road
- Storm Sewer
- Sidewalk
- Water
- Sewer
- X Electric
- Gas
- Curb
- Street Lights
- Standard Utilities
- Underground Utils.

Topography of Site

- X Level
- X Rolling
- X Low
- X High
- Landscaped
- X Swamp
- X Wooded
- Pond
- Waterfront
- Ravine
- Wetland
- Flood Plain
- X PINES/OPEN

Who	When	What
DB	10/23/2023	INSPECTION
GLA	05/11/2020	INSPECTION
GLA	07/10/2019	INSPECTION

Land Value Estimates for Land Table 4010.LAND VALUES

Description	Frontage	Depth	* Factors * Front	Depth	Rate	%Adj.	Reason	Value
ACREAGE			19.500 Acres		3,200	100		62,400
ROW			0.500 Acres		0	100		0
			20.00 Total Acres		Total Est. Land Value =			62,400

Land Improvement Cost Estimates

Description	Rate	Size	% Good	Cash Value
D/W/P: 3.5 Concrete	6.21	937	79	4,597
Wood Frame	20.22	960	79	15,335
Wood Frame	20.22	576	79	9,201
Total Estimated Land Improvements True Cash Value =				29,133

Year	Land Value	Building Value	Assessed Value	Board of Review	Tribunal/ Other	Taxable Value
2024	31,200	242,200	273,400			190,304C
2023	25,400	207,900	233,300			181,242C
2022	21,500	168,600	190,100			164,136C
2021	19,800	169,500	189,300			158,893C

The Equalizer. Copyright (c) 1999 - 2009.
Licensed To: Township of Greenwood, County of Wexford, Michigan

*** Information herein deemed reliable but not guaranteed***

Building Type

X	Single Family
	Mobile Home
	Town Home
	Duplex
	A-Frame
X	Wood Frame

Building Style: PLAIN

Yr Built	Remodeled
2003	0

Condition: Good

Room List

	Basement
	1st Floor
	2nd Floor
	Bedrooms

(1) Exterior

	Wood/Shingle
X	Aluminum/Vinyl
	Brick
X	Insulation

(2) Windows

X	Many Avg. Few	X	Large Avg. Small

	Wood Sash
	Metal Sash
X	Vinyl Sash
	Double Hung
	Horiz. Slide
	Casement
	Double Glass
	Patio Doors
X	Storms & Screens

(3) Roof

X	Gable		Gambrel
	Hip		Mansard
	Flat		Shed

X	Asphalt Shingle

Chimney:

(3) Roof (cont.)

	Eavestrough
X	Insulation
0	Front Overhang
0	Other Overhang

(4) Interior

X	Drywall Paneled		Plaster Wood T&G

Trim & Decoration

	Ex	X	Ord		Min

Size of Closets

	Lg	X	Ord		Small

Doors:		Solid	X	H.C.	

(5) Floors

Kitchen:
Other: Linoleum
Other: Carpeted

(6) Ceilings

X	Drywall

(7) Excavation

Basement: 1632 S.F.
Crawl: 0 S.F.
Slab: 0 S.F.
Height to Joists: 0.0

(8) Basement

	Conc. Block
	Poured Conc.
	Stone
	Treated Wood
	Concrete Floor

(9) Basement Finish

	Recreation	SF
1388	Living	SF
3	Walkout Doors (B)	
	No Floor	SF
	Walkout Doors (A)	

(10) Floor Support

Joists:
Unsupported Len:
Cntr.Sup:

(11) Heating/Cooling

X	Gas		Oil		Elec.
	Wood		Coal		Steam

	Forced Air w/o Ducts
X	Forced Air w/ Ducts
	Forced Hot Water
	Electric Baseboard
	Elec. Ceil. Radiant
	Radiant (in-floor)
	Electric Wall Heat
	Space Heater
	Wall/Floor Furnace
	Forced Heat & Cool
	Heat Pump
	No Heating/Cooling

	Central Air
	Wood Furnace

(12) Electric

150	Amps Service

No./Qual. of Fixtures

	Ex.	X	Ord.		Min

No. of Elec. Outlets

	Many	X	Ave.		Few

(13) Plumbing

	Average Fixture(s)
2	3 Fixture Bath
	2 Fixture Bath
	Softener, Auto
	Softener, Manual
	Solar Water Heat
	No Plumbing
	Extra Toilet
	Extra Sink
	Separate Shower
	Ceramic Tile Floor
	Ceramic Tile Wains
	Ceramic Tub Alcove
	Vent Fan

(14) Water/Sewer

	Public Water
	Public Sewer
2	Water Well
1	1000 Gal Septic
	2000 Gal Septic

Lump Sum Items:
1,112

(15) Built-ins

	Appliance Allow.
	Cook Top
	Dishwasher
	Garbage Disposal
	Bath Heater
	Vent Fan
	Hot Tub
	Unvented Hood
	Vented Hood
	Intercom
	Jacuzzi Tub
	Jacuzzi repl.Tub
	Oven
	Microwave
	Standard Range
	Self Clean Range
	Sauna
	Trash Compactor
	Central Vacuum
	Security System

(15) Fireplaces

	Interior 1 Story
	Interior 2 Story
	2nd/Same Stack
	Two Sided
	Exterior 1 Story
	Exterior 2 Story
	Prefab 1 Story
	Prefab 2 Story
	Heat Circulator
	Raised Hearth
	Wood Stove
	Direct-Vented Gas

Class: CD
Effec. Age: 21
Floor Area: 1,632
Total Base New : 402,996 E.C.F.
Total Depr Cost: 318,367 X 1.297
Estimated T.C.V: 412,922

(16) Porches/Decks

Area	Type
600	WCP (1 Story)
90	WPP
144	WCP (1 Story)
216	Treated Wood
240	Brzwy, FW

(17) Garage

Year Built:
Car Capacity:
Class: CD
Exterior: Siding
Brick Ven.: 0
Stone Ven.: 0
Common Wall: 1.5 Wal
Foundation: 42 Inch
Finished ?:
Auto. Doors: 0
Mech. Doors: 0
Area: 672
% Good: 0
Storage Area: 0
No Conc. Floor: 0

Bsmnt Garage:

Carport Area:
Roof:

Cost Est. for Res. Bldg: 1 Single Family PLAIN Cls CD Blt 2003
(11) Heating System: Forced Air w/ Ducts
Ground Area = 1632 SF Floor Area = 1632 SF.
Phy/Ab.Phy/Func/Econ/Comb. % Good=79/100/100/100/79
Building Areas

Stories	Exterior	Foundation	Size	Cost New	Depr. Cost
1 Story	Siding	Basement	1,632		
			Total:	204,930	161,894
Other Additions/Adjustments					
Basement Living Area			1388	46,734	36,920
Basement, Outside Entrance, Below Grade			3	6,527	5,156
Plumbing					
3 Fixture Bath			1	3,887	3,071
Water/Sewer					
1000 Gal Septic			1	4,582	3,620
Water Well, 100 Feet			2	11,360	8,974
Porches					
WCP (1 Story)			600	17,544	13,860
WPP			90	2,528	1,997
WCP (1 Story)			144	5,777	4,564
Deck					
Treated Wood			216	4,288	3,388
Garages					
Class: CD Exterior: Siding Foundation: 42 Inch (Unfinished)					
Base Cost			672	24,985	19,738
Common Wall: 1.5 Wall			1	-3,791	-2,995
Class: CD Exterior: Pole (Unfinished)					
Base Cost			1200	26,100	20,619
Class: CD Exterior: Pole (Unfinished)					
Base Cost			1176	25,578	20,207

<<<<< Calculations too long. See Valuation printout for complete pricing. >>>>>

*** Information herein deemed reliable but not guaranteed***

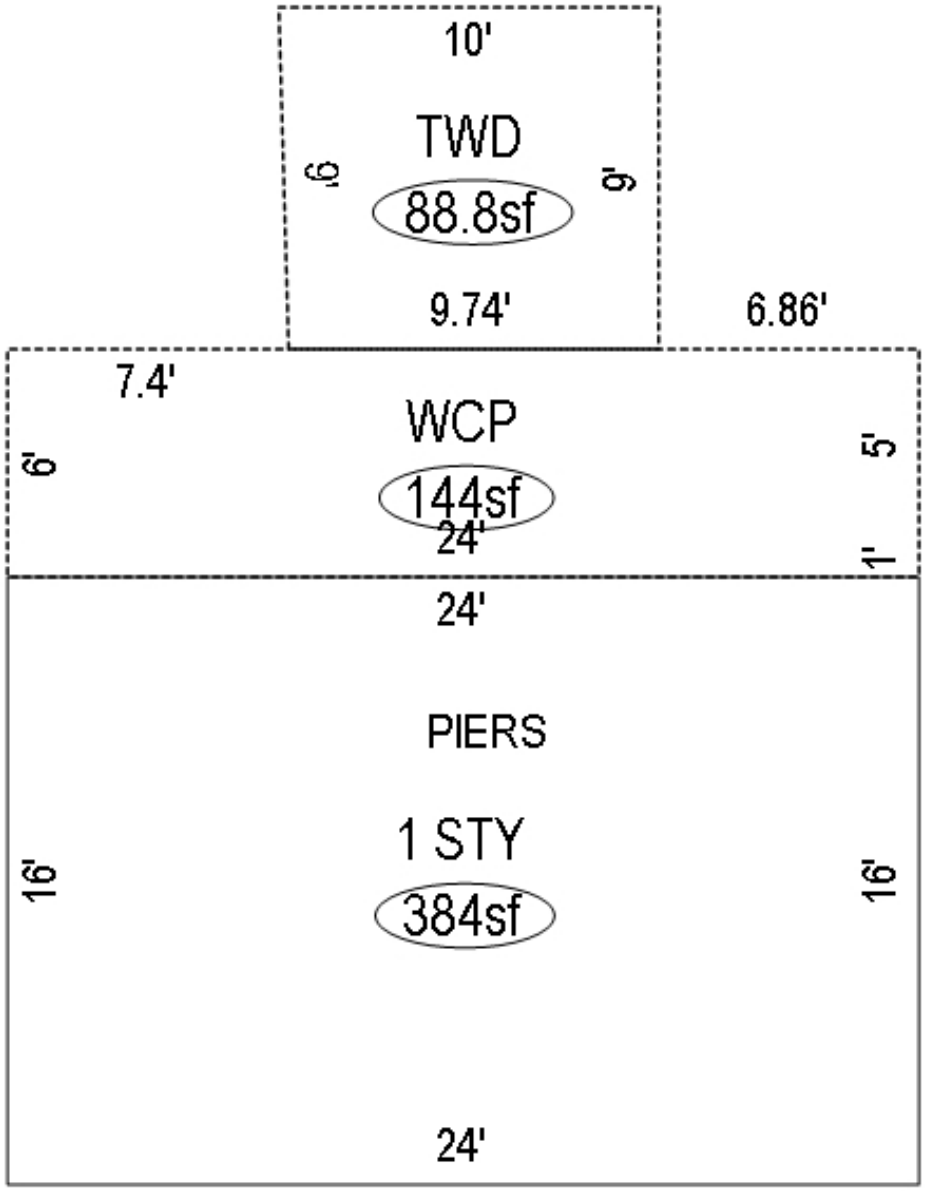

*** Information herein deemed reliable but not guaranteed***

Building Type

	Single Family
	Mobile Home
	Town Home
	Duplex
	A-Frame
X	Wood Frame

Building Style: PLAIN

Yr Built	Remodeled
0	0

Condition: Fair

Room List

	Basement
	1st Floor
	2nd Floor
	Bedrooms

(1) Exterior

	Wood/Shingle
X	Aluminum/Vinyl
	Brick
X	Insulation

(2) Windows

X	Many		Large
	Avg.	X	Avg.
	Few		Small

	Wood Sash
	Metal Sash
X	Vinyl Sash
	Double Hung
	Horiz. Slide
	Casement
	Double Glass
	Patio Doors
X	Storms & Screens

(3) Roof

X	Gable		Gambrel
	Hip		Mansard
	Flat		Shed

X	Asphalt Shingle

Chimney:

(3) Roof (cont.)

	Eavestrough
X	Insulation
0	Front Overhang
0	Other Overhang

(4) Interior

X	Drywall		Plaster
	Paneled		Wood T&G

Trim & Decoration

	Ex	X	Ord		Min

Size of Closets

	Lg	X	Ord		Small

Doors:		Solid	X	H.C.	

(5) Floors

Kitchen:
Other: Linoleum
Other: Carpeted

(6) Ceilings

X	Drywall		

(7) Excavation

Basement: 0 S.F.
Crawl: 0 S.F.
Slab: 0 S.F.
Height to Joists: 0.0

(8) Basement

	Conc. Block
	Poured Conc.
	Stone
	Treated Wood
	Concrete Floor

(9) Basement Finish

	Recreation SF
	Living SF
	Walkout Doors (B)
	No Floor SF
	Walkout Doors (A)

(10) Floor Support

Joists:
Unsupported Len:
Cntr.Sup:

(11) Heating/Cooling

X	Gas		Oil		Elec.
	Wood		Coal		Steam

	Forced Air w/o Ducts
X	Forced Air w/ Ducts
	Forced Hot Water
	Electric Baseboard
	Elec. Ceil. Radiant
	Radiant (in-floor)
	Electric Wall Heat
	Space Heater
	Wall/Floor Furnace
	Forced Heat & Cool
	Heat Pump
	No Heating/Cooling

	Central Air
	Wood Furnace

(12) Electric

150	Amps Service

No./Qual. of Fixtures

	Ex.	X	Ord.		Min

No. of Elec. Outlets

	Many	X	Ave.		Few

(13) Plumbing

	Average Fixture(s)
	3 Fixture Bath
	2 Fixture Bath
	Softener, Auto
	Softener, Manual
	Solar Water Heat
	No Plumbing
	Extra Toilet
	Extra Sink
	Separate Shower
	Ceramic Tile Floor
	Ceramic Tile Wains
	Ceramic Tub Alcove
	Vent Fan

(14) Water/Sewer

	Public Water
	Public Sewer
	Water Well
	1000 Gal Septic
	2000 Gal Septic

Lump Sum Items:

(15) Built-ins

	Appliance Allow.
	Cook Top
	Dishwasher
	Garbage Disposal
	Bath Heater
	Vent Fan
	Hot Tub
	Unvented Hood
	Vented Hood
	Intercom
	Jacuzzi Tub
	Jacuzzi repl.Tub
	Oven
	Microwave
	Standard Range
	Self Clean Range
	Sauna
	Trash Compactor
	Central Vacuum
	Security System

(15) Fireplaces

	Interior 1 Story
	Interior 2 Story
	2nd/Same Stack
	Two Sided
	Exterior 1 Story
	Exterior 2 Story
	Prefab 1 Story
	Prefab 2 Story
	Heat Circulator
	Raised Hearth
	Wood Stove
	Direct-Vented Gas

Class: D -10
Effec. Age: 20
Floor Area: 384
Total Base New : 45,543 E.C.F.
Total Depr Cost: 32,669 X 1.297
Estimated T.C.V: 42,372

(16) Porches/Decks

Area	Type
144	WCP (1 Story)
90	Treated Wood

(17) Garage

Year Built: 2022
Car Capacity:
Class: D
Exterior: Pole
Brick Ven.: 0
Stone Ven.: 0
Common Wall: Detache
Foundation: 18 Inch
Finished ?:
Auto. Doors: 0
Mech. Doors: 0
Area: 1200
% Good: 0
Storage Area: 0
No Conc. Floor: 1200

Bsmnt Garage:

Carport Area:
Roof:

Cost Est. for Res. Bldg: 2 Recreation Cabin PLAIN Cls D-10 Blt 0
(11) Heating System: Forced Air w/ Ducts
Ground Area = 384 SF Floor Area = 384 SF.
Phy/Ab.Phy/Func/Econ/Comb. % Good=80/100/100/100/80
Building Areas

Description	Size	Cost New	Depr. Cost	
Other Additions/Adjustments				
Plumbing				
3 Fixture Bath	1	-3,268	-2,614	
Porches				
WCP (1 Story)	144	5,203	1,561	*3
Deck				
Treated Wood	90	2,327	698	*3
Garages				
Class: D Exterior: Pole (Unfinished)				
Base Cost	1200	23,076	18,461	
No Concrete Floor	1200	-6,732	-5,386	
	Totals:	45,543	32,669	

Notes:
ECF (RESIDENTIAL) 1.297 => TCV: 42,372

*** Information herein deemed reliable but not guaranteed***

Parcel Number: 2410-32-3302 Jurisdiction: GREENWOOD TWP County: WEXFORD Printed on 02/15/2024

Grantor	Grantee	Sale Price	Sale Date	Inst. Type	Terms of Sale	Liber & Page	Verified By	Prcnt. Trans.

Property Address	Class: RESIDENTIAL-IMPROV	Zoning:	Building Permit(s)	Date	Number	Status
1147 E 14 RD	School: MESICK CONSOLIDATED SCH DIST		RESIDENTIAL - REMODEL	03/08/2000	PB9514	
	P.R.E. 0%					
Owner's Name/Address	:					
MACDONALD, C. ROSS & MARGARET A TRUST 29740 TROPEA WARREN MI 48092	2024 Est TCV 331,550 TCV/TFA: 328.92					

X Improved | Vacant

Tax Description

S 1/2 OF SW 1/4 OF SW 1/4 20 A. GW. SEC. 32 T24N R10W -MESICK-

Comments/Influences

The Equalizer. Copyright (c) 1999 - 2009. Licensed To: Township of Greenwood, County of Wexford, Michigan

	Public Improvements
	Dirt Road
X	Gravel Road
	Paved Road
	Storm Sewer
	Sidewalk
	Water
	Sewer
X	Electric
	Gas
	Curb
	Street Lights
	Standard Utilities
	Underground Utils.

	Topography of Site
	Level
X	Rolling
X	Low
X	High
	Landscaped
X	Swamp
X	Wooded
	Pond
	Waterfront
	Ravine
	Wetland
	Flood Plain
X	PINES/OPEN

Who	When	What
GLA	05/11/2020	INSPECTION
GLA	07/10/2019	INSPECTION
GLA	07/10/2019	INSPECTION

Land Value Estimates for Land Table 4010.LAND VALUES

Description	Frontage	Depth	* Factors * Front	Depth	Rate	%Adj.	Reason	Value
	400.00	0.00	1.0000	1.0000	0	100		0
ACREAGE			18.510 Acres		3,200	100		59,232
ROW			1.490 Acres		0	100		0
Flat Value: POND								2,000
400 Actual Front Feet, 20.00 Total Acres							Total Est. Land Value =	61,232

Land Improvement Cost Estimates

Description	Rate	Size	% Good	Cash Value
D/W/P: 4in Concrete	7.01	335	59	1,385
Total Estimated Land Improvements True Cash Value =				1,385

Year	Land Value	Building Value	Assessed Value	Board of Review	Tribunal/ Other	Taxable Value
2024	30,600	135,200	165,800			72,126C
2023	25,100	110,300	135,400			68,692C
2022	23,200	93,000	116,200			65,421C
2021	22,000	94,000	116,000			63,332C

*** Information herein deemed reliable but not guaranteed***

Building Type

X	Single Family
	Mobile Home
	Town Home
	Duplex
	A-Frame
X	Wood Frame

Building Style: PLAIN

Yr Built	Remodeled
2001	0

Condition: Good

Room List

	Basement
	1st Floor
	2nd Floor
	Bedrooms

(1) Exterior

X	Wood/Shingle
	Aluminum/Vinyl
	Brick
X	Insulation

(2) Windows

X	Many Avg. Few	X	Large Avg. Small

	Wood Sash
	Metal Sash
X	Vinyl Sash
	Double Hung
	Horiz. Slide
	Casement
	Double Glass
	Patio Doors
X	Storms & Screens

(3) Roof

X	Gable		Gambrel
	Hip		Mansard
	Flat		Shed

X	Asphalt Shingle

Chimney:

(3) Roof (cont.)

	Eavestrough
X	Insulation
0	Front Overhang
0	Other Overhang

(4) Interior

X	Drywall Paneled		Plaster Wood T&G

Trim & Decoration

	Ex	X	Ord		Min

Size of Closets

	Lg	X	Ord		Small

Doors: | | Solid | X | H.C.

(5) Floors

Kitchen:
Other: Linoleum
Other: Carpeted

(6) Ceilings

X	Drywall

(7) Excavation

Basement: 1008 S.F.
Crawl: 0 S.F.
Slab: 0 S.F.
Height to Joists: 0.0

(8) Basement

	Conc. Block
	Poured Conc.
	Stone
	Treated Wood
	Concrete Floor

(9) Basement Finish

	Recreation	SF
908	Living	SF
1	Walkout Doors (B)	
	No Floor	SF
	Walkout Doors (A)	

(10) Floor Support

Joists:
Unsupported Len:
Cntr.Sup:

(11) Heating/Cooling

X	Gas		Oil		Elec.
	Wood		Coal		Steam

	Forced Air w/o Ducts
X	Forced Air w/ Ducts
	Forced Hot Water
	Electric Baseboard
	Elec. Ceil. Radiant
	Radiant (in-floor)
	Electric Wall Heat
	Space Heater
	Wall/Floor Furnace
	Forced Heat & Cool
	Heat Pump
	No Heating/Cooling

	Central Air
	Wood Furnace

(12) Electric

150	Amps Service

No./Qual. of Fixtures

	Ex.	X	Ord.		Min

No. of Elec. Outlets

	Many	X	Ave.		Few

(13) Plumbing

2	Average Fixture(s)
	3 Fixture Bath
	2 Fixture Bath
	Softener, Auto
	Softener, Manual
	Solar Water Heat
	No Plumbing
	Extra Toilet
	Extra Sink
	Separate Shower
	Ceramic Tile Floor
	Ceramic Tile Wains
	Ceramic Tub Alcove
	Vent Fan

(14) Water/Sewer

	Public Water
	Public Sewer
1	Water Well
1	1000 Gal Septic
	2000 Gal Septic

Lump Sum Items:

(15) Built-ins

	Appliance Allow.
	Cook Top
	Dishwasher
	Garbage Disposal
	Bath Heater
	Vent Fan
	Hot Tub
	Unvented Hood
	Vented Hood
	Intercom
	Jacuzzi Tub
	Jacuzzi repl.Tub
	Oven
	Microwave
	Standard Range
	Self Clean Range
	Sauna
	Trash Compactor
	Central Vacuum
	Security System

(15) Fireplaces

	Interior 1 Story
	Interior 2 Story
	2nd/Same Stack
	Two Sided
	Exterior 1 Story
	Exterior 2 Story
	Prefab 1 Story
	Prefab 2 Story
	Heat Circulator
	Raised Hearth
	Wood Stove
	Direct-Vented Gas

Class: C
Effec. Age: 23
Floor Area: 1,008
Total Base New : 269,283 E.C.F.
Total Depr Cost: 207,350 X 1.297
Estimated T.C.V: 268,933

(16) Porches/Decks

Area	Type
24	WPP
128	WPP
300	CCP (1 Story)
288	WCP (1 Story)
381	4in Concrete

(17) Garage

Year Built: 2001
Car Capacity:
Class: C
Exterior: Pole
Brick Ven.: 0
Stone Ven.: 0
Common Wall: Detache
Foundation: 18 Inch
Finished ?:
Auto. Doors: 0
Mech. Doors: 0
Area: 1200
% Good: 0
Storage Area: 0
No Conc. Floor: 0

Bsmnt Garage:

Carport Area:
Roof:

Cost Est. for Res. Bldg: 1 Single Family PLAIN Cls C Blt 2001
(11) Heating System: Forced Air w/ Ducts
Ground Area = 1008 SF Floor Area = 1008 SF.
Phy/Ab.Phy/Func/Econ/Comb. % Good=77/100/100/100/77

Building Areas

Stories	Exterior	Foundation	Size	Cost New	Depr. Cost
1 Story	Siding	Basement	1,008		
			Total:	154,412	118,898
Other Additions/Adjustments					
Basement Living Area			908	32,788	25,247
Basement, Outside Entrance, Below Grade			1	2,578	1,985
Plumbing					
3 Fixture Bath			1	4,678	3,602
Water/Sewer					
1000 Gal Septic			1	4,899	3,772
Water Well, 100 Feet			1	5,849	4,504
Porches					
WPP			128	3,479	2,679
CCP (1 Story)			300	7,413	5,708
WCP (1 Story)			288	9,763	7,518
WPP			24	1,280	986
4in Concrete			381	3,139	2,417
Garages					
Class: C Exterior: Pole (Unfinished)					
Base Cost			1200	29,160	22,453
Class: D Exterior: Siding Foundation: 42 Inch (Unfinished)					
Base Cost			216	9,845	7,581
			Totals:	269,283	207,350

Notes:
ECF (RESIDENTIAL) 1.297 => TCV: 268,933

*** Information herein deemed reliable but not guaranteed***

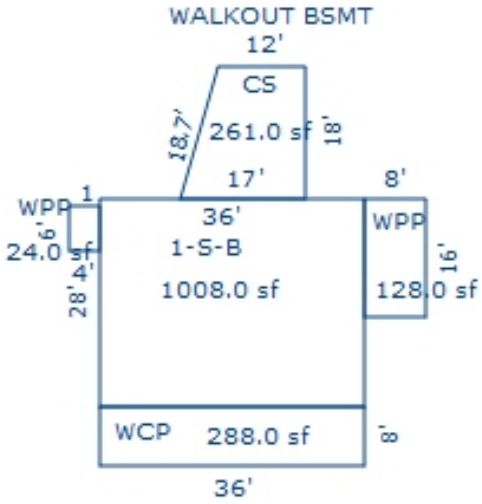

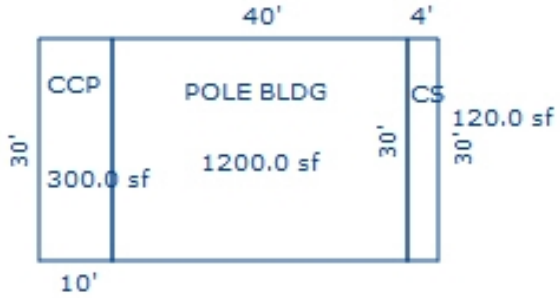

Sketch by Apex Sketch

*** Information herein deemed reliable but not guaranteed***

Parcel Number: 2410-32-4101-01 Jurisdiction: GREENWOOD TWP County: WEXFORD Printed on 02/15/2024

Grantor	Grantee	Sale Price	Sale Date	Inst. Type	Terms of Sale	Liber & Page	Verified By	Prcnt. Trans.
FISHER, ROBERT & KATHALYN	FISHER, ROBERT & KATHALYN	0	10/13/2021	QC	18-LIFE ESTATE	691/1005	DEED	0.0
FREEMAN, KENNETH L & JILL	FISHER, ROBERT & KATHALYN	275,000	06/25/2014	WD	03-ARM'S LENGTH	669/89	DEED	100.0
GLAUCH, HAROLD L TRUST	FREEMAN, KENNETH L & JILL	280,000	06/25/2013	WD	03-ARM'S LENGTH	658/1456	DEED	100.0

Property Address

6122 N 27 RD

Owner's Name/Address

FISHER, ROBERT & KATHALYN LE
2065 DALESFORD
TROY MI 48098

Tax Description

PAR C; BEG AT S 1/4 COR OF SEC; W 662.52 FT; N 806.17 FT; W 643.33 FT; N 506.07 FT; E 1311.21 FT; E 1305.9 FT; S 1314.48 FT; W 1306.14 FT TO POB. -66.9 A. M/L GW. SEC. 32 T24N R10W -MESICK- SPLIT ON 12/05/2008 FROM 2410-32-4101;

Comments/Influences

SPLIT/COMB. ON 12/05/2008 COMPLETED 3/06/2009 DEB OWNER REQUEST ;
PARENT PARCEL(S): 2410-32-4101;
CHILD PARCEL(S): 2410-32-4101-01, 2410-32-4101-02;

The Equalizer. Copyright (c) 1999 - 2009.
Licensed To: Township of Greenwood, County of Wexford, Michigan

Class: RESIDENTIAL-IMPROV Zoning:
School: MESICK CONSOLIDATED SCH DIST
P.R.E. 0%
:
2024 Est TCV 451,864 TCV/TFA: 301.24

Building Permit(s)	Date	Number	Status
RESIDENTIAL - NEW	10/16/2001	PE14062	

X Improved | Vacant

	Public Improvements
	Dirt Road
X	Gravel Road
X	Paved Road
	Storm Sewer
	Sidewalk
	Water
	Sewer
X	Electric
	Gas
	Curb
	Street Lights
	Standard Utilities
	Underground Utils.

	Topography of Site
X	Level
X	Rolling
X	Low
X	High
	Landscaped
X	Swamp
X	Wooded
	Pond
	Waterfront
	Ravine
	Wetland
	Flood Plain
X	PINES/OPEN

Who	When	What
GLA	05/11/2020	INSPECTION
GLA	07/10/2019	INSPECTION
GLA	07/10/2019	INSPECTION

Land Value Estimates for Land Table 4010.LAND VALUES

Description	Frontage	Depth	* Factors * Front	Depth	Rate	%Adj.	Reason	Value
ACREAGE			65.025 Acres		2,610	100		169,726
ROW			1.875 Acres		0	100		0
			66.90 Total Acres				Total Est. Land Value =	169,726

Land Improvement Cost Estimates

Description	Rate	Size	% Good	Cash Value
Fencing: Wd, Split, 2 Rail	14.72	20	37	109
D/W/P: 4in Concrete	6.11	568	37	1,284
D/W/P: Asphalt Paving	2.71	4744	37	4,757
D/W/P: Patio Blocks	13.19	180	0	0
Wood Frame	28.00	64	37	663
Wood Frame	31.33	40	37	464
Total Estimated Land Improvements True Cash Value =				7,277

Year	Land Value	Building Value	Assessed Value	Board of Review	Tribunal/ Other	Taxable Value
2024	84,900	141,000	225,900			161,860C
2023	78,600	116,100	194,700			154,153C
2022	55,300	98,200	153,500			146,813C
2021	52,300	99,900	152,200			142,123C

*** Information herein deemed reliable but not guaranteed***

Building Type

X	Single Family
	Mobile Home
	Town Home
	Duplex
	A-Frame
X	Wood Frame

Building Style: LOG

Yr Built	Remodeled
1994	0

Condition: Good

Room List

	Basement
	1st Floor
	2nd Floor
3	Bedrooms

(1) Exterior

	Wood/Shingle
	Aluminum/Vinyl
	Brick
X	Log
	Insulation

(2) Windows

X	Many		Large
	Avg.	X	Avg.
	Few		Small

X	Wood Sash
	Metal Sash
	Vinyl Sash
X	Double Hung
	Horiz. Slide
	Casement
	Double Glass
	Patio Doors
X	Storms & Screens

(3) Roof

X	Gable		Gambrel
	Hip		Mansard
	Flat		Shed

X	Asphalt Shingle

Chimney: Stone

(3) Roof (cont.)

	Eavestrough
	Insulation
0	Front Overhang
0	Other Overhang

(4) Interior

X	Drywall		Plaster
X	Paneled	X	Wood T&G

Trim & Decoration

	Ex	X	Ord		Min

Size of Closets

	Lg	X	Ord		Small

Doors:		Solid	X	H.C.	

(5) Floors

Kitchen: Laminate
Other: Carpeted
Other:

(6) Ceilings

X	Drywall
X	Wood

(7) Excavation

Basement: 1000 S.F.
Crawl: 0 S.F.
Slab: 0 S.F.
Height to Joists: 0.0

(8) Basement

	Conc. Block
	Poured Conc.
	Stone
	Treated Wood
	Concrete Floor

(9) Basement Finish

	Recreation	SF
550	Living	SF
	Walkout Doors (B)	
	No Floor	SF
	Walkout Doors (A)	

(10) Floor Support

Joists:
Unsupported Len:
Cntr.Sup:

(11) Heating/Cooling

X	Gas		Oil		Elec.
	Wood		Coal		Steam

	Forced Air w/o Ducts
X	Forced Air w/ Ducts
	Forced Hot Water
	Electric Baseboard
	Elec. Ceil. Radiant
	Radiant (in-floor)
	Electric Wall Heat
	Space Heater
	Wall/Floor Furnace
	Forced Heat & Cool
	Heat Pump
	No Heating/Cooling
	Central Air
	Wood Furnace

(12) Electric

0	Amps Service

No./Qual. of Fixtures

	Ex.	X	Ord.		Min

No. of Elec. Outlets

	Many	X	Ave.		Few

(13) Plumbing

	Average Fixture(s)
2	3 Fixture Bath
1	2 Fixture Bath
	Softener, Auto
	Softener, Manual
	Solar Water Heat
	No Plumbing
	Extra Toilet
	Extra Sink
	Separate Shower
	Ceramic Tile Floor
	Ceramic Tile Wains
	Ceramic Tub Alcove
	Vent Fan

(14) Water/Sewer

	Public Water
	Public Sewer
1	Water Well
1	1000 Gal Septic
	2000 Gal Septic

Lump Sum Items:

(15) Built-ins

	Appliance Allow.
	Cook Top
	Dishwasher
	Garbage Disposal
	Bath Heater
	Vent Fan
	Hot Tub
	Unvented Hood
	Vented Hood
	Intercom
	Jacuzzi Tub
	Jacuzzi repl.Tub
	Oven
	Microwave
	Standard Range
	Self Clean Range
	Sauna
	Trash Compactor
	Central Vacuum
	Security System

(15) Fireplaces

	Interior 1 Story
	Interior 2 Story
	2nd/Same Stack
	Two Sided
1	Exterior 1 Story
	Exterior 2 Story
	Prefab 1 Story
	Prefab 2 Story
	Heat Circulator
	Raised Hearth
	Wood Stove
	Direct-Vented Gas

Class: C
Effec. Age: 29
Floor Area: 1,500
Total Base New : 287,093 E.C.F.
Total Depr Cost: 203,833 X 1.297
Estimated T.C.V: 264,372

(16) Porches/Decks

Area	Type
64	WGEP (1 Story)
168	WCP (1 Story)
480	WCP (1 Story)
456	Pine

(17) Garage

Year Built:
Car Capacity:
Class: C
Exterior: Siding
Brick Ven.: 0
Stone Ven.: 0
Common Wall: Detache
Foundation: 18 Inch
Finished ?:
Auto. Doors: 0
Mech. Doors: 0
Area: 672
% Good: 0
Storage Area: 0
No Conc. Floor: 0

Bsmnt Garage:

Carport Area:
Roof:

Cost Est. for Res. Bldg: 1 Single Family LOG Cls C Blt 1994
(11) Heating System: Forced Air w/ Ducts
Ground Area = 1000 SF Floor Area = 1500 SF.
Phy/Ab.Phy/Func/Econ/Comb. % Good=71/100/100/100/71
Building Areas

Stories	Exterior	Foundation	Size	Cost New	Depr. Cost
1.5 Story	Pine Logs	Basement	1,000		
			Total:	194,254	137,920
Other Additions/Adjustments					
Basement Living Area			550	19,861	14,101
Plumbing					
3 Fixture Bath			1	4,678	3,321
2 Fixture Bath			1	3,130	2,222
Water/Sewer					
1000 Gal Septic			1	4,899	3,478
Water Well, 100 Feet			1	5,849	4,153
Porches					
WGEP (1 Story)			64	7,220	5,126
WCP (1 Story)			168	7,189	5,104
WCP (1 Story)			480	15,778	11,202
Deck					
Pine			456	5,709	4,053
Garages					
Class: C Exterior: Siding Foundation: 18 Inch (Unfinished)					
Base Cost			672	25,079	17,806
Class: D Exterior: Siding Foundation: 18 Inch (Unfinished)					
No Concrete Floor			1960	-13,112	-9,310
Fireplaces					
Exterior 1 Story			1	6,559	4,657
			Totals:	287,093	203,833

<<<<< Calculations too long. See Valuation printout for complete pricing. >>>>>

*** Information herein deemed reliable but not guaranteed***

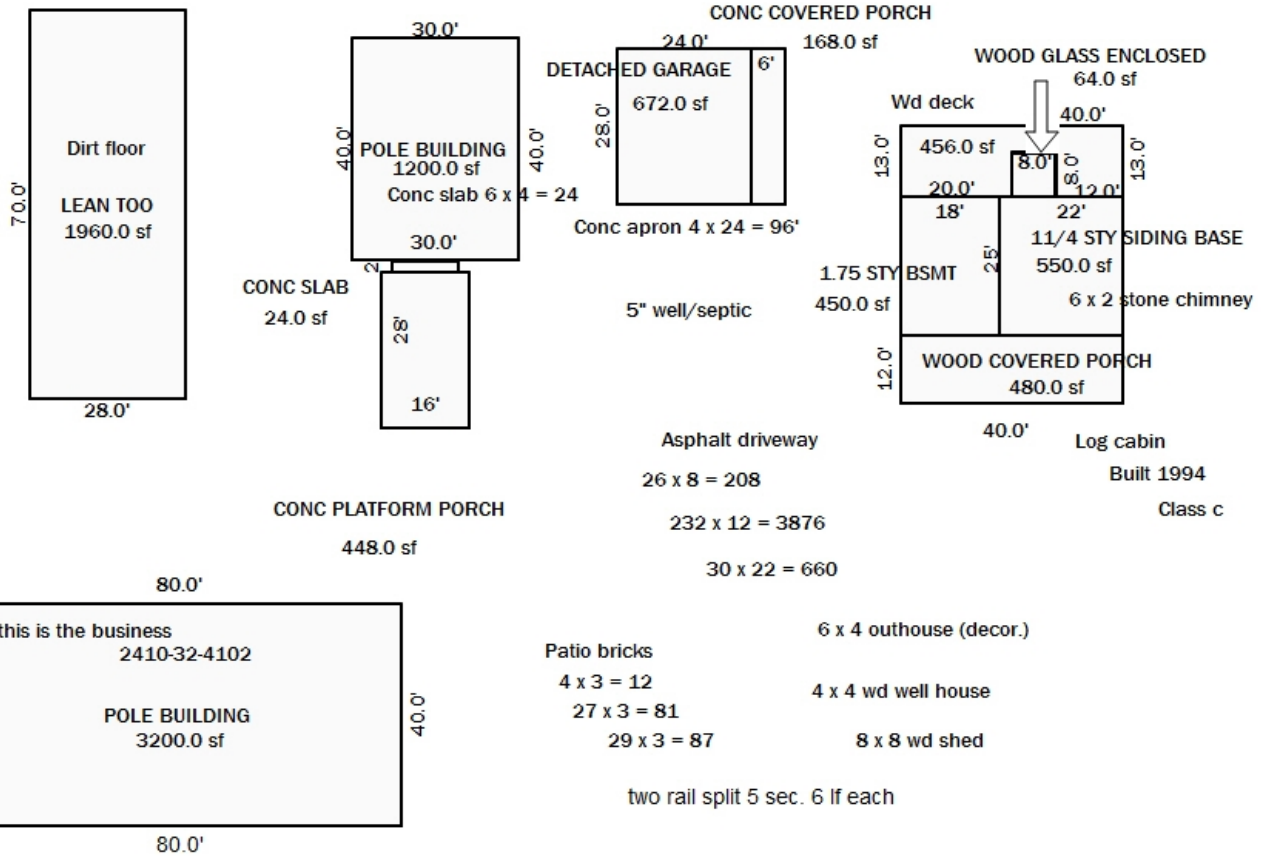

Sketch by Apex Sketch

*** Information herein deemed reliable but not guaranteed***

Building Type	Farm Implement/Equipment	Farm Implement/Equipment			
Year Built					
Class/Construction	D,Pole	D,Pole			
Quality/Exterior	Low Cost	Average			
# of Walls, Perimeter	Lean-To, 126	4 Wall, 140			
Height	8	10			
Heating System	No Heating/Cooling	No Heating/Cooling			
Length/Width/Area	70 x 28 = 1960	40 x 30 = 1200			
Cost New	$ 7,703	$ 13,620			
Phy./Func./Econ. %Good	52/100/100 52.0	52/100/100 52.0			
Depreciated Cost	$ 4,006	$ 7,082			
+ Unit-In-Place Items	$ 0	$ 0			
Description, Size X Rate X %Good = Cost Itemized -> Unit-In-Place -> Items ->					
E.C.F.	X 0.946	X 0.946			
% Good	52	52			
Est. True Cash Value	$ 3,789	$ 6,700			
Comments:					
Total Estimated True Cash Value of Agricultural Improvements / This Card: 10489 / All Cards: 10489					

*** Information herein deemed reliable but not guaranteed***

Parcel Number: 2410-32-4101-02 Jurisdiction: GREENWOOD TWP County: WEXFORD Printed on 02/15/2024

Grantor	Grantee	Sale Price	Sale Date	Inst. Type	Terms of Sale	Liber & Page	Verified By	Prcnt. Trans.

Property Address	Class: RESIDENTIAL-IMPROV	Zoning:	Building Permit(s)	Date	Number	Status
6020 N 27 RD	School: MESICK CONSOLIDATED SCH DIST					
	P.R.E. 0% Qual. Ag.					
Owner's Name/Address	:					
GLAUCH, HAROLD L TRUST 2150 RIVER HIGHLAND LN TRAVERSE CITY MI 49696	2024 Est TCV 137,211 TCV/TFA: 0.00					

Tax Description

PAR A; COM AT S 1/4 COR OF SEC; W 662.52 FT TO POB: W 643.32 FT; N 805.83 FT; E 643.33 FT; S 806.17 FT TO POB. 11.9 A M/L- GW. SEC. 32 T24N R10W -MESICK- SPLIT ON 12/05/2008 FROM 2410-32-4101;

Comments/Influences

SPLIT/COMB. ON 12/05/2008 COMPLETED 3/06/2009 DEB OWNER REQUEST ;
PARENT PARCEL(S): 2410-32-4101;
CHILD PARCEL(S): 2410-32-4101-01, 2410-32-4101-02;

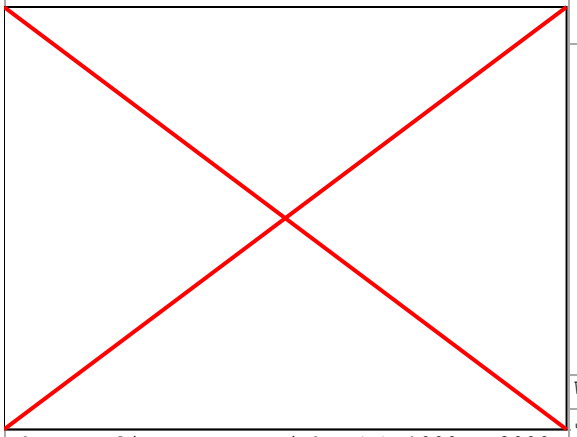

The Equalizer. Copyright (c) 1999 - 2009. Licensed To: Township of Greenwood, County of Wexford, Michigan

X	Improved
	Vacant

	Public Improvements
	Dirt Road
X	Gravel Road
	Paved Road
	Storm Sewer
	Sidewalk
	Water
	Sewer
X	Electric
	Gas
	Curb
	Street Lights
	Standard Utilities
	Underground Utils.

	Topography of Site
X	Level
X	Rolling
	Low
X	High
	Landscaped
	Swamp
	Wooded
	Pond
	Waterfront
	Ravine
	Wetland
	Flood Plain
X	PINES/OPEN

Who	When	What
JB	10/23/2023	INSPECTION
GLA	05/11/2020	INSPECTION
GLA	07/10/2019	INSPECTION

Land Value Estimates for Land Table 4010.LAND VALUES

Description	Frontage	Depth	* Factors * Front	Depth	Rate	%Adj.	Reason	Value
ACREAGE			10.800 Acres		4,316	100		46,614
ROW			1.100 Acres		0	100		0
			11.90 Total Acres		Total Est. Land Value =			46,614

Year	Land Value	Building Value	Assessed Value	Board of Review	Tribunal/ Other	Taxable Value
2024	23,300	45,300	68,600			25,676C
2023	14,000	37,000	51,000			24,454C
2022	12,800	31,200	44,000			23,290C
2021	13,000	31,500	44,500			22,546C

*** Information herein deemed reliable but not guaranteed***

Building Type

X	Single Family
	Mobile Home
	Town Home
	Duplex
	A-Frame
X	Wood Frame

Building Style: PLAIN

Yr Built	Remodeled
1999	0

Condition: Good

Room List

	Basement
	1st Floor
	2nd Floor
	Bedrooms

(1) Exterior

X	Wood/Shingle
	Aluminum/Vinyl
	Brick
X	Insulation

(2) Windows

X	Many Avg. Few	X	Large Avg. Small

	Wood Sash
	Metal Sash
X	Vinyl Sash
	Double Hung
	Horiz. Slide
	Casement
	Double Glass
	Patio Doors
X	Storms & Screens

(3) Roof

X	Gable		Gambrel
	Hip		Mansard
	Flat		Shed

X	Asphalt Shingle

Chimney:

(3) Roof (cont.)

	Eavestrough
X	Insulation
0	Front Overhang
0	Other Overhang

(4) Interior

X	Drywall Paneled		Plaster Wood T&G

Trim & Decoration

	Ex	X	Ord		Min

Size of Closets

	Lg	X	Ord		Small

Doors: | | Solid | X | H.C.

(5) Floors

Kitchen:
Other: Linoleum
Other: Carpeted

(6) Ceilings

X	Drywall		

(7) Excavation

Basement: 0 S.F.
Crawl: 0 S.F.
Slab: 0 S.F.
Height to Joists: 0.0

(8) Basement

	Conc. Block
	Poured Conc.
	Stone
	Treated Wood
	Concrete Floor

(9) Basement Finish

	Recreation SF
	Living SF
	Walkout Doors (B)
	No Floor SF
	Walkout Doors (A)

(10) Floor Support

Joists:
Unsupported Len:
Cntr.Sup:

(11) Heating/Cooling

X	Gas Wood		Oil Coal		Elec. Steam

	Forced Air w/o Ducts
X	Forced Air w/ Ducts
	Forced Hot Water
	Electric Baseboard
	Elec. Ceil. Radiant
	Radiant (in-floor)
	Electric Wall Heat
	Space Heater
	Wall/Floor Furnace
	Forced Heat & Cool
	Heat Pump
	No Heating/Cooling

	Central Air
	Wood Furnace

(12) Electric

150	Amps Service

No./Qual. of Fixtures

	Ex.	X	Ord.		Min

No. of Elec. Outlets

	Many	X	Ave.		Few

(13) Plumbing

	Average Fixture(s)
2	3 Fixture Bath
	2 Fixture Bath
	Softener, Auto
	Softener, Manual
	Solar Water Heat
	No Plumbing
	Extra Toilet
	Extra Sink
	Separate Shower
	Ceramic Tile Floor
	Ceramic Tile Wains
	Ceramic Tub Alcove
	Vent Fan

(14) Water/Sewer

	Public Water
	Public Sewer
1	Water Well
1	1000 Gal Septic
	2000 Gal Septic

Lump Sum Items:

(15) Built-ins

	Appliance Allow.
	Cook Top
	Dishwasher
	Garbage Disposal
	Bath Heater
	Vent Fan
	Hot Tub
	Unvented Hood
	Vented Hood
	Intercom
	Jacuzzi Tub
	Jacuzzi repl.Tub
	Oven
	Microwave
	Standard Range
	Self Clean Range
	Sauna
	Trash Compactor
	Central Vacuum
	Security System

(15) Fireplaces

	Interior 1 Story
	Interior 2 Story
	2nd/Same Stack
	Two Sided
	Exterior 1 Story
	Exterior 2 Story
	Prefab 1 Story
	Prefab 2 Story
	Heat Circulator
	Raised Hearth
	Wood Stove
	Direct-Vented Gas

Class: CD
Effec. Age: 24
Floor Area: 0
Total Base New : 91,909 E.C.F.
Total Depr Cost: 69,851 X 1.297
Estimated T.C.V: 90,597

(16) Porches/Decks

Area	Type

(17) Garage

Year Built:
Car Capacity:
Class: C
Exterior: Pole
Brick Ven.: 0
Stone Ven.: 0
Common Wall: Detache
Foundation: 18 Inch
Finished ?:
Auto. Doors: 0
Mech. Doors: 0
Area: 3200
% Good: 0
Storage Area: 0
No Conc. Floor: 0

Bsmnt Garage:

Carport Area:
Roof:

Cost Est. for Res. Bldg: 1 Single Family PLAIN Cls CD Blt 1999
(11) Heating System: Forced Air w/ Ducts
Ground Area = 0 SF Floor Area = 0 SF.
Phy/Ab.Phy/Func/Econ/Comb. % Good=76/100/100/100/76
Building Areas

Stories / Exterior / Foundation	Size	Cost New	Depr. Cost
Other Additions/Adjustments			
Plumbing			
3 Fixture Bath	1	3,887	2,954
Water/Sewer			
1000 Gal Septic	1	4,582	3,482
Water Well, 100 Feet	1	5,680	4,317
Garages			
Class: C Exterior: Pole (Unfinished)			
Base Cost	3200	77,760	59,098
	Totals:	91,909	69,851

Notes:

ECF (RESIDENTIAL) 1.297 => TCV: 90,597

*** Information herein deemed reliable but not guaranteed***

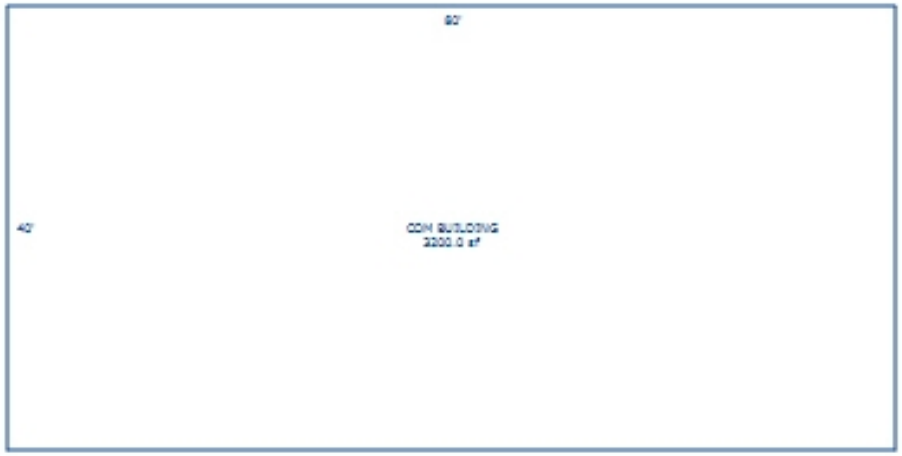

Sketch by Apex Sketch

*** Information herein deemed reliable but not guaranteed***

Parcel Number: 2410-32-4102-01 Jurisdiction: GREENWOOD TWP County: WEXFORD Printed on 02/15/2024

Grantor	Grantee	Sale Price	Sale Date	Inst. Type	Terms of Sale	Liber & Page	Verified By	Prcnt. Trans.
KEN MACK PROPERTIES LLC	SPENCER, LEVI D & MARISSA	380,000	09/12/2022	WD	03-ARM'S LENGTH	693/2662	DEED	100.0
GLAUCH, HAROLD L TRUST	KEN MACK PROPERTIES LLC	132,500	12/03/2008	WD	32-SPLIT VACANT	616/643	DEED	100.0

Property Address

6245 N 29 RD

Owner's Name/Address

SPENCER, LEVI D & MARISSA
6245 N 29 RD
MANTON MI 49663

Tax Description

PAR B; COM AT SE 1/4 COR OF SEC; W 1090.01 FT TO POB: W 216.13 FT; N 1314.48 FT; N 1311.12 FT; E 1305.9 FT; S 2186.01 FT; W 1090.01 FT; S 440 FT TO POB. -67.72 A M/L- TOG W/ & SUB TO EASMT GW. SEC. 32 T24N R10W - MESICK - [[PART ASSESSED UNDER 32-4402 2000 SPLIT ON 12/05/2008 FROM 2410-32-4102; 2410-32-4101

Comments/Influences

SPLIT/COMB. ON 12/05/2008 COMPLETED 3/06/2009 DEB OWNER REQUEST ; PARENT PARCEL(S): 2410-32-4102;

The Equalizer. Copyright (c) 1999 - 2009. Licensed To: Township of Greenwood, County of Wexford, Michigan

Class: AGRICULTURAL-IMPRO Zoning:

School: MESICK CONSOLIDATED SCH DIST

P.R.E. 100% 11/03/2015 Qual. Ag.

:

2024 Est TCV 443,206 TCV/TFA: 197.86

Building Permit(s)	Date	Number	Status
Foundation	11/23/2015	PB15--0256	COMPLETE
Res. Single Family	05/04/2011	PB11-0092	
Res. Single Family	07/15/2009	PP09-4853	
Res. New Construction	06/17/2009	PE09-18509	

X Improved | Vacant

Public Improvements

	Dirt Road
X	Gravel Road
X	Paved Road
	Storm Sewer
	Sidewalk
	Water
	Sewer
X	Electric
	Gas
	Curb
	Street Lights
	Standard Utilities
	Underground Utils.

Topography of Site

X	Level
X	Rolling
X	Low
X	High
	Landscaped
X	Swamp
X	Wooded
	Pond
	Waterfront
	Ravine
	Wetland
	Flood Plain
X	PINES/OPEN

Who	When	What
GLA	05/13/2021	INSPECTION
GLA	07/10/2019	INSPECTION
GLA	07/10/2019	INSPECTION

Land Value Estimates for Land Table 1010.AG

Description	Frontage	Depth	* Factors * Front	Depth	Rate	%Adj.	Reason	Value
AG LAND	60 ACRES		69.06 Acres		2690	100		185,771
AG LAND	ROW		1.34 Acres		0	100		0
			70.40 Total Acres				Total Est. Land Value =	185,771

Land Improvement Cost Estimates

Description	Rate	Size	% Good	Cash Value
D/W/P: 3.5 Concrete	6.21	157	66	643
D/W/P: 3.5 Concrete	6.21	448	66	1,836
D/W/P: 3.5 Concrete	6.21	234	66	959
Total Estimated Land Improvements True Cash Value =				3,438

Year	Land Value	Building Value	Assessed Value	Board of Review	Tribunal/ Other	Taxable Value
2024	92,900	128,700	221,600			195,720C
2023	69,100	117,300	186,400			186,400S
2022	62,200	78,800	141,000			116,573C
2021	58,700	93,700	152,400			112,849C

*** Information herein deemed reliable but not guaranteed***

Building Type

X	Single Family
	Mobile Home
	Town Home
	Duplex
	A-Frame
X	Wood Frame

Building Style: PLAIN

Yr Built	Remodeled
2008	0

Condition: Good

Room List

	Basement
	1st Floor
	2nd Floor
	Bedrooms

(1) Exterior

	Wood/Shingle
X	Aluminum/Vinyl
	Brick
X	Insulation

(2) Windows

X	Many		Large
	Avg.	X	Avg.
	Few		Small

	Wood Sash
	Metal Sash
X	Vinyl Sash
	Double Hung
	Horiz. Slide
	Casement
	Double Glass
	Patio Doors
X	Storms & Screens

(3) Roof

X	Gable		Gambrel
	Hip		Mansard
	Flat		Shed

X	Asphalt Shingle

Chimney:

(3) Roof (cont.)

	Eavestrough
X	Insulation
0	Front Overhang
0	Other Overhang

(4) Interior

X	Drywall		Plaster
	Paneled		Wood T&G

Trim & Decoration

	Ex	X	Ord		Min

Size of Closets

	Lg	X	Ord		Small

Doors:		Solid	X	H.C.	

(5) Floors

Kitchen:
Other: Linoleum
Other: Carpeted

(6) Ceilings

X	Drywall

(7) Excavation

Basement: 0 S.F.
Crawl: 960 S.F.
Slab: 1280 S.F.
Height to Joists: 0.0

(8) Basement

	Conc. Block
	Poured Conc.
	Stone
	Treated Wood
	Concrete Floor

(9) Basement Finish

	Recreation SF
	Living SF
	Walkout Doors (B)
	No Floor SF
	Walkout Doors (A)

(10) Floor Support

Joists:
Unsupported Len:
Cntr.Sup:

(11) Heating/Cooling

X	Gas		Oil		Elec.
	Wood		Coal		Steam

	Forced Air w/o Ducts
X	Forced Air w/ Ducts
	Forced Hot Water
	Electric Baseboard
	Elec. Ceil. Radiant
	Radiant (in-floor)
	Electric Wall Heat
	Space Heater
	Wall/Floor Furnace
	Forced Heat & Cool
	Heat Pump
	No Heating/Cooling

	Central Air
	Wood Furnace

(12) Electric

150	Amps Service

No./Qual. of Fixtures

	Ex.	X	Ord.		Min

No. of Elec. Outlets

	Many	X	Ave.		Few

(13) Plumbing

	Average Fixture(s)
2	3 Fixture Bath
	2 Fixture Bath
	Softener, Auto
	Softener, Manual
	Solar Water Heat
	No Plumbing
	Extra Toilet
	Extra Sink
	Separate Shower
	Ceramic Tile Floor
	Ceramic Tile Wains
	Ceramic Tub Alcove
	Vent Fan

(14) Water/Sewer

	Public Water
	Public Sewer
1	Water Well
1	1000 Gal Septic
	2000 Gal Septic

Lump Sum Items:

(15) Built-ins

	Appliance Allow.
	Cook Top
	Dishwasher
	Garbage Disposal
	Bath Heater
	Vent Fan
	Hot Tub
	Unvented Hood
	Vented Hood
	Intercom
	Jacuzzi Tub
	Jacuzzi repl.Tub
	Oven
	Microwave
	Standard Range
	Self Clean Range
	Sauna
	Trash Compactor
	Central Vacuum
	Security System

(15) Fireplaces

	Interior 1 Story
	Interior 2 Story
	2nd/Same Stack
	Two Sided
	Exterior 1 Story
	Exterior 2 Story
	Prefab 1 Story
	Prefab 2 Story
	Heat Circulator
	Raised Hearth
	Wood Stove
	Direct-Vented Gas

Class: CD
Effec. Age: 13
Floor Area: 2,240
Total Base New : 308,613 E.C.F.
Total Depr Cost: 268,496 X 0.946
Estimated T.C.V: 253,997

(16) Porches/Decks

Area	Type
440	CCP (1 Story)
480	CCP (1 Story)
100	CCP (1 Story)

(17) Garage

Year Built: 2013
Car Capacity:
Class: CD
Exterior: Pole
Brick Ven.: 0
Stone Ven.: 0
Common Wall: Detache
Foundation: 18 Inch
Finished ?:
Auto. Doors: 0
Mech. Doors: 0
Area: 1916
% Good: 0
Storage Area: 0
No Conc. Floor: 0

Bsmnt Garage:

Carport Area:
Roof:

Cost Est. for Res. Bldg: 1 Single Family PLAIN Cls CD Blt 2008
(11) Heating System: Forced Air w/ Ducts
Ground Area = 2240 SF Floor Area = 2240 SF.
Phy/Ab.Phy/Func/Econ/Comb. % Good=87/100/100/100/87
Building Areas

Stories	Exterior	Foundation	Size	Cost New	Depr. Cost
1 Story	Siding	Slab	1,280		
1 Story	Siding	Crawl Space	960		
			Total:	232,670	202,423
Other Additions/Adjustments					
Plumbing					
3 Fixture Bath			1	3,887	3,382
Water/Sewer					
1000 Gal Septic			1	4,582	3,986
Water Well, 100 Feet			1	5,680	4,942
Porches					
CCP (1 Story)			440	9,856	8,575
CCP (1 Story)			480	10,742	9,346
Foundation: Shallow			480	-2,150	-1,870
CCP (1 Story)			100	2,587	2,251
Foundation: Shallow			100	-914	-795
Garages					
Class: CD Exterior: Pole (Unfinished)					
Base Cost			1916	41,673	36,256
			Totals:	308,613	268,496

Notes:

ECF (AG) 0.946 => TCV: 253,997

*** Information herein deemed reliable but not guaranteed***

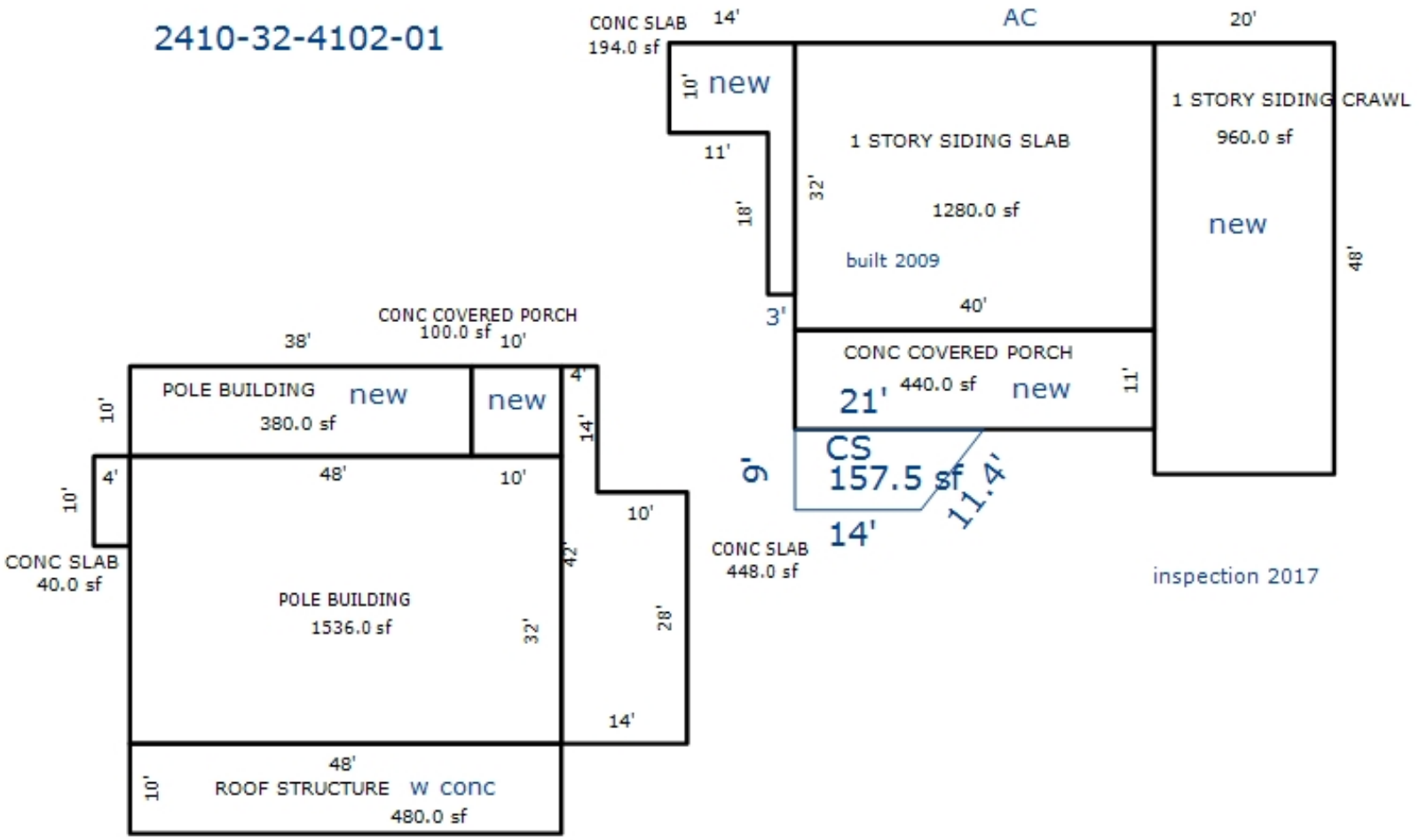

*** Information herein deemed reliable but not guaranteed***

Parcel Number: 2410-32-4401 Jurisdiction: GREENWOOD TWP County: WEXFORD Printed on 02/15/2024

Grantor	Grantee	Sale Price	Sale Date	Inst. Type	Terms of Sale	Liber & Page	Verified By	Prcnt. Trans.
BERRY, CLIFFORD		0	07/28/2013	OTH	21-NOT USED/OTHER	664/1321	DEED	0.0
LAROCHE, ROY	BERRY, CLIFFORD	35,118	10/19/1989	LC	03-ARM'S LENGTH	318:311	DEED	0.0
D'WATER, GEORGE	BERRY, CLIFFORD	35,476	07/25/1988	LC	03-ARM'S LENGTH	312:361	DEED	0.0

Property Address

1821 E 14 RD

Owner's Name/Address

BERRY, AMANDA LE ETAL
1821 E 14 RD
MANTON MI 49663

Tax Description

PAR "B" DESC AS BEG AT SE COR OF SEC; W 1090.01 FT; N 440 FT E 1090.01 FT; S 440 FT TO POB. --11.01 A M/L-- GW. SEC. 32 T24N R10W -MESICK-

Comments/Influences

Class: RESIDENTIAL-IMPROV Zoning:

School: MESICK CONSOLIDATED SCH DIST

P.R.E. 100% / /

:

2024 Est TCV 189,828 TCV/TFA: 139.48

Building Permit(s)	Date	Number	Status
RESIDENTIAL - REMODEL	09/04/2007	PB13674	
RESIDENTIAL - REMODEL	05/02/2006	PB13133	

X	Improved		Vacant

	Public Improvements
	Dirt Road
X	Gravel Road
	Paved Road
	Storm Sewer
	Sidewalk
	Water
	Sewer
X	Electric
	Gas
	Curb
	Street Lights
	Standard Utilities
	Underground Utils.

	Topography of Site
X	Level
X	Rolling
X	Low
	High
	Landscaped
	Swamp
	Wooded
	Pond
	Waterfront
	Ravine
	Wetland
	Flood Plain
X	OPEN

Who	When	What
GLA	05/11/2020	INSPECTION
GLA	07/10/2019	INSPECTION
GLA	07/10/2019	INSPECTION

Land Value Estimates for Land Table 4010.LAND VALUES

Description	Frontage	Depth	* Factors * Front	Depth	Rate	%Adj.	Reason	Value
ACREAGE			9.860 Acres		4,651	100		45,857
ROW			1.150 Acres		0	100		0
			11.01 Total Acres		Total Est. Land Value =			45,857

Year	Land Value	Building Value	Assessed Value	Board of Review	Tribunal/ Other	Taxable Value
2024	22,900	72,000	94,900			29,401C
2023	12,900	59,100	72,000			28,001C
2022	11,900	50,200	62,100			26,668C
2021	12,000	51,100	63,100			25,817C

The Equalizer. Copyright (c) 1999 - 2009.
Licensed To: Township of Greenwood, County of Wexford, Michigan

*** Information herein deemed reliable but not guaranteed***

Building Type

X	Single Family
	Mobile Home
	Town Home
	Duplex
	A-Frame
X	Wood Frame

Building Style: PLAIN

Yr Built	Remodeled
0	0

Condition: Good

Room List

	Basement
	1st Floor
	2nd Floor
	Bedrooms

(1) Exterior

	Wood/Shingle
	Aluminum/Vinyl
	Brick
X	Vinyl
X	Insulation

(2) Windows

X	Many Avg. Few	X	Large Avg. Small

	Wood Sash
	Metal Sash
X	Vinyl Sash
X	Double Hung
X	Horiz. Slide
	Casement
	Double Glass
	Patio Doors
X	Storms & Screens

(3) Roof

X	Gable		Gambrel
	Hip		Mansard
	Flat		Shed

X	Asphalt Shingle

Chimney: Brick

(3) Roof (cont.)

	Eavestrough
X	Insulation
0	Front Overhang
0	Other Overhang

(4) Interior

	Drywall Paneled		Plaster Wood T&G

Trim & Decoration

	Ex		Ord		Min

Size of Closets

	Lg		Ord		Small

Doors:		Solid		H.C.	

(5) Floors

Kitchen:
Other:
Other:

(6) Ceilings

(7) Excavation

Basement: 1107 S.F.
Crawl: 0 S.F.
Slab: 0 S.F.
Height to Joists: 0.0

(8) Basement

	Conc. Block
	Poured Conc.
	Stone
	Treated Wood
	Concrete Floor

(9) Basement Finish

	Recreation	SF
	Living	SF
	Walkout Doors (B)	
	No Floor	SF
	Walkout Doors (A)	

(10) Floor Support

Joists:
Unsupported Len:
Cntr.Sup:

(11) Heating/Cooling

X	Gas		Oil		Elec.
	Wood		Coal		Steam

	Forced Air w/o Ducts
X	Forced Air w/ Ducts
	Forced Hot Water
	Electric Baseboard
	Elec. Ceil. Radiant
	Radiant (in-floor)
	Electric Wall Heat
	Space Heater
	Wall/Floor Furnace
	Forced Heat & Cool
	Heat Pump
	No Heating/Cooling

	Central Air
	Wood Furnace

(12) Electric

150	Amps Service

No./Qual. of Fixtures

	Ex.		Ord.		Min

No. of Elec. Outlets

	Many		Ave.		Few

(13) Plumbing

1	Average Fixture(s)
	3 Fixture Bath
	2 Fixture Bath
	Softener, Auto
	Softener, Manual
	Solar Water Heat
	No Plumbing
	Extra Toilet
	Extra Sink
	Separate Shower
	Ceramic Tile Floor
	Ceramic Tile Wains
	Ceramic Tub Alcove
	Vent Fan

(14) Water/Sewer

	Public Water
	Public Sewer
1	Water Well
1	1000 Gal Septic
	2000 Gal Septic

Lump Sum Items:

(15) Built-ins

	Appliance Allow.
	Cook Top
	Dishwasher
	Garbage Disposal
	Bath Heater
	Vent Fan
	Hot Tub
	Unvented Hood
	Vented Hood
	Intercom
	Jacuzzi Tub
	Jacuzzi repl.Tub
	Oven
	Microwave
	Standard Range
	Self Clean Range
	Sauna
	Trash Compactor
	Central Vacuum
	Security System

(15) Fireplaces

	Interior 1 Story
	Interior 2 Story
	2nd/Same Stack
	Two Sided
	Exterior 1 Story
	Exterior 2 Story
	Prefab 1 Story
	Prefab 2 Story
	Heat Circulator
	Raised Hearth
	Wood Stove
	Direct-Vented Gas

Class: CD
Effec. Age: 48
Floor Area: 1,361
Total Base New : 213,468 E.C.F.
Total Depr Cost: 111,003 X 1.297
Estimated T.C.V: 143,971

(16) Porches/Decks

Area	Type
382	4in Concrete
308	4in Concrete
260	Treated Wood

(17) Garage

Year Built:
Car Capacity:
Class: CD
Exterior: Pole
Brick Ven.: 0
Stone Ven.: 0
Common Wall: Detache
Foundation: 18 Inch
Finished ?:
Auto. Doors: 0
Mech. Doors: 0
Area: 1200
% Good: 0
Storage Area: 0
No Conc. Floor: 0

Bsmnt Garage:

Carport Area:
Roof:

Cost Est. for Res. Bldg: 1 Single Family PLAIN Cls CD Blt 0
(11) Heating System: Forced Air w/ Ducts
Ground Area = 1107 SF Floor Area = 1361 SF.
Phy/Ab.Phy/Func/Econ/Comb. % Good=52/100/100/100/52
Building Areas

Stories	Exterior	Foundation	Size	Cost New	Depr. Cost
1.5 Story	Siding	Basement	508		
1 Story	Siding	Basement	599		
			Total:	164,784	85,687
Other Additions/Adjustments					
Water/Sewer					
1000 Gal Septic			1	4,582	2,383
Water Well, 100 Feet			1	5,680	2,954
Deck					
Treated Wood w/Roof (Deck Portion)			260	4,844	2,519
Treated Wood w/Roof (Roof portion)			260	3,783	1,967
Porches					
4in Concrete			382	2,827	1,470
4in Concrete			308	2,279	1,185
Garages					
Class: CD Exterior: Pole (Unfinished)					
Base Cost			1200	26,100	13,572
Class: CD Exterior: Pole (Unfinished)					
No Concrete Floor			576	-3,542	-1,842
Local Cost Items					
POLE LEANTO DIRT			576	2,131	1,108
			Totals:	213,468	111,003

Notes:
ECF (RESIDENTIAL) 1.297 => TCV: 143,971

*** Information herein deemed reliable but not guaranteed***

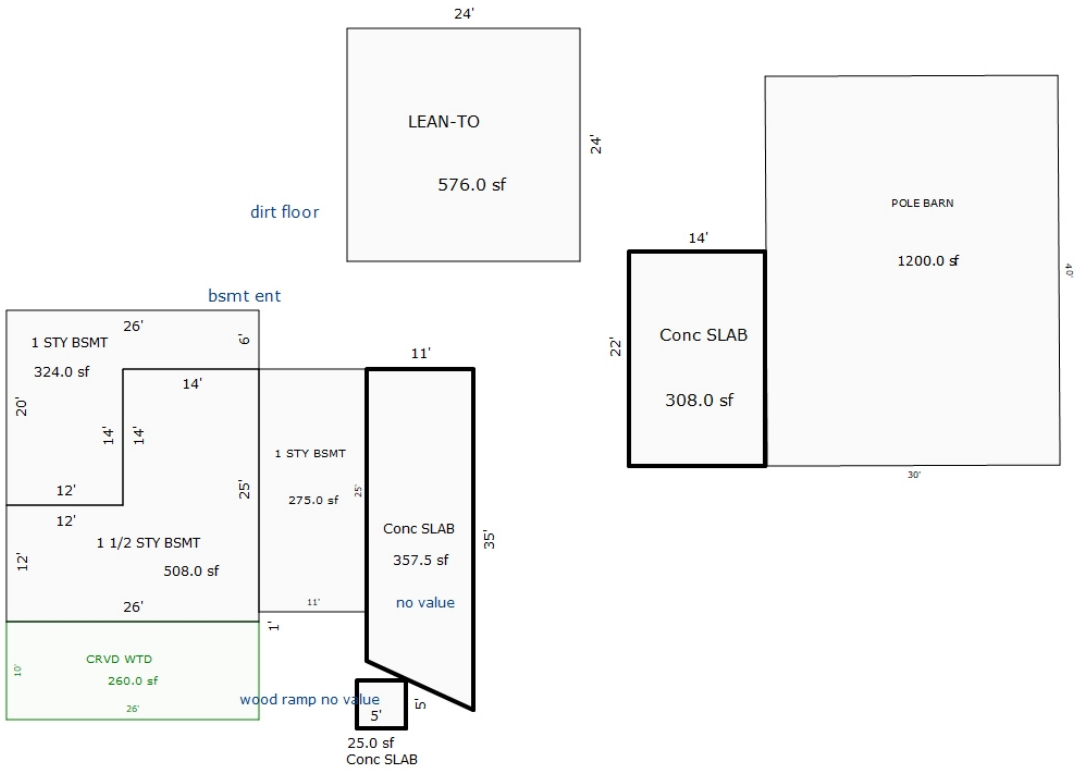

Sketch by Apex Sketch

*** Information herein deemed reliable but not guaranteed***

Parcel Number: 2410-33-1102 Jurisdiction: GREENWOOD TWP County: WEXFORD Printed on 02/15/2024

Grantor	Grantee	Sale Price	Sale Date	Inst. Type	Terms of Sale	Liber & Page	Verified By	Prcnt. Trans.
STIENER, NORMAN D	STIENER, NORMAN D LE ETAL	0	01/15/2013	WD	18-LIFE ESTATE	655/531	DEED	0.0

Property Address

6971 N 31 RD

Owner's Name/Address

STIENER, NORMAN D LE ETAL
HERB & SHIRLEY REED
4994 W 112 ST
GRANT MI 49327

Tax Description

N 320 FT OF E 330 FT OF NE 1/4 2.42 A.
GW. SEC. 33 T24N R10W -MANTON-

Comments/Influences

The Equalizer. Copyright (c) 1999 - 2009.
Licensed To: Township of Greenwood, County of Wexford, Michigan

Class: RESIDENTIAL-IMPROV Zoning:

School: MANTON CONSOLIDATED SCHOOLS

P.R.E. 0%

:

2024 Est TCV 32,829 TCV/TFA: 69.85

Building Permit(s)	Date	Number	Status

X Improved | Vacant

	Public Improvements
	Dirt Road
X	Gravel Road
X	Paved Road
	Storm Sewer
	Sidewalk
	Water
	Sewer
	Electric
	Gas
	Curb
	Street Lights
	Standard Utilities
	Underground Utils.

	Topography of Site
X	Level
	Rolling
X	Low
	High
	Landscaped
	Swamp
	Wooded
	Pond
	Waterfront
	Ravine
	Wetland
	Flood Plain
X	OPEN/PINES

Who	When	What
GLA	05/11/2020	INSPECTION
GLA	07/10/2019	INSPECTION
GLA	07/10/2019	INSPECTION

Land Value Estimates for Land Table 4010.LAND VALUES

Description	Frontage	Depth	* Factors * Front	Depth	Rate	%Adj.	Reason	Value
ACREAGE			2.180 Acres		5,546	100		12,090
ROW			0.240 Acres		0	100		0
			2.42 Total Acres		Total Est. Land Value =			12,090

Year	Land Value	Building Value	Assessed Value	Board of Review	Tribunal/ Other	Taxable Value
2024	6,000	10,400	16,400			6,059C
2023	6,000	8,300	14,300			5,771C
2022	4,900	7,000	11,900			5,497C
2021	5,000	5,900	10,900			5,322C

*** Information herein deemed reliable but not guaranteed***

Building Type

	Single Family
X	Mobile Home
	Town Home
	Duplex
	A-Frame
X	Wood Frame

Building Style: SWT/DWT

Yr Built	Remodeled
0	0

Condition: Good

Room List

	Basement
	1st Floor
	2nd Floor
	Bedrooms

(1) Exterior

	Wood/Shingle
X	Aluminum/Vinyl
	Brick
X	Insulation

(2) Windows

	Many		Large
X	Avg.	X	Avg.
	Few		Small

	Wood Sash
	Metal Sash
X	Vinyl Sash
	Double Hung
	Horiz. Slide
	Casement
	Double Glass
	Patio Doors
X	Storms & Screens

(3) Roof

X	Gable		Gambrel
	Hip		Mansard
	Flat		Shed

X	Asphalt Shingle

Chimney:

(3) Roof (cont.)

	Eavestrough
X	Insulation
0	Front Overhang
0	Other Overhang

(4) Interior

X	Drywall		Plaster
	Paneled		Wood T&G

Trim & Decoration

	Ex	X	Ord		Min

Size of Closets

	Lg	X	Ord		Small

Doors:		Solid	X	H.C.	

(5) Floors

Kitchen:
Other: Linoleum
Other: Carpeted

(6) Ceilings

X	Drywall		

(7) Excavation

Basement: 0 S.F.
Crawl: 0 S.F.
Slab: 0 S.F.
Height to Joists: 0.0

(8) Basement

	Conc. Block
	Poured Conc.
	Stone
	Treated Wood
	Concrete Floor

(9) Basement Finish

	Recreation SF
	Living SF
	Walkout Doors (B)
	No Floor SF
	Walkout Doors (A)

(10) Floor Support

Joists:
Unsupported Len:
Cntr.Sup:

(11) Heating/Cooling

X	Gas		Oil		Elec.
	Wood		Coal		Steam

X	Forced Warm Air
	Wall Furnace
	Warm & Cool Air
	Heat Pump

	Central Air
	Wood Furnace

(12) Electric

150	Amps Service

No./Qual. of Fixtures

	Ex.	X	Ord.		Min

No. of Elec. Outlets

	Many	X	Ave.		Few

(13) Plumbing

	Average Fixture(s)
1	3 Fixture Bath
	2 Fixture Bath
	Softener, Auto
	Softener, Manual
	Solar Water Heat
	No Plumbing
	Extra Toilet
	Extra Sink
	Separate Shower
	Ceramic Tile Floor
	Ceramic Tile Wains
	Ceramic Tub Alcove
	Vent Fan

(14) Water/Sewer

	Public Water
	Public Sewer
1	Water Well
1	1000 Gal Septic
	2000 Gal Septic

Lump Sum Items:

(15) Built-ins

	Appliance Allow.
	Cook Top
	Dishwasher
	Garbage Disposal
	Bath Heater
	Vent Fan
	Hot Tub
	Unvented Hood
	Vented Hood
	Intercom
	Jacuzzi Tub
	Jacuzzi repl.Tub
	Oven
	Microwave
	Standard Range
	Self Clean Range
	Sauna
	Trash Compactor
	Central Vacuum
	Security System

(15) Fireplaces

	Interior 1 Story
	Interior 2 Story
	2nd/Same Stack
	Two Sided
	Exterior 1 Story
	Exterior 2 Story
	Prefab 1 Story
	Prefab 2 Story
	Heat Circulator
	Raised Hearth
	Wood Stove
	Direct-Vented Gas

Class: Low
Effec. Age: 25
Floor Area:
Total Base New : 45,685 E.C.F.
Total Depr Cost: 15,990 X 1.297
Estimated T.C.V: 20,739

(16) Porches/Decks

Area	Type
80	WGEP (1 Story)

(17) Garage

Year Built:
Car Capacity:
Class:
Exterior:
Brick Ven.:
Stone Ven.:
Common Wall:
Foundation:
Finished ?:
Auto. Doors:
Mech. Doors:
Area:
% Good:
Storage Area:
No Conc. Floor:

Bsmnt Garage:

Carport Area:
Roof:

Cost Est. for Res. Bldg: 1 Mobile Home SWT/DWT Cls Low Blt 0
(11) Heating System: Wall Furnace
Ground Area = 470 SF Floor Area = 470 SF.
Phy/Ab.Phy/Func/Econ/Comb. % Good=35/100/100/100/35
Building Areas

Type	Ext. Walls	Roof/Fnd.	Size	Cost New	Depr. Cost
Main Home	Ribbed	Metal	470		
			Total:	28,778	10,072
Other Additions/Adjustments					
Skirting, Metal or Vinyl, Vertical			114	1,238	433
Water/Sewer					
1000 Gal Septic			1	4,293	1,503
Water Well, 100 Feet			1	5,545	1,941
Porches					
WGEP (1 Story)			80	5,831	2,041
			Totals:	45,685	15,990

Notes:

ECF (RESIDENTIAL) 1.297 => TCV: 20,739

*** Information herein deemed reliable but not guaranteed***

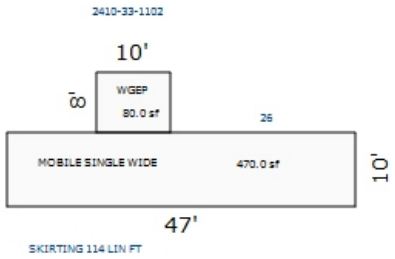

Sketch by Apex Sketch

*** Information herein deemed reliable but not guaranteed***

Parcel Number: 2410-33-1103 Jurisdiction: GREENWOOD TWP County: WEXFORD Printed on 02/15/2024

Grantor	Grantee	Sale Price	Sale Date	Inst. Type	Terms of Sale	Liber & Page	Verified By	Prcnt. Trans.
STIENER, NORMAN	STIENER, NORMAN LE ETAL	0	01/15/2013	WD	18-LIFE ESTATE	655/529	DEED	0.0

Property Address

6889 N 31 RD

Owner's Name/Address

STIENER, NORMAN LE ETAL
4255 CENTRAL RD
MUSKEGON MI 49445

Tax Description

N 716 FT OF E 330 FT OF NE 1/4 EXC N 320 FT. --3 A. M/L GW. SEC. 33 T24N R10W -MANTON-

Comments/Influences

The Equalizer. Copyright (c) 1999 - 2009. Licensed To: Township of Greenwood, County of Wexford, Michigan

Class: RESIDENTIAL-IMPROV Zoning:

School: MANTON CONSOLIDATED SCHOOLS

P.R.E. 0%

:

2024 Est TCV 38,447 TCV/TFA: 46.21

Building Permit(s)	Date	Number	Status

X	Improved		Vacant

	Public Improvements
	Dirt Road
	Gravel Road
X	Paved Road
	Storm Sewer
	Sidewalk
	Water
	Sewer
	Electric
	Gas
	Curb
	Street Lights
	Standard Utilities
	Underground Utils.

	Topography of Site
	Level
	Rolling
X	Low
	High
	Landscaped
	Swamp
	Wooded
	Pond
	Waterfront
	Ravine
	Wetland
	Flood Plain
X	OPEN/PINES

Who	When	What
GLA	05/11/2020	INSPECTION
GLA	07/10/2019	INSPECTION
GLA	07/10/2019	INSPECTION

Land Value Estimates for Land Table 4010.LAND VALUES

Description	Frontage	Depth	* Factors * Front	Depth	Rate	%Adj.	Reason	Value
ACREAGE			2.700 Acres		5,546	100		14,974
ROW			0.300 Acres		0	100		0
			3.00 Total Acres		Total Est. Land Value =			14,974

Year	Land Value	Building Value	Assessed Value	Board of Review	Tribunal/ Other	Taxable Value
2024	7,500	11,700	19,200			10,400C
2023	6,900	9,400	16,300			9,905C
2022	6,000	7,800	13,800			9,434C
2021	5,700	7,900	13,600			9,133C

*** Information herein deemed reliable but not guaranteed***

Building Type

X	Single Family
	Mobile Home
	Town Home
	Duplex
	A-Frame
	Wood Frame
X	Block

Building Style: PLAIN

Yr Built	Remodeled
0	0

Condition: Good

Room List

	Basement
	1st Floor
	2nd Floor
	Bedrooms

(1) Exterior

	Wood/Shingle
	Aluminum/Vinyl
	Brick
X	Block
X	Insulation

(2) Windows

X	Many Avg. Few	X	Large Avg. Small

X	Wood Sash
	Metal Sash
	Vinyl Sash
	Double Hung
	Horiz. Slide
	Casement
	Double Glass
	Patio Doors
X	Storms & Screens

(3) Roof

X	Gable		Gambrel
	Hip		Mansard
	Flat		Shed

X	Asphalt Shingle

Chimney:

(3) Roof (cont.)

	Eavestrough
X	Insulation
0	Front Overhang
0	Other Overhang

(4) Interior

	Drywall Paneled	X	Plaster Wood T&G

Trim & Decoration

	Ex	X	Ord		Min

Size of Closets

	Lg	X	Ord		Small

Doors:		Solid	X	H.C.	

(5) Floors

Kitchen:
Other: Linoleum
Other: Carpeted

(6) Ceilings

X	Plaster

(7) Excavation

Basement: 832 S.F.
Crawl: 0 S.F.
Slab: 0 S.F.
Height to Joists: 0.0

(8) Basement

	Conc. Block
	Poured Conc.
	Stone
	Treated Wood
	Concrete Floor

(9) Basement Finish

	Recreation SF
	Living SF
	Walkout Doors (B)
	No Floor SF
	Walkout Doors (A)

(10) Floor Support

Joists:
Unsupported Len:
Cntr.Sup:

(11) Heating/Cooling

X	Gas		Oil		Elec.
	Wood		Coal		Steam

	Forced Air w/o Ducts
X	Forced Air w/ Ducts
	Forced Hot Water
	Electric Baseboard
	Elec. Ceil. Radiant
	Radiant (in-floor)
	Electric Wall Heat
	Space Heater
	Wall/Floor Furnace
	Forced Heat & Cool
	Heat Pump
	No Heating/Cooling

	Central Air
	Wood Furnace

(12) Electric

150	Amps Service

No./Qual. of Fixtures

	Ex.	X	Ord.		Min

No. of Elec. Outlets

	Many	X	Ave.		Few

(13) Plumbing

1	Average Fixture(s)
	3 Fixture Bath
	2 Fixture Bath
	Softener, Auto
	Softener, Manual
	Solar Water Heat
	No Plumbing
	Extra Toilet
	Extra Sink
	Separate Shower
	Ceramic Tile Floor
	Ceramic Tile Wains
	Ceramic Tub Alcove
	Vent Fan

(14) Water/Sewer

	Public Water
	Public Sewer
1	Water Well
1	1000 Gal Septic
	2000 Gal Septic

Lump Sum Items:

(15) Built-ins

	Appliance Allow.
	Cook Top
	Dishwasher
	Garbage Disposal
	Bath Heater
	Vent Fan
	Hot Tub
	Unvented Hood
	Vented Hood
	Intercom
	Jacuzzi Tub
	Jacuzzi repl.Tub
	Oven
	Microwave
	Standard Range
	Self Clean Range
	Sauna
	Trash Compactor
	Central Vacuum
	Security System

(15) Fireplaces

	Interior 1 Story
	Interior 2 Story
	2nd/Same Stack
	Two Sided
	Exterior 1 Story
	Exterior 2 Story
	Prefab 1 Story
	Prefab 2 Story
	Heat Circulator
	Raised Hearth
	Wood Stove
	Direct-Vented Gas

Class: D
Effec. Age: 65
Floor Area: 832
Total Base New : 125,681 E.C.F.
Total Depr Cost: 18,098 X 1.297
Estimated T.C.V: 23,473

(16) Porches/Decks

Area	Type
182	CSEP (1 Story)
176	CPP

(17) Garage

Year Built:
Car Capacity:
Class:
Exterior:
Brick Ven.:
Stone Ven.:
Common Wall:
Foundation:
Finished ?:
Auto. Doors:
Mech. Doors:
Area:
% Good:
Storage Area:
No Conc. Floor:

Bsmnt Garage:

Carport Area:
Roof:

Cost Est. for Res. Bldg: 1 Single Family PLAIN Cls D Blt 0
(11) Heating System: Forced Air w/ Ducts
Ground Area = 832 SF Floor Area = 832 SF.
Phy/Ab.Phy/Func/Econ/Comb. % Good=45/40/80/100/14.4
Functional Depreciation because of: NEEDS WORK OLD
Building Areas

Stories	Exterior	Foundation	Size	Cost New	Depr. Cost
1 Story	Block	Basement	832		
			Total:	107,097	15,422
Other Additions/Adjustments					
Water/Sewer					
1000 Gal Septic			1	4,200	605
Water Well, 100 Feet			1	5,584	804
Porches					
CSEP (1 Story)			182	6,208	894
CPP			176	2,592	373
			Totals:	125,681	18,098

Notes:

ECF (RESIDENTIAL) 1.297 => TCV: 23,473

*** Information herein deemed reliable but not guaranteed***

2410-33-1103

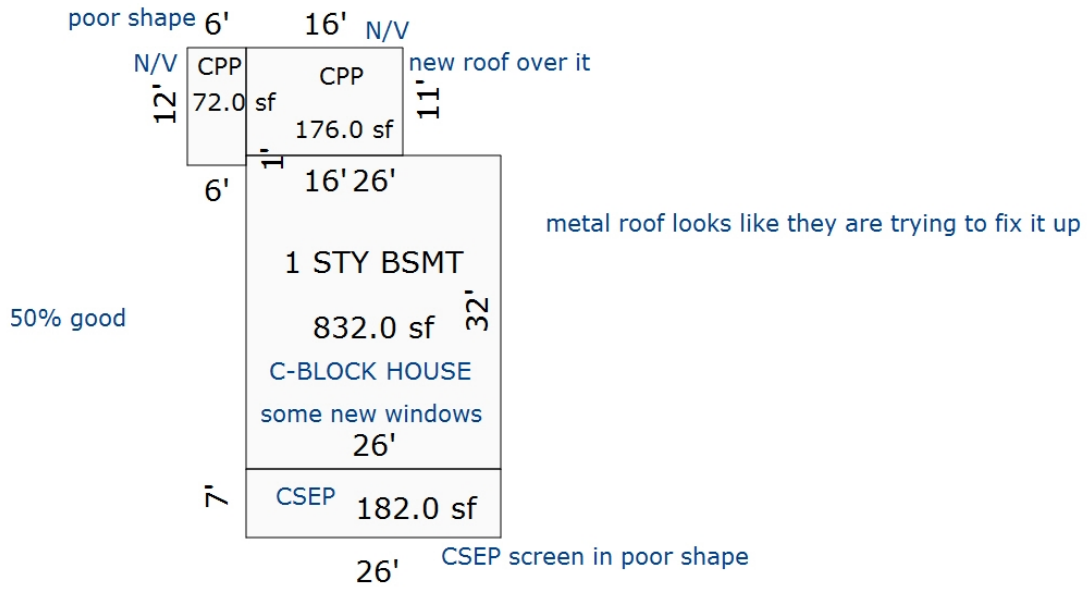

Sketch by Apex Sketch

*** Information herein deemed reliable but not guaranteed***

Parcel Number: 2410-33-1105 Jurisdiction: GREENWOOD TWP County: WEXFORD Printed on 02/15/2024

Grantor	Grantee	Sale Price	Sale Date	Inst. Type	Terms of Sale	Liber & Page	Verified By	Prcnt. Trans.
ZIMMERMAN, KRISTINE M & ST	ZIMMERMAN, KRISTINE M TRUS	0	10/28/2022	QC	14-INTO/OUT OF TRUST	694/834	DEED	0.0
MABRY, JEFFREY LINDEN & RE	ZIMMERMAN, STEVEN A & KRIS	109,099	08/12/2010	WD	03-ARM'S LENGTH	632/509	DEED	100.0
MABRY, ROBERT H ESTATE	MABRY, JEFFREY LINDEN	0	08/13/2009	QC	08-ESTATE	632/506	DEED	0.0
GERKEN, JOHN T TRUSTEE	MABRY, ROBERT H	0	07/11/2008	WD	21-NOT USED/OTHER	632/503	DEED	0.0

Property Address

Owner's Name/Address

ZIMMERMAN, KRISTINE M & STEVEN A
6390 AMY SCHOOL RD
HOWARD CITY MI 49329

Tax Description

PAR B DESC AS COM AT NE COR OF SEC; W 330 FT TO POB: W 570 FT; S 916 FT; E 900 FT; N 200 FT; W 330 FT; N 716 FT TO POB. ALSO PARCEL C; DESC AS COM AT NE COR OF SEC; W 900 FT TO POB: W 1729.98 FT TO N 1/4 COR; S 2227.13 FT; E 1691.14 FT; N 800 FT; E 900 FT TO E SEC LINE; N 511.84 FT; W 900 FT; N 916 FT TO POB. 111.5 A M/L GW SEC 33 T24N R10W -MANTON- [[PART ASSESSED W/33-1101 & 33-1104 '01 [[ASSESSED W/ 33-1401 '06

Comments/Influences

Default Comments

Class: RESIDENTIAL-VACANT Zoning:

School: MANTON CONSOLIDATED SCHOOLS

P.R.E. 0%

:

2024 Est TCV 192,609

Building Permit(s)	Date	Number	Status

	Improved	X	Vacant

	Public Improvements
	Dirt Road
X	Gravel Road
X	Paved Road
	Storm Sewer
	Sidewalk
	Water
	Sewer
	Electric
	Gas
	Curb
	Street Lights
	Standard Utilities
	Underground Utils.

	Topography of Site
	Level
X	Rolling
X	Low
	High
	Landscaped
X	Swamp
X	Wooded
	Pond
	Waterfront
	Ravine
	Wetland
	Flood Plain
X	OPEN/PINES

Who	When	What
GLA	05/11/2020	INSPECTION
GLA	07/10/2019	INSPECTION
GLA	07/10/2019	INSPECTION

Land Value Estimates for Land Table 4010.LAND VALUES

Description	Frontage	Depth	* Factors * Front	Depth	Rate	%Adj.	Reason	Value
ACREAGE			110.950 Acres		2,480	70	SWAMPY/SHAPE	192,609
ROW			0.550 Acres		0	100		0
			111.50 Total Acres		Total Est. Land Value =			192,609

Year	Land Value	Building Value	Assessed Value	Board of Review	Tribunal/ Other	Taxable Value
2024	96,300	0	96,300			65,612C
2023	73,800	0	73,800			62,488C
2022	66,000	0	66,000			59,513C
2021	58,200	0	58,200			57,612C

The Equalizer. Copyright (c) 1999 - 2009.
Licensed To: Township of Greenwood, County of Wexford, Michigan

*** Information herein deemed reliable but not guaranteed***

Parcel Number: 2410-33-1301-01 Jurisdiction: GREENWOOD TWP County: WEXFORD Printed on 02/15/2024

Grantor	Grantee	Sale Price	Sale Date	Inst. Type	Terms of Sale	Liber & Page	Verified By	Prcnt. Trans.
FIRST NATIONAL ACCEPTANCE	MITCHELL, DAVID W & PEGGY	0	01/03/2017	WD	16-LC PAYOFF	6795/44	DEED	0.0
ANGEL, ANNETTE	MITCHELL, DAVID W & PEGGY	74,000	12/06/2011	LC	03-ARM'S LENGTH	644/140	DEED	100.0
MITCHELL, PEGGY	MITCHELL, DAVID W	74,000	12/06/2011	QC	09-FAMILY	644/239	DEED	0.0
MOORE, RONALD & JANE	ANGEL, ANNETTE	81,000	10/14/2009	WD	03-ARM'S LENGTH	625/85	DEED	100.0

Property Address

6565 N 31 RD

Owner's Name/Address

MITCHELL, DAVID W & PEGGY
6565 N 31 RD
MANTON MI 49663

Tax Description

E 1090 FT OF S 400 FT OF NE 1/4 -10 A. M/L G.W. SEC. 33 T24N R10W -MANTON- SPLIT ON 08/27/2007 FROM 2410-33-1301;

Comments/Influences

Default Comments
SPLIT/COMB. ON 08/27/2007 COMPLETED 12/01/2008 DEB OWNER REQUEST ;
PARENT PARCEL(S): 2410-33-1301;
CHILD PARCEL(S): 2410-33-1301-01;

The Equalizer. Copyright (c) 1999 - 2009.
Licensed To: Township of Greenwood, County of Wexford, Michigan

Class: RESIDENTIAL-IMPROV Zoning:
School: MANTON CONSOLIDATED SCHOOLS
P.R.E. 100% 12/10/2008
:
2024 Est TCV 126,781 TCV/TFA: 106.72

Building Permit(s)	Date	Number	Status
RESIDENTIAL - REMODEL	07/20/2001	PM5109	

X	Improved		Vacant

	Public Improvements
	Dirt Road
X	Gravel Road
X	Paved Road
	Storm Sewer
	Sidewalk
	Water
	Sewer
	Electric
	Gas
	Curb
	Street Lights
	Standard Utilities
	Underground Utils.

	Topography of Site
	Level
X	Rolling
X	Low
	High
	Landscaped
	Swamp
X	Wooded
	Pond
	Waterfront
	Ravine
	Wetland
	Flood Plain
X	OPEN/PINES

Who	When	What
GLA	05/11/2020	INSPECTION
GLA	07/10/2019	INSPECTION
GLA	07/10/2019	INSPECTION

Land Value Estimates for Land Table 4010.LAND VALUES

Description	Frontage	Depth	* Factors * Front	Depth	Rate	%Adj.	Reason	Value
HELSEL RIV LOW	400.00	1090.00	1.0000	0.0000	315	100*		0
ACREAGE			9.700 Acres		4,669	100		45,293
ROW			0.300 Acres		0	100		0

* denotes lines that do not contribute to the total acreage calculation.
400 Actual Front Feet, 10.00 Total Acres Total Est. Land Value = 45,293

Land Improvement Cost Estimates

Description	Rate	Size	% Good	Cash Value
D/W/P: 4in Concrete	6.11	90	10	55
Wood Frame	22.35	120	16	429
Total Estimated Land Improvements True Cash Value =				484

Year	Land Value	Building Value	Assessed Value	Board of Review	Tribunal/ Other	Taxable Value
2024	22,600	40,800	63,400			35,418C
2023	12,900	32,900	45,800			33,732C
2022	11,900	27,400	39,300			32,126C
2021	12,000	23,500	35,500			31,100C

*** Information herein deemed reliable but not guaranteed***

Building Type

	Single Family
X	Mobile Home
	Town Home
	Duplex
	A-Frame

X	Wood Frame

Building Style: SWT/DWT

Yr Built	Remodeled
1998	0

Condition: Fair

Room List

	Basement
	1st Floor
	2nd Floor
3	Bedrooms

(1) Exterior

	Wood/Shingle
	Aluminum/Vinyl
	Brick
X	Vinyl
	Insulation

(2) Windows

X	Many	X	Large
	Avg.		Avg.
	Few		Small

	Wood Sash
	Metal Sash
	Vinyl Sash
X	Double Hung
	Horiz. Slide
	Casement
	Double Glass
	Patio Doors
X	Storms & Screens

(3) Roof

X	Gable		Gambrel
	Hip		Mansard
	Flat		Shed

X	Asphalt Shingle

Chimney: Metal

(3) Roof (cont.)

	Eavestrough
	Insulation
0	Front Overhang
0	Other Overhang

(4) Interior

	Drywall		Plaster
	Paneled		Wood T&G

Trim & Decoration

	Ex		Ord		Min

Size of Closets

	Lg		Ord		Small

Doors:		Solid		H.C.	

(5) Floors

Kitchen:
Other:
Other:

(6) Ceilings

(7) Excavation

Basement: 0 S.F.
Crawl: 0 S.F.
Slab: 0 S.F.
Height to Joists: 0.0

(8) Basement

	Conc. Block
	Poured Conc.
	Stone
	Treated Wood
	Concrete Floor

(9) Basement Finish

	Recreation	SF
	Living	SF
	Walkout Doors	(B)
	No Floor	SF
	Walkout Doors	(A)

(10) Floor Support

Joists:
Unsupported Len:
Cntr.Sup:

(11) Heating/Cooling

X	Gas		Oil		Elec.
	Wood		Coal		Steam

	Forced Warm Air
	Wall Furnace
X	Warm & Cool Air
	Heat Pump

X	Central Air
	Wood Furnace

(12) Electric

0	Amps Service

No./Qual. of Fixtures

	Ex.		Ord.		Min

No. of Elec. Outlets

	Many		Ave.		Few

(13) Plumbing

	Average Fixture(s)
2	3 Fixture Bath
	2 Fixture Bath
	Softener, Auto
	Softener, Manual
	Solar Water Heat
	No Plumbing
	Extra Toilet
	Extra Sink
	Separate Shower
	Ceramic Tile Floor
	Ceramic Tile Wains
	Ceramic Tub Alcove
	Vent Fan

(14) Water/Sewer

	Public Water
	Public Sewer
1	Water Well
1	1000 Gal Septic
	2000 Gal Septic

Lump Sum Items:

(15) Built-ins

	Appliance Allow.
	Cook Top
	Dishwasher
	Garbage Disposal
	Bath Heater
	Vent Fan
	Hot Tub
	Unvented Hood
	Vented Hood
	Intercom
	Jacuzzi Tub
	Jacuzzi repl.Tub
	Oven
	Microwave
	Standard Range
	Self Clean Range
	Sauna
	Trash Compactor
	Central Vacuum
	Security System

(15) Fireplaces

	Interior 1 Story
	Interior 2 Story
	2nd/Same Stack
	Two Sided
	Exterior 1 Story
	Exterior 2 Story
	Prefab 1 Story
	Prefab 2 Story
	Heat Circulator
	Raised Hearth
	Wood Stove
	Direct-Vented Gas

Class: Fair
Effec. Age: 20
Floor Area:
Total Base New : 135,773 E.C.F.
Total Depr Cost: 62,455 X 1.297
Estimated T.C.V: 81,004

(16) Porches/Decks

Area	Type
90	4in Concrete
16	WPP
200	Treated Wood

(17) Garage

Year Built:
Car Capacity:
Class: D
Exterior: Siding
Brick Ven.: 0
Stone Ven.: 0
Common Wall: Detache
Foundation: 18 Inch
Finished ?:
Auto. Doors: 0
Mech. Doors: 0
Area: 1440
% Good: 0
Storage Area: 0
No Conc. Floor: 0

Bsmnt Garage:

Carport Area:
Roof:

Cost Est. for Res. Bldg: 1 Mobile Home SWT/DWT Cls Fair Blt 1998
(11) Heating System: Warm & Cool Air, Air Conditioning
Ground Area = 1188 SF Floor Area = 1188 SF.
Phy/Ab.Phy/Func/Econ/Comb. % Good=46/100/100/100/46
Building Areas

Type	Ext. Walls	Roof/Fnd.	Size	Cost New	Depr. Cost
Main Home	Siding	Comp.Shingle	1188		
			Total:	76,257	35,077
Other Additions/Adjustments					
Skirting, Concrete Block			134	2,523	1,161
Plumbing					
3 Fixture Bath			1	2,745	1,263
Water/Sewer					
1000 Gal Septic			1	4,582	2,108
Water Well, 100 Feet			1	5,680	2,613
Deck					
Treated Wood			200	4,064	1,869
Porches					
WPP			16	805	370
4in Concrete			90	666	306
Garages					
Class: D Exterior: Siding Foundation: 18 Inch (Unfinished)					
Base Cost			1440	36,907	16,977
Local Cost Items					
SHED			120	936	431
FREE STANDING ROOF			84	608	280
			Totals:	135,773	62,455

Notes:
ECF (RESIDENTIAL) 1.297 => TCV: 81,004

*** Information herein deemed reliable but not guaranteed***

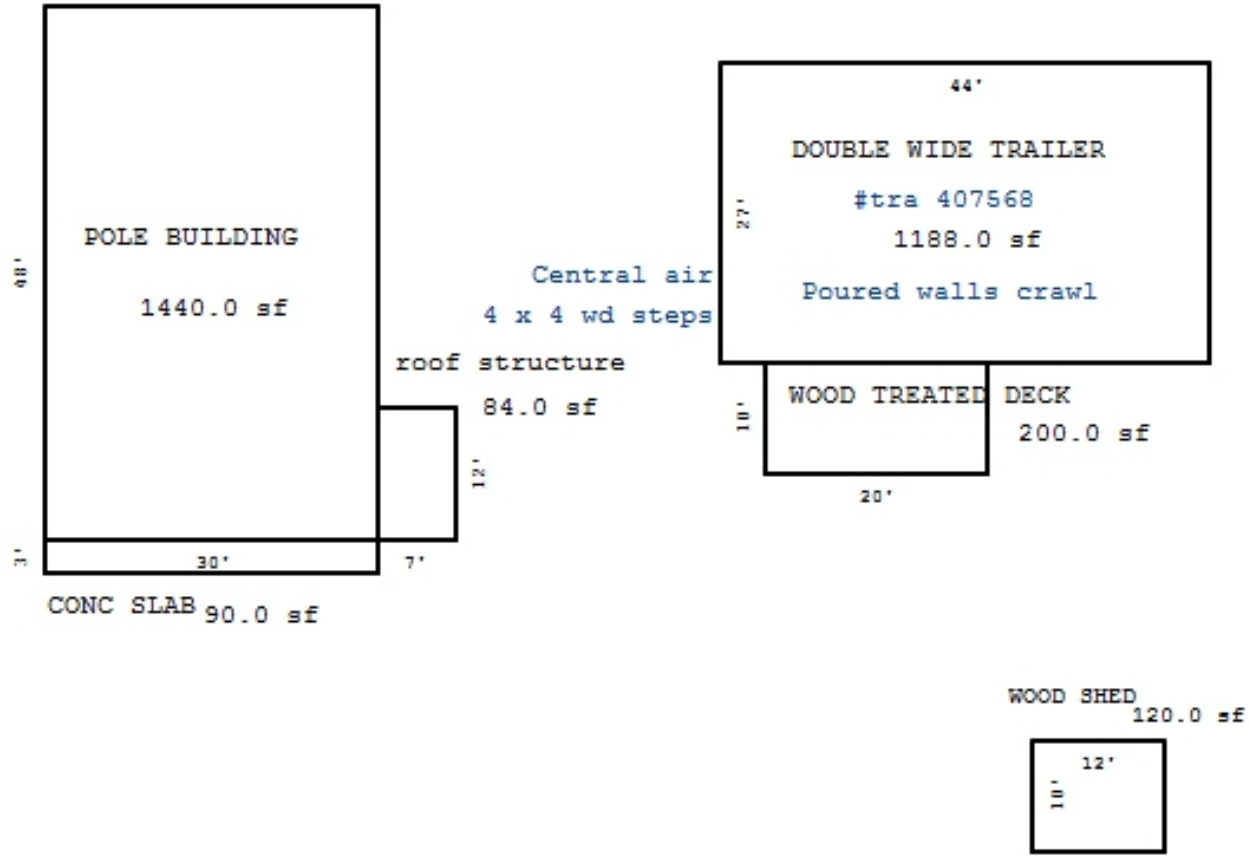

Sketch by Apex Sketch

*** Information herein deemed reliable but not guaranteed***

Parcel Number: 2410-33-1401 Jurisdiction: GREENWOOD TWP County: WEXFORD Printed on 02/15/2024

Grantor	Grantee	Sale Price	Sale Date	Inst. Type	Terms of Sale	Liber & Page	Verified By	Prcnt. Trans.
KOCH, LARRY E	KOCH, LARRY E & DIANE M TR	0	09/29/2015	WD	18-LIFE ESTATE	676/522	DEED	0.0
ZIMMERMAN, STEVE A & KRIST	KOCH, LARRY E & DIANE M	0	08/19/2010	QC	21-NOT USED/OTHER	633/603	DEED	0.0
MABRY, ROBERT H.	KOCH, LARRY & DIANE	135,000	10/30/2006	WD	31-SPLIT IMPROVED	594:1578	DEED	0.0
MABRY, ROBERT ETAL	MABRY, ROBERT & PAULETTE	0	04/21/2006	QC	09-FAMILY	586/2463	DEED	0.0

Property Address

6637 N 31 RD

Owner's Name/Address

KOCH, LARRY E & DIANE M TRUST
6637 N 31 RD
MANTON MI 49663

Tax Description

PARCEL A DESC AS COM AT E 1/4 OF SEC; N 400 FT TO POB: N 800 FT; W 900 FT; S 800 FT; E 900 FT TO POB. --16.5 A M/L-- GW SEC 33 T24N R10W -MANTON- [[PART ASSESSED W/33-1101 & 33-1104 '01

Comments/Influences

Class: RESIDENTIAL-IMPROV Zoning:

School: MANTON CONSOLIDATED SCHOOLS

P.R.E. 100% / /

:

2024 Est TCV 169,033 TCV/TFA: 125.77

Building Permit(s)	Date	Number	Status
RESIDENTIAL - REMODEL	04/09/2001	PB10161	

X	Improved		Vacant

	Public Improvements
	Dirt Road
	Gravel Road
X	Paved Road
	Storm Sewer
	Sidewalk
	Water
	Sewer
	Electric
	Gas
	Curb
	Street Lights
	Standard Utilities
	Underground Utils.

	Topography of Site
	Level
X	Rolling
X	Low
	High
	Landscaped
X	Swamp
X	Wooded
	Pond
	Waterfront
	Ravine
	Wetland
	Flood Plain
X	OPEN/PINES

Who	When	What
GLA	05/11/2020	INSPECTION
GLA	07/10/2019	INSPECTION
GLA	07/10/2019	INSPECTION

Land Value Estimates for Land Table 4010.LAND VALUES

Description	Frontage	Depth	* Factors * Front	Depth	Rate	%Adj.	Reason	Value
ACREAGE			15.900 Acres		3,200	100		50,880
ROW			0.600 Acres		0	100		0
			16.50 Total Acres		Total Est. Land Value =			50,880

Land Improvement Cost Estimates

Description	Rate	Size	% Good	Cash Value
D/W/P: 4in Concrete	7.01	144	42	424
D/W/P: 4in Concrete	7.01	28	42	82
D/W/P: 4in Concrete	7.01	9	42	26
Wood Frame	26.52	160	49	2,079
Wood Frame	26.52	160	49	2,079
Total Estimated Land Improvements True Cash Value =				4,690

Year	Land Value	Building Value	Assessed Value	Board of Review	Tribunal/ Other	Taxable Value
2024	25,400	59,100	84,500			46,715C
2023	20,700	48,000	68,700			44,491C
2022	18,100	40,300	58,400			42,373C
2021	18,400	34,700	53,100			41,020C

The Equalizer. Copyright (c) 1999 - 2009.
Licensed To: Township of Greenwood, County of Wexford, Michigan

*** Information herein deemed reliable but not guaranteed***

Building Type

	Single Family
X	Mobile Home
	Town Home
	Duplex
	A-Frame

X	Wood Frame

Building Style: PLAIN

Yr Built	Remodeled
1997	0

Condition: Good

Room List

	Basement
	1st Floor
	2nd Floor
	Bedrooms

(1) Exterior

	Wood/Shingle
X	Aluminum/Vinyl
	Brick
X	Insulation

(2) Windows

	Many		Large
X	Avg.	X	Avg.
	Few		Small

	Wood Sash
	Metal Sash
X	Vinyl Sash
	Double Hung
	Horiz. Slide
	Casement
	Double Glass
	Patio Doors
X	Storms & Screens

(3) Roof

X	Gable		Gambrel
	Hip		Mansard
	Flat		Shed

X	Asphalt Shingle

Chimney:

(3) Roof (cont.)

	Eavestrough
X	Insulation
0	Front Overhang
0	Other Overhang

(4) Interior

X	Drywall		Plaster
	Paneled		Wood T&G

Trim & Decoration

	Ex	X	Ord		Min

Size of Closets

	Lg	X	Ord		Small

Doors:		Solid	X	H.C.	

(5) Floors

Kitchen:
Other: Linoleum
Other: Carpeted

(6) Ceilings

X	Drywall

(7) Excavation

Basement: 0 S.F.
Crawl: 0 S.F.
Slab: 0 S.F.
Height to Joists: 0.0

(8) Basement

	Conc. Block
	Poured Conc.
	Stone
	Treated Wood
	Concrete Floor

(9) Basement Finish

	Recreation SF
	Living SF
	Walkout Doors (B)
	No Floor SF
	Walkout Doors (A)

(10) Floor Support

Joists:
Unsupported Len:
Cntr.Sup:

(11) Heating/Cooling

X	Gas		Oil		Elec.
	Wood		Coal		Steam

X	Forced Warm Air
	Wall Furnace
	Warm & Cool Air
	Heat Pump

X	Central Air
	Wood Furnace

(12) Electric

150	Amps Service

No./Qual. of Fixtures

	Ex.	X	Ord.		Min

No. of Elec. Outlets

	Many	X	Ave.		Few

(13) Plumbing

2	Average Fixture(s)
	3 Fixture Bath
	2 Fixture Bath
	Softener, Auto
	Softener, Manual
	Solar Water Heat
	No Plumbing
	Extra Toilet
	Extra Sink
	Separate Shower
	Ceramic Tile Floor
	Ceramic Tile Wains
	Ceramic Tub Alcove
	Vent Fan

(14) Water/Sewer

	Public Water
	Public Sewer
1	Water Well
1	1000 Gal Septic
	2000 Gal Septic

Lump Sum Items:

(15) Built-ins

	Appliance Allow.
	Cook Top
	Dishwasher
	Garbage Disposal
	Bath Heater
	Vent Fan
	Hot Tub
	Unvented Hood
	Vented Hood
	Intercom
	Jacuzzi Tub
	Jacuzzi repl.Tub
	Oven
	Microwave
	Standard Range
	Self Clean Range
	Sauna
	Trash Compactor
	Central Vacuum
	Security System

(15) Fireplaces

	Interior 1 Story
	Interior 2 Story
	2nd/Same Stack
	Two Sided
	Exterior 1 Story
	Exterior 2 Story
	Prefab 1 Story
	Prefab 2 Story
	Heat Circulator
	Raised Hearth
	Wood Stove
	Direct-Vented Gas

Class: Fair
Effec. Age: 20
Floor Area:
Total Base New : 190,272 E.C.F.
Total Depr Cost: 87,481 X 1.297
Estimated T.C.V: 113,463

(16) Porches/Decks

Area	Type
240	WCP (1 Story)
2693	4in Concrete
240	CCP (1 Story)
192	Treated Wood

(17) Garage

Year Built:
Car Capacity:
Class: CD
Exterior: Siding
Brick Ven.: 0
Stone Ven.: 0
Common Wall: 1 Wall
Foundation: 42 Inch
Finished ?:
Auto. Doors: 0
Mech. Doors: 0
Area: 728
% Good: 0
Storage Area: 0
No Conc. Floor: 0

Bsmnt Garage:

Carport Area:
Roof:

Cost Est. for Res. Bldg: 1 Mobile Home PLAIN Cls Fair Blt 1997
(11) Heating System: Forced Warm Air, Air Conditioning
Ground Area = 1344 SF Floor Area = 1344 SF.
Phy/Ab.Phy/Func/Econ/Comb. % Good=46/100/100/100/46
Building Areas

Type	Ext. Walls	Roof/Fnd.	Size	Cost New	Depr. Cost	
Main Home	Siding	Comp.Shingle	1344			
			Total:	77,688	35,736	
Other Additions/Adjustments						
42" frost-free footings, foundation			152	8,483	3,902	
Plumbing						
3 Fixture Bath			1	2,745	1,263	
Water/Sewer						
1000 Gal Septic			1	4,582	2,108	
Water Well, 100 Feet			1	5,680	2,613	
Porches						
WCP (1 Story)			240	7,771	3,575	
CCP (1 Story)			240	4,850	2,231	
4in Concrete			2693	19,928	9,167	
Deck						
Treated Wood			192	3,963	1,823	
Garages						
Class: CD Exterior: Siding Foundation: 42 Inch (Unfinished)						
Base Cost			728	26,448	12,166	
Common Wall: 1 Wall			1	-2,529	-1,163	
Class: CD Exterior: Pole (Unfinished)						
Base Cost			1200	26,100	12,006	
Local Cost Items						
SHED			288	2,246	1,011	*4
FREE STANDING ROOF			320	2,317	1,043	*4

<<<<< Calculations too long. See Valuation printout for complete pricing. >>>>>

*** Information herein deemed reliable but not guaranteed***

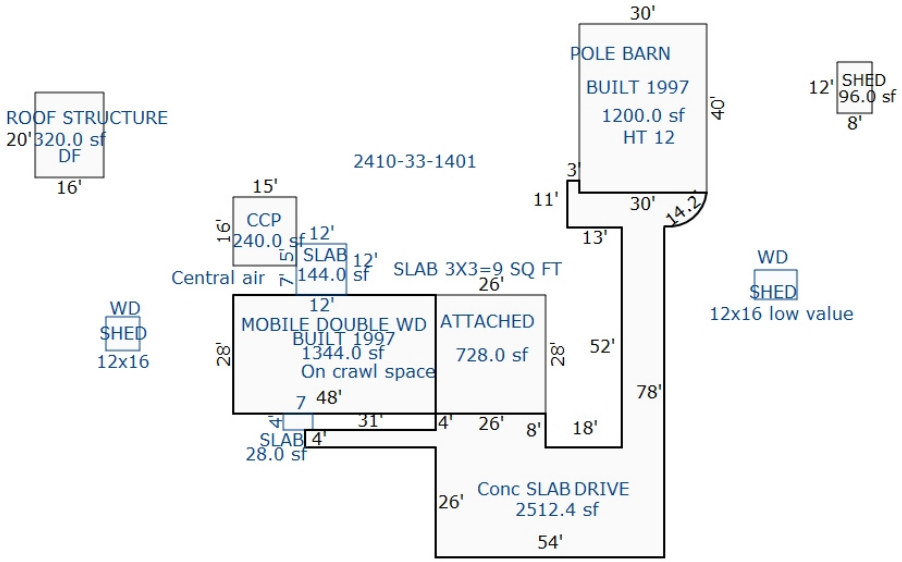

Sketch by Apex Sketch

*** Information herein deemed reliable but not guaranteed***

Parcel Number: 2410-33-2101 Jurisdiction: GREENWOOD TWP County: WEXFORD Printed on 02/15/2024

Grantor	Grantee	Sale Price	Sale Date	Inst. Type	Terms of Sale	Liber & Page	Verified By	Prcnt. Trans.

Property Address	Class: AGRICULTURAL-VACAN	Zoning:	Building Permit(s)	Date	Number	Status
	School: MESICK CONSOLIDATED SCH DIST					
Owner's Name/Address	P.R.E. 0%					
	:					
STATE OF MICHIGAN P O BOX 30735 GRANTS ADMINISTRATION LANSING MI 48909-8235	2024 Est TCV 0					

	Improved	X	Vacant

Land Value Estimates for Land Table 4010.LAND VALUES

Description	Frontage	Depth	* Factors * Front	Depth	Rate	%Adj.	Reason	Value
ACREAGE			240.000	Acres	2,480	100		595,200
			240.00	Total Acres			Total Est. Land Value =	595,200

	Public Improvements
	Dirt Road
X	Gravel Road
X	Paved Road
	Storm Sewer
	Sidewalk
	Water
	Sewer
	Electric
	Gas
	Curb
	Street Lights
	Standard Utilities
	Underground Utils.

	Topography of Site
	Level
X	Rolling
X	Low
	High
	Landscaped
X	Swamp
X	Wooded
	Pond
	Waterfront
	Ravine
	Wetland
	Flood Plain
X	OPEN/PINES

Who	When	What
GLA	05/11/2020	INSPECTION
GLA	07/10/2019	INSPECTION
GLA	07/10/2019	INSPECTION

Year	Land Value	Building Value	Assessed Value	Board of Review	Tribunal/ Other	Taxable Value
2024	EXEMPT	EXEMPT	EXEMPT			EXEMPT
2023	EXEMPT	EXEMPT	EXEMPT			EXEMPT
2022	0	0	0			0
2021	0	0	0			0

Tax Description

NW 1/4; NE 1/4 OF SW 1/4 & NW 1/4 OF SE 1/4 --240 A. -- GW. SEC. 33 T24N R10W -MESICK-

Comments/Influences

The Equalizer. Copyright (c) 1999 - 2009. Licensed To: Township of Greenwood, County of Wexford, Michigan

*** Information herein deemed reliable but not guaranteed***

Parcel Number: 2410-33-3201 Jurisdiction: GREENWOOD TWP County: WEXFORD Printed on 02/15/2024

Grantor	Grantee	Sale Price	Sale Date	Inst. Type	Terms of Sale	Liber & Page	Verified By	Prcnt. Trans.
FEDERAL NATIONAL MORTGAGE	FLINTOFF, ALEX & MARCIA	69,000	09/11/2009	WD	11-FROM LENDING INSTITUTI	624/1293	DEED	100.0
CHASE HOME FINANCE LLC	FEDERAL NATIONAL MORTGAGE	0	03/15/2009	QC	17-LENDING TO LENDING	619/724	DEED	0.0
DUBERVILLE, MARK & MARTHA	CHASE HOME FINANCE LLC	80,973	02/06/2009	SD	10-FORECLOSURE	617/2775	DEED	0.0
DUBERVILLE, MARK	DUBERVILLE, MARK & MARTHA	0	07/11/2006	QC	09-FAMILY	589/2526	DEED	0.0

Property Address

6406 N 29 RD

Owner's Name/Address

FLINTOFF, ALEX & MARCIA
6406 N 29 RD
MANTON MI 49663

Tax Description

N 1/2 OF NW 1/4 OF SW 1/4 TOG WITH ESMNT OVER THE W 33 FT OF S 1/2 OF NW 1/4 OF SW 1/4 --20 A. M/L-- GW. SEC. 33 T24N R10W -MESICK-

Comments/Influences

Class: RESIDENTIAL-IMPROV Zoning:

School: MESICK CONSOLIDATED SCH DIST

P.R.E. 100% 04/30/2010

:

2024 Est TCV 168,715 TCV/TFA: 162.23

Building Permit(s)	Date	Number	Status

X	Improved		Vacant

	Public Improvements
	Dirt Road
	Gravel Road
X	Paved Road
	Storm Sewer
	Sidewalk
	Water
	Sewer
	Electric
	Gas
	Curb
	Street Lights
	Standard Utilities
	Underground Utils.

	Topography of Site
	Level
X	Rolling
X	Low
	High
	Landscaped
X	Swamp
X	Wooded
	Pond
	Waterfront
	Ravine
	Wetland
	Flood Plain
X	OPEN/PINES

Who	When	What
GLA	05/11/2020	INSPECTION
GLA	07/10/2019	INSPECTION
GLA	07/10/2019	INSPECTION

Land Value Estimates for Land Table 4010.LAND VALUES

Description	Frontage	Depth	* Factors * Front	Depth	Rate	%Adj.	Reason	Value
	300.00	0.00	1.0000	1.0000	0	100		0
ACREAGE			20.000	Acres	3,200	100		64,000
300 Actual Front Feet, 20.00 Total Acres							Total Est. Land Value =	64,000

Land Improvement Cost Estimates

Description	Rate	Size	% Good	Cash Value
Wood Frame	28.93	80	20	463
Wood Frame	28.93	80	20	463
Total Estimated Land Improvements True Cash Value =				926

Year	Land Value	Building Value	Assessed Value	Board of Review	Tribunal/ Other	Taxable Value
2024	32,000	52,400	84,400			50,635C
2023	26,000	43,200	69,200			48,224C
2022	22,600	36,900	59,500			45,928C
2021	20,600	37,700	58,300			44,461C

The Equalizer. Copyright (c) 1999 - 2009.
Licensed To: Township of Greenwood, County of Wexford, Michigan

*** Information herein deemed reliable but not guaranteed***

Building Type

X	Single Family
	Mobile Home
	Town Home
	Duplex
	A-Frame
X	Wood Frame

Building Style: PLAIN

Yr Built	Remodeled
0	0

Condition: Good

Room List

	Basement
	1st Floor
	2nd Floor
	Bedrooms

(1) Exterior

X	Wood/Shingle
	Aluminum/Vinyl
	Brick
X	Insulation

(2) Windows

	Many		Large
X	Avg.	X	Avg.
	Few		Small

X	Wood Sash
	Metal Sash
	Vinyl Sash
	Double Hung
	Horiz. Slide
	Casement
	Double Glass
	Patio Doors
X	Storms & Screens

(3) Roof

X	Gable		Gambrel
	Hip		Mansard
	Flat		Shed

X	Asphalt Shingle

Chimney:

(3) Roof (cont.)

	Eavestrough
X	Insulation
0	Front Overhang
0	Other Overhang

(4) Interior

X	Drywall		Plaster
	Paneled		Wood T&G

Trim & Decoration

	Ex	X	Ord		Min

Size of Closets

	Lg	X	Ord		Small

Doors:		Solid	X	H.C.	

(5) Floors

Kitchen:
Other: Linoleum
Other: Carpeted

(6) Ceilings

X	Drywall

(7) Excavation

Basement: 0 S.F.
Crawl: 1040 S.F.
Slab: 0 S.F.
Height to Joists: 0.0

(8) Basement

	Conc. Block
	Poured Conc.
	Stone
	Treated Wood
	Concrete Floor

(9) Basement Finish

	Recreation SF
	Living SF
	Walkout Doors (B)
	No Floor SF
	Walkout Doors (A)

(10) Floor Support

Joists:
Unsupported Len:
Cntr.Sup:

(11) Heating/Cooling

X	Gas		Oil		Elec.
	Wood		Coal		Steam

	Forced Air w/o Ducts
X	Forced Air w/ Ducts
	Forced Hot Water
	Electric Baseboard
	Elec. Ceil. Radiant
	Radiant (in-floor)
	Electric Wall Heat
	Space Heater
	Wall/Floor Furnace
	Forced Heat & Cool
	Heat Pump
	No Heating/Cooling
	Central Air
	Wood Furnace

(12) Electric

150	Amps Service

No./Qual. of Fixtures

	Ex.	X	Ord.		Min

No. of Elec. Outlets

	Many	X	Ave.		Few

(13) Plumbing

	Average Fixture(s)
1	3 Fixture Bath
	2 Fixture Bath
	Softener, Auto
	Softener, Manual
	Solar Water Heat
	No Plumbing
	Extra Toilet
	Extra Sink
	Separate Shower
	Ceramic Tile Floor
	Ceramic Tile Wains
	Ceramic Tub Alcove
	Vent Fan

(14) Water/Sewer

	Public Water
	Public Sewer
1	Water Well
1	1000 Gal Septic
	2000 Gal Septic

Lump Sum Items:

(15) Built-ins

	Appliance Allow.
	Cook Top
	Dishwasher
	Garbage Disposal
	Bath Heater
	Vent Fan
	Hot Tub
	Unvented Hood
	Vented Hood
	Intercom
	Jacuzzi Tub
	Jacuzzi repl.Tub
	Oven
	Microwave
	Standard Range
	Self Clean Range
	Sauna
	Trash Compactor
	Central Vacuum
	Security System

(15) Fireplaces

	Interior 1 Story
	Interior 2 Story
	2nd/Same Stack
	Two Sided
	Exterior 1 Story
	Exterior 2 Story
	Prefab 1 Story
	Prefab 2 Story
	Heat Circulator
	Raised Hearth
	Wood Stove
	Direct-Vented Gas

Class: CD
Effec. Age: 54
Floor Area: 1,040
Total Base New : 173,961 E.C.F.
Total Depr Cost: 80,022 X 1.297
Estimated T.C.V: 103,789

(16) Porches/Decks

Area	Type
460	WCP (1 Story)
36	4in Concrete
84	WGEP (1 Story)

(17) Garage

Year Built:
Car Capacity:
Class:
Exterior:
Brick Ven.:
Stone Ven.:
Common Wall:
Foundation:
Finished ?:
Auto. Doors:
Mech. Doors:
Area:
% Good:
Storage Area:
No Conc. Floor:

Bsmnt Garage:

Carport Area: 720
Roof: Aluminum

Cost Est. for Res. Bldg: 1 Single Family PLAIN Cls CD Blt 0
(11) Heating System: Forced Air w/ Ducts
Ground Area = 1040 SF Floor Area = 1040 SF.
Phy/Ab.Phy/Func/Econ/Comb. % Good=46/100/100/100/46
Building Areas

Stories	Exterior	Foundation	Size	Cost New	Depr. Cost
1 Story	Pine Logs	Crawl Space	1,040		
			Total:	127,282	58,549
Other Additions/Adjustments					
Water/Sewer					
1000 Gal Septic			1	4,582	2,108
Water Well, 100 Feet			1	5,680	2,613
Porches					
WCP (1 Story)			460	13,496	6,208
WGEP (1 Story)			84	7,921	3,644
4in Concrete			36	266	122
Carports					
Aluminum			720	9,734	4,478
Local Cost Items					
OUTSIDE FURNACE			1	5,000	2,300
			Totals:	173,961	80,022

Notes:

ECF (RESIDENTIAL) 1.297 => TCV: 103,789

*** Information herein deemed reliable but not guaranteed***

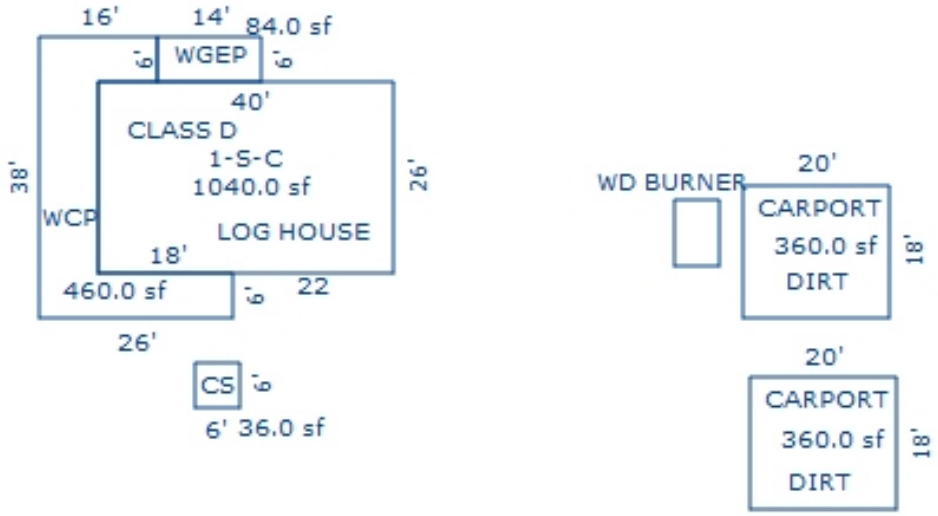

Sketch by Apex Sketch

*** Information herein deemed reliable but not guaranteed***

Parcel Number: 2410-33-3202 Jurisdiction: GREENWOOD TWP County: WEXFORD Printed on 02/15/2024

Grantor	Grantee	Sale Price	Sale Date	Inst. Type	Terms of Sale	Liber & Page	Verified By	Prcnt. Trans.
HINSON, GARY & SALINE	VERSICAL, ROBERT T	90,000	07/12/2003	WD	03-ARM'S LENGTH	500:507	DEED	0.0
MARR, JOHN H	HINSON, GARY & SALINE	72,500	08/29/2000	WD	03-ARM'S LENGTH	375:831	DEED	0.0

Property Address
6266 N 29 RD

Owner's Name/Address
VERSICAL, ROBERT T
6266 N 29 RD
MANTON MI 49663

Tax Description
S 1/2 OF S 1/2 OF NW 1/4 OF SW 1/4 SUB TO EASMT. --10 A M/L-- GW. SEC. 33 T24N R10W -MESICK-

Comments/Influences

Class: RESIDENTIAL-IMPROV Zoning:
School: MESICK CONSOLIDATED SCH DIST
P.R.E. 100% / /
:
2024 Est TCV 348,718 TCV/TFA: 126.26

Building Permit(s)	Date	Number	Status
Garage, Detached	08/07/2019	PB19-0172	COMPLETE
Res. Single Family	03/04/2009	PB09-0032	
RESIDENTIAL - NEW	11/28/2007	PB13779	
RESIDENTIAL - NEW	08/27/2007	PM9774	

X Improved | Vacant

Public Improvements

	Dirt Road
X	Gravel Road
X	Paved Road
	Storm Sewer
	Sidewalk
	Water
	Sewer
	Electric
	Gas
	Curb
	Street Lights
	Standard Utilities
	Underground Utils.

Topography of Site

	Level
X	Rolling
X	Low
	High
	Landscaped
X	Swamp
X	Wooded
	Pond
	Waterfront
	Ravine
	Wetland
	Flood Plain
X	OPEN/PINES

Who	When	What
GLA	05/11/2020	INSPECTION
GLA	07/10/2019	INSPECTION
GLA	07/10/2019	INSPECTION

Land Value Estimates for Land Table 4010.LAND VALUES

Description	Frontage	Depth	* Factors * Front	Depth	Rate	%Adj.	Reason	Value
	330.00	0.00	1.0000	1.0000	0	100		0
ACREAGE			9.750 Acres		4,664	100		45,470
ROW			0.250 Acres		0	100		0

330 Actual Front Feet, 10.00 Total Acres Total Est. Land Value = 45,470

Land Improvement Cost Estimates

Description	Rate	Size	% Good	Cash Value
D/W/P: 4in Concrete	7.01	385	60	1,619
Wood Frame	32.53	80	21	546
Total Estimated Land Improvements True Cash Value =				2,165

Year	Land Value	Building Value	Assessed Value	Board of Review	Tribunal/ Other	Taxable Value
2024	22,700	151,700	174,400			104,512C
2023	12,900	123,500	136,400			99,536C
2022	12,500	104,100	116,600			94,797C
2021	12,700	102,400	115,100			91,769C

The Equalizer. Copyright (c) 1999 - 2009.
Licensed To: Township of Greenwood, County of Wexford, Michigan

*** Information herein deemed reliable but not guaranteed***

Building Type

X	Single Family
	Mobile Home
	Town Home
	Duplex
	A-Frame
X	Wood Frame

Building Style: LOG

Yr Built	Remodeled
2007	0

Condition: Good

Room List

	Basement
	1st Floor
	2nd Floor
	Bedrooms

(1) Exterior

	Wood/Shingle
	Aluminum/Vinyl
	Brick
X	Pine/Cedar
X	Insulation

(2) Windows

	Many		Large
	Avg.	X	Avg.
	Few		Small

	Wood Sash
	Metal Sash
X	Vinyl Sash
	Double Hung
	Horiz. Slide
	Casement
	Double Glass
	Patio Doors
X	Storms & Screens

(3) Roof

X	Gable		Gambrel
	Hip		Mansard
	Flat		Shed

	Asphalt Shingle
X	Metal

Chimney:

(3) Roof (cont.)

	Eavestrough
X	Insulation
0	Front Overhang
0	Other Overhang

(4) Interior

X	Drywall		Plaster
	Paneled		Wood T&G

Trim & Decoration

	Ex	X	Ord		Min

Size of Closets

	Lg	X	Ord		Small

Doors:		Solid	X	H.C.	

(5) Floors

Kitchen:
Other: Linoleum
Other: Carpeted

(6) Ceilings

X	Drywall		

(7) Excavation

Basement: 1344 S.F.
Crawl: 0 S.F.
Slab: 0 S.F.
Height to Joists: 0.0

(8) Basement

	Conc. Block
	Poured Conc.
	Stone
	Treated Wood
	Concrete Floor

(9) Basement Finish

	Recreation SF
	Living SF
	Walkout Doors (B)
	No Floor SF
	Walkout Doors (A)

(10) Floor Support

Joists:
Unsupported Len:
Cntr.Sup:

(11) Heating/Cooling

X	Gas		Oil		Elec.
	Wood		Coal		Steam

	Forced Air w/o Ducts
X	Forced Air w/ Ducts
	Forced Hot Water
	Electric Baseboard
	Elec. Ceil. Radiant
	Radiant (in-floor)
	Electric Wall Heat
	Space Heater
	Wall/Floor Furnace
	Forced Heat & Cool
	Heat Pump
	No Heating/Cooling

	Central Air
	Wood Furnace

(12) Electric

150	Amps Service

No./Qual. of Fixtures

	Ex.	X	Ord.		Min

No. of Elec. Outlets

	Many	X	Ave.		Few

(13) Plumbing

	Average Fixture(s)
2	3 Fixture Bath
	2 Fixture Bath
	Softener, Auto
	Softener, Manual
	Solar Water Heat
	No Plumbing
	Extra Toilet
	Extra Sink
	Separate Shower
	Ceramic Tile Floor
	Ceramic Tile Wains
	Ceramic Tub Alcove
	Vent Fan

(14) Water/Sewer

	Public Water
	Public Sewer
1	Water Well
1	1000 Gal Septic
	2000 Gal Septic

Lump Sum Items:

(15) Built-ins

	Appliance Allow.
	Cook Top
	Dishwasher
	Garbage Disposal
	Bath Heater
	Vent Fan
	Hot Tub
	Unvented Hood
	Vented Hood
	Intercom
	Jacuzzi Tub
	Jacuzzi repl.Tub
	Oven
	Microwave
	Standard Range
	Self Clean Range
	Sauna
	Trash Compactor
	Central Vacuum
	Security System

(15) Fireplaces

	Interior 1 Story
	Interior 2 Story
	2nd/Same Stack
	Two Sided
	Exterior 1 Story
	Exterior 2 Story
	Prefab 1 Story
	Prefab 2 Story
	Heat Circulator
	Raised Hearth
	Wood Stove
	Direct-Vented Gas

Class: CD
Effec. Age: 16
Floor Area: 1,344
Total Base New : 227,661 E.C.F.
Total Depr Cost: 191,235 X 1.297
Estimated T.C.V: 248,031

(16) Porches/Decks

Area	Type
60	WCP (1 Story)
384	WCP (1 Story)
336	4in Concrete

(17) Garage

Year Built:
Car Capacity:
Class: CD
Exterior: Pole
Brick Ven.: 0
Stone Ven.: 0
Common Wall: Detache
Foundation: 18 Inch
Finished ?:
Auto. Doors: 0
Mech. Doors: 0
Area: 960
% Good: 0
Storage Area: 0
No Conc. Floor: 960

Bsmnt Garage:

Carport Area:
Roof:

Cost Est. for Res. Bldg: 1 Single Family LOG Cls CD Blt 2007
(11) Heating System: Forced Air w/ Ducts
Ground Area = 1344 SF Floor Area = 1344 SF.
Phy/Ab.Phy/Func/Econ/Comb. % Good=84/100/100/100/84
Building Areas

Stories	Exterior	Foundation	Size	Cost New	Depr. Cost
1 Story	Pine Logs	Wood Bsmnt.	1,344		
			Total:	179,352	150,655
Other Additions/Adjustments					
Plumbing					
3 Fixture Bath			1	3,887	3,265
Water/Sewer					
1000 Gal Septic			1	4,582	3,849
Water Well, 100 Feet			1	5,680	4,771
Porches					
WCP (1 Story)			60	3,197	2,685
WCP (1 Story)			384	11,290	9,484
4in Concrete			336	2,486	2,088
Garages					
Class: CD Exterior: Pole (Unfinished)					
Base Cost			960	21,907	18,402
No Concrete Floor			960	-5,904	-4,959
Local Cost Items					
POLE LEANTO DIRT			320	1,184	995
			Totals:	227,661	191,235

Notes:

ECF (RESIDENTIAL) 1.297 => TCV: 248,031

*** Information herein deemed reliable but not guaranteed***

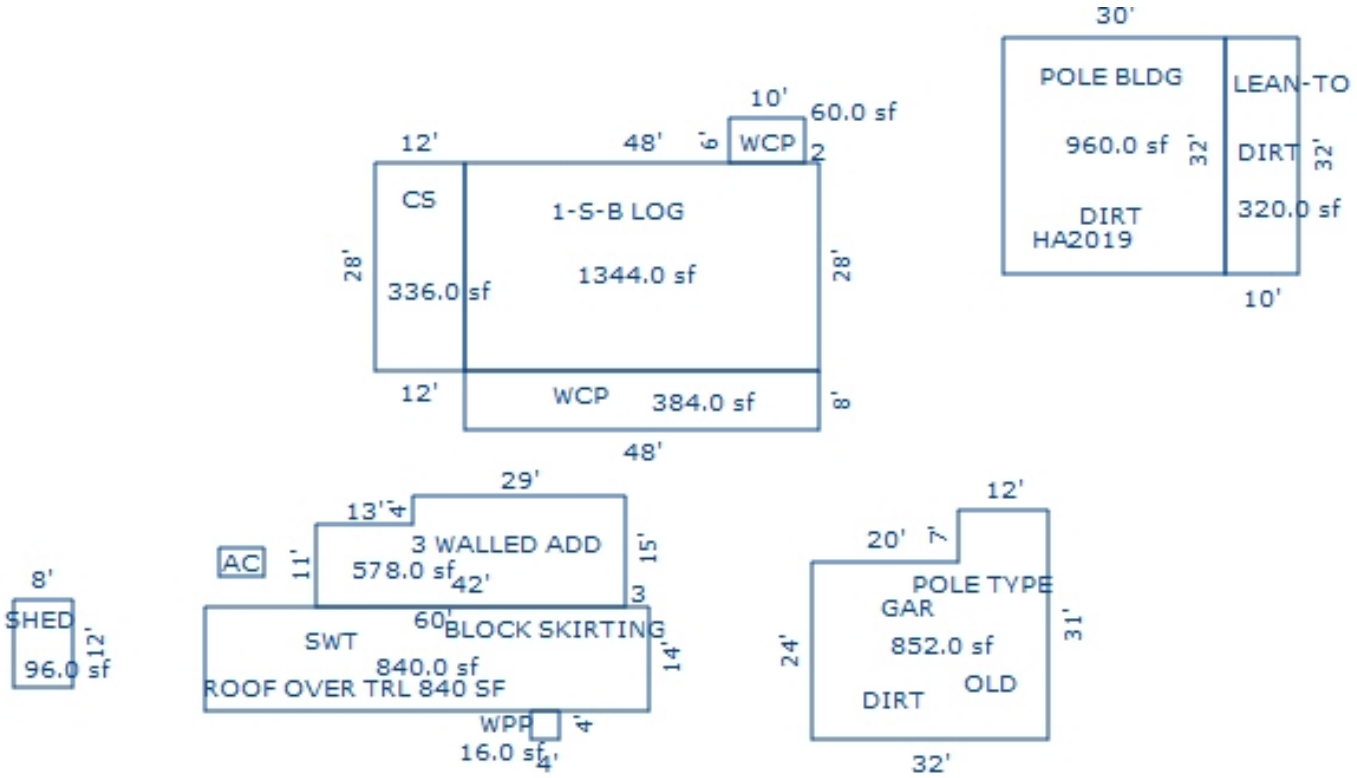

Sketch by Apex Sketch

*** Information herein deemed reliable but not guaranteed***

Building Type

	Single Family
X	Mobile Home
	Town Home
	Duplex
	A-Frame

X	Wood Frame

Building Style: SWT/DWT

Yr Built	Remodeled
0	0

Condition: Good

Room List

	Basement
	1st Floor
	2nd Floor
	Bedrooms

(1) Exterior

	Wood/Shingle
X	Aluminum/Vinyl
	Brick
X	Insulation

(2) Windows

	Many		Large
X	Avg.	X	Avg.
	Few		Small

	Wood Sash
	Metal Sash
X	Vinyl Sash
	Double Hung
	Horiz. Slide
	Casement
	Double Glass
	Patio Doors
X	Storms & Screens

(3) Roof

X	Gable		Gambrel
	Hip		Mansard
	Flat		Shed

X	Asphalt Shingle

Chimney:

(3) Roof (cont.)

	Eavestrough
X	Insulation
0	Front Overhang
0	Other Overhang

(4) Interior

X	Drywall		Plaster
	Paneled		Wood T&G

Trim & Decoration

	Ex	X	Ord		Min

Size of Closets

	Lg	X	Ord		Small

Doors:		Solid	X	H.C.	

(5) Floors

Kitchen:
Other: Linoleum
Other: Carpeted

(6) Ceilings

X	Drywall		

(7) Excavation

Basement: 0 S.F.
Crawl: 578 S.F.
Slab: 0 S.F.
Height to Joists: 0.0

(8) Basement

	Conc. Block
	Poured Conc.
	Stone
	Treated Wood
	Concrete Floor

(9) Basement Finish

	Recreation SF
	Living SF
	Walkout Doors (B)
	No Floor SF
	Walkout Doors (A)

(10) Floor Support

Joists:
Unsupported Len:
Cntr.Sup:

(11) Heating/Cooling

X	Gas		Oil		Elec.
	Wood		Coal		Steam

	Forced Warm Air
	Wall Furnace
X	Warm & Cool Air
	Heat Pump

	Central Air
	Wood Furnace

(12) Electric

150	Amps Service

No./Qual. of Fixtures

	Ex.	X	Ord.		Min

No. of Elec. Outlets

	Many	X	Ave.		Few

(13) Plumbing

	Average Fixture(s)
1	3 Fixture Bath
	2 Fixture Bath
	Softener, Auto
	Softener, Manual
	Solar Water Heat
	No Plumbing
	Extra Toilet
	Extra Sink
	Separate Shower
	Ceramic Tile Floor
	Ceramic Tile Wains
	Ceramic Tub Alcove
	Vent Fan

(14) Water/Sewer

	Public Water
	Public Sewer
1	Water Well
1	1000 Gal Septic
	2000 Gal Septic

Lump Sum Items:

(15) Built-ins

	Appliance Allow.
	Cook Top
	Dishwasher
	Garbage Disposal
	Bath Heater
	Vent Fan
	Hot Tub
	Unvented Hood
	Vented Hood
	Intercom
	Jacuzzi Tub
	Jacuzzi repl.Tub
	Oven
	Microwave
	Standard Range
	Self Clean Range
	Sauna
	Trash Compactor
	Central Vacuum
	Security System

(15) Fireplaces

	Interior 1 Story
	Interior 2 Story
	2nd/Same Stack
	Two Sided
	Exterior 1 Story
	Exterior 2 Story
	Prefab 1 Story
	Prefab 2 Story
	Heat Circulator
	Raised Hearth
	Wood Stove
	Direct-Vented Gas

Class: Fair
Effec. Age: 25
Floor Area:
Total Base New : 116,623 E.C.F.
Total Depr Cost: 40,904 X 1.297
Estimated T.C.V: 53,052

(16) Porches/Decks

Area	Type
16	WPP

(17) Garage

Year Built:
Car Capacity:
Class: D
Exterior: Pole
Brick Ven.: 0
Stone Ven.: 0
Common Wall: Detache
Foundation: 18 Inch
Finished ?:
Auto. Doors: 0
Mech. Doors: 0
Area: 852
% Good: 0
Storage Area: 0
No Conc. Floor: 852

Bsmnt Garage:

Carport Area:
Roof:

Cost Est. for Res. Bldg: 2 Mobile Home SWT/DWT Cls Fair Blt 0
(11) Heating System: Warm & Cool Air
Ground Area = 1418 SF Floor Area = 1418 SF.
Phy/Ab.Phy/Func/Econ/Comb. % Good=35/100/100/100/35
Building Areas

Type	Ext. Walls	Roof/Fnd.	Size	Cost New	Depr. Cost	
Main Home	Ribbed	Metal	840			
Addition	Siding	Crawl	578			
			Total:	84,806	29,684	
Other Additions/Adjustments						
Skirting, Metal or Vinyl, Vertical			106	1,182	414	
Water/Sewer						
1000 Gal Septic			1	4,582	1,604	
Water Well, 100 Feet			1	5,680	1,988	
Garages						
Class: D Exterior: Pole (Unfinished)						
Base Cost			852	17,517	6,131	
No Concrete Floor			852	-4,780	-1,673	
Porches						
WPP			16	805	282	
Local Cost Items						
SHED			96	749	345	*4
FREE STANDING ROOF			840	6,082	2,129	
			Totals:	116,623	40,904	

Notes:

ECF (RESIDENTIAL) 1.297 => TCV: 53,052

*** Information herein deemed reliable but not guaranteed***

Parcel Number: 2410-33-3203 Jurisdiction: GREENWOOD TWP County: WEXFORD Printed on 02/15/2024

Grantor	Grantee	Sale Price	Sale Date	Inst. Type	Terms of Sale	Liber & Page	Verified By	Prcnt. Trans.
ROZEWSKI, CHRISTOPHER J TR	MARINER, JEFFREY RYAN	78,500	10/29/2021	WD	03-ARM'S LENGTH	691/1279	DEED	100.0
ROZEWSKI, CHRISTOPHER SURV	ROZEWSKI, CHRISTOPHER J TR	0	10/05/2010	QC	21-NOT USED/OTHER	634/2479	DEED	0.0
MARR, JOHN H.	ROZEWSKI, CHRIS & DIANE	34,000	08/13/1999	WD	03-ARM'S LENGTH	369:243	DEED	0.0

Property Address

Owner's Name/Address

MARINER, JEFFREY RYAN
1831 RESTORATION DR SW
BYRON CENTER MI 49315

Tax Description

N 1/2 OF S 1/2 OF NW 1/4 OF SW 1/4 10 A M/L GW SEC 33 T24N R10W --MESICK-- [[ASSESSED W/ 33-3202 '99 EASEMENT OVER AND ACROSS THE WEST 33 FT OF THE SOUTH 1/2 OF THE S 1/2 THE NW 1/4 OF THE SW 1/4

Comments/Influences

Class: RESIDENTIAL-VACANT Zoning:

School: MESICK CONSOLIDATED SCH DIST

P.R.E. 0%

:

2024 Est TCV 49,786

Building Permit(s)	Date	Number	Status

	Improved	X	Vacant

	Public Improvements
X	Dirt Road
X	Gravel Road
	Paved Road
	Storm Sewer
	Sidewalk
	Water
	Sewer
	Electric
	Gas
	Curb
	Street Lights
	Standard Utilities
	Underground Utils.

	Topography of Site
	Level
X	Rolling
X	Low
	High
	Landscaped
X	Swamp
X	Wooded
	Pond
	Waterfront
	Ravine
	Wetland
	Flood Plain
X	OPEN/PINES

Who	When	What
GLA	10/31/2022	INSPECTION
GLA	05/11/2020	INSPECTION
GLA	07/10/2019	INSPECTION

Land Value Estimates for Land Table 4010.LAND VALUES

Description	Frontage	Depth	* Factors * Front	Depth	Rate	%Adj.	Reason	Value
ACREAGE			9.760	Acres	4,662	100		45,505
ROW			0.240	Acres	0	100		0
			10.00	Total Acres	Total Est. Land Value =			45,505

Land Improvement Cost Estimates

Description	Rate	Size	% Good	Cash Value
Wood Frame	24.63	220	79	4,281
Total Estimated Land Improvements True Cash Value =				4,281

Year	Land Value	Building Value	Assessed Value	Board of Review	Tribunal/ Other	Taxable Value
2024	22,800	2,100	24,900			13,119C
2023	12,900	2,000	14,900			12,495C
2022	11,900	0	11,900			11,900S
2021	12,000	0	12,000			9,712C

The Equalizer. Copyright (c) 1999 - 2009.
Licensed To: Township of Greenwood, County of Wexford, Michigan

*** Information herein deemed reliable but not guaranteed***

Parcel Number: 2410-33-3301 Jurisdiction: GREENWOOD TWP County: WEXFORD Printed on 02/15/2024

Grantor	Grantee	Sale Price	Sale Date	Inst. Type	Terms of Sale	Liber & Page	Verified By	Prcnt. Trans.
GROSS, TERRY W	GROSS, TERRY W &	1	09/05/2019	QC	21-NOT USED/OTHER		DEED	0.0
LA ROCHE, MARJORIE J.	GROSS, TERRY W.	12,000	07/21/1988	LC	03-ARM'S LENGTH	313:447	DEED	0.0

Property Address

6200 N 29 RD

Owner's Name/Address

GROSS, TERRY W &
MARKOWSKY, DEBRA
5235 BARBARA AVE
TRENTON MI 48183

Tax Description

S 1/2 OF SW 1/4 EXC N 440 FT & EXC W 990 FT OF S 220 FT; & EXC E 330 FT OF S 264 FT OF SW 1/4 OF SW 1/4 & E 1980 FT OF N 440 FT OF S 1/2 OF SW 1/4 --65.48 A M/L-- GW. SEC. 33 T24N R10W -MESICK-

Comments/Influences

Class: RESIDENTIAL-IMPROV Zoning:

School: MESICK CONSOLIDATED SCH DIST

P.R.E. 0%

:

2024 Est TCV 211,603 TCV/TFA: 0.00

Building Permit(s)	Date	Number	Status
Pole Barn	10/01/2008	PB08-0242	

X	Improved		Vacant

	Public Improvements
	Dirt Road
X	Gravel Road
	Paved Road
	Storm Sewer
	Sidewalk
	Water
	Sewer
X	Electric
	Gas
	Curb
	Street Lights
	Standard Utilities
	Underground Utils.

	Topography of Site
X	Level
	Rolling
X	Low
	High
	Landscaped
X	Swamp
X	Wooded
	Pond
	Waterfront
	Ravine
	Wetland
	Flood Plain
X	OPEN/PINES

Who	When	What
GLA	05/11/2020	INSPECTION
GLA	07/10/2019	INSPECTION
GLA	07/10/2019	INSPECTION

Land Value Estimates for Land Table 4010.LAND VALUES

Description	Frontage	Depth	* Factors * Front	Depth	Rate	%Adj.	Reason	Value
ACREAGE			63.990 Acres		2,616	80	SWAMPY	133,928
ROW			1.490 Acres		0	100		0
			65.48 Total Acres		Total Est. Land Value =			133,928

Year	Land Value	Building Value	Assessed Value	Board of Review	Tribunal/ Other	Taxable Value
2024	67,000	38,800	105,800			72,023C
2023	62,500	31,800	94,300			68,594C
2022	43,500	27,000	70,500			65,328C
2021	41,300	27,300	68,600			63,242C

The Equalizer. Copyright (c) 1999 - 2009.
Licensed To: Township of Greenwood, County of Wexford, Michigan

*** Information herein deemed reliable but not guaranteed***

Building Type

X	Single Family
	Mobile Home
	Town Home
	Duplex
	A-Frame
X	Wood Frame

Building Style: PLAIN

Yr Built	Remodeled
0	0

Condition: Good

Room List

	Basement
	1st Floor
	2nd Floor
	Bedrooms

(1) Exterior

X	Wood/Shingle
	Aluminum/Vinyl
	Brick
X	Insulation

(2) Windows

X	Many Avg. Few	X	Large Avg. Small

	Wood Sash
	Metal Sash
X	Vinyl Sash
	Double Hung
	Horiz. Slide
	Casement
	Double Glass
	Patio Doors
X	Storms & Screens

(3) Roof

X	Gable		Gambrel
	Hip		Mansard
	Flat		Shed

X	Asphalt Shingle

Chimney:

(3) Roof (cont.)

	Eavestrough
X	Insulation
0	Front Overhang
0	Other Overhang

(4) Interior

X	Drywall Paneled		Plaster Wood T&G

Trim & Decoration

	Ex	X	Ord		Min

Size of Closets

	Lg	X	Ord		Small

Doors: | | Solid | X | H.C.

(5) Floors

Kitchen:
Other: Linoleum
Other: Carpeted

(6) Ceilings

X	Drywall

(7) Excavation

Basement: 0 S.F.
Crawl: 0 S.F.
Slab: 0 S.F.
Height to Joists: 0.0

(8) Basement

	Conc. Block
	Poured Conc.
	Stone
	Treated Wood
	Concrete Floor

(9) Basement Finish

	Recreation SF
	Living SF
	Walkout Doors (B)
	No Floor SF
	Walkout Doors (A)

(10) Floor Support

Joists:
Unsupported Len:
Cntr.Sup:

(11) Heating/Cooling

X	Gas Wood		Oil Coal		Elec. Steam

	Forced Air w/o Ducts
X	Forced Air w/ Ducts
	Forced Hot Water
	Electric Baseboard
	Elec. Ceil. Radiant
	Radiant (in-floor)
	Electric Wall Heat
	Space Heater
	Wall/Floor Furnace
	Forced Heat & Cool
	Heat Pump
	No Heating/Cooling

	Central Air
	Wood Furnace

(12) Electric

150	Amps Service

No./Qual. of Fixtures

	Ex.	X	Ord.		Min

No. of Elec. Outlets

	Many	X	Ave.		Few

(13) Plumbing

	Average Fixture(s)
1	3 Fixture Bath
	2 Fixture Bath
	Softener, Auto
	Softener, Manual
	Solar Water Heat
	No Plumbing
	Extra Toilet
	Extra Sink
	Separate Shower
	Ceramic Tile Floor
	Ceramic Tile Wains
	Ceramic Tub Alcove
	Vent Fan

(14) Water/Sewer

	Public Water
	Public Sewer
1	Water Well
1	1000 Gal Septic
	2000 Gal Septic

Lump Sum Items:

(15) Built-ins

	Appliance Allow.
	Cook Top
	Dishwasher
	Garbage Disposal
	Bath Heater
	Vent Fan
	Hot Tub
	Unvented Hood
	Vented Hood
	Intercom
	Jacuzzi Tub
	Jacuzzi repl.Tub
	Oven
	Microwave
	Standard Range
	Self Clean Range
	Sauna
	Trash Compactor
	Central Vacuum
	Security System

(15) Fireplaces

	Interior 1 Story
	Interior 2 Story
	2nd/Same Stack
	Two Sided
	Exterior 1 Story
	Exterior 2 Story
	Prefab 1 Story
	Prefab 2 Story
	Heat Circulator
	Raised Hearth
	Wood Stove
	Direct-Vented Gas

Class: D
Effec. Age: 44
Floor Area: 0
Total Base New : 106,943 E.C.F.
Total Depr Cost: 59,888 X 1.297
Estimated T.C.V: 77,675

(16) Porches/Decks

Area	Type
24	WCP (1 Story)
468	CCP (1 Story)
498	4in Concrete

(17) Garage

Year Built:
Car Capacity:
Class: D
Exterior: Pole
Brick Ven.: 0
Stone Ven.: 0
Common Wall: Detache
Foundation: 18 Inch
Finished ?: Yes
Auto. Doors: 0
Mech. Doors: 0
Area: 1600
% Good: 0
Storage Area: 0
No Conc. Floor: 0

Bsmnt Garage:

Carport Area:
Roof:

Cost Est. for Res. Bldg: 1 Single Family PLAIN Cls D Blt 0
(11) Heating System: Forced Air w/ Ducts
Ground Area = 0 SF Floor Area = 0 SF.
Phy/Ab.Phy/Func/Econ/Comb. % Good=56/100/100/100/56

Building Areas Stories Exterior Foundation	Size	Cost New	Depr. Cost
Other Additions/Adjustments			
Water/Sewer			
1000 Gal Septic	1	4,293	2,404
Water Well, 100 Feet	1	5,545	3,105
Porches			
CCP (1 Story)	468	9,538	5,341
WCP (1 Story)	24	1,600	896
4in Concrete	498	3,317	1,858
Garages			
Class: D Exterior: Pole (Finished)			
Base Cost	1600	41,264	23,108
Class: D Exterior: Siding Foundation: 42 Inch (Unfinished)			
Base Cost	1440	41,386	23,176
	Totals:	106,943	59,888

Notes:
ECF (RESIDENTIAL) 1.297 => TCV: 77,675

*** Information herein deemed reliable but not guaranteed***

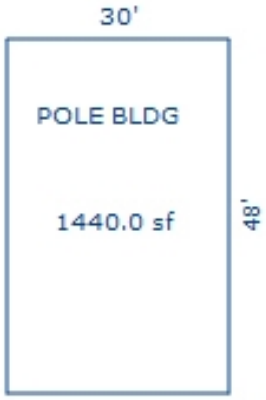

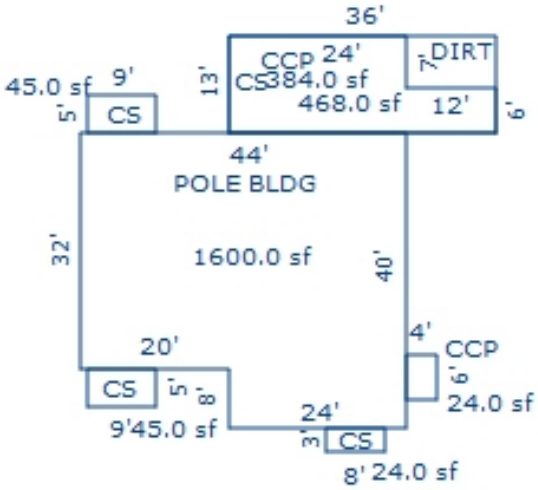

Sketch by Apex Sketch

*** Information herein deemed reliable but not guaranteed***

Parcel Number: 2410-33-3302 Jurisdiction: GREENWOOD TWP County: WEXFORD Printed on 02/15/2024

Grantor	Grantee	Sale Price	Sale Date	Inst. Type	Terms of Sale	Liber & Page	Verified By	Prcnt. Trans.

Property Address	Class: RESIDENTIAL-VACANT	Zoning:	Building Permit(s)	Date	Number	Status
	School: MESICK CONSOLIDATED SCH DIST					
Owner's Name/Address	P.R.E. 0%					
	:					
MARR, JOHN LE GROSS, TERRY W 5235 BARBARA AVE TRENTON MI 48183	2024 Est TCV 32,359					

Tax Description

N 440 FT OF S 1/2 OF SW 1/4 EXC E 1980 FT THEREOF 6.66 A. M/L GW. SEC. 33 T24N R10W -MESICK-

Comments/Influences

	Improved	X	Vacant

	Public Improvements
X	Dirt Road
X	Gravel Road
	Paved Road
	Storm Sewer
	Sidewalk
	Water
	Sewer
	Electric
	Gas
	Curb
	Street Lights
	Standard Utilities
	Underground Utils.

	Topography of Site
X	Level
	Rolling
	Low
	High
	Landscaped
	Swamp
X	Wooded
	Pond
	Waterfront
	Ravine
	Wetland
	Flood Plain
X	OPEN

Who	When	What
GLA	05/11/2020	INSPECTION
GLA	07/10/2019	INSPECTION
GLA	07/10/2019	INSPECTION

Land Value Estimates for Land Table 4010.LAND VALUES

Description	Frontage	Depth	* Factors * Front	Depth	Rate	%Adj.	Reason	Value
ACREAGE			6.330 Acres		5,112	100		32,359
ROW			0.330 Acres		0	100		0
			6.66 Total Acres		Total Est. Land Value =			32,359

Year	Land Value	Building Value	Assessed Value	Board of Review	Tribunal/ Other	Taxable Value
2024	16,200	0	16,200			1,134C
2023	11,500	0	11,500			1,080C
2022	9,500	0	9,500			1,029C
2021	10,800	0	10,800			997C

The Equalizer. Copyright (c) 1999 - 2009.
Licensed To: Township of Greenwood, County of Wexford, Michigan

*** Information herein deemed reliable but not guaranteed***

Parcel Number: 2410-33-3303 Jurisdiction: GREENWOOD TWP County: WEXFORD Printed on 02/15/2024

Grantor	Grantee	Sale Price	Sale Date	Inst. Type	Terms of Sale	Liber & Page	Verified By	Prcnt. Trans.
KLECKER, ROGER & LINDA	PRINGLE, KIMBERLY	75,000	03/02/2023	QC	03-ARM'S LENGTH	694/2392	DEED	100.0
KLECKER, DANIEL M & MICHEL	KLECKER, ROGER & LINDA	0	02/27/2023	QC	09-FAMILY	694/2391	DEED	0.0
KLECKER, DANIEL M & MICHEL		0	02/03/2023	QC	21-NOT USED/OTHER	694/2390	DEED	0.0
WEXFORD CO TREASURER	KLECKER, DANIEL M & MICHEI	6,000	10/11/2010	QC	21-NOT USED/OTHER	633/2465	DEED	100.0

Property Address

2141 E 14 RD

Owner's Name/Address

PRINGLE, KIMBERLY
3571 N SEELEY RD
MANTON MI 49663

Tax Description

COM 431 FT E OF SW COR OF SEC: N 220 FT; E 198 FT; S 220 FT; W 198 FT TO BEG. --1 A. M/L-- GW. SEC. 33 T24N R10W -MESICK-

Comments/Influences

The Equalizer. Copyright (c) 1999 - 2009.
Licensed To: Township of Greenwood, County of Wexford, Michigan

Class: RESIDENTIAL-IMPROV Zoning:

School: MESICK CONSOLIDATED SCH DIST

P.R.E. 0%

:

2024 Est TCV 66,090 TCV/TFA: 71.53

Building Permit(s)	Date	Number	Status
Res. Add/Alter/Repair	10/28/2010	PM10-11184	
Manufactured home	10/19/2010	PE10-18881	
Manufactured home	10/19/2010	PP10-5019	
Manufactured home	10/14/2010	PB10-0242	

X	Improved		Vacant

	Public Improvements
	Dirt Road
X	Gravel Road
	Paved Road
	Storm Sewer
	Sidewalk
	Water
	Sewer
X	Electric
	Gas
	Curb
	Street Lights
	Standard Utilities
	Underground Utils.

	Topography of Site
X	Level
	Rolling
	Low
	High
	Landscaped
	Swamp
X	Wooded
	Pond
	Waterfront
	Ravine
	Wetland
	Flood Plain
X	OPEN

Who	When	What
GLA	05/11/2020	INSPECTION
GLA	07/10/2019	INSPECTION
GLA	07/10/2019	INSPECTION

Land Value Estimates for Land Table 4010.LAND VALUES

Description	Frontage	Depth	* Factors * Front	Depth	Rate	%Adj.	Reason	Value
ACREAGE			0.850 Acres		10,953	100		9,310
ROW			0.150 Acres		0	100		0
			1.00 Total Acres		Total Est. Land Value =			9,310

Year	Land Value	Building Value	Assessed Value	Board of Review	Tribunal/ Other	Taxable Value
2024	4,700	28,300	33,000			33,000S
2023	2,600	22,800	25,400			17,140C
2022	2,100	19,000	21,100			16,324C
2021	2,600	16,200	18,800			15,803C

*** Information herein deemed reliable but not guaranteed***

Building Type

	Single Family
X	Mobile Home
	Town Home
	Duplex
	A-Frame

X	Wood Frame

Building Style: SWT/DWT

Yr Built	Remodeled
0	0

Condition: Good

Room List

	Basement
	1st Floor
	2nd Floor
	Bedrooms

(1) Exterior

	Wood/Shingle
	Aluminum/Vinyl
X	Brick
X	Insulation

(2) Windows

	Many		Large
X	Avg.	X	Avg.
	Few		Small

	Wood Sash
	Metal Sash
X	Vinyl Sash
	Double Hung
	Horiz. Slide
	Casement
	Double Glass
	Patio Doors
X	Storms & Screens

(3) Roof

X	Gable		Gambrel
	Hip		Mansard
	Flat		Shed

X	Asphalt Shingle

Chimney:

(3) Roof (cont.)

	Eavestrough
X	Insulation
0	Front Overhang
0	Other Overhang

(4) Interior

X	Drywall		Plaster
	Paneled		Wood T&G

Trim & Decoration

	Ex	X	Ord		Min

Size of Closets

	Lg	X	Ord		Small

Doors:		Solid	X	H.C.	

(5) Floors

Kitchen:
Other: Linoleum
Other: Carpeted

(6) Ceilings

X	Drywall		

(7) Excavation

Basement: 0 S.F.
Crawl: 0 S.F.
Slab: 0 S.F.
Height to Joists: 0.0

(8) Basement

	Conc. Block
	Poured Conc.
	Stone
	Treated Wood
	Concrete Floor

(9) Basement Finish

	Recreation SF
	Living SF
	Walkout Doors (B)
	No Floor SF
	Walkout Doors (A)

(10) Floor Support

Joists:
Unsupported Len:
Cntr.Sup:

(11) Heating/Cooling

X	Gas		Oil		Elec.
	Wood		Coal		Steam

X	Forced Warm Air
	Wall Furnace
	Warm & Cool Air
	Heat Pump
	Central Air
	Wood Furnace

(12) Electric

150	Amps Service

No./Qual. of Fixtures

	Ex.	X	Ord.		Min

No. of Elec. Outlets

	Many	X	Ave.		Few

(13) Plumbing

	Average Fixture(s)
1	3 Fixture Bath
	2 Fixture Bath
	Softener, Auto
	Softener, Manual
	Solar Water Heat
	No Plumbing
	Extra Toilet
	Extra Sink
	Separate Shower
	Ceramic Tile Floor
	Ceramic Tile Wains
	Ceramic Tub Alcove
	Vent Fan

(14) Water/Sewer

	Public Water
	Public Sewer
1	Water Well
1	1000 Gal Septic
	2000 Gal Septic

Lump Sum Items:

(15) Built-ins

	Appliance Allow.
	Cook Top
	Dishwasher
	Garbage Disposal
	Bath Heater
	Vent Fan
	Hot Tub
	Unvented Hood
	Vented Hood
	Intercom
	Jacuzzi Tub
	Jacuzzi repl.Tub
	Oven
	Microwave
	Standard Range
	Self Clean Range
	Sauna
	Trash Compactor
	Central Vacuum
	Security System

(15) Fireplaces

	Interior 1 Story
	Interior 2 Story
	2nd/Same Stack
	Two Sided
	Exterior 1 Story
	Exterior 2 Story
	Prefab 1 Story
	Prefab 2 Story
	Heat Circulator
	Raised Hearth
	Wood Stove
	Direct-Vented Gas

Class: Average
Effec. Age: 24
Floor Area:
Total Base New : 93,145 E.C.F.
Total Depr Cost: 43,778 X 1.297
Estimated T.C.V: 56,780

(16) Porches/Decks

Area	Type
64	WPP
64	WPP
242	4in Concrete

(17) Garage

Year Built:
Car Capacity:
Class: CD
Exterior: Pole
Brick Ven.: 0
Stone Ven.: 0
Common Wall: Detache
Foundation: 18 Inch
Finished ?:
Auto. Doors: 0
Mech. Doors: 0
Area: 832
% Good: 0
Storage Area: 0
No Conc. Floor: 0

Bsmnt Garage:

Carport Area:
Roof:

Cost Est. for Res. Bldg: 1 Mobile Home SWT/DWT Cls Average Blt 0
(11) Heating System: Wall Furnace
Ground Area = 924 SF Floor Area = 924 SF.
Phy/Ab.Phy/Func/Econ/Comb. % Good=47/100/100/100/47
Building Areas

Type	Ext. Walls	Roof/Fnd.	Size	Cost New	Depr. Cost
Main Home	Ribbed	Metal	924		
			Total:	54,156	25,453
Other Additions/Adjustments					
Skirting, Metal or Vinyl, Vertical			160	1,830	860
Water/Sewer					
1000 Gal Septic			1	4,899	2,303
Water Well, 100 Feet			1	5,849	2,749
Porches					
WPP			64	2,449	1,151
WPP			64	2,449	1,151
4in Concrete			242	1,994	937
Garages					
Class: CD Exterior: Pole (Unfinished)					
Base Cost			832	19,519	9,174
			Totals:	93,145	43,778

Notes:
ECF (RESIDENTIAL) 1.297 => TCV: 56,780

*** Information herein deemed reliable but not guaranteed***

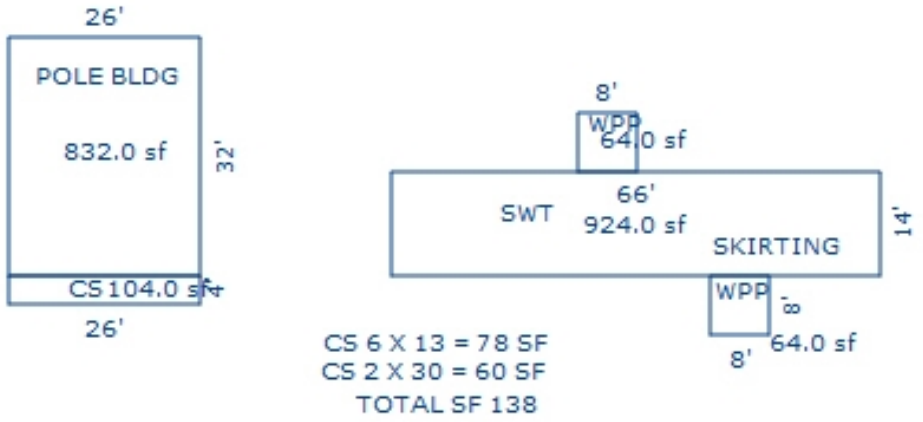

Sketch by Apex Sketch

*** Information herein deemed reliable but not guaranteed***

Parcel Number: 2410-33-3304 Jurisdiction: GREENWOOD TWP County: WEXFORD Printed on 02/15/2024

Grantor	Grantee	Sale Price	Sale Date	Inst. Type	Terms of Sale	Liber & Page	Verified By	Prcnt. Trans.
VEREECKEN, RICHARD & KIMBE		0	05/13/2018	QC	21-NOT USED/OTHER		DEED	0.0
VEREECKEN, RICHARD & KIMBE	VEREECKEN, RICHARD J &	0	05/13/2018	QC	09-FAMILY	682/2186	DEED	0.0
DEROSHA, DONNA C.	VEREECKEN, RICHARD & KIMBE	0	12/07/2011	QC	21-NOT USED/OTHER		DEED	100.0

Property Address

2093 E 14 RD

Owner's Name/Address

VEREECKEN, RICHARD J &
LISA SPAULDING
415 E CASS ST
CADILLAC MI 49601

Tax Description

THE W 431 FT OF TH S 220 FT OF SW 1/4
--2.16 A M/L-- GW. SEC. 33 T24N R10W
-MESICK-

Comments/Influences

DC FOR ARLO LAWRENCE DEROSHA 2/19/09 REC 8/24/11 641/1843

The Equalizer. Copyright (c) 1999 - 2009. Licensed To: Township of Greenwood, County of Wexford, Michigan

Class: RESIDENTIAL-IMPROV Zoning:

School: MESICK CONSOLIDATED SCH DIST

P.R.E. 0%

:

2024 Est TCV 47,431 TCV/TFA: 51.33

Building Permit(s)	Date	Number	Status
RESIDENTIAL - REMODEL	07/01/2002	PM6000	

X Improved | Vacant

Public Improvements

- X Dirt Road
- X Gravel Road
- Paved Road
- Storm Sewer
- Sidewalk
- Water
- Sewer
- Electric
- Gas
- Curb
- Street Lights
- Standard Utilities
- Underground Utils.

Topography of Site

- X Level
- Rolling
- Low
- High
- Landscaped
- Swamp
- Wooded
- Pond
- Waterfront
- Ravine
- Wetland
- Flood Plain
- X OPEN

Who	When	What
GLA	05/11/2020	INSPECTION
GLA	07/10/2019	INSPECTION
GLA	07/10/2019	INSPECTION

Land Value Estimates for Land Table 4010.LAND VALUES

Description	Frontage	Depth	* Factors * Front	Depth	Rate	%Adj.	Reason	Value
ACREAGE			1.670 Acres		8,752	100		14,615
ROW			0.490 Acres		0	100		0
			2.16 Total Acres		Total Est. Land Value =			14,615

Land Improvement Cost Estimates

Description	Rate	Size	% Good	Cash Value
D/W/P: 4in Concrete	6.11	21	45	58
Total Estimated Land Improvements True Cash Value =				58

Year	Land Value	Building Value	Assessed Value	Board of Review	Tribunal/ Other	Taxable Value
2024	7,300	16,400	23,700			13,279C
2023	4,800	13,300	18,100			12,647C
2022	4,000	11,000	15,000			12,045C
2021	4,600	9,400	14,000			11,661C

*** Information herein deemed reliable but not guaranteed***

Building Type

	Single Family
X	Mobile Home
	Town Home
	Duplex
	A-Frame

X	Wood Frame

Building Style: SWT/DWT

Yr Built	Remodeled
0	0

Condition: Good

Room List

	Basement
	1st Floor
	2nd Floor
	Bedrooms

(1) Exterior

	Wood/Shingle
X	Aluminum/Vinyl
	Brick
X	Insulation

(2) Windows

X	Many Avg. Few	X	Large Avg. Small

	Wood Sash
	Metal Sash
X	Vinyl Sash
	Double Hung
	Horiz. Slide
	Casement
	Double Glass
	Patio Doors
X	Storms & Screens

(3) Roof

X	Gable		Gambrel
	Hip		Mansard
	Flat		Shed

X	Asphalt Shingle

Chimney:

(3) Roof (cont.)

	Eavestrough
X	Insulation
0	Front Overhang
0	Other Overhang

(4) Interior

X	Drywall		Plaster
	Paneled		Wood T&G

Trim & Decoration

	Ex	X	Ord		Min

Size of Closets

	Lg	X	Ord		Small

Doors:		Solid	X	H.C.	

(5) Floors

Kitchen:
Other: Linoleum
Other: Carpeted

(6) Ceilings

X	Drywall		

(7) Excavation

Basement: 0 S.F.
Crawl: 0 S.F.
Slab: 0 S.F.
Height to Joists: 0.0

(8) Basement

	Conc. Block
	Poured Conc.
	Stone
	Treated Wood
	Concrete Floor

(9) Basement Finish

	Recreation SF
	Living SF
	Walkout Doors (B)
	No Floor SF
	Walkout Doors (A)

(10) Floor Support

Joists:
Unsupported Len:
Cntr.Sup:

(11) Heating/Cooling

X	Gas		Oil		Elec.
	Wood		Coal		Steam

X	Forced Warm Air
	Wall Furnace
	Warm & Cool Air
	Heat Pump

	Central Air
	Wood Furnace

(12) Electric

150	Amps Service

No./Qual. of Fixtures

	Ex.	X	Ord.		Min

No. of Elec. Outlets

	Many	X	Ave.		Few

(13) Plumbing

1	Average Fixture(s)
	3 Fixture Bath
	2 Fixture Bath
	Softener, Auto
	Softener, Manual
	Solar Water Heat
	No Plumbing
	Extra Toilet
	Extra Sink
	Separate Shower
	Ceramic Tile Floor
	Ceramic Tile Wains
	Ceramic Tub Alcove
	Vent Fan

(14) Water/Sewer

	Public Water
	Public Sewer
1	Water Well
1	1000 Gal Septic
	2000 Gal Septic

Lump Sum Items:

(15) Built-ins

	Appliance Allow.
	Cook Top
	Dishwasher
	Garbage Disposal
	Bath Heater
	Vent Fan
	Hot Tub
	Unvented Hood
	Vented Hood
	Intercom
	Jacuzzi Tub
	Jacuzzi repl.Tub
	Oven
	Microwave
	Standard Range
	Self Clean Range
	Sauna
	Trash Compactor
	Central Vacuum
	Security System

(15) Fireplaces

	Interior 1 Story
	Interior 2 Story
	2nd/Same Stack
	Two Sided
	Exterior 1 Story
	Exterior 2 Story
	Prefab 1 Story
	Prefab 2 Story
	Heat Circulator
	Raised Hearth
	Wood Stove
	Direct-Vented Gas

Class: Low
Effec. Age: 25
Floor Area:
Total Base New : 72,162 E.C.F.
Total Depr Cost: 25,257 X 1.297
Estimated T.C.V: 32,758

(16) Porches/Decks

Area	Type
120	WGEP (1 Story)
16	WPP
171	WGEP (1 Story)

(17) Garage

Year Built:
Car Capacity:
Class:
Exterior:
Brick Ven.:
Stone Ven.:
Common Wall:
Foundation:
Finished ?:
Auto. Doors:
Mech. Doors:
Area:
% Good:
Storage Area:
No Conc. Floor:

Bsmnt Garage:

Carport Area:
Roof:

Cost Est. for Res. Bldg: 1 Mobile Home SWT/DWT Cls Low Blt 0
(11) Heating System: Wall Furnace
Ground Area = 924 SF Floor Area = 924 SF.
Phy/Ab.Phy/Func/Econ/Comb. % Good=35/100/100/100/35
Building Areas

Type	Ext. Walls	Roof/Fnd.	Size	Cost New	Depr. Cost
Main Home	Ribbed	Metal	924		
			Total:	43,007	15,052
Other Additions/Adjustments					
Skirting, Metal or Vinyl, Vertical			160	1,738	608
Water/Sewer					
1000 Gal Septic			1	4,293	1,503
Water Well, 100 Feet			1	5,545	1,941
Porches					
WGEP (1 Story)			120	7,536	2,638
WGEP (1 Story)			171	9,285	3,250
WPP			16	758	265
			Totals:	72,162	25,257

Notes:
ECF (RESIDENTIAL) 1.297 => TCV: 32,758

*** Information herein deemed reliable but not guaranteed***

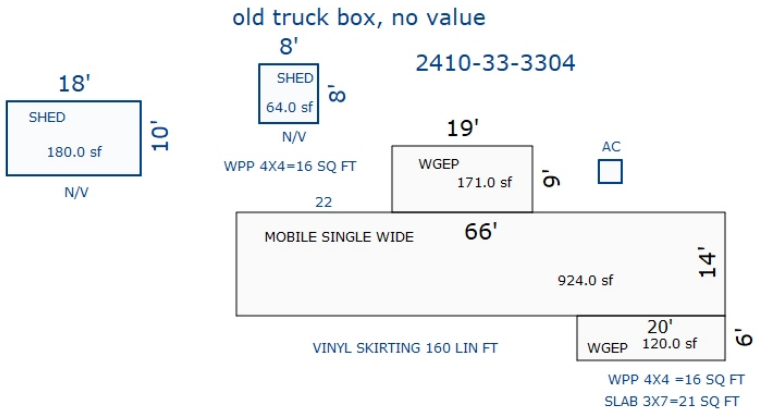

Sketch by Apex Sketch

*** Information herein deemed reliable but not guaranteed***

Parcel Number: 2410-33-3305 Jurisdiction: GREENWOOD TWP County: WEXFORD Printed on 02/15/2024

Grantor	Grantee	Sale Price	Sale Date	Inst. Type	Terms of Sale	Liber & Page	Verified By	Prcnt. Trans.
KELLOGG, JOHN W II	KEENEY, MICHAEL L JR & HEI	9,000	02/11/2022	QC	03-ARM'S LENGTH	692/532	DEED	100.0
ATWOOD, DEMETRIUS ANTHONY	KELLOGG, JOHN W II	9,000	01/27/2022	QC	03-ARM'S LENGTH	692/168	DEED	100.0
WEXFORD COUNTY TREASURER	ATWOOD, DEMETRIUS ANTHONY	6,100	08/17/2021	QC	13-GOVERNMENT		DEED	100.0
BAILEY, VIRGINIA	BAILEY, VIRGINIA TRUST	0	12/20/2006	QC	21-NOT USED/OTHER	599:1989	DEED	0.0

Property Address

Owner's Name/Address

KEENEY, MICHAEL L JR & HEIDI L
812 SHERMAN ST
BIG RAPIDS MI 49307

Tax Description

E 330 FT OF S 264 FT OF SW 1/4 OF SW 1/4 - 2 A. M/L GW. SEC. 33 T24N R10W -MESICK-

Comments/Influences

Class: RESIDENTIAL-VACANT Zoning:

School: MESICK CONSOLIDATED SCH DIST

P.R.E. 0%

:

2024 Est TCV 13,761

Building Permit(s)	Date	Number	Status

	Improved	X	Vacant

	Public Improvements
	Dirt Road
X	Gravel Road
	Paved Road
	Storm Sewer
	Sidewalk
	Water
	Sewer
X	Electric
	Gas
	Curb
	Street Lights
	Standard Utilities
	Underground Utils.

	Topography of Site
X	Level
	Rolling
	Low
	High
	Landscaped
	Swamp
	Wooded
	Pond
	Waterfront
	Ravine
	Wetland
	Flood Plain
X	OPEN

Who	When	What
GLA	10/31/2022	INSPECTION
GLA	05/11/2020	INSPECTION
GLA	07/10/2019	INSPECTION

Land Value Estimates for Land Table 4010.LAND VALUES

Description	Frontage	Depth	* Factors * Front	Depth	Rate	%Adj.	Reason	Value
ACREAGE			1.750 Acres		7,863	100		13,761
ROW			0.250 Acres		0	100		0
			2.00 Total Acres		Total Est. Land Value =			13,761

Year	Land Value	Building Value	Assessed Value	Board of Review	Tribunal/ Other	Taxable Value
2024	6,900	0	6,900			5,250C
2023	5,000	0	5,000			5,000S
2022	4,100	0	4,100			4,100S
2021	4,700	0	4,700			1,986C

The Equalizer. Copyright (c) 1999 - 2009.
Licensed To: Township of Greenwood, County of Wexford, Michigan

*** Information herein deemed reliable but not guaranteed***

Parcel Number: 2410-33-3306 Jurisdiction: GREENWOOD TWP County: WEXFORD Printed on 02/15/2024

Grantor	Grantee	Sale Price	Sale Date	Inst. Type	Terms of Sale	Liber & Page	Verified By	Prcnt. Trans.
SMITH, JUSTIN	MARKOWSKY MAURICE & DEBRA	180,000	08/23/2023	WD	03-ARM'S LENGTH	695/2794	PROPERTY TRANSFER	100.0
THIEBAUT, LORI A	SMITH, JUSTIN	127,500	04/30/2019	WD	03-ARM'S LENGTH	6842/792	DEED	100.0
GEARY, JOSEPH & WILMA K	THIEBAUT, LORI A	20,000	09/14/2018	QC	21-NOT USED/OTHER	683 /1408	DEED	100.0
RAIRIGH, JEFFREY A & LEONA	GEARY, JOSEPH & WILMA K	17,000	08/18/2017	QC	16-LC PAYOFF	681/26	DEED	0.0

Property Address

2175 E 14 RD

Owner's Name/Address

MARKOWSKY MAURICE & DEBRA
5235 BARBARA AVE
TRENTON MI 48183

Tax Description

PAR COM 330 FT W OF SE COR OF SW 1/4 OF SW 1/4: W 361 FT; N 220 FT; E 361 FT; S 220 FT TO POB 1.82 A. M/L GW. SEC. 33 T24N R10W -MESICK-

Comments/Influences

Class: RESIDENTIAL-IMPROV Zoning:

School: MESICK CONSOLIDATED SCH DIST

P.R.E. 0%

:

2024 Est TCV 178,969 TCV/TFA: 207.14

Building Permit(s)	Date	Number	Status
RESIDENTIAL - REMODEL	07/20/2001	PM5108	

X	Improved		Vacant

	Public Improvements
	Dirt Road
X	Gravel Road
	Paved Road
	Storm Sewer
	Sidewalk
	Water
	Sewer
X	Electric
	Gas
	Curb
	Street Lights
	Standard Utilities
	Underground Utils.

	Topography of Site
X	Level
X	Rolling
	Low
	High
	Landscaped
	Swamp
	Wooded
	Pond
	Waterfront
	Ravine
	Wetland
	Flood Plain
X	OPEN

Who	When	What
JB	10/23/2023	INSPECTION
GLA	05/11/2020	INSPECTION
GLA	07/10/2019	INSPECTION

The Equalizer. Copyright (c) 1999 - 2009.
Licensed To: Township of Greenwood, County of Wexford, Michigan

Land Value Estimates for Land Table 4010.LAND VALUES

Description	Frontage	Depth	* Factors * Front	Depth	Rate	%Adj.	Reason	Value
	361.00	220.00	1.0000	0.0000	0	100*		0
ACREAGE			1.550 Acres		10,256	100		15,896
ROW			0.270 Acres		0	100		0

* denotes lines that do not contribute to the total acreage calculation.

361 Actual Front Feet, 1.82 Total Acres Total Est. Land Value = 15,896

Land Improvement Cost Estimates

Description	Rate	Size	% Good	Cash Value
Wood Frame	20.22	400	46	3,720
Total Estimated Land Improvements True Cash Value =				3,720

Year	Land Value	Building Value	Assessed Value	Board of Review	Tribunal/ Other	Taxable Value
2024	7,900	81,600	89,500			89,500S
2023	4,600	66,900	71,500			46,631C
2022	3,800	56,700	60,500			44,411C
2021	4,500	57,400	61,900			42,993C

*** Information herein deemed reliable but not guaranteed***

Building Type

X	Single Family
	Mobile Home
	Town Home
	Duplex
	A-Frame
X	Wood Frame

Building Style: PLAIN

Yr Built	Remodeled
0	0

Condition: Good

Room List

	Basement
	1st Floor
	2nd Floor
	Bedrooms

(1) Exterior

X	Wood/Shingle
	Aluminum/Vinyl
	Brick
X	Insulation

(2) Windows

	Many		Large
X	Avg.	X	Avg.
	Few		Small

X	Wood Sash
	Metal Sash
X	Vinyl Sash
	Double Hung
	Horiz. Slide
	Casement
	Double Glass
	Patio Doors
X	Storms & Screens

(3) Roof

X	Gable		Gambrel
	Hip		Mansard
	Flat		Shed

X	Asphalt Shingle

Chimney:

(3) Roof (cont.)

	Eavestrough
X	Insulation
0	Front Overhang
0	Other Overhang

(4) Interior

X	Drywall		Plaster
	Paneled		Wood T&G

Trim & Decoration

	Ex	X	Ord		Min

Size of Closets

	Lg	X	Ord		Small

Doors:		Solid	X	H.C.	

(5) Floors

Kitchen:
Other: Linoleum
Other: Carpeted

(6) Ceilings

X	Drywall

(7) Excavation

Basement: 864 S.F.
Crawl: 0 S.F.
Slab: 0 S.F.
Height to Joists: 0.0

(8) Basement

	Conc. Block
	Poured Conc.
	Stone
	Treated Wood
	Concrete Floor

(9) Basement Finish

	Recreation	SF
744	Living	SF
1	Walkout Doors (B)	
	No Floor	SF
	Walkout Doors (A)	

(10) Floor Support

Joists:
Unsupported Len:
Cntr.Sup:

(11) Heating/Cooling

X	Gas		Oil		Elec.
	Wood		Coal		Steam

	Forced Air w/o Ducts
X	Forced Air w/ Ducts
	Forced Hot Water
	Electric Baseboard
	Elec. Ceil. Radiant
	Radiant (in-floor)
	Electric Wall Heat
	Space Heater
	Wall/Floor Furnace
	Forced Heat & Cool
	Heat Pump
	No Heating/Cooling

	Central Air
	Wood Furnace

(12) Electric

150	Amps Service

No./Qual. of Fixtures

	Ex.	X	Ord.		Min

No. of Elec. Outlets

	Many	X	Ave.		Few

(13) Plumbing

	Average Fixture(s)
1	3 Fixture Bath
	2 Fixture Bath
	Softener, Auto
	Softener, Manual
	Solar Water Heat
	No Plumbing
	Extra Toilet
	Extra Sink
	Separate Shower
	Ceramic Tile Floor
	Ceramic Tile Wains
	Ceramic Tub Alcove
	Vent Fan

(14) Water/Sewer

	Public Water
	Public Sewer
1	Water Well
1	1000 Gal Septic
	2000 Gal Septic

Lump Sum Items:

(15) Built-ins

	Appliance Allow.
	Cook Top
	Dishwasher
	Garbage Disposal
	Bath Heater
	Vent Fan
	Hot Tub
	Unvented Hood
	Vented Hood
	Intercom
	Jacuzzi Tub
	Jacuzzi repl.Tub
	Oven
	Microwave
	Standard Range
	Self Clean Range
	Sauna
	Trash Compactor
	Central Vacuum
	Security System

(15) Fireplaces

	Interior 1 Story
	Interior 2 Story
	2nd/Same Stack
	Two Sided
	Exterior 1 Story
	Exterior 2 Story
	Prefab 1 Story
	Prefab 2 Story
	Heat Circulator
	Raised Hearth
	Wood Stove
	Direct-Vented Gas

Class: CD
Effec. Age: 33
Floor Area: 864
Total Base New : 172,162 E.C.F.
Total Depr Cost: 122,863 X 1.297
Estimated T.C.V: 159,353

(16) Porches/Decks

Area	Type
140	WPP
64	WPP
96	WPP
102	Treated Wood

(17) Garage

Year Built:
Car Capacity:
Class:
Exterior:
Brick Ven.:
Stone Ven.:
Common Wall:
Foundation:
Finished ?:
Auto. Doors:
Mech. Doors:
Area:
% Good:
Storage Area:
No Conc. Floor:

Bsmnt Garage:

Carport Area:
Roof:

Cost Est. for Res. Bldg: 1 Single Family PLAIN Cls CD Blt 0
(11) Heating System: Forced Air w/ Ducts
Ground Area = 864 SF Floor Area = 864 SF.
Phy/Ab.Phy/Func/Econ/Comb. % Good=67/100/100/100/67
Building Areas

Stories	Exterior	Foundation	Size	Cost New	Depr. Cost
1 Story	Siding	Basement	864		
			Total:	120,452	80,703
Other Additions/Adjustments					
Basement Living Area			744	25,050	24,298
Basement, Outside Entrance, Below Grade			1	2,176	1,458
Water/Sewer					
1000 Gal Septic			1	4,582	3,070
Water Well, 100 Feet			1	5,680	3,806
Porches					
WPP			140	3,314	2,220
WPP			64	2,173	1,456
WPP			96	2,567	1,720
Deck					
Treated Wood			102	2,549	1,708
Local Cost Items					
SHED			400	3,120	2,090
SHED #2			64	499	334
			Totals:	172,162	122,863

Notes:

ECF (RESIDENTIAL) 1.297 => TCV: 159,353

*** Information herein deemed reliable but not guaranteed***

2410-33-3306

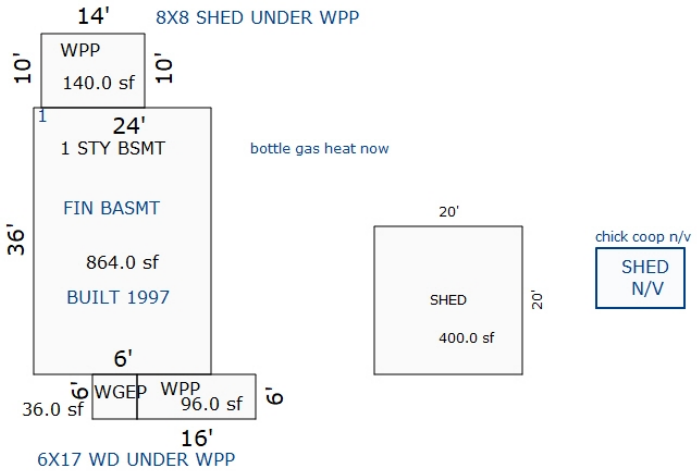

Sketch by Apex Sketch

*** Information herein deemed reliable but not guaranteed***

Parcel Number: 2410-33-4101 Jurisdiction: GREENWOOD TWP County: WEXFORD Printed on 02/15/2024

Grantor	Grantee	Sale Price	Sale Date	Inst. Type	Terms of Sale	Liber & Page	Verified By	Prcnt. Trans.
ANDERSON, KEVIN & PEGGY	LALONE, LEONARD L & DIANE	355,000	12/10/2020	WD	19-MULTI PARCEL ARM'S LEN	688/2387	AGENT	100.0
ANDERSON, KEVIN	ANDERSON, KEVIN & PEGGY	0	03/09/2017	QC	21-NOT USED/OTHER	6791/813	DEED	0.0
BURKE, DOUGLAS R & CHRISTI	ANDERSON, KEVIN	184,000	10/30/2015	WD	03-ARM'S LENGTH	676/934	DEED	100.0
PAUL, GAIL & KAREN PAUL	BURKE, DOUGLAS & CHRISTINA	196,000	11/27/2006	WD	03-ARM'S LENGTH	594:2886	DEED	0.0

Property Address

6257 N 31 RD

Owner's Name/Address

LALONE, LEONARD L & DIANE M
6257 N 31 RD
MANTON MI 49663

Tax Description

E 1/2 OF SE 1/4; EXC N 660 FT & EXC S 1110 FT THEREOF. - 26.37 A M/L GW. SEC. 33 T24N R10W -MESICK-

Comments/Influences

The Equalizer. Copyright (c) 1999 - 2009.
Licensed To: Township of Greenwood, County of Wexford, Michigan

Class: RESIDENTIAL-IMPROV Zoning:

School: MESICK CONSOLIDATED SCH DIST

P.R.E. 100% 05/24/2021

:

2024 Est TCV 435,132 TCV/TFA: 217.57

Building Permit(s)	Date	Number	Status
Garage, Detached	03/16/2022	PB22-0039	ENTERED
RESIDENTIAL - NEW	06/06/2000	PE12982	
RESIDENTIAL - REMODEL	10/04/1999	PP1512	
RESIDENTIAL - REMODEL	09/14/1999	PE12404	

X Improved | Vacant

Public Improvements

- Dirt Road
- X Gravel Road
- X Paved Road
- Storm Sewer
- Sidewalk
- Water
- Sewer
- X Electric
- Gas
- Curb
- Street Lights
- Standard Utilities
- Underground Utils.

Topography of Site

- Level
- X Rolling
- X Low
- High
- Landscaped
- X Swamp
- X Wooded
- X Pond
- Waterfront
- Ravine
- Wetland
- Flood Plain
- X OPEN/PINES

Who	When	What
JB	10/23/2023	INSPECTION
GLA	05/11/2020	INSPECTION
GLA	07/10/2019	INSPECTION

Land Value Estimates for Land Table 4010.LAND VALUES

Description	Frontage	Depth	* Factors * Front	Depth	Rate	%Adj.	Reason	Value
ACREAGE			25.529 Acres		2,722	100		69,490
ROW			0.841 Acres		0	100		0
			26.37 Total Acres		Total Est. Land Value =			69,490

Land Improvement Cost Estimates

Description	Rate	Size	% Good	Cash Value
Gazeboo(s): Standard	6,460.91	1	66	4,264
D/W/P: 3.5 Concrete	6.21	3940	51	12,478
D/W/P: 3.5 Concrete	6.21	5484	51	17,369
D/W/P: 4in Concrete	6.53	832	97	5,270
Fencing: Gates, Mesh, 3'	385.43	4	76	1,172
Fencing: Mesh, + for Rails	3.10	584	76	1,376
Fencing: Wire Mesh, #11	3.24	2920	76	7,190
Wood Frame	31.41	64	66	1,327
Total Estimated Land Improvements True Cash Value =				50,446

Year	Land Value	Building Value	Assessed Value	Board of Review	Tribunal/ Other	Taxable Value
2024	34,700	182,900	217,600			173,003C
2023	31,900	150,100	182,000			164,765C
2022	27,900	113,400	141,300			141,300S
2021	25,200	113,500	138,700			138,700S

*** Information herein deemed reliable but not guaranteed***

Building Type

X	Single Family
	Mobile Home
	Town Home
	Duplex
	A-Frame
X	Wood Frame

Building Style: PLAIN

Yr Built	Remodeled
1999	0

Condition: Good

Room List

	Basement
	1st Floor
	2nd Floor
	Bedrooms

(1) Exterior

	Wood/Shingle
	Aluminum/Vinyl
	Brick
X	Brick/Siding
	Insulation

(2) Windows

X	Many Avg. Few	X	Large Avg. Small

	Wood Sash
	Metal Sash
X	Vinyl Sash
X	Double Hung
X	Horiz. Slide
	Casement
	Double Glass
	Patio Doors
X	Storms & Screens

(3) Roof

X	Gable		Gambrel
	Hip		Mansard
	Flat		Shed

X	Asphalt Shingle

Chimney: Metal

(3) Roof (cont.)

	Eavestrough
	Insulation
0	Front Overhang
0	Other Overhang

(4) Interior

	Drywall Paneled		Plaster Wood T&G

Trim & Decoration

	Ex	X	Ord		Min

Size of Closets

	Lg	X	Ord		Small

Doors:		Solid	X	H.C.	

(5) Floors

Kitchen:
Other:
Other:

(6) Ceilings

(7) Excavation

Basement: 1936 S.F.
Crawl: 0 S.F.
Slab: 0 S.F.
Height to Joists: 0.0

(8) Basement

	Conc. Block
	Poured Conc.
	Stone
	Treated Wood
	Concrete Floor

(9) Basement Finish

	Recreation	SF
	Living	SF
1	Walkout Doors (B)	
	No Floor	SF
	Walkout Doors (A)	

(10) Floor Support

Joists:
Unsupported Len:
Cntr.Sup:

(11) Heating/Cooling

X	Gas		Oil		Elec.		
	Wood		Coal		Steam		

	Forced Air w/o Ducts
	Forced Air w/ Ducts
	Forced Hot Water
	Electric Baseboard
	Elec. Ceil. Radiant
	Radiant (in-floor)
	Electric Wall Heat
	Space Heater
	Wall/Floor Furnace
X	Forced Heat & Cool
	Heat Pump
	No Heating/Cooling
	Central Air
	Wood Furnace

(12) Electric

0	Amps Service

No./Qual. of Fixtures

	Ex.	X	Ord.		Min

No. of Elec. Outlets

	Many	X	Ave.		Few

(13) Plumbing

2	Average Fixture(s)
	3 Fixture Bath
	2 Fixture Bath
	Softener, Auto
	Softener, Manual
	Solar Water Heat
	No Plumbing
	Extra Toilet
	Extra Sink
	Separate Shower
	Ceramic Tile Floor
	Ceramic Tile Wains
	Ceramic Tub Alcove
	Vent Fan

(14) Water/Sewer

	Public Water
	Public Sewer
1	Water Well
1	1000 Gal Septic
	2000 Gal Septic

Lump Sum Items:

(15) Built-ins

	Appliance Allow.
	Cook Top
	Dishwasher
	Garbage Disposal
	Bath Heater
	Vent Fan
	Hot Tub
	Unvented Hood
	Vented Hood
	Intercom
	Jacuzzi Tub
	Jacuzzi repl.Tub
	Oven
	Microwave
	Standard Range
	Self Clean Range
	Sauna
	Trash Compactor
	Central Vacuum
	Security System

(15) Fireplaces

	Interior 1 Story
	Interior 2 Story
	2nd/Same Stack
	Two Sided
	Exterior 1 Story
	Exterior 2 Story
	Prefab 1 Story
	Prefab 2 Story
	Heat Circulator
	Raised Hearth
	Wood Stove
	Direct-Vented Gas

Class: CD
Effec. Age: 25
Floor Area: 2,000
Total Base New : 324,026 E.C.F.
Total Depr Cost: 243,019 X 1.297
Estimated T.C.V: 315,196

(16) Porches/Decks

Area	Type
96	CPP

(17) Garage

Year Built:
Car Capacity:
Class:
Exterior:
Brick Ven.:
Stone Ven.:
Common Wall:
Foundation:
Finished ?:
Auto. Doors:
Mech. Doors:
Area:
% Good:
Storage Area:
No Conc. Floor:

Bsmnt Garage:

Carport Area:
Roof:

Cost Est. for Res. Bldg: 1 Single Family PLAIN Cls CD Blt 1999
(11) Heating System: Forced Heat & Cool
Ground Area = 1936 SF Floor Area = 2000 SF.
Phy/Ab.Phy/Func/Econ/Comb. % Good=75/100/100/100/75
Building Areas

Stories	Exterior	Foundation	Size	Cost New	Depr. Cost
1 Story	Siding	Basement	1,936		
1 Story	Siding	Overhang	64		
		Total:		248,493	186,370
Other Additions/Adjustments					
Basement, Outside Entrance, Below Grade			1	2,176	1,632
Plumbing					
3 Fixture Bath			1	3,887	2,915
Water/Sewer					
1000 Gal Septic			1	4,582	3,436
Water Well, 100 Feet			1	5,680	4,260
Porches					
CPP			96	1,788	1,341
Garages					
Class: CD Exterior: Pole (Unfinished)					
Base Cost			1440	31,320	23,490
Class: CD Exterior: Pole (Unfinished)					
Base Cost			1200	26,100	19,575
		Totals:		324,026	243,019

Notes:

ECF (RESIDENTIAL) 1.297 => TCV: 315,196

*** Information herein deemed reliable but not guaranteed***

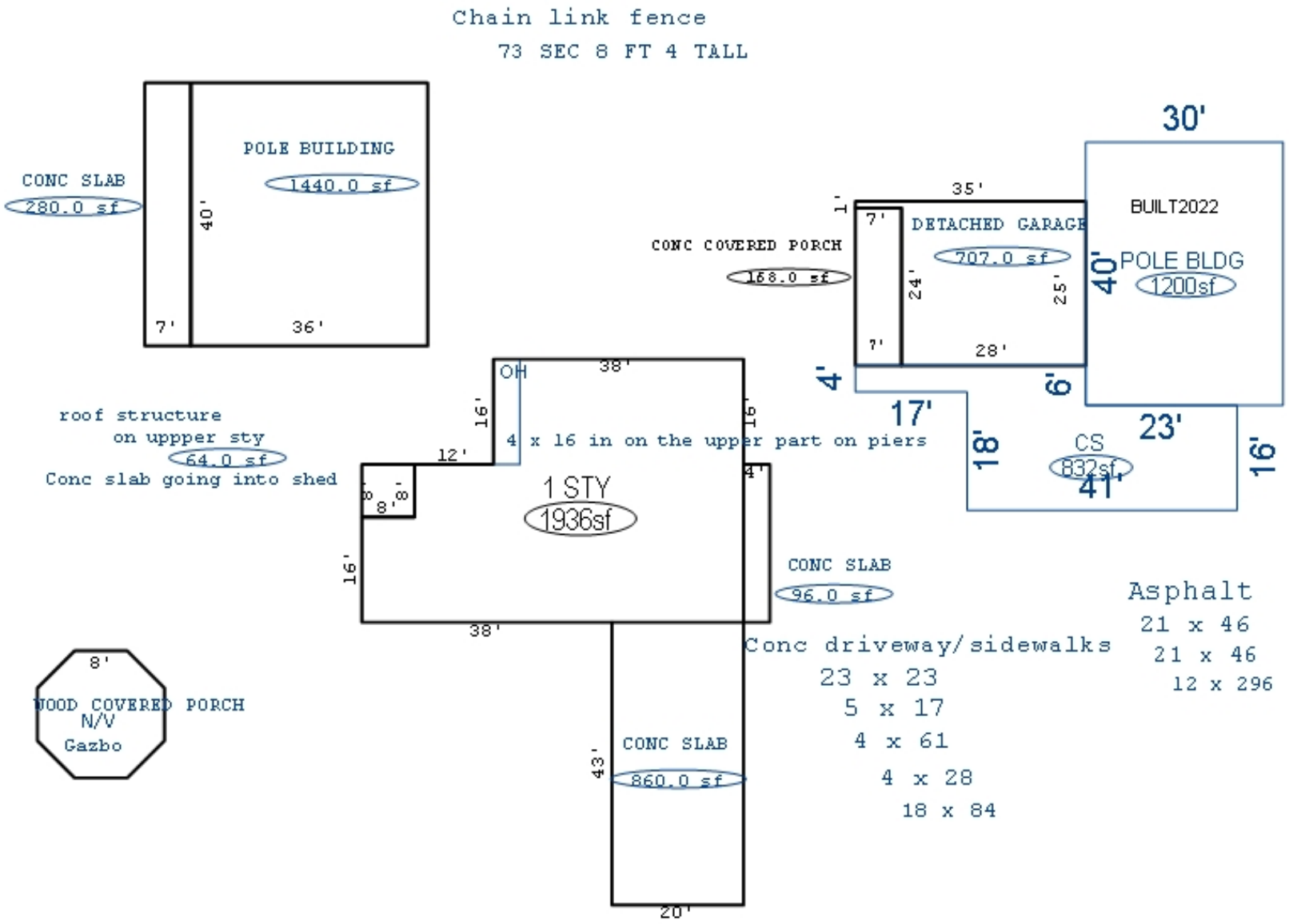

*** Information herein deemed reliable but not guaranteed***

Parcel Number: 2410-33-4102 Jurisdiction: GREENWOOD TWP County: WEXFORD Printed on 02/15/2024

Grantor	Grantee	Sale Price	Sale Date	Inst. Type	Terms of Sale	Liber & Page	Verified By	Prcnt. Trans.
CARPENTER, WAYNE A III	HARRINGAN, BENJAMIN &	155,000	02/10/2023	WD	03-ARM'S LENGTH	694/2343	DEED	100.0
CHASE HOME FINANCE LLC	HOMESALES INC	0	10/24/2011	QC	17-LENDING TO LENDING	642/2993	DEED	0.0
HOMESALES INC	CARPENTER, WAYNE A III	34,640	10/24/2011	WD	11-FROM LENDING INSTITUTI	642/2995	DEED	100.0
PILOT, NANCY	CHASE HOME FINANCE LLC	55,250	10/01/2010	SD	10-FORECLOSURE	633/2624	DEED	0.0

Property Address

6393 N 31 RD

Owner's Name/Address

HARRINGAN, BENJAMIN &
ELIZABETH STEED
6393 N 31 RD
MANTON MI 49663

Tax Description

COM AT E 1/4 COR OF SEC; S 476.12 FT TO POB: S84D17M15S W 383.09 FT; S 147.13 FT; E 385 FT M/L; N TO BEG. --1.3 A M/L- GW SEC 33 T24N R10W -MESICK- [[ASSESSED W/33-4101 '98

Comments/Influences

The Equalizer. Copyright (c) 1999 - 2009. Licensed To: Township of Greenwood, County of Wexford, Michigan

Class: RESIDENTIAL-IMPROV Zoning:

School: MESICK CONSOLIDATED SCH DIST

P.R.E. 100% 02/16/2023

:

2024 Est TCV 102,301 TCV/TFA: 92.66

Building Permit(s)	Date	Number	Status
RESIDENTIAL - NEW	04/15/2004	PM7509	
RESIDENTIAL - NEW	10/17/2003	PM7121	
RESIDENTIAL - NEW	10/03/2003	PE15691	
RESIDENTIAL - NEW	05/07/2003	PP2989	

X	Improved		Vacant

	Public Improvements
	Dirt Road
X	Gravel Road
X	Paved Road
	Storm Sewer
	Sidewalk
	Water
	Sewer
	Electric
	Gas
	Curb
	Street Lights
	Standard Utilities
	Underground Utils.

	Topography of Site
	Level
X	Rolling
X	Low
	High
	Landscaped
X	Swamp
X	Wooded
	Pond
	Waterfront
	Ravine
	Wetland
	Flood Plain
X	OPEN/PINES

Who	When	What
JB	10/23/2023	INSPECTION
GLA	05/11/2020	INSPECTION
GLA	07/10/2019	INSPECTION

Land Value Estimates for Land Table 4010.LAND VALUES

Description	Frontage	Depth	* Factors * Front	Depth	Rate	%Adj.	Reason	Value
	147.13	383.09	1.0000	0.0000	0	100*		0
ACREAGE			1.189 Acres		10,953	100		13,023
ROW			0.111 Acres		0	100		0

* denotes lines that do not contribute to the total acreage calculation.

147 Actual Front Feet, 1.30 Total Acres Total Est. Land Value = 13,023

Land Improvement Cost Estimates

Description	Rate	Size	% Good	Cash Value
Fencing: Wd, Solid, 6 ft.	31.10	270	79	6,634
Total Estimated Land Improvements True Cash Value =				6,634

Year	Land Value	Building Value	Assessed Value	Board of Review	Tribunal/ Other	Taxable Value
2024	6,500	44,700	51,200			51,200S
2023	3,600	34,400	38,000			32,883C
2022	3,000	30,000	33,000			31,318C
2021	3,600	27,300	30,900			30,318C

*** Information herein deemed reliable but not guaranteed***

Building Type

	Single Family
X	Mobile Home
	Town Home
	Duplex
	A-Frame

X	Wood Frame

Building Style: SWT/DWT

Yr Built	Remodeled
0	0

Condition: Fair

Room List

	Basement
	1st Floor
	2nd Floor
	Bedrooms

(1) Exterior

	Wood/Shingle
	Aluminum/Vinyl
	Brick
X	Vinyl
	Insulation

(2) Windows

X	Many		Large
	Avg.	X	Avg.
	Few		Small

	Wood Sash
	Metal Sash
X	Vinyl Sash
X	Double Hung
	Horiz. Slide
	Casement
	Double Glass
	Patio Doors
X	Storms & Screens

(3) Roof

X	Gable		Gambrel
	Hip		Mansard
	Flat		Shed

X	Asphalt Shingle

Chimney:

(3) Roof (cont.)

	Eavestrough
	Insulation
0	Front Overhang
0	Other Overhang

(4) Interior

	Drywall		Plaster
	Paneled		Wood T&G

Trim & Decoration

	Ex		Ord		Min

Size of Closets

	Lg		Ord		Small

Doors:		Solid		H.C.	

(5) Floors

Kitchen:
Other:
Other:

(6) Ceilings

(7) Excavation

Basement: 0 S.F.
Crawl: 0 S.F.
Slab: 0 S.F.
Height to Joists: 0.0

(8) Basement

	Conc. Block
	Poured Conc.
	Stone
	Treated Wood
	Concrete Floor

(9) Basement Finish

	Recreation	SF
	Living	SF
	Walkout Doors (B)	
	No Floor	SF
	Walkout Doors (A)	

(10) Floor Support

Joists:
Unsupported Len:
Cntr.Sup:

(11) Heating/Cooling

X	Gas		Oil		Elec.
	Wood		Coal		Steam

	Forced Warm Air
	Wall Furnace
X	Warm & Cool Air
	Heat Pump

X	Central Air
	Wood Furnace

(12) Electric

0	Amps Service

No./Qual. of Fixtures

	Ex.		Ord.		Min

No. of Elec. Outlets

	Many		Ave.		Few

(13) Plumbing

	Average Fixture(s)
2	3 Fixture Bath
	2 Fixture Bath
	Softener, Auto
	Softener, Manual
	Solar Water Heat
	No Plumbing
	Extra Toilet
	Extra Sink
	Separate Shower
	Ceramic Tile Floor
	Ceramic Tile Wains
	Ceramic Tub Alcove
	Vent Fan

(14) Water/Sewer

	Public Water
	Public Sewer
1	Water Well
1	1000 Gal Septic
	2000 Gal Septic

Lump Sum Items:

(15) Built-ins

	Appliance Allow.
	Cook Top
	Dishwasher
	Garbage Disposal
	Bath Heater
	Vent Fan
	Hot Tub
	Unvented Hood
	Vented Hood
	Intercom
	Jacuzzi Tub
	Jacuzzi repl.Tub
	Oven
	Microwave
	Standard Range
	Self Clean Range
	Sauna
	Trash Compactor
	Central Vacuum
	Security System

(15) Fireplaces

	Interior 1 Story
	Interior 2 Story
	2nd/Same Stack
	Two Sided
	Exterior 1 Story
	Exterior 2 Story
	Prefab 1 Story
	Prefab 2 Story
	Heat Circulator
	Raised Hearth
	Wood Stove
	Direct-Vented Gas

Class: Average
Effec. Age: 21
Floor Area:
Total Base New : 121,139 E.C.F.
Total Depr Cost: 63,719 X 1.297
Estimated T.C.V: 82,644

(16) Porches/Decks

Area	Type
120	CGEP (1 Story)
64	WCP (1 Story)
15	4in Concrete
72	WCP (1 Story)

(17) Garage

Year Built:
Car Capacity:
Class:
Exterior:
Brick Ven.:
Stone Ven.:
Common Wall:
Foundation:
Finished ?:
Auto. Doors:
Mech. Doors:
Area:
% Good:
Storage Area:
No Conc. Floor:

Bsmnt Garage:

Carport Area:
Roof:

Cost Est. for Res. Bldg: 1 Mobile Home SWT/DWT Cls Average Blt 0
(11) Heating System: Warm & Cool Air, Air Conditioning
Ground Area = 1104 SF Floor Area = 1104 SF.
Phy/Ab.Phy/Func/Econ/Comb. % Good=53/100/100/100/53
Building Areas

Type	Ext. Walls	Roof/Fnd.	Size	Cost New	Depr. Cost	
Main Home	Siding	Comp.Shingle	1104			
			Total:	86,529	45,861	
Other Additions/Adjustments						
Skirting, Concrete Block			142	2,910	1,542	
Plumbing						
3 Fixture Bath			1	3,075	1,630	
Water/Sewer						
1000 Gal Septic			1	4,899	2,596	
Water Well, 100 Feet			1	5,849	3,100	
Porches						
CGEP (1 Story)			120	6,047	3,205	
WCP (1 Story)			64	3,396	1,358	*4
WCP (1 Story)			72	3,661	1,940	
4in Concrete			15	124	66	
Local Cost Items						
SHED			356	2,777	1,111	*4
SHED #2			240	1,872	1,310	*7
			Totals:	121,139	63,719	

Notes:

ECF (RESIDENTIAL) 1.297 => TCV: 82,644

*** Information herein deemed reliable but not guaranteed***

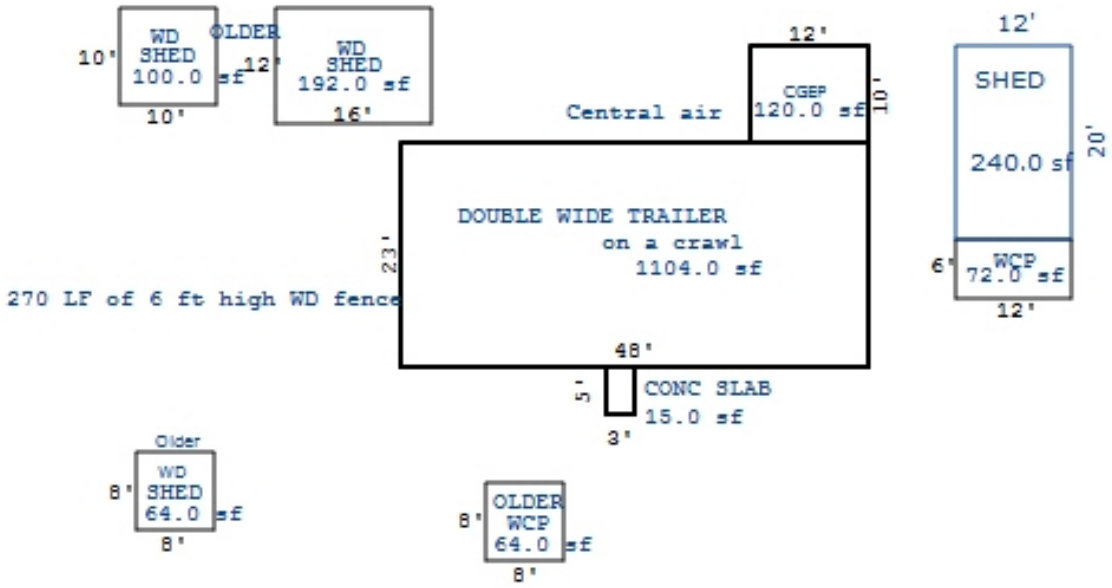

Sketch by Apex Sketch

*** Information herein deemed reliable but not guaranteed***

Parcel Number: 2410-33-4103-01 Jurisdiction: GREENWOOD TWP County: WEXFORD Printed on 02/15/2024

Grantor	Grantee	Sale Price	Sale Date	Inst. Type	Terms of Sale	Liber & Page	Verified By	Prcnt. Trans.
WALLGREN, CHARLES	WALLGREN FAMILY COTTAGE LI	1	05/04/2021	QC	21-NOT USED/OTHER	690-2962	DEED	0.0

Property Address

6445 N 31 RD

Owner's Name/Address

WALLGREN FAMILY COTTAGE LLC
600 TOLL ST
MONROE MI 48162

Tax Description

BEG AT E 1/4 COR OF SEC: S 476.12 FT; S84D17M15S W 383.09 FT; S 147.13 FT; W 910.85 FT; N 660 FT; E 1295.88 FT TO POB. & S 400 FT OF NE 1/4 EXC E 1090 FT THEREOF.--32.94 A M/L-- GW SEC 33 T24N R10W -MESICK- [[ASSESSED W/ 33-4102 '03 SPLIT ON 08/27/2007 FROM 2410-33-4103; 2410-33-1301

Comments/Influences

SPLIT/COMB. ON 08/27/2007 COMPLETED 12/01/2008 DEB OWNER REQUEST ; PARENT PARCEL(S): 2410-33-4103;

The Equalizer. Copyright (c) 1999 - 2009. Licensed To: Township of Greenwood, County of Wexford, Michigan

Class: RESIDENTIAL-IMPROV Zoning:

School: MESICK CONSOLIDATED SCH DIST

P.R.E. 0%

:

2024 Est TCV 321,340 TCV/TFA: 286.91

Building Permit(s)	Date	Number	Status
Pole Barn	11/30/2009	PB09-0274	
RESIDENTIAL - NEW	10/17/2007	PM9865	
RESIDENTIAL - NEW	10/08/2007	PM9842	
RESIDENTIAL - NEW	08/15/2007	PE18021	

X Improved | Vacant

	Public Improvements
	Dirt Road
	Gravel Road
X	Paved Road
	Storm Sewer
	Sidewalk
	Water
	Sewer
X	Electric
	Gas
	Curb
	Street Lights
	Standard Utilities
	Underground Utils.

	Topography of Site
	Level
X	Rolling
X	Low
	High
	Landscaped
	Swamp
X	Wooded
	Pond
	Waterfront
	Ravine
	Wetland
	Flood Plain
X	OPEN/PINES

Who	When	What
GLA	05/11/2020	INSPECTION
GLA	07/10/2019	INSPECTION
GLA	07/10/2019	INSPECTION

Land Value Estimates for Land Table 4010.LAND VALUES

Description	Frontage	Depth	* Factors * Front	Depth	Rate	%Adj.	Reason	Value
ACREAGE			32.580 Acres		2,722	100		88,683
ROW			0.360 Acres		0	100		0
			32.94 Total Acres		Total Est. Land Value =			88,683

Year	Land Value	Building Value	Assessed Value	Board of Review	Tribunal/ Other	Taxable Value
2024	44,300	116,400	160,700			85,206C
2023	40,200	94,800	135,000			81,149C
2022	33,200	79,900	113,100			77,285C
2021	28,800	80,800	109,600			74,817C

*** Information herein deemed reliable but not guaranteed***

Building Type

X	Single Family
	Mobile Home
	Town Home
	Duplex
	A-Frame
X	Wood Frame

Building Style: PLAIN

Yr Built	Remodeled
2007	0

Condition: Good

Room List

	Basement
	1st Floor
	2nd Floor
	Bedrooms

(1) Exterior

	Wood/Shingle
X	Aluminum/Vinyl
	Brick
X	Insulation

(2) Windows

X	Many		Large
	Avg.	X	Avg.
	Few		Small

	Wood Sash
	Metal Sash
X	Vinyl Sash
	Double Hung
	Horiz. Slide
	Casement
	Double Glass
	Patio Doors
X	Storms & Screens

(3) Roof

X	Gable		Gambrel
	Hip		Mansard
	Flat		Shed

X	Asphalt Shingle

Chimney:

(3) Roof (cont.)

	Eavestrough
X	Insulation
0	Front Overhang
0	Other Overhang

(4) Interior

X	Drywall		Plaster
	Paneled		Wood T&G

Trim & Decoration

	Ex	X	Ord		Min

Size of Closets

	Lg	X	Ord		Small

Doors:		Solid	X	H.C.	

(5) Floors

Kitchen:
Other: Linoleum
Other: Carpeted

(6) Ceilings

X	Drywall

(7) Excavation

Basement: 896 S.F.
Crawl: 0 S.F.
Slab: 0 S.F.
Height to Joists: 0.0

(8) Basement

	Conc. Block
	Poured Conc.
	Stone
	Treated Wood
	Concrete Floor

(9) Basement Finish

	Recreation SF
	Living SF
	Walkout Doors (B)
	No Floor SF
	Walkout Doors (A)

(10) Floor Support

Joists:
Unsupported Len:
Cntr.Sup:

(11) Heating/Cooling

X	Gas		Oil		Elec.
	Wood		Coal		Steam

	Forced Air w/o Ducts
X	Forced Air w/ Ducts
	Forced Hot Water
	Electric Baseboard
	Elec. Ceil. Radiant
	Radiant (in-floor)
	Electric Wall Heat
	Space Heater
	Wall/Floor Furnace
	Forced Heat & Cool
	Heat Pump
	No Heating/Cooling

	Central Air
	Wood Furnace

(12) Electric

200	Amps Service

No./Qual. of Fixtures

	Ex.	X	Ord.		Min

No. of Elec. Outlets

	Many	X	Ave.		Few

(13) Plumbing

	Average Fixture(s)
1	3 Fixture Bath
	2 Fixture Bath
	Softener, Auto
	Softener, Manual
	Solar Water Heat
	No Plumbing
	Extra Toilet
	Extra Sink
	Separate Shower
	Ceramic Tile Floor
	Ceramic Tile Wains
	Ceramic Tub Alcove
	Vent Fan

(14) Water/Sewer

	Public Water
	Public Sewer
1	Water Well
1	1000 Gal Septic
	2000 Gal Septic

Lump Sum Items:

(15) Built-ins

	Appliance Allow.
	Cook Top
	Dishwasher
	Garbage Disposal
	Bath Heater
	Vent Fan
	Hot Tub
	Unvented Hood
	Vented Hood
	Intercom
	Jacuzzi Tub
	Jacuzzi repl.Tub
	Oven
	Microwave
	Standard Range
	Self Clean Range
	Sauna
	Trash Compactor
	Central Vacuum
	Security System

(15) Fireplaces

	Interior 1 Story
	Interior 2 Story
	2nd/Same Stack
	Two Sided
	Exterior 1 Story
	Exterior 2 Story
	Prefab 1 Story
	Prefab 2 Story
	Heat Circulator
	Raised Hearth
	Wood Stove
	Direct-Vented Gas

Class: CD
Effec. Age: 17
Floor Area: 1,120
Total Base New : 216,913 E.C.F.
Total Depr Cost: 179,381 X 1.297
Estimated T.C.V: 232,657

(16) Porches/Decks

Area	Type
132	CCP (2 Story)
95	WCP (1 Story)
2446	4in Concrete
76	Treated Wood

(17) Garage

Year Built:
Car Capacity:
Class: CD
Exterior: Pole
Brick Ven.: 0
Stone Ven.: 0
Common Wall: Detache
Foundation: 18 Inch
Finished ?:
Auto. Doors: 0
Mech. Doors: 0
Area: 1536
% Good: 0
Storage Area: 0
No Conc. Floor: 0

Bsmnt Garage: 2 Car

Carport Area:
Roof:

Cost Est. for Res. Bldg: 1 Single Family PLAIN Cls CD Blt 2007
(11) Heating System: Forced Air w/ Ducts
Ground Area = 896 SF Floor Area = 1120 SF.
Phy/Ab.Phy/Func/Econ/Comb. % Good=83/100/100/100/83
Building Areas

Stories	Exterior	Foundation	Size	Cost New	Depr. Cost	
1.25 Story	Siding	Basement	896			
			Total:	139,434	115,731	
Other Additions/Adjustments						
Water/Sewer						
1000 Gal Septic			1	4,582	3,803	
Water Well, 100 Feet			1	5,680	4,714	
Porches						
CCP (2 Story)			132	4,077	3,384	
WCP (1 Story)			95	4,217	3,500	
4in Concrete			2446	18,100	15,023	
Deck						
Treated Wood			76	2,159	1,792	
Garages						
Class: CD Exterior: Pole (Unfinished)						
Basement Garage: 2 Car			1	3,478	2,887	
Base Cost			1536	33,408	27,729	
Local Cost Items						
SHED			228	1,778	818	*4
			Totals:	216,913	179,381	

Notes:

ECF (RESIDENTIAL) 1.297 => TCV: 232,657

*** Information herein deemed reliable but not guaranteed***

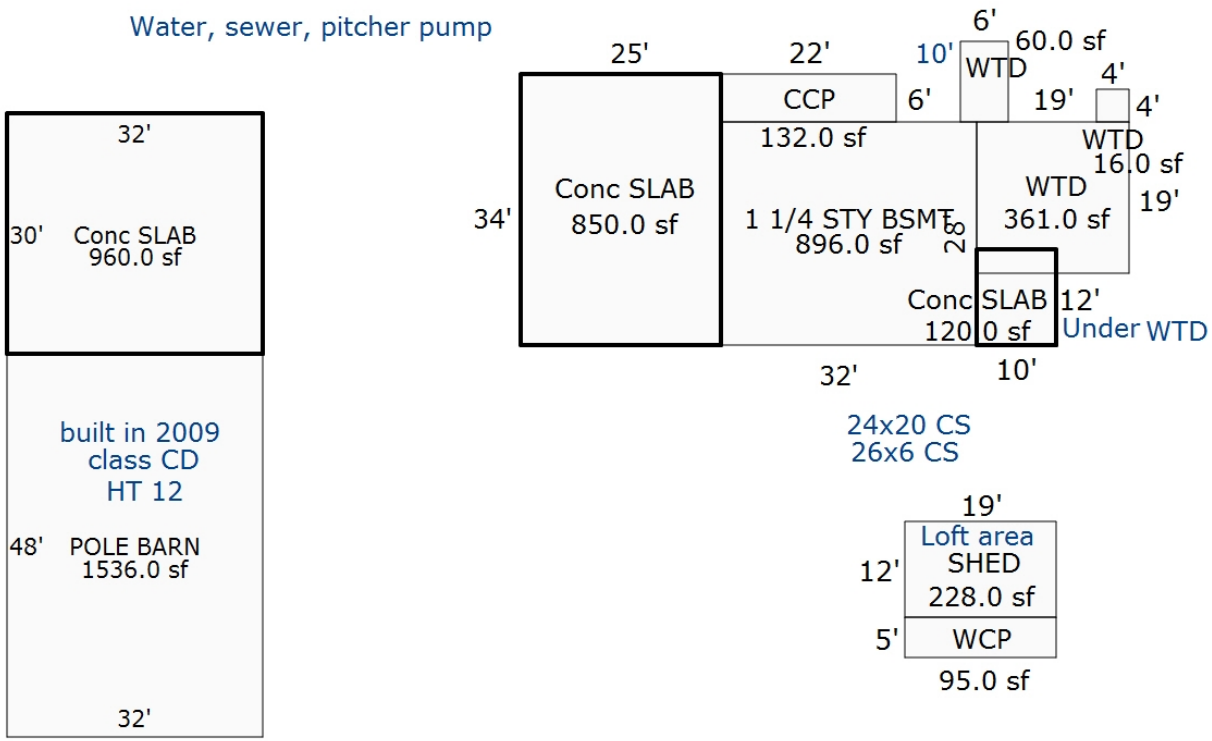

Sketch by Apex Sketch

*** Information herein deemed reliable but not guaranteed***

Parcel Number: 2410-33-4301 Jurisdiction: GREENWOOD TWP County: WEXFORD Printed on 02/15/2024

Grantor	Grantee	Sale Price	Sale Date	Inst. Type	Terms of Sale	Liber & Page	Verified By	Prcnt. Trans.
HERREMA, JOHN & JANICE	OGLE ET AL, ROBERT D.	27,400	12/05/1995	WD	03-ARM'S LENGTH	347:586	DEED	0.0

Property Address

Owner's Name/Address

OGLE, DANIEL R
& JASON R
2186 COTTAGE GROVE
MUSKEGON MI 49441

Tax Description

SW 1/4 OF SE 1/4 40 A. GW. SEC. 33 T24N R10W -MESICK-

Comments/Influences

Class: RESIDENTIAL-IMPROV Zoning:

School: MESICK CONSOLIDATED SCH DIST

P.R.E. 0%

:

2024 Est TCV 110,066 TCV/TFA: 0.00

Building Permit(s)	Date	Number	Status

X Improved | Vacant

	Public Improvements
	Dirt Road
X	Gravel Road
	Paved Road
	Storm Sewer
	Sidewalk
	Water
	Sewer
X	Electric
	Gas
	Curb
	Street Lights
	Standard Utilities
	Underground Utils.

	Topography of Site
	Level
X	Rolling
X	Low
	High
	Landscaped
	Swamp
X	Wooded
	Pond
	Waterfront
	Ravine
	Wetland
	Flood Plain
X	OPEN/PINES

Who	When	What
GLA	05/11/2020	INSPECTION
GLA	07/10/2019	INSPECTION
GLA	07/10/2019	INSPECTION

Land Value Estimates for Land Table 4010.LAND VALUES

Description	Frontage	Depth	* Factors * Front	Depth	Rate	%Adj.	Reason	Value
ACREAGE			39.000 Acres		2,722	100		106,158
ROW			1.000 Acres		0	100		0
			40.00 Total Acres		Total Est. Land Value =			106,158

Year	Land Value	Building Value	Assessed Value	Board of Review	Tribunal/ Other	Taxable Value
2024	53,100	1,900	55,000			18,208C
2023	47,000	1,700	48,700			17,341C
2022	37,400	1,600	39,000			16,516C
2021	33,300	1,800	35,100			15,989C

The Equalizer. Copyright (c) 1999 - 2009.
Licensed To: Township of Greenwood, County of Wexford, Michigan

*** Information herein deemed reliable but not guaranteed***

Building Type

X	Single Family
	Mobile Home
	Town Home
	Duplex
	A-Frame
X	Wood Frame

Building Style: PLAIN

Yr Built	Remodeled
0	0

Condition: Good

Room List

	Basement
	1st Floor
	2nd Floor
	Bedrooms

(1) Exterior

	Wood/Shingle
X	Aluminum/Vinyl
	Brick
X	Insulation

(2) Windows

	Many		Large
X	Avg.	X	Avg.
	Few		Small

	Wood Sash
	Metal Sash
X	Vinyl Sash
	Double Hung
	Horiz. Slide
	Casement
	Double Glass
	Patio Doors
X	Storms & Screens

(3) Roof

X	Gable		Gambrel
	Hip		Mansard
	Flat		Shed

X	Asphalt Shingle

Chimney:

(3) Roof (cont.)

	Eavestrough
X	Insulation
0	Front Overhang
0	Other Overhang

(4) Interior

X	Drywall		Plaster
	Paneled		Wood T&G

Trim & Decoration

	Ex	X	Ord		Min

Size of Closets

	Lg	X	Ord		Small

Doors:		Solid	X	H.C.	

(5) Floors

Kitchen:
Other: Linoleum
Other: Carpeted

(6) Ceilings

X	Drywall

(7) Excavation

Basement: 0 S.F.
Crawl: 0 S.F.
Slab: 0 S.F.
Height to Joists: 0.0

(8) Basement

	Conc. Block
	Poured Conc.
	Stone
	Treated Wood
	Concrete Floor

(9) Basement Finish

	Recreation SF
	Living SF
	Walkout Doors (B)
	No Floor SF
	Walkout Doors (A)

(10) Floor Support

Joists:
Unsupported Len:
Cntr.Sup:

(11) Heating/Cooling

X	Gas		Oil		Elec.
	Wood		Coal		Steam

	Forced Air w/o Ducts
X	Forced Air w/ Ducts
	Forced Hot Water
	Electric Baseboard
	Elec. Ceil. Radiant
	Radiant (in-floor)
	Electric Wall Heat
	Space Heater
	Wall/Floor Furnace
	Forced Heat & Cool
	Heat Pump
	No Heating/Cooling

	Central Air
	Wood Furnace

(12) Electric

150	Amps Service

No./Qual. of Fixtures

	Ex.	X	Ord.		Min

No. of Elec. Outlets

	Many	X	Ave.		Few

(13) Plumbing

1	Average Fixture(s)
	3 Fixture Bath
	2 Fixture Bath
	Softener, Auto
	Softener, Manual
	Solar Water Heat
	No Plumbing
	Extra Toilet
	Extra Sink
	Separate Shower
	Ceramic Tile Floor
	Ceramic Tile Wains
	Ceramic Tub Alcove
	Vent Fan

(14) Water/Sewer

	Public Water
	Public Sewer
	Water Well
	1000 Gal Septic
	2000 Gal Septic

Lump Sum Items:

(15) Built-ins

	Appliance Allow.
	Cook Top
	Dishwasher
	Garbage Disposal
	Bath Heater
	Vent Fan
	Hot Tub
	Unvented Hood
	Vented Hood
	Intercom
	Jacuzzi Tub
	Jacuzzi repl.Tub
	Oven
	Microwave
	Standard Range
	Self Clean Range
	Sauna
	Trash Compactor
	Central Vacuum
	Security System

(15) Fireplaces

	Interior 1 Story
	Interior 2 Story
	2nd/Same Stack
	Two Sided
	Exterior 1 Story
	Exterior 2 Story
	Prefab 1 Story
	Prefab 2 Story
	Heat Circulator
	Raised Hearth
	Wood Stove
	Direct-Vented Gas

Class: CD
Effec. Age: 19
Floor Area: 0
Total Base New : 5,669 E.C.F.
Total Depr Cost: 3,013 X 1.297
Estimated T.C.V: 3,908

(16) Porches/Decks

Area	Type

(17) Garage

Year Built:
Car Capacity:
Class:
Exterior:
Brick Ven.:
Stone Ven.:
Common Wall:
Foundation:
Finished ?:
Auto. Doors:
Mech. Doors:
Area:
% Good:
Storage Area:
No Conc. Floor:

Bsmnt Garage:

Carport Area:
Roof:

Cost Est. for Res. Bldg: 1 Single Family PLAIN Cls CD Blt 0
(11) Heating System: Forced Air w/ Ducts
Ground Area = 0 SF Floor Area = 0 SF.
Phy/Ab.Phy/Func/Econ/Comb. % Good=81/100/100/100/81
Building Areas

Stories	Exterior	Foundation	Size	Cost New	Depr. Cost	
Other Additions/Adjustments						
Local Cost Items						
SHED			207	1,615	743	*4
FREE STANDING ROOF			560	4,054	2,270	*5
			Totals:	5,669	3,013	

Notes:
ECF (RESIDENTIAL) 1.297 => TCV: 3,908

*** Information herein deemed reliable but not guaranteed***

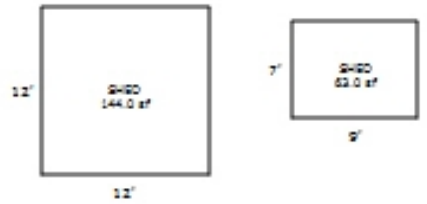

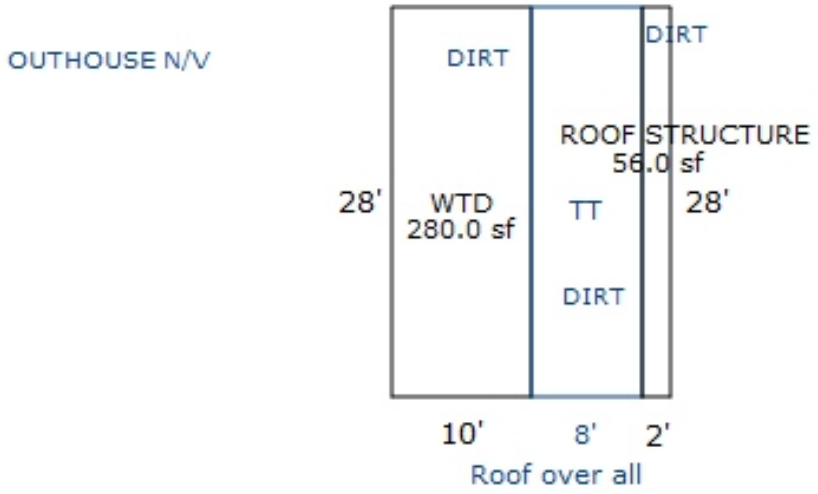

Sketch by Apex Sketch

*** Information herein deemed reliable but not guaranteed***

Parcel Number: 2410-33-4401 Jurisdiction: GREENWOOD TWP County: WEXFORD Printed on 02/15/2024

Grantor	Grantee	Sale Price	Sale Date	Inst. Type	Terms of Sale	Liber & Page	Verified By	Prcnt. Trans.
ANDERSON, KEVIN & PEGGY	LALONE, LEONARD L & DIANE	355,000	12/10/2020	WD	20-MULTI PARCEL SALE REF	688/2387	AGENT	100.0
BURKE, DOUGALS & CHRISTINA	ANDERSON, KEVIN & PEGGY	50,000	12/08/2020	WD	16-LC PAYOFF	688/2386	AGENT	0.0
BURKE, DOUGLAS R & CHRISTI	ANDERSON KEVIN & PEGGY-JO	0	03/17/2016	LC	21-NOT USED/OTHER		DEED	100.0
BURKE, BRIAN W & CHRISTINA	BURKE, DOUGLAS R & CHRISTI	0	11/05/2015	WD	16-LC PAYOFF	676/1041	DEED	0.0

Property Address

Owner's Name/Address

LALONE, LEONARD L & DIANE M
13593 GLENMAR DR
PEKIN IL 61554

Tax Description

S 1110 FT OF E 1/2 OF SE 1/4 EXC S 450 FT THEREOF. -20 A M/L- GW SEC 33 T24N R10W -MESICK- [[ASSESSED W/ 33-4101 '98

Comments/Influences

PAVED ROAD, ELECTRIAL AVAILABLE, OVERGROWN PINE, SWAMPY IN BACK

The Equalizer. Copyright (c) 1999 - 2009. Licensed To: Township of Greenwood, County of Wexford, Michigan

Class: RESIDENTIAL-VACANT Zoning:

School: MESICK CONSOLIDATED SCH DIST

P.R.E. 100% 05/31/2021

:

2024 Est TCV 62,400

Building Permit(s)	Date	Number	Status

	Improved	X	Vacant

	Public Improvements
	Dirt Road
	Gravel Road
X	Paved Road
	Storm Sewer
	Sidewalk
	Water
	Sewer
X	Electric
	Gas
	Curb
	Street Lights
	Standard Utilities
	Underground Utils.

	Topography of Site
	Level
X	Rolling
X	Low
	High
	Landscaped
	Swamp
X	Wooded
	Pond
	Waterfront
	Ravine
	Wetland
	Flood Plain
X	OPEN/PINES

Who	When	What
GLA	05/11/2020	INSPECTION
GLA	07/10/2019	INSPECTION
GLA	07/10/2019	INSPECTION

Land Value Estimates for Land Table 4010.LAND VALUES

Description	Frontage	Depth	* Factors * Front	Depth	Rate	%Adj.	Reason	Value
ACREAGE			19.500 Acres		3,200	100		62,400
ROW			0.500 Acres		0	100		0
			20.00 Total Acres		Total Est. Land Value =			62,400

Year	Land Value	Building Value	Assessed Value	Board of Review	Tribunal/ Other	Taxable Value
2024	31,200	0	31,200			22,548C
2023	25,400	0	25,400			21,475C
2022	21,500	0	21,500			20,453C
2021	19,800	0	19,800			19,800S

*** Information herein deemed reliable but not guaranteed***

Parcel Number: 2410-33-4402 Jurisdiction: GREENWOOD TWP County: WEXFORD Printed on 02/15/2024

Grantor	Grantee	Sale Price	Sale Date	Inst. Type	Terms of Sale	Liber & Page	Verified By	Prcnt. Trans.
OVERLA, SANDRA J	NOWICKI, RYAN	49,900	07/01/2019	WD	03-ARM'S LENGTH	6851/210	DEED	100.0
WHIPPLE, DAVE	OVERLA, JEFFREY & SANDRA	24,500	06/10/1999	WD	03-ARM'S LENGTH	368:84	DEED	0.0
GERKEN, JOHN	WHIPPLE, DAVE & LISA	12,000	09/23/1994	LC	03-ARM'S LENGTH	346:486	DEED	0.0

Property Address

2961 E 14 RD

Owner's Name/Address

NOWICKI, RYAN
1773 N WRIGHTS TOWN PLACE
TUCSON AZ 85715

Tax Description

PAR COM 200 FT W OF SE COR OF SEC: W 532 FT; N 450 FT; E 532 FT; S 450 FT TO POB; & E 200 FT OF S 450 FT OF E 1/2 OF SE 1/4. 7.56 A. GW. SEC. 33 T24N R10W - MESICK-

Comments/Influences

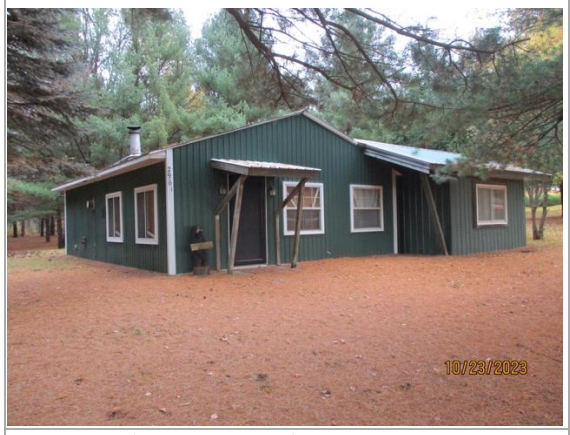

The Equalizer. Copyright (c) 1999 - 2009.
Licensed To: Township of Greenwood, County of Wexford, Michigan

Class: RESIDENTIAL-IMPROV Zoning:
School: MESICK CONSOLIDATED SCH DIST
P.R.E. 0%
:
2024 Est TCV 107,566 TCV/TFA: 120.05

Building Permit(s)	Date	Number	Status
Garage, Detached	04/04/2022	PB22-0052	ENTERED
Pole Barn	08/18/2021	PB21-124	ENTERED
RESIDENTIAL - REMODEL	01/10/2006	PP4109	
RESIDENTIAL - NEW	12/28/2005	PM8857	

X Improved | Vacant

Public Improvements

- Dirt Road
- X Gravel Road
- X Paved Road
- Storm Sewer
- Sidewalk
- Water
- Sewer
- X Electric
- Gas
- Curb
- Street Lights
- Standard Utilities
- Underground Utils.

Topography of Site

- Level
- X Rolling
- X Low
- High
- Landscaped
- Swamp
- X Wooded
- Pond
- Waterfront
- Ravine
- Wetland
- Flood Plain
- X OPEN/PINES

Who	When	What
JB	10/23/2023	INSPECTION
GLA	10/31/2022	INSPECTION
GLA	05/11/2020	INSPECTION

Land Value Estimates for Land Table 4010.LAND VALUES

Description	Frontage	Depth	* Factors * Front	Depth	Rate	%Adj.	Reason	Value
ACREAGE			6.660 Acres		5,112	100		34,046
ROW			0.900 Acres		0	100		0
			7.56 Total Acres		Total Est. Land Value =			34,046

Land Improvement Cost Estimates

Description	Rate	Size	% Good	Cash Value
Wood Frame	23.02	100	41	944
Total Estimated Land Improvements True Cash Value =				944

Year	Land Value	Building Value	Assessed Value	Board of Review	Tribunal/ Other	Taxable Value
2024	17,000	36,800	53,800			42,645C
2023	11,700	31,200	42,900			40,615C
2022	10,000	22,300	32,300			32,300S
2021	11,300	22,600	33,900			33,157C

*** Information herein deemed reliable but not guaranteed***

Building Type

X	Single Family
	Mobile Home
	Town Home
	Duplex
	A-Frame
X	Wood Frame

Building Style: PLAIN

Yr Built	Remodeled
0	0

Condition: Average

Room List

	Basement
	1st Floor
	2nd Floor
	Bedrooms

(1) Exterior

	Wood/Shingle
	Aluminum/Vinyl
	Brick
X	Aluminum
X	Insulation

(2) Windows

X	Many Avg. Few	X	Large Avg. Small

	Wood Sash
	Metal Sash
X	Vinyl Sash
X	Double Hung
X	Horiz. Slide
	Casement
	Double Glass
	Patio Doors
X	Storms & Screens

(3) Roof

X	Gable Hip Flat		Gambrel Mansard Shed
X	Asphalt Shingle		

Chimney: Metal

(3) Roof (cont.)

	Eavestrough
X	Insulation
0	Front Overhang
0	Other Overhang

(4) Interior

X	Drywall Paneled		Plaster Wood T&G

Trim & Decoration

	Ex	X	Ord		Min

Size of Closets

	Lg	X	Ord		Small

Doors:		Solid	X	H.C.	

(5) Floors

Kitchen:
Other: Linoleum
Other: Carpeted

(6) Ceilings

X	Drywall

(7) Excavation

Basement: 0 S.F.
Crawl: 0 S.F.
Slab: 896 S.F.
Height to Joists: 0.0

(8) Basement

	Conc. Block
	Poured Conc.
	Stone
	Treated Wood
	Concrete Floor

(9) Basement Finish

	Recreation SF
	Living SF
	Walkout Doors (B)
	No Floor SF
	Walkout Doors (A)

(10) Floor Support

Joists:
Unsupported Len:
Cntr.Sup:

(11) Heating/Cooling

X	Gas Wood		Oil Coal		Elec. Steam

	Forced Air w/o Ducts
X	Forced Air w/ Ducts
	Forced Hot Water
	Electric Baseboard
	Elec. Ceil. Radiant
	Radiant (in-floor)
	Electric Wall Heat
	Space Heater
	Wall/Floor Furnace
	Forced Heat & Cool
	Heat Pump
	No Heating/Cooling
	Central Air
	Wood Furnace

(12) Electric

150	Amps Service

No./Qual. of Fixtures

	Ex.	X	Ord.		Min

No. of Elec. Outlets

	Many	X	Ave.		Few

(13) Plumbing

	Average Fixture(s)
1	3 Fixture Bath
	2 Fixture Bath
	Softener, Auto
	Softener, Manual
	Solar Water Heat
	No Plumbing
	Extra Toilet
	Extra Sink
	Separate Shower
	Ceramic Tile Floor
	Ceramic Tile Wains
	Ceramic Tub Alcove
	Vent Fan

(14) Water/Sewer

	Public Water
	Public Sewer
1	Water Well
1	1000 Gal Septic
	2000 Gal Septic

Lump Sum Items:

(15) Built-ins

	Appliance Allow.
	Cook Top
	Dishwasher
	Garbage Disposal
	Bath Heater
	Vent Fan
	Hot Tub
	Unvented Hood
	Vented Hood
	Intercom
	Jacuzzi Tub
	Jacuzzi repl.Tub
	Oven
	Microwave
	Standard Range
	Self Clean Range
	Sauna
	Trash Compactor
	Central Vacuum
	Security System

(15) Fireplaces

	Interior 1 Story
	Interior 2 Story
	2nd/Same Stack
	Two Sided
	Exterior 1 Story
	Exterior 2 Story
	Prefab 1 Story
	Prefab 2 Story
	Heat Circulator
	Raised Hearth
1	Wood Stove
	Direct-Vented Gas

Class: D
Effec. Age: 44
Floor Area: 896
Total Base New : 133,230 E.C.F.
Total Depr Cost: 55,957 X 1.297
Estimated T.C.V: 72,576

(16) Porches/Decks

Area	Type
48	WGEP (1 Story)
25	WCP (1 Story)

(17) Garage

Year Built:
Car Capacity:
Class: CD
Exterior: Pole
Brick Ven.: 0
Stone Ven.: 0
Common Wall: Detache
Foundation: 18 Inch
Finished ?:
Auto. Doors: 0
Mech. Doors: 0
Area: 720
% Good: 0
Storage Area: 0
No Conc. Floor: 0

Bsmnt Garage:

Carport Area:
Roof:

Cost Est. for Res. Bldg: 1 Single Family PLAIN Cls D Blt 0
(11) Heating System: Forced Air w/ Ducts
Ground Area = 896 SF Floor Area = 896 SF.
Phy/Ab.Phy/Func/Econ/Comb. % Good=56/100/75/100/42
Building Areas

Stories	Exterior	Foundation	Size	Cost New	Depr. Cost
1 Story	Siding	Slab	768		
1 Story	Siding	Slab	128		
			Total:	97,222	40,833
Other Additions/Adjustments					
Water/Sewer					
1000 Gal Septic			1	4,293	1,803
Water Well, 100 Feet			1	5,545	2,329
Porches					
WGEP (1 Story)			48	5,085	2,136
WCP (1 Story)			25	1,718	722
Garages					
Class: CD Exterior: Pole (Unfinished)					
Base Cost			720	17,575	7,381
Fireplaces					
Wood Stove			1	1,792	753
			Totals:	133,230	55,957

Notes:
ECF (RESIDENTIAL) 1.297 => TCV: 72,576

*** Information herein deemed reliable but not guaranteed***

2410-33-4402

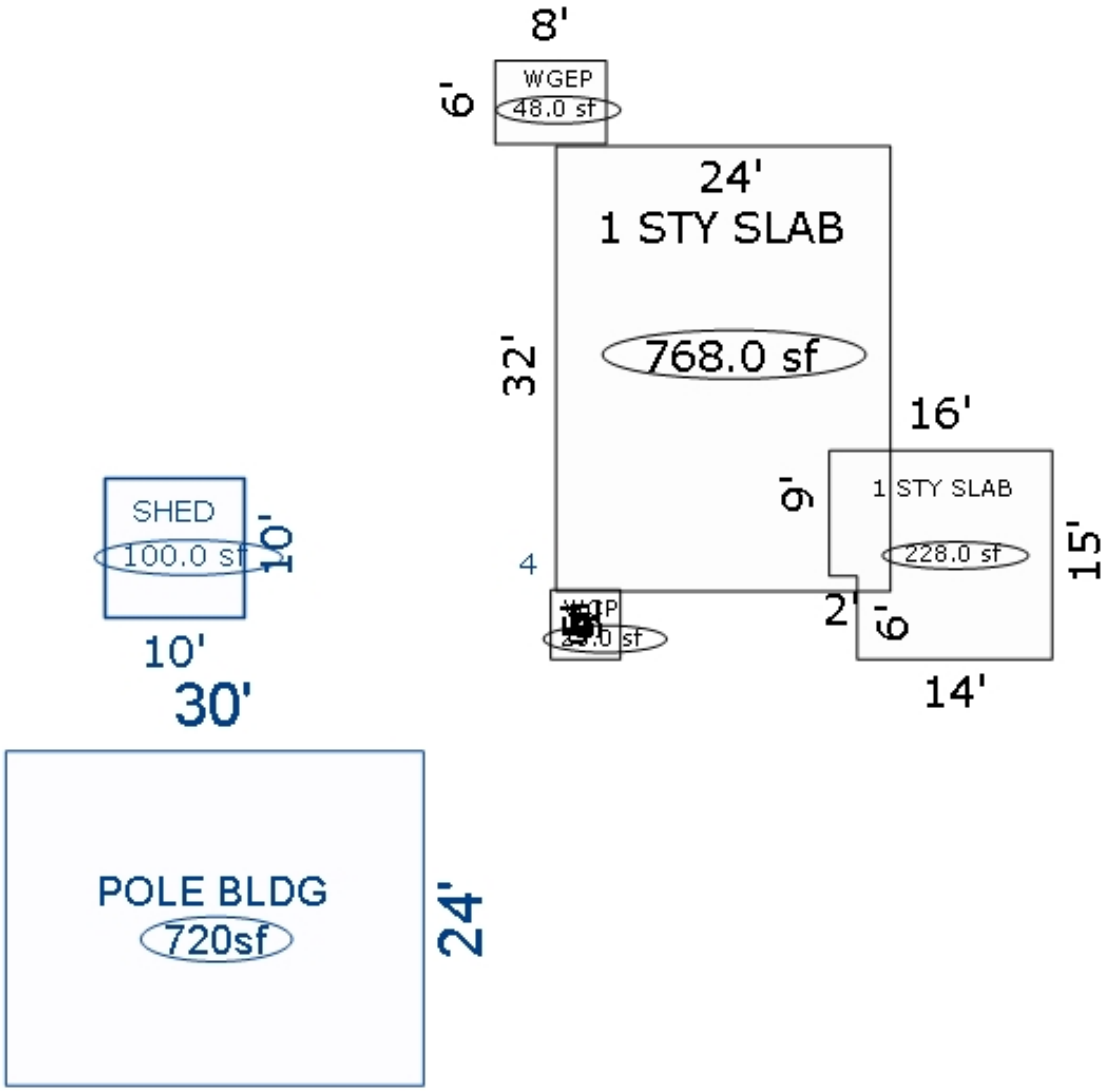

*** Information herein deemed reliable but not guaranteed***

Parcel Number: 2410-33-4403 Jurisdiction: GREENWOOD TWP County: WEXFORD Printed on 02/15/2024

Grantor	Grantee	Sale Price	Sale Date	Inst. Type	Terms of Sale	Liber & Page	Verified By	Prcnt. Trans.
PORTER, JOSEPH & DYKSTRA,	PORTER, JOSEPH M	0	08/03/2018	QC	21-NOT USED/OTHER	683/909	DEED	0.0
OGLE, JASON R	PORTER, JOSEPH & DYKSTRA,	14,000	08/02/2016	WD	03-ARM'S LENGTH	678/531	DEED	100.0
GERKEN, JOHN T.	TRUSS, VIOLA R.	5,900	01/25/1995	LC	03-ARM'S LENGTH	343:38	DEED	0.0

Property Address

Owner's Name/Address

PORTER, JOSEPH M
6071 12 MILE RD NE
ROCKFORD MI 49341

Tax Description

PAR COM AT SE COR OF SEC; TH W 732 FT TO POB; N 450 FT; W TO E 1/8 LINE; S TO SEC LINE; E TO POB. - 6.07 A.- GW. SEC. 33 T24N R10W -MESICK-

Comments/Influences

Class: RESIDENTIAL-VACANT Zoning:

School: MESICK CONSOLIDATED SCH DIST

P.R.E. 0%

:

2024 Est TCV 28,755

Building Permit(s)	Date	Number	Status

	Improved	X	Vacant

	Public Improvements
X	Dirt Road
X	Gravel Road
	Paved Road
	Storm Sewer
	Sidewalk
	Water
	Sewer
	Electric
	Gas
	Curb
	Street Lights
	Standard Utilities
	Underground Utils.

	Topography of Site
	Level
X	Rolling
X	Low
	High
	Landscaped
X	Swamp
X	Wooded
	Pond
	Waterfront
	Ravine
	Wetland
	Flood Plain
X	OPEN/PINES

Who	When	What
GLA	05/11/2020	INSPECTION
GLA	07/10/2019	INSPECTION
GLA	07/10/2019	INSPECTION

Land Value Estimates for Land Table 4010.LAND VALUES

Description	Frontage	Depth	* Factors * Front	Depth	Rate	%Adj.	Reason	Value
ACREAGE			5.625 Acres		5,112	100		28,755
ROW			0.445 Acres		0	100		0
			6.07 Total Acres		Total Est. Land Value =			28,755

Year	Land Value	Building Value	Assessed Value	Board of Review	Tribunal/ Other	Taxable Value
2024	14,400	0	14,400			9,177C
2023	11,100	0	11,100			8,740C
2022	8,400	0	8,400			8,324C
2021	9,600	0	9,600			8,059C

The Equalizer. Copyright (c) 1999 - 2009.
Licensed To: Township of Greenwood, County of Wexford, Michigan

*** Information herein deemed reliable but not guaranteed***

Parcel Number: 2410-34-1101 Jurisdiction: GREENWOOD TWP County: WEXFORD Printed on 02/15/2024

Grantor	Grantee	Sale Price	Sale Date	Inst. Type	Terms of Sale	Liber & Page	Verified By	Prcnt. Trans.
AUSTIN, DAVID F & LINDA M		0	01/07/2015	OTH	21-NOT USED/OTHER	673/1038	DEED	0.0
AUSTIN, LINDA M & DAVID F	WOOD, JACQUELINE & JERAMY	164,000	10/24/2014	WD	03-ARM'S LENGTH	672/807	DEED	100.0
CIT GROUP/CONSUMER FINANCE	AUSTIN, LINDA M & DAVID F	64,600	12/15/2006	WD	03-ARM'S LENGTH	597:599	DEED	0.0
ROBERTS, WILBUR	CIT GROUP	105,807	08/26/2005	SD	21-NOT USED/OTHER	576:2547	DEED	0.0

Property Address

3880 E 12 RD

Owner's Name/Address

WOOD, JACQUELINE & JERAMY J
3880 E 12 RD
MANTON MI 49663

Tax Description

PARCEL "A" DESC AS COM AT NE COR OF SEC; TH S 644.10 FT; W 635.81 FT; N 644.10 FT; E 133.12 FT; S 204.28 FT; E 215.37 FT; N 204.28 FT; E 287.32 FT TO POB. --9 A. M/L GW. SEC. 34 T24N R10W -MANTON-

Comments/Influences

The Equalizer. Copyright (c) 1999 - 2009. Licensed To: Township of Greenwood, County of Wexford, Michigan

Class: RESIDENTIAL-IMPROV Zoning:

School: MANTON CONSOLIDATED SCHOOLS

P.R.E. 100% 03/28/2017

:

2024 Est TCV 398,505 TCV/TFA: 245.99

Building Permit(s)	Date	Number	Status
RESIDENTIAL - REMODEL	04/25/2003	PM6680	
RESIDENTIAL - REMODEL	04/03/2001	PB10150	

X	Improved		Vacant

	Public Improvements
	Dirt Road
X	Gravel Road
	Paved Road
	Storm Sewer
	Sidewalk
	Water
	Sewer
X	Electric
	Gas
	Curb
	Street Lights
	Standard Utilities
	Underground Utils.

	Topography of Site
	Level
X	Rolling
X	Low
X	High
	Landscaped
	Swamp
X	Wooded
	Pond
	Waterfront
	Ravine
	Wetland
	Flood Plain
X	OPEN

Who	When	What
GLA	05/13/2021	INSPECTION
GLA	07/10/2019	INSPECTION
GLA	07/10/2019	INSPECTION

Land Value Estimates for Land Table 4010.LAND VALUES

Description	Frontage	Depth	* Factors * Front	Depth	Rate	%Adj.	Reason	Value
ACREAGE			8.200 Acres		4,879	100		40,010
ROW			0.800 Acres		0	100		0
			9.00 Total Acres		Total Est. Land Value =			40,010

Land Improvement Cost Estimates

Description	Rate	Size	% Good	Cash Value
D/W/P: Patio Blocks	15.72	116	56	1,021
D/W/P: 3.5 Concrete	6.63	320	56	1,188
Total Estimated Land Improvements True Cash Value =				2,209

Year	Land Value	Building Value	Assessed Value	Board of Review	Tribunal/ Other	Taxable Value
2024	20,000	179,300	199,300			130,638C
2023	12,300	146,200	158,500			124,418C
2022	11,100	123,200	134,300			118,494C
2021	11,900	106,000	117,900			95,542C

*** Information herein deemed reliable but not guaranteed***

Building Type

X	Single Family
	Mobile Home
	Town Home
	Duplex
	A-Frame
X	Wood Frame

Building Style: PLAIN

Yr Built	Remodeled
0	0

Condition: Good

Room List

	Basement
	1st Floor
	2nd Floor
	Bedrooms

(1) Exterior

X	Wood/Shingle
	Aluminum/Vinyl
	Brick
X	Insulation

(2) Windows

X	Many Avg. Few	X	Large Avg. Small

	Wood Sash
	Metal Sash
X	Vinyl Sash
	Double Hung
	Horiz. Slide
	Casement
	Double Glass
	Patio Doors
X	Storms & Screens

(3) Roof

X	Gable Hip Flat		Gambrel Mansard Shed
X	Asphalt Shingle		

Chimney:

(3) Roof (cont.)

	Eavestrough
X	Insulation
0	Front Overhang
0	Other Overhang

(4) Interior

X	Drywall Paneled		Plaster Wood T&G

Trim & Decoration

	Ex	X	Ord		Min

Size of Closets

	Lg	X	Ord		Small

Doors:		Solid	X	H.C.	

(5) Floors

Kitchen:
Other: Linoleum
Other: Carpeted

(6) Ceilings

X	Drywall

(7) Excavation

Basement: 1620 S.F.
Crawl: 0 S.F.
Slab: 0 S.F.
Height to Joists: 0.0

(8) Basement

	Conc. Block
	Poured Conc.
	Stone
	Treated Wood
	Concrete Floor

(9) Basement Finish

	Recreation	SF
	Living	SF
1	Walkout Doors (B)	
	No Floor	SF
	Walkout Doors (A)	

(10) Floor Support

Joists:
Unsupported Len:
Cntr.Sup:

(11) Heating/Cooling

X	Gas Wood		Oil Coal		Elec. Steam	

	Forced Air w/o Ducts
X	Forced Air w/ Ducts
	Forced Hot Water
	Electric Baseboard
	Elec. Ceil. Radiant
	Radiant (in-floor)
	Electric Wall Heat
	Space Heater
	Wall/Floor Furnace
	Forced Heat & Cool
	Heat Pump
	No Heating/Cooling

X	Central Air
	Wood Furnace

(12) Electric

150	Amps Service

No./Qual. of Fixtures

	Ex.	X	Ord.		Min

No. of Elec. Outlets

	Many	X	Ave.		Few

(13) Plumbing

	Average Fixture(s)
2	3 Fixture Bath
	2 Fixture Bath
	Softener, Auto
	Softener, Manual
	Solar Water Heat
	No Plumbing
	Extra Toilet
	Extra Sink
	Separate Shower
	Ceramic Tile Floor
	Ceramic Tile Wains
	Ceramic Tub Alcove
	Vent Fan

(14) Water/Sewer

	Public Water
	Public Sewer
1	Water Well
1	1000 Gal Septic
	2000 Gal Septic

Lump Sum Items:

(15) Built-ins

	Appliance Allow.
	Cook Top
	Dishwasher
	Garbage Disposal
	Bath Heater
	Vent Fan
	Hot Tub
	Unvented Hood
	Vented Hood
	Intercom
	Jacuzzi Tub
	Jacuzzi repl.Tub
	Oven
	Microwave
	Standard Range
	Self Clean Range
	Sauna
	Trash Compactor
	Central Vacuum
	Security System

(15) Fireplaces

	Interior 1 Story
	Interior 2 Story
	2nd/Same Stack
	Two Sided
	Exterior 1 Story
	Exterior 2 Story
	Prefab 1 Story
	Prefab 2 Story
	Heat Circulator
	Raised Hearth
	Wood Stove
	Direct-Vented Gas

Class: C
Effec. Age: 14
Floor Area: 1,620
Total Base New : 327,637 E.C.F.
Total Depr Cost: 274,700 X 1.297
Estimated T.C.V: 356,286

(16) Porches/Decks

Area	Type
192	WCP (1 Story)
128	Treated Wood

(17) Garage

Year Built:
Car Capacity:
Class: D
Exterior: Pole
Brick Ven.: 0
Stone Ven.: 0
Common Wall: Detache
Foundation: 18 Inch
Finished ?:
Auto. Doors: 0
Mech. Doors: 0
Area: 1160
% Good: 46
Storage Area: 0
No Conc. Floor: 1160

Bsmnt Garage:

Carport Area:
Roof:

Cost Est. for Res. Bldg: 1 Single Family PLAIN Cls C Blt 0
(11) Heating System: Forced Air w/ Ducts , Air Conditioning
Ground Area = 1620 SF Floor Area = 1620 SF.
Phy/Ab.Phy/Func/Econ/Comb. % Good=86/100/100/100/86

Building Areas

Stories	Exterior	Foundation	Size	Cost New	Depr. Cost	
1 Story	Siding	Basement	1,620			
			Total:	245,743	211,340	
Other Additions/Adjustments						
Basement, Outside Entrance, Below Grade			1	2,578	2,217	
Plumbing						
3 Fixture Bath			1	4,678	4,023	
Water/Sewer						
1000 Gal Septic			1	4,899	4,213	
Water Well, 100 Feet			1	5,849	5,030	
Porches						
WCP (1 Story)			192	7,874	6,772	
Deck						
Treated Wood			128	3,110	2,675	
Garages						
Class: D Exterior: Pole (Unfinished)						
Base Cost			1160	22,307	10,261	*4
No Concrete Floor			1160	-6,508	-2,994	
Class: CD Exterior: Pole (Unfinished)						
Base Cost			1620	35,235	30,302	
Local Cost Items						
SHED			240	1,872	861	*4
			Totals:	327,637	274,700	

Notes:

ECF (RESIDENTIAL) 1.297 => TCV: 356,286

*** Information herein deemed reliable but not guaranteed***

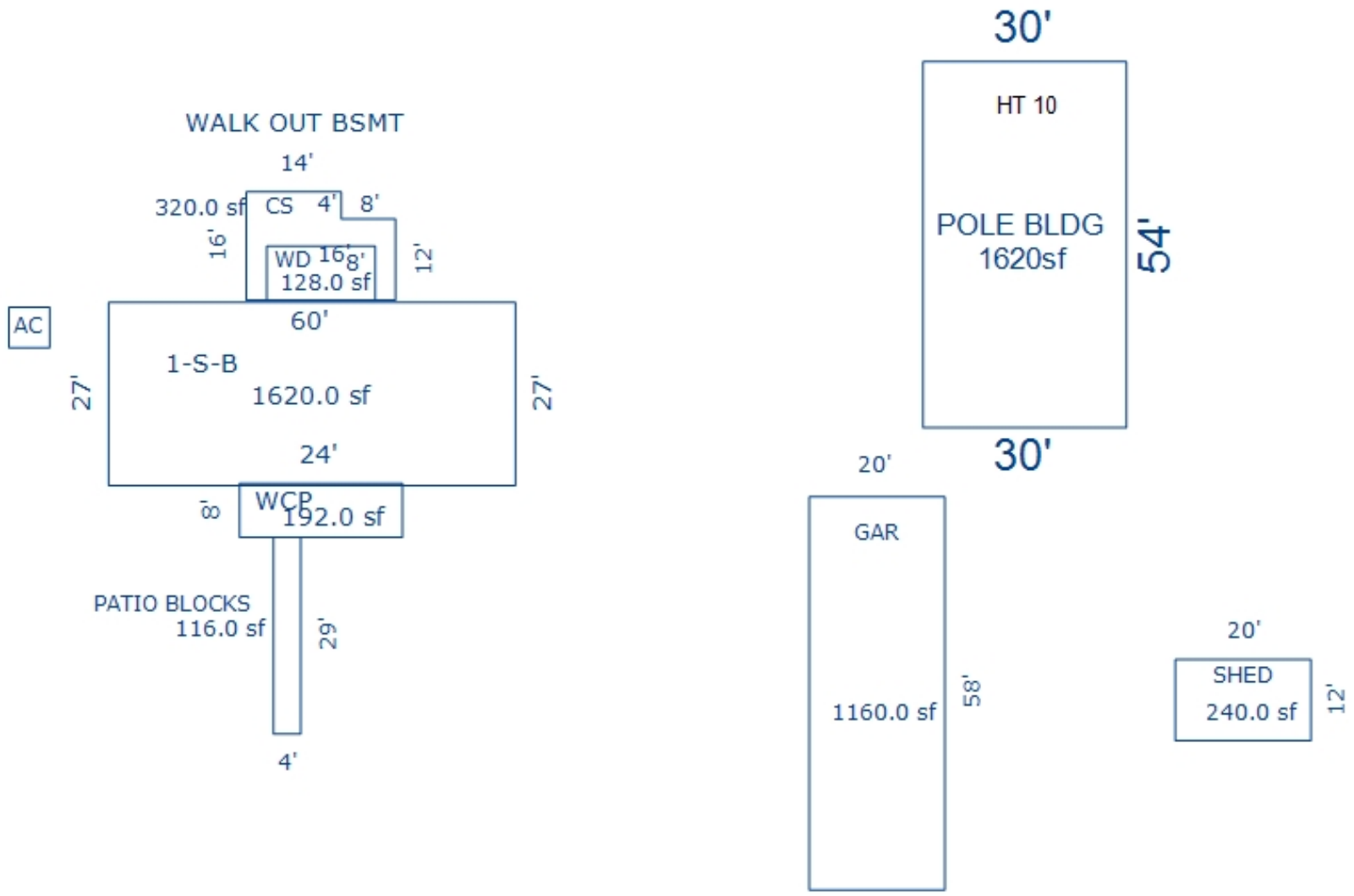

*** Information herein deemed reliable but not guaranteed***

Parcel Number: 2410-34-1102 Jurisdiction: GREENWOOD TWP County: WEXFORD Printed on 02/15/2024

Grantor	Grantee	Sale Price	Sale Date	Inst. Type	Terms of Sale	Liber & Page	Verified By	Prcnt. Trans.
LANGENDERFER, ARLENE B LE	WEXFORD COUNTY ROAD COMMIS	285,000	06/24/2022	WD	03-ARM'S LENGTH	693/1032	DEED	100.0
LANGENDERFER, ARLENE B	LANGENDERFER, ARLENE B LE	0	05/30/2000	QC	18-LIFE ESTATE	647/2389	DEED	0.0

Property Address

6601 N 33 RD

Owner's Name/Address

WEXFORD COUNTY ROAD COMMISSION
85 WEST M 115
BOON MI 49618

Tax Description

S 1/4 OF NE 1/4 OF NE 1/4 & N 1/4 OF SE 1/4 OF NE 1/4 20 A. GW. SEC. 34 T24N R10W -MANTON-

Comments/Influences

The Equalizer. Copyright (c) 1999 - 2009.
Licensed To: Township of Greenwood, County of Wexford, Michigan

Class: RESIDENTIAL-IMPROV Zoning:
School: MANTON CONSOLIDATED SCHOOLS
P.R.E. 0%
:
2024 Est TCV 0 TCV/TFA: 0.00

Building Permit(s)	Date	Number	Status
RESIDENTIAL - REMODEL	02/02/2000	PM3950	

X	Improved		Vacant

	Public Improvements
	Dirt Road
X	Gravel Road
	Paved Road
	Storm Sewer
	Sidewalk
	Water
	Sewer
X	Electric
	Gas
	Curb
	Street Lights
	Standard Utilities
	Underground Utils.

	Topography of Site
	Level
X	Rolling
	Low
X	High
	Landscaped
	Swamp
	Wooded
	Pond
	Waterfront
	Ravine
	Wetland
	Flood Plain
X	OPEN

Who	When	What
GLA	05/11/2020	INSPECTION
GLA	07/10/2019	INSPECTION
GLA	07/10/2019	INSPECTION

Land Value Estimates for Land Table 4010.LAND VALUES

Description	Frontage	Depth	* Factors * Front	Depth	Rate	%Adj.	Reason	Value
ACREAGE			19.500 Acres		3,200	100		62,400
ROW			0.500 Acres		0	100		0
			20.00 Total Acres		Total Est. Land Value =			62,400

Land Improvement Cost Estimates

Description	Rate	Size	% Good	Cash Value
Wood Frame	18.03	1374	10	2,477
Wood Frame	18.03	1600	10	2,885
Total Estimated Land Improvements True Cash Value =				5,362

Year	Land Value	Building Value	Assessed Value	Board of Review	Tribunal/ Other	Taxable Value
2024	EXEMPT	EXEMPT	EXEMPT			EXEMPT
2023	EXEMPT	EXEMPT	EXEMPT			EXEMPT
2022	21,500	37,600	59,100			23,136C
2021	19,800	38,000	57,800			22,397C

*** Information herein deemed reliable but not guaranteed***

Building Type

X	Single Family
	Mobile Home
	Town Home
	Duplex
	A-Frame
X	Wood Frame

Building Style: PLAIN

Yr Built	Remodeled
0	0

Condition: Good

Room List

	Basement
	1st Floor
	2nd Floor
	Bedrooms

(1) Exterior

X	Wood/Shingle
	Aluminum/Vinyl
	Brick
X	Insulation

(2) Windows

	Many		Large
X	Avg.	X	Avg.
	Few		Small

X	Wood Sash
	Metal Sash
	Vinyl Sash
	Double Hung
	Horiz. Slide
	Casement
	Double Glass
	Patio Doors
X	Storms & Screens

(3) Roof

X	Gable		Gambrel
	Hip		Mansard
	Flat		Shed

X	Asphalt Shingle

Chimney:

(3) Roof (cont.)

	Eavestrough
X	Insulation
0	Front Overhang
0	Other Overhang

(4) Interior

X	Drywall		Plaster
	Paneled		Wood T&G

Trim & Decoration

	Ex	X	Ord		Min

Size of Closets

	Lg	X	Ord		Small

Doors:		Solid	X	H.C.	

(5) Floors

Kitchen:
Other: Linoleum
Other: Carpeted

(6) Ceilings

X	Drywall

(7) Excavation

Basement: 872 S.F.
Crawl: 0 S.F.
Slab: 0 S.F.
Height to Joists: 0.0

(8) Basement

	Conc. Block
	Poured Conc.
	Stone
	Treated Wood
	Concrete Floor

(9) Basement Finish

	Recreation SF
	Living SF
	Walkout Doors (B)
	No Floor SF
	Walkout Doors (A)

(10) Floor Support

Joists:
Unsupported Len:
Cntr.Sup:

(11) Heating/Cooling

X	Gas		Oil		Elec.
	Wood		Coal		Steam

	Forced Air w/o Ducts
X	Forced Air w/ Ducts
	Forced Hot Water
	Electric Baseboard
	Elec. Ceil. Radiant
	Radiant (in-floor)
	Electric Wall Heat
	Space Heater
	Wall/Floor Furnace
	Forced Heat & Cool
	Heat Pump
	No Heating/Cooling

	Central Air
	Wood Furnace

(12) Electric

100	Amps Service

No./Qual. of Fixtures

	Ex.	X	Ord.		Min

No. of Elec. Outlets

	Many	X	Ave.		Few

(13) Plumbing

	Average Fixture(s)
1	3 Fixture Bath
	2 Fixture Bath
	Softener, Auto
	Softener, Manual
	Solar Water Heat
	No Plumbing
	Extra Toilet
	Extra Sink
	Separate Shower
	Ceramic Tile Floor
	Ceramic Tile Wains
	Ceramic Tub Alcove
	Vent Fan

(14) Water/Sewer

	Public Water
	Public Sewer
1	Water Well
1	1000 Gal Septic
	2000 Gal Septic

Lump Sum Items:

(15) Built-ins

	Appliance Allow.
	Cook Top
	Dishwasher
	Garbage Disposal
	Bath Heater
	Vent Fan
	Hot Tub
	Unvented Hood
	Vented Hood
	Intercom
	Jacuzzi Tub
	Jacuzzi repl.Tub
	Oven
	Microwave
	Standard Range
	Self Clean Range
	Sauna
	Trash Compactor
	Central Vacuum
	Security System

(15) Fireplaces

	Interior 1 Story
	Interior 2 Story
	2nd/Same Stack
	Two Sided
	Exterior 1 Story
	Exterior 2 Story
	Prefab 1 Story
	Prefab 2 Story
	Heat Circulator
	Raised Hearth
	Wood Stove
	Direct-Vented Gas

Class: D
Effec. Age: 49
Floor Area: 872
Total Base New : 183,170 E.C.F.
Total Depr Cost: 78,199 X 1.297
Estimated T.C.V: 101,424

(16) Porches/Decks

Area	Type
150	WGEP (1 Story)
154	WGEP (1 Story)
36	CPP
16	WPP

(17) Garage

Year Built:
Car Capacity:
Class: D
Exterior: Siding
Brick Ven.: 0
Stone Ven.: 0
Common Wall: Detache
Foundation: 18 Inch
Finished ?:
Auto. Doors: 0
Mech. Doors: 0
Area: 234
% Good: 36
Storage Area: 0
No Conc. Floor: 0

Bsmnt Garage:

Carport Area:
Roof:

Cost Est. for Res. Bldg: 1 Single Family PLAIN Cls D Blt 0
(11) Heating System: Forced Air w/ Ducts
Ground Area = 872 SF Floor Area = 872 SF.
Phy/Ab.Phy/Func/Econ/Comb. % Good=51/100/100/100/51
Building Areas

Stories	Exterior	Foundation	Size	Cost New	Depr. Cost	
1 Story	Siding	Basement	872			
			Total:	111,198	56,711	
Other Additions/Adjustments						
Water/Sewer						
1000 Gal Septic			1	4,293	2,189	
Water Well, 100 Feet			1	5,545	2,828	
Porches						
WGEP (1 Story)			150	10,505	5,358	
WGEP (1 Story)			154	10,703	5,459	
CPP			36	854	436	
WPP			16	758	387	
Garages						
Class: D Exterior: Siding Foundation: 18 Inch (Unfinished)						
Base Cost			234	9,241	3,327	*3
Class: D Exterior: Pole (Unfinished)						
Base Cost			2208	42,460	2,123	*5
No Concrete Floor			2208	-12,387	-619	
			Totals:	183,170	78,199	

Notes:
ECF (RESIDENTIAL) 1.297 => TCV: 101,424

*** Information herein deemed reliable but not guaranteed***

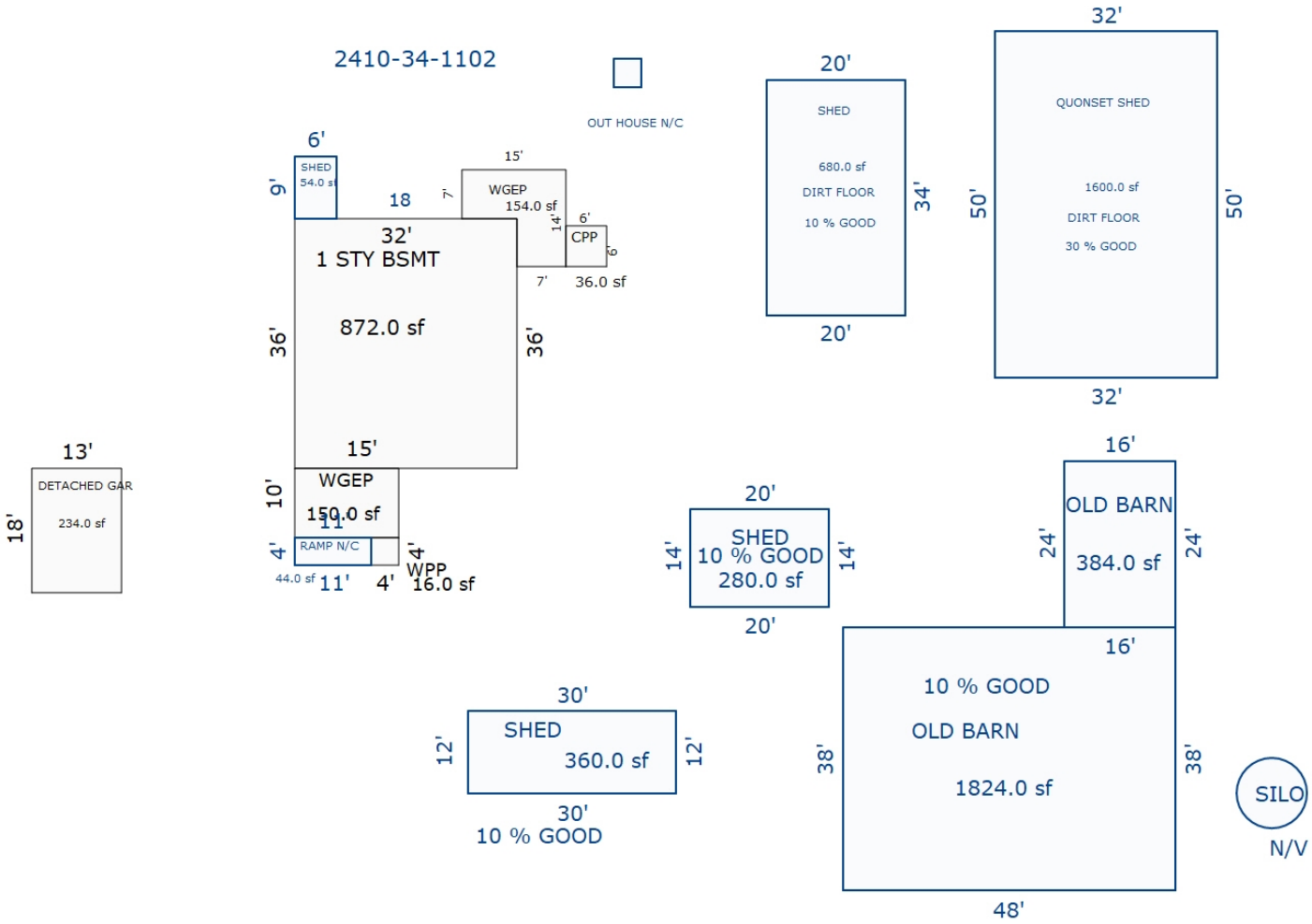

Sketch by Apex Sketch

*** Information herein deemed reliable but not guaranteed***

Parcel Number: 2410-34-1103 Jurisdiction: GREENWOOD TWP County: WEXFORD Printed on 02/15/2024

Grantor	Grantee	Sale Price	Sale Date	Inst. Type	Terms of Sale	Liber & Page	Verified By	Prcnt. Trans.
AUSTIN, LINDA M	AUSTIN, LINDA M	0	10/25/2019	WD	18-LIFE ESTATE	686/284	DEED	0.0
ROBERTS, WILBER J.	AUSTIN, DAVID & LINDA	17,828	11/09/1995	WD	03-ARM'S LENGTH	346:934	DEED	0.0

Property Address

Owner's Name/Address

AUSTIN, LINDA M
3630 E 12 RD
MANTON MI 49663

Tax Description

PAR COM AT NE COR OF SEC; TH S 644.10 FT TO POB: TH S 352.07 FT; W 1286.39 FT TO E 1/16 LINE OF SEC; TH N 992.63 FT TO N SEC LINE; E 644.93 FT; S 644.10 FT; E 635.81 FT TO POB. AKA PARCEL "B" 20 A. M/L GW. SEC. 34 T24N R10W -MANTON-

Comments/Influences

Class: RESIDENTIAL-VACANT Zoning:

School: MANTON CONSOLIDATED SCHOOLS

P.R.E. 100% / /

:

2024 Est TCV 61,584

Building Permit(s)	Date	Number	Status

	Improved	X	Vacant

	Public Improvements
X	Dirt Road
X	Gravel Road
	Paved Road
	Storm Sewer
	Sidewalk
	Water
	Sewer
X	Electric
	Gas
	Curb
	Street Lights
	Standard Utilities
	Underground Utils.

	Topography of Site
	Level
X	Rolling
X	Low
X	High
	Landscaped
	Swamp
X	Wooded
	Pond
	Waterfront
	Ravine
	Wetland
	Flood Plain
X	OPEN/PINES

Who	When	What
GLA	05/11/2020	INSPECTION
GLA	07/10/2019	INSPECTION
GLA	07/10/2019	INSPECTION

Land Value Estimates for Land Table 4010.LAND VALUES

Description	Frontage	Depth	* Factors * Front	Depth	Rate	%Adj.	Reason	Value
ACREAGE			19.245 Acres		3,200	100		61,584
ROW			0.755 Acres		0	100		0
			20.00 Total Acres		Total Est. Land Value =			61,584

Year	Land Value	Building Value	Assessed Value	Board of Review	Tribunal/ Other	Taxable Value
2024	30,800	0	30,800			11,811C
2023	25,000	0	25,000			11,249C
2022	21,300	0	21,300			10,714C
2021	19,700	0	19,700			10,372C

The Equalizer. Copyright (c) 1999 - 2009. Licensed To: Township of Greenwood, County of Wexford, Michigan

*** Information herein deemed reliable but not guaranteed***

Parcel Number: 2410-34-1104 Jurisdiction: GREENWOOD TWP County: WEXFORD Printed on 02/15/2024

Grantor	Grantee	Sale Price	Sale Date	Inst. Type	Terms of Sale	Liber & Page	Verified By	Prcnt. Trans.
AUSTIN, ANDREW D	WOOD, JERAMY J & JACQUELIN	2,000	04/01/2021	QC	22-OUTLIER	689/2274	AGENT	100.0
WEXFORD CO TREASURER	AUSTIN, ANDREW D	1,806	10/03/2006	QC	21-NOT USED/OTHER	593:1028	DEED	0.0

Property Address

3890 E 12 RD

Owner's Name/Address

WOOD, JERAMY J & JACQUELINE V
3880 E 12 RD
MANTON MI 49663

Tax Description

PAR COM 287.32 FT W OF NE COR OF SEC: TH S 204.28 FT; W 215.37 FT; N 204.28 FT; E TO POB. --1 A. M/L-- GW. SEC. 34 T24N R10W -MANTON-

Comments/Influences

Class: RESIDENTIAL-VACANT Zoning:

School: MANTON CONSOLIDATED SCHOOLS

P.R.E. 0%

:

2024 Est TCV 9,201

	Improved	X	Vacant

	Public Improvements
X	Dirt Road
X	Gravel Road
	Paved Road
	Storm Sewer
	Sidewalk
	Water
	Sewer
X	Electric
	Gas
	Curb
	Street Lights
	Standard Utilities
	Underground Utils.

	Topography of Site
	Level
X	Rolling
	Low
X	High
	Landscaped
	Swamp
X	Wooded
	Pond
	Waterfront
	Ravine
	Wetland
	Flood Plain
X	OPEN

Who	When	What
GLA	05/11/2020	INSPECTION
GLA	07/10/2019	INSPECTION
GLA	07/10/2019	INSPECTION

Building Permit(s)	Date	Number	Status
RESIDENTIAL - REMODEL	03/08/2000	PE12759	

Land Value Estimates for Land Table 4010.LAND VALUES

Description	Frontage	Depth	* Factors * Front	Depth	Rate	%Adj.	Reason	Value
ACREAGE			0.840 Acres		10,953	100		9,201
ROW			0.160 Acres		0	100		0
			1.00 Total Acres		Total Est. Land Value =			9,201

Year	Land Value	Building Value	Assessed Value	Board of Review	Tribunal/ Other	Taxable Value
2024	4,600	0	4,600			2,315C
2023	2,500	0	2,500			2,205C
2022	2,100	0	2,100			2,100S
2021	2,500	13,000	15,500	2,500M		1,893C

The Equalizer. Copyright (c) 1999 - 2009. Licensed To: Township of Greenwood, County of Wexford, Michigan

*** Information herein deemed reliable but not guaranteed***

Parcel Number: 2410-34-1201 Jurisdiction: GREENWOOD TWP County: WEXFORD Printed on 02/15/2024

Grantor	Grantee	Sale Price	Sale Date	Inst. Type	Terms of Sale	Liber & Page	Verified By	Prcnt. Trans.
AUSTIN, LINDA M	AUSTIN, LINDA M	0	10/25/2019	WD	18-LIFE ESTATE	686 /284	DEED	0.0
DAUSEY, LYMAN	AUSTIN, DAVID F. 9%	46,000	06/01/1985	LC	03-ARM'S LENGTH	0	DEED	0.0

Property Address	Class: RESIDENTIAL-IMPROV	Zoning:	Building Permit(s)	Date	Number	Status
3630 E 12 RD	School: MANTON CONSOLIDATED SCHOOLS		RESIDENTIAL - REMODEL	06/17/2002	PM5953	
	P.R.E. 100% / /		RESIDENTIAL - NEW	03/14/2002	PM5770	
Owner's Name/Address	:		RESIDENTIAL - NEW	03/14/2002	PP2521	
AUSTIN, LINDA M 3630 E 12 RD MANTON MI 49663	2024 Est TCV 375,103 TCV/TFA: 227.06		RESIDENTIAL - NEW	11/29/2001	PE14153	

X Improved | Vacant

Land Value Estimates for Land Table 4010.LAND VALUES

Tax Description

E 1/2 OF W 1/2 OF NE /4 40 A/ GW. SEC. 34 T24N R10W -MANTON-

Comments/Influences

The Equalizer. Copyright (c) 1999 - 2009. Licensed To: Township of Greenwood, County of Wexford, Michigan

Public Improvements

	Dirt Road
X	Gravel Road
	Paved Road
	Storm Sewer
	Sidewalk
	Water
	Sewer
X	Electric
	Gas
	Curb
	Street Lights
	Standard Utilities
	Underground Utils.

Topography of Site

	Level
X	Rolling
X	Low
X	High
	Landscaped
	Swamp
X	Wooded
	Pond
	Waterfront
	Ravine
	Wetland
	Flood Plain
X	OPEN

Who	When	What
GLA	05/11/2020	INSPECTION
GLA	07/10/2019	INSPECTION
GLA	07/10/2019	INSPECTION

* Factors *

Description	Frontage	Depth	Front	Depth	Rate	%Adj.	Reason	Value
ACREAGE			39.510	Acres	2,722	100		107,546
ROW			0.490	Acres	0	100		0
			40.00	Total Acres			Total Est. Land Value =	107,546

Land Improvement Cost Estimates

Description	Rate	Size	% Good	Cash Value
D/W/P: 4in Concrete	6.11	733	45	2,016
D/W/P: 4in Concrete	6.11	40	26	63
Total Estimated Land Improvements True Cash Value =				2,079

Year	Land Value	Building Value	Assessed Value	Board of Review	Tribunal/ Other	Taxable Value
2024	53,800	133,800	187,600			61,367C
2023	47,500	110,200	157,700			58,445C
2022	37,700	93,600	131,300			55,662C
2021	33,700	95,700	129,400			53,884C

*** Information herein deemed reliable but not guaranteed***

Building Type

X	Single Family
	Mobile Home
	Town Home
	Duplex
	A-Frame
	Wood Frame
X	Block

Building Style: PLAIN

Yr Built	Remodeled
0	0

Condition: Good

Room List

	Basement
	1st Floor
	2nd Floor
	Bedrooms

(1) Exterior

	Wood/Shingle
	Aluminum/Vinyl
	Brick
X	Block
X	Insulation

(2) Windows

	Many		Large
X	Avg.	X	Avg.
	Few		Small

X	Wood Sash
	Metal Sash
	Vinyl Sash
	Double Hung
	Horiz. Slide
	Casement
	Double Glass
	Patio Doors
X	Storms & Screens

(3) Roof

X	Gable		Gambrel
	Hip		Mansard
	Flat		Shed

X	Asphalt Shingle

Chimney:

(3) Roof (cont.)

	Eavestrough
X	Insulation
0	Front Overhang
0	Other Overhang

(4) Interior

X	Drywall		Plaster
	Paneled		Wood T&G

Trim & Decoration

	Ex	X	Ord		Min

Size of Closets

	Lg	X	Ord		Small

Doors:		Solid	X	H.C.	

(5) Floors

Kitchen:
Other: Linoleum
Other: Carpeted

(6) Ceilings

X	Drywall

(7) Excavation

Basement: 952 S.F.
Crawl: 0 S.F.
Slab: 0 S.F.
Height to Joists: 0.0

(8) Basement

	Conc. Block
	Poured Conc.
	Stone
	Treated Wood
	Concrete Floor

(9) Basement Finish

	Recreation	SF
	Living	SF
1	Walkout Doors	(B)
	No Floor	SF
	Walkout Doors	(A)

(10) Floor Support

Joists:
Unsupported Len:
Cntr.Sup:

(11) Heating/Cooling

X	Gas		Oil		Elec.
	Wood		Coal		Steam

	Forced Air w/o Ducts
X	Forced Air w/ Ducts
	Forced Hot Water
	Electric Baseboard
	Elec. Ceil. Radiant
	Radiant (in-floor)
	Electric Wall Heat
	Space Heater
	Wall/Floor Furnace
	Forced Heat & Cool
	Heat Pump
	No Heating/Cooling

	Central Air
	Wood Furnace

(12) Electric

150	Amps Service

No./Qual. of Fixtures

	Ex.	X	Ord.		Min

No. of Elec. Outlets

	Many	X	Ave.		Few

(13) Plumbing

	Average Fixture(s)
1	3 Fixture Bath
	2 Fixture Bath
	Softener, Auto
	Softener, Manual
	Solar Water Heat
	No Plumbing
	Extra Toilet
	Extra Sink
	Separate Shower
	Ceramic Tile Floor
	Ceramic Tile Wains
	Ceramic Tub Alcove
	Vent Fan

(14) Water/Sewer

	Public Water
	Public Sewer
1	Water Well
1	1000 Gal Septic
	2000 Gal Septic

Lump Sum Items:

(15) Built-ins

	Appliance Allow.
	Cook Top
	Dishwasher
	Garbage Disposal
	Bath Heater
	Vent Fan
	Hot Tub
	Unvented Hood
	Vented Hood
	Intercom
	Jacuzzi Tub
	Jacuzzi repl.Tub
	Oven
	Microwave
	Standard Range
	Self Clean Range
	Sauna
	Trash Compactor
	Central Vacuum
	Security System

(15) Fireplaces

	Interior 1 Story
	Interior 2 Story
	2nd/Same Stack
	Two Sided
1	Exterior 1 Story
	Exterior 2 Story
	Prefab 1 Story
	Prefab 2 Story
	Heat Circulator
	Raised Hearth
	Wood Stove
	Direct-Vented Gas

Class: CD
Effec. Age: 49
Floor Area: 1,652
Total Base New : 333,881 E.C.F.
Total Depr Cost: 170,281 X 1.297
Estimated T.C.V: 220,854

(16) Porches/Decks

Area	Type
426	CCP (1 Story)
221	CCP (1 Story)
240	WGEP (1 Story)
544	WCP (1 Story)

(17) Garage

Year Built:
Car Capacity:
Class: D
Exterior: Siding
Brick Ven.: 0
Stone Ven.: 0
Common Wall: Detache
Foundation: 18 Inch
Finished ?:
Auto. Doors: 0
Mech. Doors: 0
Area: 1248
% Good: 0
Storage Area: 0
No Conc. Floor: 1200

Bsmnt Garage:

Carport Area:
Roof:

Cost Est. for Res. Bldg: 1 Single Family PLAIN Cls CD Blt 0
(11) Heating System: Forced Air w/ Ducts
Ground Area = 952 SF Floor Area = 1652 SF.
Phy/Ab.Phy/Func/Econ/Comb. % Good=51/100/100/100/51
Building Areas

Stories	Exterior	Foundation	Size	Cost New	Depr. Cost
2 Story	Siding	Basement	700		
1 Story	Siding	Basement	252		
			Total:	188,284	96,026
Other Additions/Adjustments					
Basement, Outside Entrance, Below Grade			1	2,176	1,110
Water/Sewer					
1000 Gal Septic			1	4,582	2,337
Water Well, 100 Feet			1	5,680	2,897
Porches					
CCP (1 Story)			426	9,542	4,866
CCP (1 Story)			221	5,262	2,684
WGEP (1 Story)			240	15,778	8,047
WCP (1 Story)			544	15,928	8,123
Garages					
Class: D Exterior: Siding Foundation: 18 Inch (Unfinished)					
Base Cost			768	21,527	10,979
Class: D Exterior: Siding Foundation: 18 Inch (Unfinished)					
Base Cost			896	24,344	12,415
Storage Over Garage			448	4,776	2,436
Class: D Exterior: Siding Foundation: 18 Inch (Unfinished)					
Base Cost			1248	31,986	16,313
No Concrete Floor			1200	-6,732	-3,433
Fireplaces					
Exterior 1 Story			1	5,748	2,931

<<<<< Calculations too long. See Valuation printout for complete pricing. >>>>>

*** Information herein deemed reliable but not guaranteed***

2410-34-1201

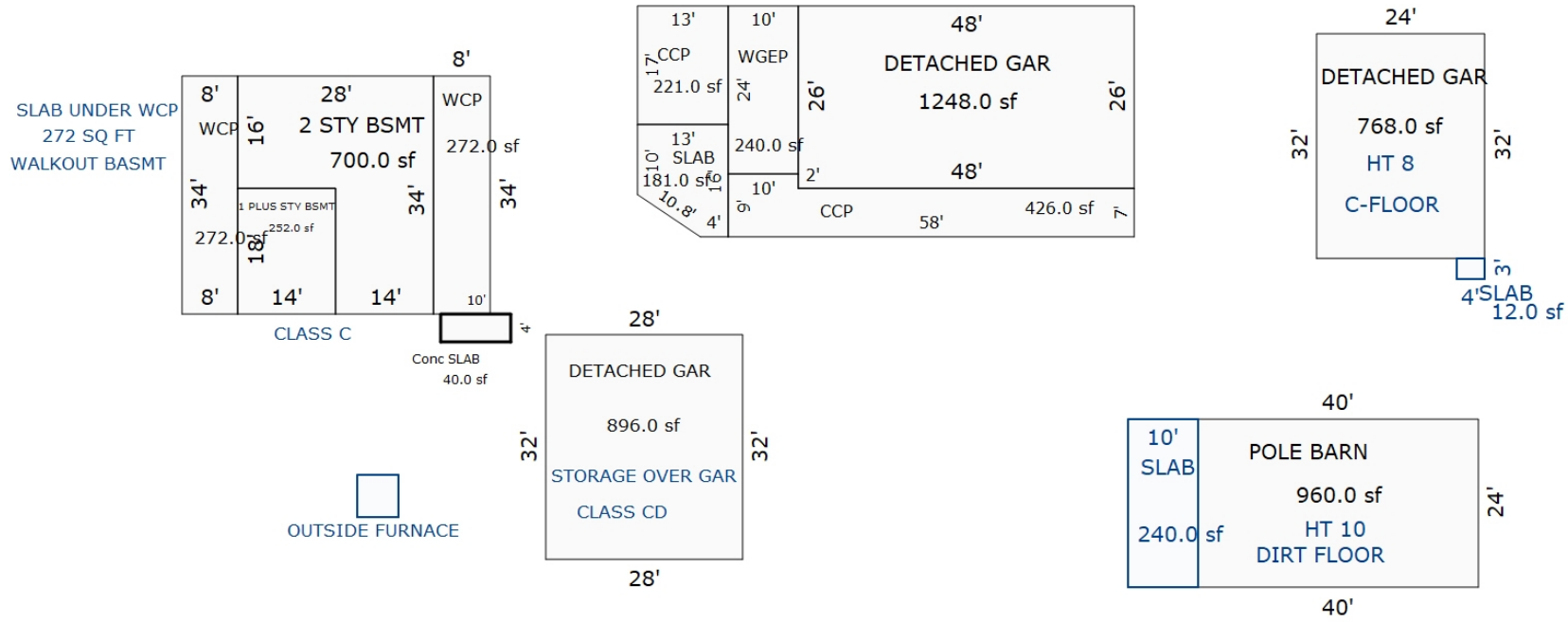

Sketch by Apex Sketch

*** Information herein deemed reliable but not guaranteed***

Building Type

X	Single Family
	Mobile Home
	Town Home
	Duplex
	A-Frame
X	Wood Frame

Building Style: PLAIN

Yr Built	Remodeled
0	0

Condition: Good

Room List

	Basement
	1st Floor
	2nd Floor
	Bedrooms

(1) Exterior

	Wood/Shingle
X	Aluminum/Vinyl
	Brick
X	Insulation

(2) Windows

	Many		Large
X	Avg.	X	Avg.
	Few		Small

	Wood Sash
	Metal Sash
X	Vinyl Sash
	Double Hung
	Horiz. Slide
	Casement
	Double Glass
	Patio Doors
X	Storms & Screens

(3) Roof

X	Gable		Gambrel
	Hip		Mansard
	Flat		Shed

X	Asphalt Shingle

Chimney:

(3) Roof (cont.)

	Eavestrough
X	Insulation
0	Front Overhang
0	Other Overhang

(4) Interior

X	Drywall		Plaster
	Paneled		Wood T&G

Trim & Decoration

	Ex	X	Ord		Min

Size of Closets

	Lg	X	Ord		Small

Doors:		Solid	X	H.C.	

(5) Floors

Kitchen:
Other: Linoleum
Other: Carpeted

(6) Ceilings

X	Drywall

(7) Excavation

Basement: 0 S.F.
Crawl: 0 S.F.
Slab: 0 S.F.
Height to Joists: 0.0

(8) Basement

	Conc. Block
	Poured Conc.
	Stone
	Treated Wood
	Concrete Floor

(9) Basement Finish

	Recreation SF
	Living SF
	Walkout Doors (B)
	No Floor SF
	Walkout Doors (A)

(10) Floor Support

Joists:
Unsupported Len:
Cntr.Sup:

(11) Heating/Cooling

X	Gas		Oil		Elec.
	Wood		Coal		Steam

	Forced Air w/o Ducts
X	Forced Air w/ Ducts
	Forced Hot Water
	Electric Baseboard
	Elec. Ceil. Radiant
	Radiant (in-floor)
	Electric Wall Heat
	Space Heater
	Wall/Floor Furnace
	Forced Heat & Cool
	Heat Pump
	No Heating/Cooling

	Central Air
	Wood Furnace

(12) Electric

150	Amps Service

No./Qual. of Fixtures

	Ex.	X	Ord.		Min

No. of Elec. Outlets

	Many	X	Ave.		Few

(13) Plumbing

1	Average Fixture(s)
	3 Fixture Bath
	2 Fixture Bath
	Softener, Auto
	Softener, Manual
	Solar Water Heat
	No Plumbing
	Extra Toilet
	Extra Sink
	Separate Shower
	Ceramic Tile Floor
	Ceramic Tile Wains
	Ceramic Tub Alcove
	Vent Fan

(14) Water/Sewer

	Public Water
	Public Sewer
	Water Well
	1000 Gal Septic
	2000 Gal Septic

Lump Sum Items:

(15) Built-ins

	Appliance Allow.
	Cook Top
	Dishwasher
	Garbage Disposal
	Bath Heater
	Vent Fan
	Hot Tub
	Unvented Hood
	Vented Hood
	Intercom
	Jacuzzi Tub
	Jacuzzi repl.Tub
	Oven
	Microwave
	Standard Range
	Self Clean Range
	Sauna
	Trash Compactor
	Central Vacuum
	Security System

(15) Fireplaces

	Interior 1 Story
	Interior 2 Story
	2nd/Same Stack
	Two Sided
	Exterior 1 Story
	Exterior 2 Story
	Prefab 1 Story
	Prefab 2 Story
	Heat Circulator
	Raised Hearth
	Wood Stove
	Direct-Vented Gas

Class: CD
Effec. Age: 20
Floor Area: 0
Total Base New : 36,283 E.C.F.
Total Depr Cost: 29,027 X 1.297
Estimated T.C.V: 37,648

(16) Porches/Decks

Area	Type
240	CGEP (2 Story)

(17) Garage

Year Built:
Car Capacity:
Class: CD
Exterior: Pole
Brick Ven.: 0
Stone Ven.: 0
Common Wall: Detache
Foundation: 18 Inch
Finished ?:
Auto. Doors: 0
Mech. Doors: 0
Area: 960
% Good: 0
Storage Area: 0
No Conc. Floor: 960

Bsmnt Garage:

Carport Area:
Roof:

Cost Est. for Res. Bldg: 2 Single Family PLAIN Cls CD Blt 0
(11) Heating System: Forced Air w/ Ducts
Ground Area = 0 SF Floor Area = 0 SF.
Phy/Ab.Phy/Func/Econ/Comb. % Good=80/100/100/100/80
Building Areas

Stories Exterior Foundation	Size	Cost New	Depr. Cost
Other Additions/Adjustments			
Porches			
CGEP (2 Story)	240	20,280	16,224
Garages			
Class: CD Exterior: Pole (Unfinished)			
Base Cost	960	21,907	17,526
No Concrete Floor	960	-5,904	-4,723
Totals:		36,283	29,027

Notes:
ECF (RESIDENTIAL) 1.297 => TCV: 37,648

*** Information herein deemed reliable but not guaranteed***

Building Type	Barn - Free-Stall				
Year Built					
Class/Construction	D,Pole				
Quality/Exterior	Cheap				
# of Walls, Perimeter	4 Wall, 148				
Height	10				
Heating System	No Heating/Cooling				
Length/Width/Area	40 x 24 = 960				
Cost New	$ 11,894				
Phy./Func./Econ. %Good	62/100/100 62.0				
Depreciated Cost	$ 7,374				
+ Unit-In-Place Items	$ 0				
Description, Size X Rate X %Good = Cost Itemized -> Unit-In-Place -> Items ->					
E.C.F.	X 0.946				
% Good	62				
Est. True Cash Value	$ 6,976				
Comments:					
Total Estimated True Cash Value of Agricultural Improvements / This Card: 6976 / All Cards: 6976					

*** Information herein deemed reliable but not guaranteed***

Parcel Number: 2410-34-1202 Jurisdiction: GREENWOOD TWP County: WEXFORD Printed on 02/15/2024

Grantor	Grantee	Sale Price	Sale Date	Inst. Type	Terms of Sale	Liber & Page	Verified By	Prcnt. Trans.
AUSTIN, LINDA M	AUSTIN, LINDA M	0	10/25/2019	WD	18-LIFE ESTATE	686/284	DEED	0.0
REININK, MARVIN C.	AUSTIN, DAVID F.	20,000	10/16/1986	WD	03-ARM'S LENGTH	303:893	DEED	0.0

Property Address

Owner's Name/Address

AUSTIN, LINDA M
3630 E 12 RD
MANTON MI 49663

Tax Description

W 1/2 OF W 1/2 OF NE 1/4 40 A. GW. SEC. 34 T24N R10W -MANTON-

Comments/Influences

The Equalizer. Copyright (c) 1999 - 2009. Licensed To: Township of Greenwood, County of Wexford, Michigan

Class: RESIDENTIAL-VACANT Zoning:

School: MANTON CONSOLIDATED SCHOOLS

P.R.E. 100% / /

:

2024 Est TCV 107,519

Building Permit(s)	Date	Number	Status

	Improved	X	Vacant

	Public Improvements
X	Dirt Road
X	Gravel Road
	Paved Road
	Storm Sewer
	Sidewalk
	Water
	Sewer
X	Electric
	Gas
	Curb
	Street Lights
	Standard Utilities
	Underground Utils.

	Topography of Site
	Level
X	Rolling
	Low
	High
	Landscaped
	Swamp
X	Wooded
	Pond
	Waterfront
	Ravine
	Wetland
	Flood Plain
X	OPEN/PINES

Who	When	What
GLA	05/11/2020	INSPECTION
GLA	07/10/2019	INSPECTION
GLA	07/10/2019	INSPECTION

Land Value Estimates for Land Table 4010.LAND VALUES

Description	Frontage	Depth	* Factors * Front	Depth	Rate	%Adj.	Reason	Value
ACREAGE			39.500 Acres		2,722	100		107,519
ROW			0.500 Acres		0	100		0
			40.00 Total Acres		Total Est. Land Value =			107,519

Year	Land Value	Building Value	Assessed Value	Board of Review	Tribunal/ Other	Taxable Value
2024	53,800	0	53,800			16,327C
2023	47,500	0	47,500			15,550C
2022	37,700	0	37,700			14,810C
2021	33,700	0	33,700			14,337C

*** Information herein deemed reliable but not guaranteed***

Parcel Number: 2410-34-1401 Jurisdiction: GREENWOOD TWP County: WEXFORD Printed on 02/15/2024

Grantor	Grantee	Sale Price	Sale Date	Inst. Type	Terms of Sale	Liber & Page	Verified By	Prcnt. Trans.

Property Address

Owner's Name/Address

WEXFORD COUNTY ROAD
COMMISSION
P.O. BOX 34
BOON MI 49618-0034

Tax Description

S 3/4 OF SE 1/4 OF NE 1/4 30 A. GW. SEC. 34 T24N R10W -MANTON-

Comments/Influences

The Equalizer. Copyright (c) 1999 - 2009. Licensed To: Township of Greenwood, County of Wexford, Michigan

Class: COMMERCIAL-VACANT Zoning:

School: MANTON CONSOLIDATED SCHOOLS

P.R.E. 0%

:

2024 Est TCV 0

Building Permit(s)	Date	Number	Status

	Improved	X	Vacant

	Public Improvements
	Dirt Road
	Gravel Road
X	Paved Road
	Storm Sewer
	Sidewalk
	Water
	Sewer
X	Electric
	Gas
	Curb
	Street Lights
	Standard Utilities
	Underground Utils.

	Topography of Site
	Level
X	Rolling
	Low
X	High
	Landscaped
	Swamp
X	Wooded
	Pond
	Waterfront
	Ravine
	Wetland
	Flood Plain
X	OPEN/PINES

Who	When	What
GLA	07/10/2019	INSPECTION
GLA	07/10/2019	INSPECTION

Land Value Estimates for Land Table 4010.LAND VALUES

Description	Frontage	Depth	* Factors * Front	Depth	Rate	%Adj.	Reason	Value
ACREAGE			29.250 Acres		2,722	100		79,619
			0.750 Acres		0	100		0
			30.00 Total Acres		Total Est. Land Value =			79,619

Year	Land Value	Building Value	Assessed Value	Board of Review	Tribunal/ Other	Taxable Value
2024	EXEMPT	EXEMPT	EXEMPT			EXEMPT
2023	EXEMPT	EXEMPT	EXEMPT			EXEMPT
2022	0	0	0			0
2021	0	0	0			0

*** Information herein deemed reliable but not guaranteed***

Parcel Number: 2410-34-2101 Jurisdiction: GREENWOOD TWP County: WEXFORD Printed on 02/15/2024

Grantor	Grantee	Sale Price	Sale Date	Inst. Type	Terms of Sale	Liber & Page	Verified By	Prcnt. Trans.

Property Address	Class: AGRICULTURAL-VACAN	Zoning:	Building Permit(s)	Date	Number	Status
	School: MANTON CONSOLIDATED SCHOOLS					
Owner's Name/Address	P.R.E. 0%					
	:					
STATE OF MICHIGAN P O BOX 30735 GRANTS ADMINISTRATION LANSING MI 48909-8235	2024 Est TCV 0					

Improved | X | Vacant

Land Value Estimates for Land Table 4010.LAND VALUES

Description	Frontage	Depth	* Factors * Front	Depth	Rate	%Adj.	Reason	Value
ACREAGE			79.000 Acres		2,544	100		201,002
			1.000 Acres		0	100		0
			80.00 Total Acres		Total Est. Land Value =			201,002

Tax Description

E 1/2 OF NW 1/4 80 A. GW. SEC. 34 T24N R10W -MANTON-

Comments/Influences

	Public Improvements
	Dirt Road
X	Gravel Road
	Paved Road
	Storm Sewer
	Sidewalk
	Water
	Sewer
X	Electric
	Gas
	Curb
	Street Lights
	Standard Utilities
	Underground Utils.

	Topography of Site
	Level
X	Rolling
X	Low
	High
	Landscaped
	Swamp
X	Wooded
	Pond
	Waterfront
	Ravine
	Wetland
	Flood Plain
X	OPEN/PINES

Who	When	What
GLA	05/11/2020	INSPECTION
GLA	07/10/2019	INSPECTION
GLA	07/10/2019	INSPECTION

Year	Land Value	Building Value	Assessed Value	Board of Review	Tribunal/ Other	Taxable Value
2024	EXEMPT	EXEMPT	EXEMPT			EXEMPT
2023	EXEMPT	EXEMPT	EXEMPT			EXEMPT
2022	0	0	0			0
2021	0	0	0			0

The Equalizer. Copyright (c) 1999 - 2009.
Licensed To: Township of Greenwood, County of Wexford, Michigan

*** Information herein deemed reliable but not guaranteed***

Parcel Number: 2410-34-2201 Jurisdiction: GREENWOOD TWP County: WEXFORD Printed on 02/15/2024

Grantor	Grantee	Sale Price	Sale Date	Inst. Type	Terms of Sale	Liber & Page	Verified By	Prcnt. Trans.
STEWART, DONALD G.	STEWART, R DENNISION TRUST	100	04/15/2023	OTH	14-INTO/OUT OF TRUST	PTA	DEED	0.0
STEWART, DONALD G.	STEWART, DONALD G TRUST	0	03/14/2007	QC	09-FAMILY	598:1186	DEED	0.0

Property Address

Owner's Name/Address

STEWART, R DENNISION TRUST
STEWART, DONALD G.
1515 FIRE THORN LAKES DR
SARASOTA FL 34240

Tax Description

NW 1/4 OF NW 1/4 40 A. GW. SEC. 34 T24N R10W -MANTON- (COMMERCIAL FOREST '82)

Comments/Influences

The Equalizer. Copyright (c) 1999 - 2009. Licensed To: Township of Greenwood, County of Wexford, Michigan

Class: RESIDENTIAL-VACANT Zoning:

School: MANTON CONSOLIDATED SCHOOLS

P.R.E. 0%

:

2024 Est TCV 0

Building Permit(s)	Date	Number	Status

[ ] Improved [X] Vacant

Land Value Estimates for Land Table 4010.LAND VALUES

Description	Frontage	Depth	* Factors * Front	Depth	Rate	%Adj.	Reason	Value
ACREAGE			38.000 Acres		2,722	100		103,436
ROW			2.000 Acres		0	100		0
			40.00 Total Acres		Total Est. Land Value =			103,436

Public Improvements

	Dirt Road
X	Gravel Road
	Paved Road
	Storm Sewer
	Sidewalk
	Water
	Sewer
X	Electric
	Gas
	Curb
	Street Lights
	Standard Utilities
	Underground Utils.

Topography of Site

	Level
X	Rolling
X	Low
	High
	Landscaped
	Swamp
X	Wooded
	Pond
	Waterfront
	Ravine
	Wetland
	Flood Plain
X	OPEN/PINES

Who	When	What
GLA	05/11/2020	INSPECTION
GLA	07/10/2019	INSPECTION
GLA	07/10/2019	INSPECTION

Year	Land Value	Building Value	Assessed Value	Board of Review	Tribunal/ Other	Taxable Value
2024	0	0	0			0
2023	0	0	0			0
2022	0	0	0			0
2021	0	0	0			0

*** Information herein deemed reliable but not guaranteed***

Parcel Number: 2410-34-2301 Jurisdiction: GREENWOOD TWP County: WEXFORD Printed on 02/15/2024

Grantor	Grantee	Sale Price	Sale Date	Inst. Type	Terms of Sale	Liber & Page	Verified By	Prcnt. Trans.

Property Address	Class: RESIDENTIAL-IMPROV	Zoning:	Building Permit(s)	Date	Number	Status
6640 N 31 RD	School: MANTON CONSOLIDATED SCHOOLS		RESIDENTIAL - REMODEL	11/29/2001	PM5557	
	P.R.E. 100% / /					
Owner's Name/Address	:					
HOWE, STANLEY & MARYANNE 6640 N 31 RD MANTON MI 49663	2024 Est TCV 263,276 TCV/TFA: 180.33					

Tax Description

SW 1/4 OF NW 1/4 EXC N 190 FT OF W 454 FT & EXC S 300 FT OF W 288 FT THEREOF --36.04 A. M/L-- GW. SEC. 34 T24N R10W -MANTON-

Comments/Influences

The Equalizer. Copyright (c) 1999 - 2009. Licensed To: Township of Greenwood, County of Wexford, Michigan

X	Improved	
	Vacant	

	Public Improvements
	Dirt Road
X	Gravel Road
	Paved Road
	Storm Sewer
	Sidewalk
	Water
	Sewer
X	Electric
	Gas
	Curb
	Street Lights
	Standard Utilities
	Underground Utils.

	Topography of Site
	Level
X	Rolling
	Low
X	High
	Landscaped
	Swamp
X	Wooded
	Pond
	Waterfront
	Ravine
	Wetland
	Flood Plain
X	OPEN/PINES

Who	When	What
GLA	05/11/2020	INSPECTION
GLA	07/10/2019	INSPECTION
GLA	07/10/2019	INSPECTION

Land Value Estimates for Land Table 4010.LAND VALUES

Description	Frontage	Depth	* Factors * Front	Depth	Rate	%Adj.	Reason	Value
ACREAGE			34.470 Acres		2,722	100		93,827
ROW			0.620 Acres		0	100		0
			35.09 Total Acres		Total Est. Land Value =			93,827

Land Improvement Cost Estimates

Description	Rate	Size	% Good	Cash Value
D/W/P: Asphalt Paving	2.71	442	16	192
D/W/P: 3.5 Concrete	5.82	438	16	408
Wood Frame/Conc.	28.84	100	56	1,615
Total Estimated Land Improvements True Cash Value =				2,215

Year	Land Value	Building Value	Assessed Value	Board of Review	Tribunal/ Other	Taxable Value
2024	46,900	84,700	131,600			48,125C
2023	42,200	68,600	110,800			45,834C
2022	34,400	57,400	91,800			43,652C
2021	30,100	57,500	87,600			42,258C

*** Information herein deemed reliable but not guaranteed***

Building Type

X	Single Family
	Mobile Home
	Town Home
	Duplex
	A-Frame
X	Wood Frame

Building Style: PLAIN

Yr Built	Remodeled
0	0

Condition: Poor

Room List

	Basement
	1st Floor
	2nd Floor
	Bedrooms

(1) Exterior

	Wood/Shingle
X	Aluminum/Vinyl
	Brick
X	Insulation

(2) Windows

	Many		Large
X	Avg.	X	Avg.
	Few		Small

X	Wood Sash
	Metal Sash
X	Vinyl Sash
	Double Hung
	Horiz. Slide
	Casement
	Double Glass
	Patio Doors
X	Storms & Screens

(3) Roof

X	Gable		Gambrel
	Hip		Mansard
	Flat		Shed

X	Asphalt Shingle

Chimney:

(3) Roof (cont.)

	Eavestrough
X	Insulation
0	Front Overhang
0	Other Overhang

(4) Interior

X	Drywall		Plaster
	Paneled		Wood T&G

Trim & Decoration

	Ex	X	Ord		Min

Size of Closets

	Lg	X	Ord		Small

Doors:		Solid	X	H.C.	

(5) Floors

Kitchen:
Other: Linoleum
Other: Carpeted

(6) Ceilings

X	Drywall

(7) Excavation

Basement: 884 S.F.
Crawl: 0 S.F.
Slab: 576 S.F.
Height to Joists: 0.0

(8) Basement

	Conc. Block
	Poured Conc.
	Stone
	Treated Wood
	Concrete Floor

(9) Basement Finish

	Recreation	SF
720	Living	SF
	Walkout Doors (B)	
	No Floor	SF
	Walkout Doors (A)	

(10) Floor Support

Joists:
Unsupported Len:
Cntr.Sup:

(11) Heating/Cooling

X	Gas		Oil		Elec.
	Wood		Coal		Steam

	Forced Air w/o Ducts
X	Forced Air w/ Ducts
	Forced Hot Water
	Electric Baseboard
	Elec. Ceil. Radiant
	Radiant (in-floor)
	Electric Wall Heat
	Space Heater
	Wall/Floor Furnace
	Forced Heat & Cool
	Heat Pump
	No Heating/Cooling

	Central Air
	Wood Furnace

(12) Electric

150	Amps Service

No./Qual. of Fixtures

	Ex.	X	Ord.		Min

No. of Elec. Outlets

	Many	X	Ave.		Few

(13) Plumbing

	Average Fixture(s)
1	3 Fixture Bath
	2 Fixture Bath
	Softener, Auto
	Softener, Manual
	Solar Water Heat
	No Plumbing
	Extra Toilet
	Extra Sink
	Separate Shower
	Ceramic Tile Floor
	Ceramic Tile Wains
	Ceramic Tub Alcove
	Vent Fan

(14) Water/Sewer

	Public Water
	Public Sewer
1	Water Well
1	1000 Gal Septic
	2000 Gal Septic

Lump Sum Items:

(15) Built-ins

	Appliance Allow.
	Cook Top
	Dishwasher
	Garbage Disposal
	Bath Heater
	Vent Fan
	Hot Tub
	Unvented Hood
	Vented Hood
	Intercom
	Jacuzzi Tub
	Jacuzzi repl.Tub
	Oven
	Microwave
	Standard Range
	Self Clean Range
	Sauna
	Trash Compactor
	Central Vacuum
	Security System

(15) Fireplaces

	Interior 1 Story
	Interior 2 Story
	2nd/Same Stack
	Two Sided
1	Exterior 1 Story
	Exterior 2 Story
	Prefab 1 Story
	Prefab 2 Story
	Heat Circulator
	Raised Hearth
	Wood Stove
	Direct-Vented Gas

Class: CD
Effec. Age: 59
Floor Area: 1,460
Total Base New : 288,683 E.C.F.
Total Depr Cost: 128,939 X 1.297
Estimated T.C.V: 167,234

(16) Porches/Decks

Area	Type
168	WSEP (1 Story)
325	WCP (1 Story)
90	Treated Wood
126	Brzwy, FW

(17) Garage

Year Built:
Car Capacity:
Class: CD
Exterior: Siding
Brick Ven.: 0
Stone Ven.: 0
Common Wall: Detache
Foundation: 42 Inch
Finished ?:
Auto. Doors: 0
Mech. Doors: 0
Area: 1176
% Good: 0
Storage Area: 0
No Conc. Floor: 0

Bsmnt Garage:

Carport Area:
Roof:

Cost Est. for Res. Bldg: 1 Single Family PLAIN Cls CD Blt 0
(11) Heating System: Forced Air w/ Ducts
Ground Area = 1460 SF Floor Area = 1460 SF.
Phy/Ab.Phy/Func/Econ/Comb. % Good=45/100/100/100/45
Building Areas

Stories	Exterior	Foundation	Size	Cost New	Depr. Cost
1 Story	Siding	Basement	884		
1 Story	Siding	Slab	576		
			Total:	178,577	80,359
Other Additions/Adjustments					
Basement Living Area			720	24,242	9,939
Water/Sewer					
1000 Gal Septic			1	4,582	2,062
Water Well, 100 Feet			1	5,680	2,556
Porches					
WSEP (1 Story)			168	8,022	3,610
WCP (1 Story)			325	9,568	4,306
Deck					
Treated Wood			90	2,382	1,072
Fireplaces					
Exterior 1 Story			1	5,748	2,587
Breezeways					
Frame Wall			126	7,608	3,424
Garages					
Class: CD Exterior: Siding Foundation: 42 Inch (Unfinished)					
Base Cost			1176	37,926	17,067
Local Cost Items					
SHED			201	1,568	706
FREE STANDING ROOF			384	2,780	1,251
			Totals:	288,683	128,939

<<<<< Calculations too long. See Valuation printout for complete pricing. >>>>>

*** Information herein deemed reliable but not guaranteed***

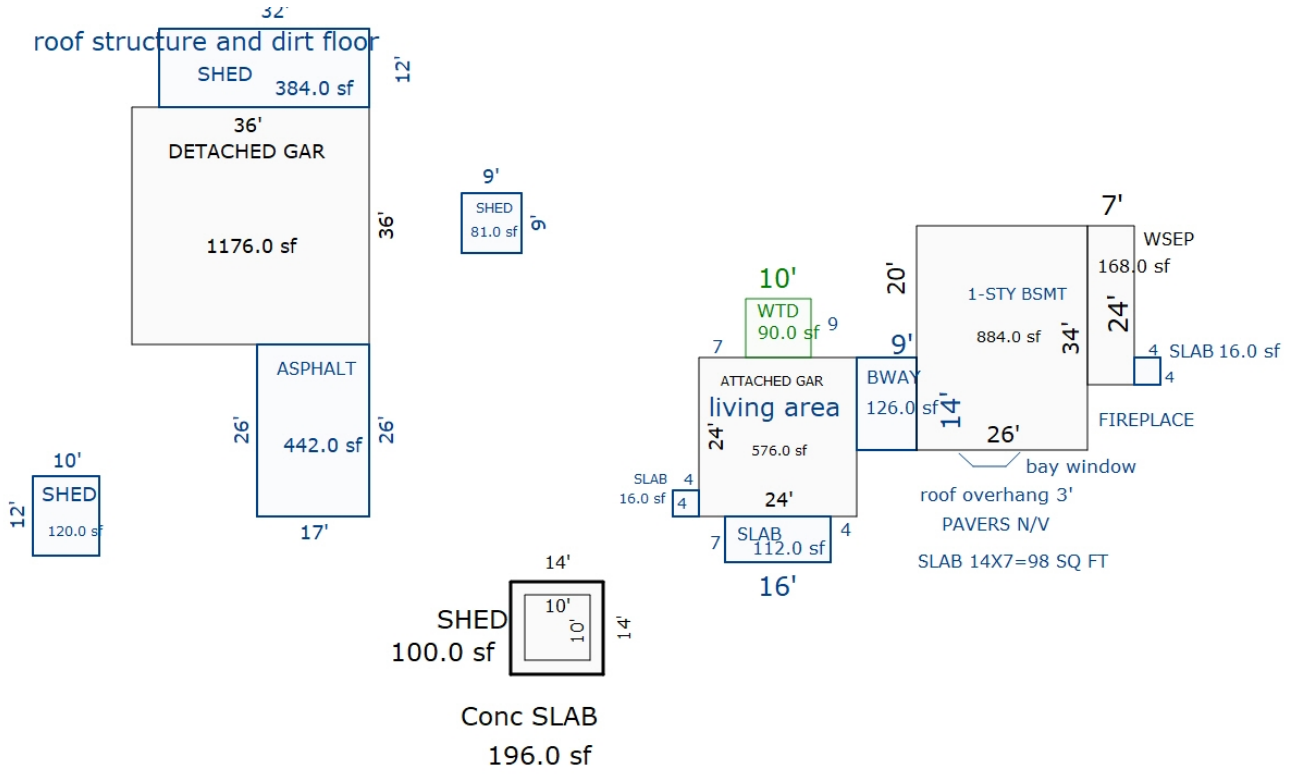

Sketch by Apex Sketch

*** Information herein deemed reliable but not guaranteed***

Parcel Number: 2410-34-2302 Jurisdiction: GREENWOOD TWP County: WEXFORD Printed on 02/15/2024

Grantor	Grantee	Sale Price	Sale Date	Inst. Type	Terms of Sale	Liber & Page	Verified By	Prcnt. Trans.

Property Address

Owner's Name/Address

HOWE, MATTHEW
(ET AL)
6640 N 31 RD
MANTON MI 49663

Tax Description

PAR COM AT SW COR OF SW 1/4 OF NW 1/4: N 300 FT; E 288 FT; S 300 FT; W 288 FT TO POB. --1.98 A. M/L GW. SEC. 34 T24N R10W -MANTON-

Comments/Influences

The Equalizer. Copyright (c) 1999 - 2009. Licensed To: Township of Greenwood, County of Wexford, Michigan

Class: RESIDENTIAL-VACANT Zoning:

School: MANTON CONSOLIDATED SCHOOLS

P.R.E. 0%

:

2024 Est TCV 13,654

	Improved	X	Vacant

	Public Improvements
	Dirt Road
	Gravel Road
X	Paved Road
	Storm Sewer
	Sidewalk
	Water
	Sewer
X	Electric
	Gas
	Curb
	Street Lights
	Standard Utilities
	Underground Utils.

	Topography of Site
	Level
X	Rolling
	Low
X	High
	Landscaped
	Swamp
X	Wooded
	Pond
	Waterfront
	Ravine
	Wetland
	Flood Plain
X	OPEN/PINES

Who	When	What
GLA	05/11/2020	INSPECTION
GLA	07/10/2019	INSPECTION
GLA	07/10/2019	INSPECTION

Building Permit(s)	Date	Number	Status

Land Value Estimates for Land Table 4010.LAND VALUES

Description	Frontage	Depth	* Factors * Front	Depth	Rate	%Adj.	Reason	Value
ACREAGE			1.760 Acres		7,758	100		13,654
ROW			0.220 Acres		0	100		0
			1.98 Total Acres		Total Est. Land Value =			13,654

Year	Land Value	Building Value	Assessed Value	Board of Review	Tribunal/ Other	Taxable Value
2024	6,800	0	6,800			775C
2023	5,000	0	5,000			739C
2022	4,100	0	4,100			704C
2021	4,700	0	4,700			682C

*** Information herein deemed reliable but not guaranteed***

Parcel Number: 2410-34-2303 Jurisdiction: GREENWOOD TWP County: WEXFORD Printed on 02/15/2024

Grantor	Grantee	Sale Price	Sale Date	Inst. Type	Terms of Sale	Liber & Page	Verified By	Prcnt. Trans.
HOWE, STANLEY	DIDYK LAND COMPANY 4 LLC	118,000	08/14/2018	WD	03-ARM'S LENGTH	683 /895	DEED	100.0

Property Address

6730 N 31 RD

Owner's Name/Address

DIDYK LAND COMPANY 4 LLC
6730 N 31 RD
MANTON MI 49663

Tax Description

PAR COM AT NW COR OF SW 1/4 OF NW 1/4: S 190 FT; E 454 FT; N 190 FT; W 454 FT TO POB. --1.98 A.-- GW. SEC. 34 T24N R10W -MANTON-

Comments/Influences

The Equalizer. Copyright (c) 1999 - 2009. Licensed To: Township of Greenwood, County of Wexford, Michigan

Class: RESIDENTIAL-IMPROV Zoning:

School: MANTON CONSOLIDATED SCHOOLS

P.R.E. 0%

:

2024 Est TCV 167,941 TCV/TFA: 161.48

Building Permit(s)	Date	Number	Status

X Improved | Vacant

	Public Improvements
	Dirt Road
	Gravel Road
X	Paved Road
	Storm Sewer
	Sidewalk
	Water
	Sewer
X	Electric
	Gas
	Curb
	Street Lights
	Standard Utilities
	Underground Utils.

	Topography of Site
	Level
X	Rolling
	Low
X	High
	Landscaped
	Swamp
X	Wooded
	Pond
	Waterfront
	Ravine
	Wetland
	Flood Plain
X	OPEN

Who	When	What
GLA	05/11/2020	INSPECTION
GLA	07/10/2019	INSPECTION
GLA	07/10/2019	INSPECTION

Land Value Estimates for Land Table 4010.LAND VALUES

Description	Frontage	Depth	* Factors * Front	Depth	Rate	%Adj.	Reason	Value
HELSEL RIV LOW	190.00	454.00	1.0000	0.0000	315	100*		0
ACREAGE			1.836 Acres		6,995	100		12,843
ROW			0.144 Acres		0	100		0

* denotes lines that do not contribute to the total acreage calculation.

190 Actual Front Feet, 1.98 Total Acres Total Est. Land Value = 12,843

Land Improvement Cost Estimates

Description	Rate	Size	% Good	Cash Value
D/W/P: 3.5 Concrete	6.63	122	45	364
D/W/P: 4in Concrete	7.01	81	36	204
Wood Frame	27.36	140	42	1,609
Total Estimated Land Improvements True Cash Value =				2,177

Year	Land Value	Building Value	Assessed Value	Board of Review	Tribunal/ Other	Taxable Value
2024	6,400	77,600	84,000			58,923C
2023	5,200	63,400	68,600			56,118C
2022	4,300	53,600	57,900			53,446C
2021	4,800	54,100	58,900			51,739C

*** Information herein deemed reliable but not guaranteed***

Building Type

X	Single Family
	Mobile Home
	Town Home
	Duplex
	A-Frame
X	Wood Frame

Building Style: PLAIN

Yr Built	Remodeled
0	0

Condition: Good

Room List

	Basement
	1st Floor
	2nd Floor
	Bedrooms

(1) Exterior

	Wood/Shingle
X	Aluminum/Vinyl
	Brick
X	Insulation

(2) Windows

	Many		Large
X	Avg.	X	Avg.
	Few		Small

	Wood Sash
	Metal Sash
X	Vinyl Sash
	Double Hung
	Horiz. Slide
	Casement
	Double Glass
	Patio Doors
X	Storms & Screens

(3) Roof

X	Gable		Gambrel
	Hip		Mansard
	Flat		Shed

X	Asphalt Shingle

Chimney:

(3) Roof (cont.)

	Eavestrough
X	Insulation
0	Front Overhang
0	Other Overhang

(4) Interior

X	Drywall		Plaster
	Paneled		Wood T&G

Trim & Decoration

	Ex	X	Ord		Min

Size of Closets

	Lg	X	Ord		Small

Doors:		Solid	X	H.C.	

(5) Floors

Kitchen:
Other: Linoleum
Other: Carpeted

(6) Ceilings

X	Drywall

(7) Excavation

Basement: 0 S.F.
Crawl: 1040 S.F.
Slab: 0 S.F.
Height to Joists: 0.0

(8) Basement

	Conc. Block
	Poured Conc.
	Stone
	Treated Wood
	Concrete Floor

(9) Basement Finish

	Recreation SF
	Living SF
	Walkout Doors (B)
	No Floor SF
	Walkout Doors (A)

(10) Floor Support

Joists:
Unsupported Len:
Cntr.Sup:

(11) Heating/Cooling

X	Gas		Oil		Elec.
	Wood		Coal		Steam

	Forced Air w/o Ducts
X	Forced Air w/ Ducts
	Forced Hot Water
	Electric Baseboard
	Elec. Ceil. Radiant
	Radiant (in-floor)
	Electric Wall Heat
	Space Heater
	Wall/Floor Furnace
	Forced Heat & Cool
	Heat Pump
	No Heating/Cooling

	Central Air
	Wood Furnace

(12) Electric

150	Amps Service

No./Qual. of Fixtures

	Ex.	X	Ord.		Min

No. of Elec. Outlets

	Many	X	Ave.		Few

(13) Plumbing

1	Average Fixture(s)
	3 Fixture Bath
	2 Fixture Bath
	Softener, Auto
	Softener, Manual
	Solar Water Heat
	No Plumbing
	Extra Toilet
	Extra Sink
	Separate Shower
	Ceramic Tile Floor
	Ceramic Tile Wains
	Ceramic Tub Alcove
	Vent Fan

(14) Water/Sewer

	Public Water
	Public Sewer
1	Water Well
1	1000 Gal Septic
	2000 Gal Septic

Lump Sum Items:

(15) Built-ins

	Appliance Allow.
	Cook Top
	Dishwasher
	Garbage Disposal
	Bath Heater
	Vent Fan
	Hot Tub
	Unvented Hood
	Vented Hood
	Intercom
	Jacuzzi Tub
	Jacuzzi repl.Tub
	Oven
	Microwave
	Standard Range
	Self Clean Range
	Sauna
	Trash Compactor
	Central Vacuum
	Security System

(15) Fireplaces

	Interior 1 Story
	Interior 2 Story
	2nd/Same Stack
	Two Sided
	Exterior 1 Story
	Exterior 2 Story
	Prefab 1 Story
	Prefab 2 Story
	Heat Circulator
	Raised Hearth
	Wood Stove
	Direct-Vented Gas

Class: C
Effec. Age: 28
Floor Area: 1,040
Total Base New : 163,756 E.C.F.
Total Depr Cost: 117,904 X 1.297
Estimated T.C.V: 152,921

(16) Porches/Decks

Area	Type
132	WGEP (1 Story)
64	Treated Wood

(17) Garage

Year Built:
Car Capacity:
Class:
Exterior:
Brick Ven.:
Stone Ven.:
Common Wall:
Foundation:
Finished ?:
Auto. Doors:
Mech. Doors:
Area:
% Good:
Storage Area:
No Conc. Floor:

Bsmnt Garage:

Carport Area:
Roof:

Cost Est. for Res. Bldg: 1 Single Family PLAIN Cls C Blt 0
(11) Heating System: Forced Air w/ Ducts
Ground Area = 1040 SF Floor Area = 1040 SF.
Phy/Ab.Phy/Func/Econ/Comb. % Good=72/100/100/100/72
Building Areas

Stories	Exterior	Foundation	Size	Cost New	Depr. Cost
1 Story	Siding	Crawl Space	1,040		
			Total:	139,264	100,270
Other Additions/Adjustments					
Water/Sewer					
1000 Gal Septic			1	4,899	3,527
Water Well, 100 Feet			1	5,849	4,211
Porches					
WGEP (1 Story)			132	11,704	8,427
Deck					
Treated Wood			64	2,040	1,469
			Totals:	163,756	117,904

Notes:

ECF (RESIDENTIAL) 1.297 => TCV: 152,921

*** Information herein deemed reliable but not guaranteed***

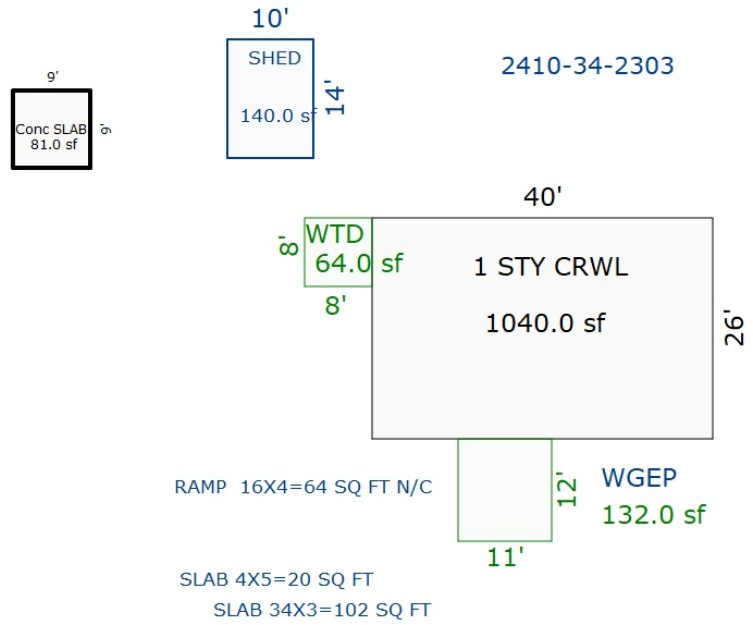

Sketch by Apex Sketch

*** Information herein deemed reliable but not guaranteed***

Parcel Number: 2410-34-3101-02 Jurisdiction: GREENWOOD TWP County: WEXFORD Printed on 02/15/2024

Grantor	Grantee	Sale Price	Sale Date	Inst. Type	Terms of Sale	Liber & Page	Verified By	Prcnt. Trans.
WINDOVER, WESTLEY J	SEYMOUR, BENJAMIN J & JENN	200,000	01/29/2021	WD	03-ARM'S LENGTH	689/349	AGENT	100.0

Property Address

Class: AGRICULTURAL-VACAN Zoning:

School: MANTON CONSOLIDATED SCHOOLS

P.R.E. 100% 03/19/2019 Qual. Ag.

:

2024 Est TCV 212,510

Building Permit(s)	Date	Number	Status

Owner's Name/Address

SEYMOUR, BENJAMIN J & JENNIFER A
122 COCHRANE DR
CADILLAC MI 49601

Improved | X | Vacant

Public Improvements

Dirt Road
Gravel Road
Paved Road
Storm Sewer
Sidewalk
Water
Sewer
Electric
Gas
Curb
Street Lights
Standard Utilities
Underground Utils.

Topography of Site

Level
Rolling
Low
High
Landscaped
Swamp
Wooded
Pond
Waterfront
Ravine
Wetland
Flood Plain

Land Value Estimates for Land Table 1010.AG

Description	Frontage	* Factors * Depth	Front	Depth	Rate	%Adj.	Reason	Value
AG LAND	80 ACRES	79.00 Acres			2690	100		212,510
AG LAND	ROW	1.00 Acres			0	100		0
		80.00 Total Acres			Total Est. Land Value =			212,510

Tax Description

E 1/2 OF SW 1/4 80 AC.
GW. SEC 34 T24N R10W MANTON
COMBINED ON 01/14/2019 FROM
2410-34-3101-01, 2410-34-3103;

Comments/Influences

Split/Comb. on 01/14/2019 completed
01/14/2019 LINDA ;
Parent Parcel(s): 2410-34-3101-01,
2410-34-3103;
Child Parcel(s): 2410-34-3101-02;

Who When What

GLA 05/11/2020 INSPECTION
GLA 07/10/2019 INSPECTION
GLA 07/10/2019 INSPECTION

Year	Land Value	Building Value	Assessed Value	Board of Review	Tribunal/ Other	Taxable Value
2024	106,300	0	106,300			78,387C
2023	79,000	0	79,000			74,655C
2022	71,100	0	71,100			71,100S
2021	67,200	0	67,200			60,840C

The Equalizer. Copyright (c) 1999 - 2009.
Licensed To: Township of Greenwood, County of Wexford, Michigan

*** Information herein deemed reliable but not guaranteed***

Parcel Number: 2410-34-3201 Jurisdiction: GREENWOOD TWP County: WEXFORD Printed on 02/15/2024

Grantor	Grantee	Sale Price	Sale Date	Inst. Type	Terms of Sale	Liber & Page	Verified By	Prcnt. Trans.
HEROD, JAMES W.	SLEIGHT, DONALD D & HEATHE	170,000	12/01/2016	WD	03-ARM'S LENGTH	678 /2865	DEED	100.0

Property Address	Class: RESIDENTIAL-IMPROV	Zoning:	Building Permit(s)	Date	Number	Status
6260 N 31 RD	School: MANTON CONSOLIDATED SCHOOLS					
	P.R.E. 100% 12/14/2016					
Owner's Name/Address	:					
SLEIGHT, DONALD D & HEATHER S 6260 N 31 RD MANTON MI 49663	2024 Est TCV 285,085 TCV/TFA: 221.34					

X Improved | Vacant

Tax Description

NW 1/4 OF SW 1/4 40 A. M/L GW. SEC. 34 T24N R10W -MANTON-

Comments/Influences

	Public Improvements
	Dirt Road
X	Gravel Road
	Paved Road
	Storm Sewer
	Sidewalk
	Water
	Sewer
X	Electric
	Gas
	Curb
	Street Lights
	Standard Utilities
	Underground Utils.

	Topography of Site
	Level
X	Rolling
	Low
X	High
	Landscaped
	Swamp
X	Wooded
	Pond
	Waterfront
	Ravine
	Wetland
	Flood Plain
X	OPEN/PINES

Who	When	What
GLA	05/11/2020	INSPECTION
GLA	07/10/2019	INSPECTION
GLA	07/10/2019	INSPECTION

The Equalizer. Copyright (c) 1999 - 2009.
Licensed To: Township of Greenwood, County of Wexford, Michigan

Land Value Estimates for Land Table 4010.LAND VALUES

Description	Frontage	Depth	* Factors * Front	Depth	Rate	%Adj.	Reason	Value
ACREAGE			39.000 Acres		2,722	100		106,158
ROW			1.000 Acres		0	100		0
			40.00 Total Acres		Total Est. Land Value =			106,158

Land Improvement Cost Estimates

Description	Rate	Size	% Good	Cash Value
D/W/P: 3.5 Concrete	5.82	76	45	199
D/W/P: 4in Concrete	6.11	2952	45	8,117
Total Estimated Land Improvements True Cash Value =				8,316

Year	Land Value	Building Value	Assessed Value	Board of Review	Tribunal/ Other	Taxable Value
2024	53,100	89,400	142,500			100,616C
2023	47,000	73,700	120,700			95,825C
2022	37,400	62,600	100,000			91,262C
2021	33,300	63,200	96,500			88,347C

*** Information herein deemed reliable but not guaranteed***

Building Type

X	Single Family
	Mobile Home
	Town Home
	Duplex
	A-Frame
X	Wood Frame

Building Style: PLAIN

Yr Built	Remodeled
0	0

Condition: Good

Room List

	Basement
	1st Floor
	2nd Floor
	Bedrooms

(1) Exterior

	Wood/Shingle
	Aluminum/Vinyl
	Brick
X	Vinyl
X	Insulation

(2) Windows

X	Many		Large
	Avg.	X	Avg.
	Few		Small

	Wood Sash
	Metal Sash
X	Vinyl Sash
	Double Hung
	Horiz. Slide
	Casement
	Double Glass
	Patio Doors
X	Storms & Screens

(3) Roof

X	Gable		Gambrel
	Hip		Mansard
	Flat		Shed

X	Asphalt Shingle

Chimney:

(3) Roof (cont.)

	Eavestrough
X	Insulation
0	Front Overhang
0	Other Overhang

(4) Interior

X	Drywall		Plaster
	Paneled		Wood T&G

Trim & Decoration

	Ex	X	Ord		Min

Size of Closets

	Lg	X	Ord		Small

Doors:		Solid	X	H.C.	

(5) Floors

Kitchen:
Other: Linoleum
Other: Carpeted

(6) Ceilings

X	Drywall		

(7) Excavation

Basement: 0 S.F.
Crawl: 1288 S.F.
Slab: 0 S.F.
Height to Joists: 0.0

(8) Basement

	Conc. Block
	Poured Conc.
	Stone
	Treated Wood
	Concrete Floor

(9) Basement Finish

	Recreation SF
	Living SF
	Walkout Doors (B)
	No Floor SF
	Walkout Doors (A)

(10) Floor Support

Joists:
Unsupported Len:
Cntr.Sup:

(11) Heating/Cooling

X	Gas		Oil		Elec.
	Wood		Coal		Steam

	Forced Air w/o Ducts
X	Forced Air w/ Ducts
	Forced Hot Water
	Electric Baseboard
	Elec. Ceil. Radiant
	Radiant (in-floor)
	Electric Wall Heat
	Space Heater
	Wall/Floor Furnace
	Forced Heat & Cool
	Heat Pump
	No Heating/Cooling

	Central Air
	Wood Furnace

(12) Electric

150	Amps Service

No./Qual. of Fixtures

	Ex.	X	Ord.		Min

No. of Elec. Outlets

	Many	X	Ave.		Few

(13) Plumbing

	Average Fixture(s)
1	3 Fixture Bath
	2 Fixture Bath
	Softener, Auto
	Softener, Manual
	Solar Water Heat
	No Plumbing
	Extra Toilet
	Extra Sink
	Separate Shower
	Ceramic Tile Floor
	Ceramic Tile Wains
	Ceramic Tub Alcove
	Vent Fan

(14) Water/Sewer

	Public Water
	Public Sewer
1	Water Well
1	1000 Gal Septic
	2000 Gal Septic

Lump Sum Items:

(15) Built-ins

	Appliance Allow.
	Cook Top
	Dishwasher
	Garbage Disposal
	Bath Heater
	Vent Fan
	Hot Tub
	Unvented Hood
	Vented Hood
	Intercom
	Jacuzzi Tub
	Jacuzzi repl.Tub
	Oven
	Microwave
	Standard Range
	Self Clean Range
	Sauna
	Trash Compactor
	Central Vacuum
	Security System

(15) Fireplaces

	Interior 1 Story
	Interior 2 Story
	2nd/Same Stack
	Two Sided
	Exterior 1 Story
	Exterior 2 Story
	Prefab 1 Story
	Prefab 2 Story
	Heat Circulator
	Raised Hearth
	Wood Stove
	Direct-Vented Gas

Class: CD
Effec. Age: 37
Floor Area: 1,288
Total Base New : 208,796 E.C.F.
Total Depr Cost: 131,543 X 1.297
Estimated T.C.V: 170,611

(16) Porches/Decks

Area	Type
96	CCP (1 Story)

(17) Garage

Year Built:
Car Capacity:
Class: CD
Exterior: Siding
Brick Ven.: 0
Stone Ven.: 0
Common Wall: 1 Wall
Foundation: 42 Inch
Finished ?:
Auto. Doors: 0
Mech. Doors: 0
Area: 660
% Good: 0
Storage Area: 0
No Conc. Floor: 0

Bsmnt Garage:

Carport Area:
Roof:

Cost Est. for Res. Bldg: 1 Single Family PLAIN Cls CD Blt 0
(11) Heating System: Forced Air w/ Ducts
Ground Area = 1288 SF Floor Area = 1288 SF.
Phy/Ab.Phy/Func/Econ/Comb. % Good=63/100/100/100/63
Building Areas

Stories	Exterior	Foundation	Size	Cost New	Depr. Cost
1 Story	Siding	Crawl Space	1,288		
			Total:	147,807	93,119
Other Additions/Adjustments					
Water/Sewer					
1000 Gal Septic			1	4,582	2,887
Water Well, 100 Feet			1	5,680	3,578
Porches					
CCP (1 Story)			96	2,498	1,574
Garages					
Class: CD Exterior: Siding Foundation: 42 Inch (Unfinished)					
Base Cost			660	24,658	15,535
Common Wall: 1 Wall			1	-2,529	-1,593
Class: CD Exterior: Pole (Unfinished)					
Base Cost			1200	26,100	16,443
			Totals:	208,796	131,543

Notes:
ECF (RESIDENTIAL) 1.297 => TCV: 170,611

*** Information herein deemed reliable but not guaranteed***

2410-34-3201

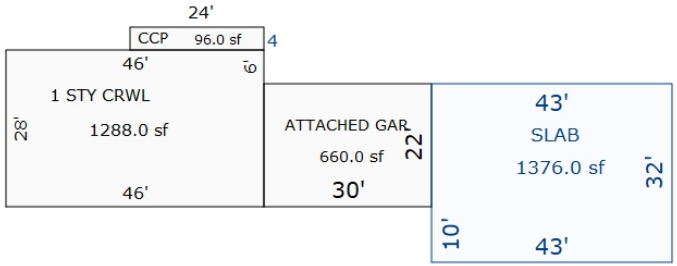

conc driveway....

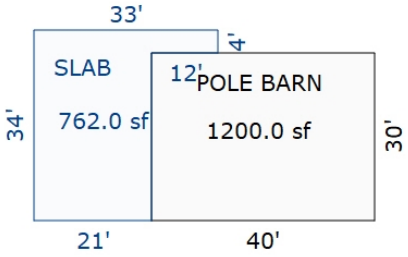

Sketch by Apex Sketch

*** Information herein deemed reliable but not guaranteed***

Parcel Number: 2410-34-3301 Jurisdiction: GREENWOOD TWP County: WEXFORD Printed on 02/15/2024

Grantor	Grantee	Sale Price	Sale Date	Inst. Type	Terms of Sale	Liber & Page	Verified By	Prcnt. Trans.
MILLER, GLENN A.	ELLIOTT, ANTHONY & HANNAH	75,000	03/24/2016	WD	03-ARM'S LENGTH	677 /511	DEED	100.0
MABRY, ROBERT	MILLER, GLENN A.	20,000	06/14/1995	WD	03-ARM'S LENGTH	344:683	DEED	0.0
PERRY, DONALD K.	MABRY, ROBERT	22,000	11/22/1986	LC	03-ARM'S LENGTH	304:257	DEED	0.0

Property Address

6108 N 31 RD

Owner's Name/Address

ELLIOTT, ANTHONY & HANNAH
6108 N 31 RD
MANTON MI 49663

Tax Description

SW 1/4 OF SW 1/4 40 A. GW. SEC. 34 T24N R10W -MANTON-

Comments/Influences

Class: RESIDENTIAL-IMPROV Zoning:

School: MANTON CONSOLIDATED SCHOOLS

P.R.E. 100% 10/28/2016

:

2024 Est TCV 497,905 TCV/TFA: 299.22

Building Permit(s)	Date	Number	Status
RESIDENTIAL - NEW	04/17/2019	PB19-0037	RECHECK
Manufactured home	04/11/2016	PB16-0036	COMPLETE

X Improved | Vacant

	Public Improvements
	Dirt Road
X	Gravel Road
X	Paved Road
	Storm Sewer
	Sidewalk
	Water
	Sewer
X	Electric
	Gas
	Curb
	Street Lights
	Standard Utilities
	Underground Utils.

	Topography of Site
	Level
X	Rolling
X	Low
X	High
	Landscaped
	Swamp
X	Wooded
	Pond
	Waterfront
	Ravine
	Wetland
	Flood Plain
X	OPEN

Who	When	What
DB	10/23/2023	INSPECTION
GLA	05/11/2020	INSPECTION
GLA	07/10/2019	INSPECTION

The Equalizer. Copyright (c) 1999 - 2009.
Licensed To: Township of Greenwood, County of Wexford, Michigan

Land Value Estimates for Land Table 4010.LAND VALUES

Description	Frontage	Depth	* Factors * Front	Depth	Rate	%Adj.	Reason	Value
ACREAGE			37.700 Acres		2,722	100		102,619
ROW			2.000 Acres		0	100		0
			39.70 Total Acres		Total Est. Land Value =			102,619

Year	Land Value	Building Value	Assessed Value	Board of Review	Tribunal/ Other	Taxable Value
2024	51,300	197,700	249,000			129,653C
2023	45,600	136,600	182,200			89,289C
2022	36,500	59,000	95,500			85,038C
2021	32,400	57,100	89,500			82,322C

*** Information herein deemed reliable but not guaranteed***

Building Type

X	Single Family
	Mobile Home
	Town Home
	Duplex
	A-Frame
X	Wood Frame

Building Style: PLAIN

Yr Built	Remodeled
0	0

Condition: Good

Room List

	Basement
	1st Floor
	2nd Floor
	Bedrooms

(1) Exterior

	Wood/Shingle
X	Aluminum/Vinyl
	Brick
X	Insulation

(2) Windows

X	Many Avg. Few	X	Large Avg. Small

	Wood Sash
	Metal Sash
X	Vinyl Sash
	Double Hung
	Horiz. Slide
	Casement
	Double Glass
	Patio Doors
X	Storms & Screens

(3) Roof

X	Gable		Gambrel
	Hip		Mansard
	Flat		Shed

X	Asphalt Shingle

Chimney:

(3) Roof (cont.)

	Eavestrough
X	Insulation
0	Front Overhang
0	Other Overhang

(4) Interior

X	Drywall Paneled		Plaster Wood T&G

Trim & Decoration

	Ex	X	Ord		Min

Size of Closets

	Lg	X	Ord		Small

Doors:		Solid	X	H.C.	

(5) Floors

Kitchen:
Other: Linoleum
Other: Carpeted

(6) Ceilings

X	Drywall

(7) Excavation

Basement: 1664 S.F.
Crawl: 0 S.F.
Slab: 0 S.F.
Height to Joists: 0.0

(8) Basement

	Conc. Block
	Poured Conc.
	Stone
	Treated Wood
	Concrete Floor

(9) Basement Finish

1664	Recreation	SF
	Living	SF
1	Walkout Doors (B)	
	No Floor	SF
	Walkout Doors (A)	

(10) Floor Support

Joists:
Unsupported Len:
Cntr.Sup:

(11) Heating/Cooling

X	Gas		Oil		Elec.
	Wood		Coal		Steam

	Forced Air w/o Ducts
X	Forced Air w/ Ducts
	Forced Hot Water
	Electric Baseboard
	Elec. Ceil. Radiant
	Radiant (in-floor)
	Electric Wall Heat
	Space Heater
	Wall/Floor Furnace
	Forced Heat & Cool
	Heat Pump
	No Heating/Cooling
	Central Air
	Wood Furnace

(12) Electric

150	Amps Service

No./Qual. of Fixtures

	Ex.	X	Ord.		Min

No. of Elec. Outlets

	Many	X	Ave.		Few

(13) Plumbing

2	Average Fixture(s)
	3 Fixture Bath
	2 Fixture Bath
	Softener, Auto
	Softener, Manual
	Solar Water Heat
	No Plumbing
	Extra Toilet
	Extra Sink
	Separate Shower
	Ceramic Tile Floor
	Ceramic Tile Wains
	Ceramic Tub Alcove
	Vent Fan

(14) Water/Sewer

	Public Water
	Public Sewer
1	Water Well
1	1000 Gal Septic
	2000 Gal Septic

Lump Sum Items:

(15) Built-ins

	Appliance Allow.
	Cook Top
	Dishwasher
	Garbage Disposal
	Bath Heater
	Vent Fan
	Hot Tub
	Unvented Hood
	Vented Hood
	Intercom
	Jacuzzi Tub
	Jacuzzi repl.Tub
	Oven
	Microwave
	Standard Range
	Self Clean Range
	Sauna
	Trash Compactor
	Central Vacuum
	Security System

(15) Fireplaces

	Interior 1 Story
	Interior 2 Story
	2nd/Same Stack
	Two Sided
	Exterior 1 Story
	Exterior 2 Story
	Prefab 1 Story
	Prefab 2 Story
	Heat Circulator
	Raised Hearth
	Wood Stove
	Direct-Vented Gas

Class: C
Effec. Age: 5
Floor Area: 1,664
Total Base New : 323,944 E.C.F.
Total Depr Cost: 304,770 X 1.297
Estimated T.C.V: 395,286

(16) Porches/Decks

Area	Type
192	WCP (1 Story)
64	WCP (1 Story)
112	Treated Wood
112	Treated Wood

(17) Garage

Year Built: 2022
Car Capacity:
Class: D
Exterior: Pole
Brick Ven.: 0
Stone Ven.: 0
Common Wall: Detache
Foundation: 18 Inch
Finished ?:
Auto. Doors: 0
Mech. Doors: 0
Area: 576
% Good: 0
Storage Area: 0
No Conc. Floor: 576

Bsmnt Garage:

Carport Area:
Roof:

Cost Est. for Res. Bldg: 1 Single Family PLAIN Cls C Blt 0
(11) Heating System: Forced Air w/ Ducts
Ground Area = 1664 SF Floor Area = 1664 SF.
Phy/Ab.Phy/Func/Econ/Comb. % Good=95/100/100/100/95
Building Areas

Stories	Exterior	Foundation	Size	Cost New	Depr. Cost	
1 Story	Siding	Basement	1,664			
			Total:	237,251	225,388	
Other Additions/Adjustments						
Recreation Room			1664	32,398	30,778	
Basement, Outside Entrance, Below Grade			1	2,578	2,449	
Plumbing						
3 Fixture Bath			1	4,678	4,444	
Water/Sewer						
1000 Gal Septic			1	4,899	4,654	
Water Well, 150 Feet			1	8,655	8,222	
Porches						
WCP (1 Story)			192	7,874	7,480	
WCP (1 Story)			64	3,709	3,524	
Deck						
Treated Wood			112	2,815	2,674	
Treated Wood			112	2,815	2,674	
Garages						
Class: D Exterior: Pole (Unfinished)						
Base Cost			576	12,891	12,246	
No Concrete Floor			576	-3,231	-3,069	
Class: D Exterior: Pole (Unfinished)						
Base Cost			288	8,228	4,114	*5
No Concrete Floor			288	-1,616	-808	
			Totals:	323,944	304,770	

<<<<< Calculations too long. See Valuation printout for complete pricing. >>>>>

*** Information herein deemed reliable but not guaranteed***

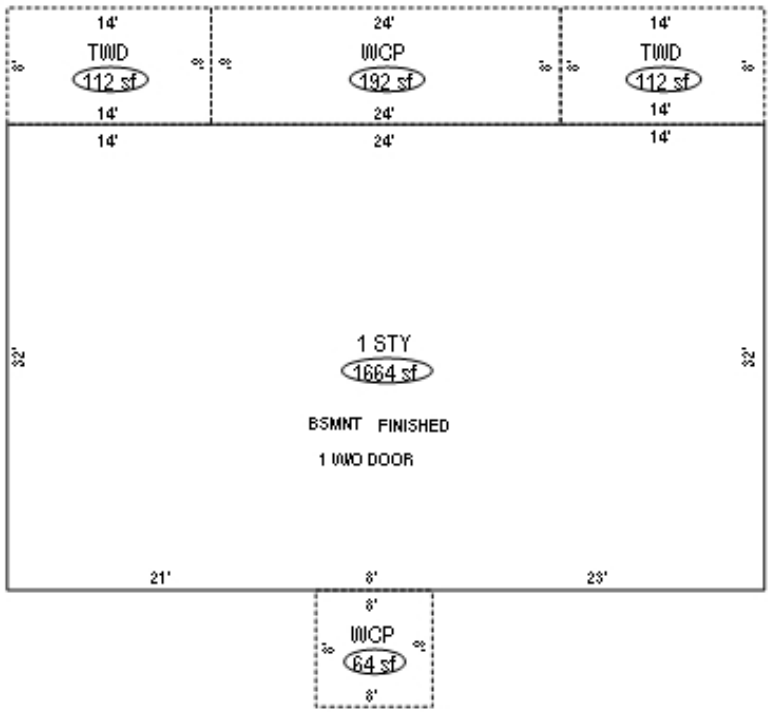

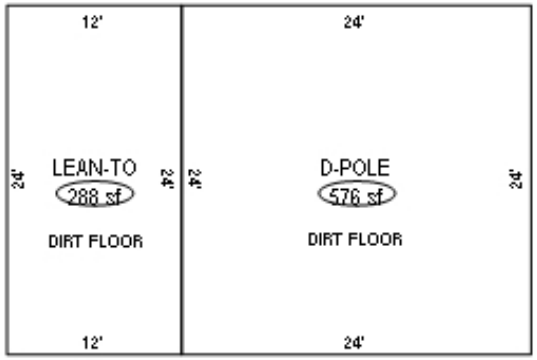

*** Information herein deemed reliable but not guaranteed***

Parcel Number: 2410-34-4101 Jurisdiction: GREENWOOD TWP County: WEXFORD Printed on 02/15/2024

Grantor	Grantee	Sale Price	Sale Date	Inst. Type	Terms of Sale	Liber & Page	Verified By	Prcnt. Trans.
MILLER, AARON & MARY ANNE	STOLL, TIMOTHY & MIRIAM	130,000	07/25/2018	QC	03-ARM'S LENGTH	683/655	DEED	100.0
DEUTSCHE BANK NATIONAL TRU	MILLER, AARON & MARY ANNE	55,000	05/15/2012	WD	11-FROM LENDING INSTITUTI	648/1829	DEED	100.0
MCBRIAN, CARL D & EMERYELL	DEUTSCHE BANK NATIONAL TRU	0	03/18/2011	SD	10-FORECLOSURE	638/1577	DEED	0.0

Property Address

6351 N 33 RD

Owner's Name/Address

STOLL, TIMOTHY & MIRIAM
6351 N 33 RD
MANTON MI 49663

Tax Description

N 1/2 OF SE 1/4 EXC PAR COM AT SE COR OF N 1/2 OF SE 1/4: TH N 908.86 FT; & W 521 FT TO POB: N 411.14 FT; W 2119 FT; S 411.14 FT; E 2119 FT TO POB; & EXC PAR COM AT SE COR OF N 1/2 OF SE 1/4; W 521 FT TO POB: N 411.14 FT; W 2119 FT; S 411.14 FT; E 2119 FT TO POB. --40 A.-- GW. SEC. 34 T24N R10W -MANTON- [[PART ASSESSED UNDER 34-4103 '00

Comments/Influences

The Equalizer. Copyright (c) 1999 - 2009. Licensed To: Township of Greenwood, County of Wexford, Michigan

Class: RESIDENTIAL-IMPROV Zoning:

School: MANTON CONSOLIDATED SCHOOLS

P.R.E. 100% 04/03/2019

:

2024 Est TCV 377,968 TCV/TFA: 151.92

Building Permit(s)	Date	Number	Status
RESIDENTIAL - NEW	11/09/2004	PB12545	
RESIDENTIAL - REMODEL	08/02/2002	PE14661	

X Improved | Vacant

	Public Improvements
	Dirt Road
X	Gravel Road
	Paved Road
	Storm Sewer
	Sidewalk
	Water
	Sewer
X	Electric
	Gas
	Curb
	Street Lights
	Standard Utilities
	Underground Utils.

	Topography of Site
	Level
X	Rolling
	Low
X	High
	Landscaped
	Swamp
X	Wooded
	Pond
	Waterfront
	Ravine
	Wetland
	Flood Plain
X	OPEN/PINES

Who	When	What
GLA	05/11/2020	INSPECTION
GLA	07/10/2019	INSPECTION
GLA	07/10/2019	INSPECTION

Land Value Estimates for Land Table 4010.LAND VALUES

Description	Frontage	Depth	* Factors * Front	Depth	Rate	%Adj.	Reason	Value
ACREAGE			39.000 Acres		2,722	100		106,158
ROW			1.000 Acres		0	100		0
			40.00 Total Acres		Total Est. Land Value =			106,158

Land Improvement Cost Estimates

Description	Rate	Size	% Good	Cash Value
D/W/P: 3.5 Concrete	5.82	528	62	1,905
Wood Frame	18.36	360	43	2,842
Wood Frame	18.03	816	43	6,326
Total Estimated Land Improvements True Cash Value =				11,073

Year	Land Value	Building Value	Assessed Value	Board of Review	Tribunal/ Other	Taxable Value
2024	53,100	135,900	189,000			147,073C
2023	47,000	112,400	159,400			140,070C
2022	37,400	96,000	133,400			133,400S
2021	33,300	97,600	130,900			130,900S

*** Information herein deemed reliable but not guaranteed***

Building Type

X	Single Family
	Mobile Home
	Town Home
	Duplex
	A-Frame
X	Wood Frame

Building Style: RANCH

Yr Built	Remodeled
1985	1998

Condition: Very Poor

Room List

	Basement
	1st Floor
	2nd Floor
	Bedrooms

(1) Exterior

X	Wood/Shingle
	Aluminum/Vinyl
	Brick
	Insulation

(2) Windows

X	Many		Large
	Avg.	X	Avg.
	Few		Small

	Wood Sash
	Metal Sash
	Vinyl Sash
	Double Hung
	Horiz. Slide
	Casement
	Double Glass
	Patio Doors
	Storms & Screens

(3) Roof

X	Gable		Gambrel
	Hip		Mansard
	Flat		Shed

X	Asphalt Shingle

Chimney: Brick

(3) Roof (cont.)

	Eavestrough
	Insulation
0	Front Overhang
0	Other Overhang

(4) Interior

	Drywall		Plaster
	Paneled		Wood T&G

Trim & Decoration

	Ex	X	Ord		Min

Size of Closets

	Lg	X	Ord		Small

Doors:		Solid	X	H.C.	

(5) Floors

Kitchen:
Other:
Other:

(6) Ceilings

(7) Excavation

Basement: 1792 S.F.
Crawl: 0 S.F.
Slab: 0 S.F.
Height to Joists: 0.0

(8) Basement

	Conc. Block
	Poured Conc.
	Stone
	Treated Wood
	Concrete Floor

(9) Basement Finish

	Recreation SF
	Living SF
	Walkout Doors (B)
	No Floor SF
	Walkout Doors (A)

(10) Floor Support

Joists:
Unsupported Len:
Cntr.Sup:

(11) Heating/Cooling

X	Gas		Oil		Elec.
	Wood		Coal		Steam

	Forced Air w/o Ducts
X	Forced Air w/ Ducts
	Forced Hot Water
	Electric Baseboard
	Elec. Ceil. Radiant
	Radiant (in-floor)
	Electric Wall Heat
	Space Heater
	Wall/Floor Furnace
	Forced Heat & Cool
	Heat Pump
	No Heating/Cooling

	Central Air
	Wood Furnace

(12) Electric

0	Amps Service

No./Qual. of Fixtures

	Ex.	X	Ord.		Min

No. of Elec. Outlets

	Many	X	Ave.		Few

(13) Plumbing

1	Average Fixture(s)
	3 Fixture Bath
	2 Fixture Bath
	Softener, Auto
	Softener, Manual
	Solar Water Heat
	No Plumbing
	Extra Toilet
	Extra Sink
	Separate Shower
	Ceramic Tile Floor
	Ceramic Tile Wains
	Ceramic Tub Alcove
	Vent Fan

(14) Water/Sewer

	Public Water
	Public Sewer
1	Water Well
1	1000 Gal Septic
	2000 Gal Septic

Lump Sum Items:

(15) Built-ins

	Appliance Allow.
	Cook Top
	Dishwasher
	Garbage Disposal
	Bath Heater
	Vent Fan
	Hot Tub
	Unvented Hood
	Vented Hood
	Intercom
	Jacuzzi Tub
	Jacuzzi repl.Tub
	Oven
	Microwave
	Standard Range
	Self Clean Range
	Sauna
	Trash Compactor
	Central Vacuum
	Security System

(15) Fireplaces

	Interior 1 Story
	Interior 2 Story
	2nd/Same Stack
	Two Sided
	Exterior 1 Story
	Exterior 2 Story
	Prefab 1 Story
	Prefab 2 Story
	Heat Circulator
	Raised Hearth
	Wood Stove
	Direct-Vented Gas

Class: CD
Effec. Age: 44
Floor Area: 1,792
Total Base New : 382,328 E.C.F.
Total Depr Cost: 171,283 X 1.297
Estimated T.C.V: 222,154

(16) Porches/Decks

Area	Type
460	Treated Wood

(17) Garage

Year Built:
Car Capacity:
Class: CD
Exterior: Pole
Brick Ven.: 0
Stone Ven.: 0
Common Wall: Detache
Foundation: 18 Inch
Finished ?:
Auto. Doors: 0
Mech. Doors: 0
Area: 4056
% Good: 0
Storage Area: 0
No Conc. Floor: 0

Bsmnt Garage:

Carport Area:
Roof:

Cost Est. for Res. Bldg: 1 Single Family RANCH Cls CD Blt 1985
(11) Heating System: Forced Air w/ Ducts
Ground Area = 1792 SF Floor Area = 1792 SF.
Phy/Ab.Phy/Func/Econ/Comb. % Good=56/100/80/100/44.8
Building Areas

Stories	Exterior	Foundation	Size	Cost New	Depr. Cost
1 Story	Siding	Basement	1,792		
			Total:	221,925	99,422
Other Additions/Adjustments					
Water/Sewer					
1000 Gal Septic			1	4,582	2,053
Water Well, 100 Feet			1	5,680	2,545
Deck					
Treated Wood w/Roof (Deck Portion)			460	7,033	3,151
Treated Wood w/Roof (Roof portion)			460	6,376	2,856
Garages					
Class: D Exterior: Siding Foundation: 18 Inch (Unfinished)					
Basement Garage: 1 Car			1	2,510	1,124
Class: CD Exterior: Pole (Unfinished)					
Base Cost			4056	88,218	39,522
Class: CD Exterior: Pole (Unfinished)					
Base Cost			1344	29,232	13,096
Local Cost Items					
POLE LEAN TO			1656	8,694	3,895
QUONSET BUILDING			880	8,078	3,619
			Totals:	382,328	171,283

Notes:

ECF (RESIDENTIAL) 1.297 => TCV: 222,154

*** Information herein deemed reliable but not guaranteed***

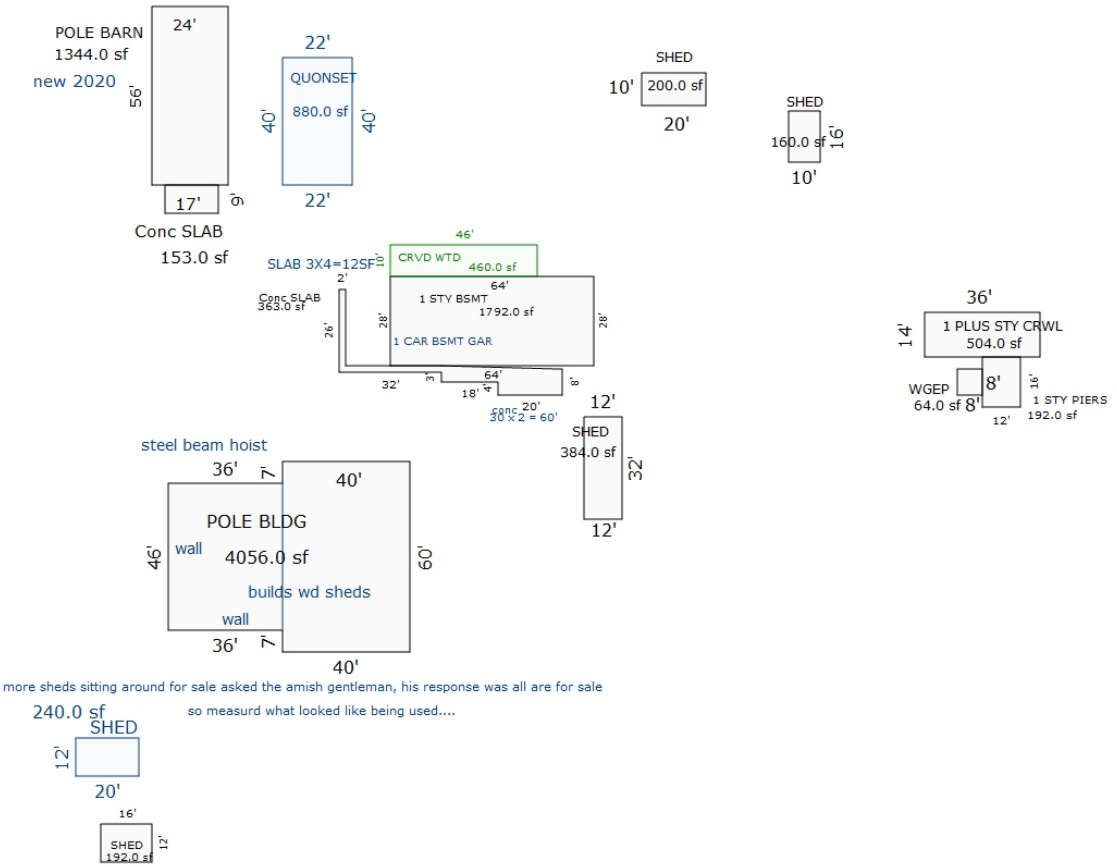

Sketch by Apex Sketch

*** Information herein deemed reliable but not guaranteed***

Building Type

X	Single Family
	Mobile Home
	Town Home
	Duplex
	A-Frame
X	Wood Frame

Building Style: PLAIN

Yr Built	Remodeled
0	0

Condition: Good

Room List

	Basement
	1st Floor
	2nd Floor
	Bedrooms

(1) Exterior

	Wood/Shingle
X	Aluminum/Vinyl
	Brick
X	Insulation

(2) Windows

	Many		Large
X	Avg.	X	Avg.
	Few		Small

	Wood Sash
	Metal Sash
X	Vinyl Sash
	Double Hung
	Horiz. Slide
	Casement
	Double Glass
	Patio Doors
X	Storms & Screens

(3) Roof

X	Gable		Gambrel
	Hip		Mansard
	Flat		Shed

X	Asphalt Shingle

Chimney:

(3) Roof (cont.)

	Eavestrough
X	Insulation
0	Front Overhang
0	Other Overhang

(4) Interior

X	Drywall		Plaster
	Paneled		Wood T&G

Trim & Decoration

	Ex	X	Ord		Min

Size of Closets

	Lg	X	Ord		Small

Doors:		Solid	X	H.C.	

(5) Floors

Kitchen:
Other: Linoleum
Other: Carpeted

(6) Ceilings

X	Drywall		

(7) Excavation

Basement: 0 S.F.
Crawl: 0 S.F.
Slab: 0 S.F.
Height to Joists: 0.0

(8) Basement

	Conc. Block
	Poured Conc.
	Stone
	Treated Wood
	Concrete Floor

(9) Basement Finish

	Recreation SF
	Living SF
	Walkout Doors (B)
	No Floor SF
	Walkout Doors (A)

(10) Floor Support

Joists:
Unsupported Len:
Cntr.Sup:

(11) Heating/Cooling

X	Gas		Oil		Elec.
	Wood		Coal		Steam

	Forced Air w/o Ducts
X	Forced Air w/ Ducts
	Forced Hot Water
	Electric Baseboard
	Elec. Ceil. Radiant
	Radiant (in-floor)
	Electric Wall Heat
	Space Heater
	Wall/Floor Furnace
	Forced Heat & Cool
	Heat Pump
	No Heating/Cooling

	Central Air
	Wood Furnace

(12) Electric

150	Amps Service

No./Qual. of Fixtures

	Ex.	X	Ord.		Min

No. of Elec. Outlets

	Many	X	Ave.		Few

(13) Plumbing

1	Average Fixture(s)
	3 Fixture Bath
	2 Fixture Bath
	Softener, Auto
	Softener, Manual
	Solar Water Heat
	No Plumbing
	Extra Toilet
	Extra Sink
	Separate Shower
	Ceramic Tile Floor
	Ceramic Tile Wains
	Ceramic Tub Alcove
	Vent Fan

(14) Water/Sewer

	Public Water
	Public Sewer
	Water Well
	1000 Gal Septic
	2000 Gal Septic

Lump Sum Items:

(15) Built-ins

	Appliance Allow.
	Cook Top
	Dishwasher
	Garbage Disposal
	Bath Heater
	Vent Fan
	Hot Tub
	Unvented Hood
	Vented Hood
	Intercom
	Jacuzzi Tub
	Jacuzzi repl.Tub
	Oven
	Microwave
	Standard Range
	Self Clean Range
	Sauna
	Trash Compactor
	Central Vacuum
	Security System

(15) Fireplaces

	Interior 1 Story
	Interior 2 Story
	2nd/Same Stack
	Two Sided
	Exterior 1 Story
	Exterior 2 Story
	Prefab 1 Story
	Prefab 2 Story
	Heat Circulator
	Raised Hearth
1	Wood Stove
	Direct-Vented Gas

Class: D
Effec. Age: 54
Floor Area: 696
Total Base New : 86,230 E.C.F.
Total Depr Cost: 29,748 X 1.297
Estimated T.C.V: 38,583

(16) Porches/Decks

Area	Type
64	WGEP (1 Story)

(17) Garage

Year Built:
Car Capacity:
Class:
Exterior:
Brick Ven.:
Stone Ven.:
Common Wall:
Foundation:
Finished ?:
Auto. Doors:
Mech. Doors:
Area:
% Good:
Storage Area:
No Conc. Floor:

Bsmnt Garage:

Carport Area:
Roof:

Cost Est. for Res. Bldg: 2 Single Family PLAIN Cls D Blt 0
(11) Heating System: Forced Air w/ Ducts
Ground Area = 696 SF Floor Area = 696 SF.
Phy/Ab.Phy/Func/Econ/Comb. % Good=46/75/100/100/34.5
Building Areas

Stories	Exterior	Foundation	Size	Cost New	Depr. Cost
1+ Story	Siding	Piers	504		
1 Story	Siding	Piers	192		
		Total:		78,327	27,022
Other Additions/Adjustments					
Porches					
WGEP (1 Story)			64	6,111	2,108
Fireplaces					
Wood Stove			1	1,792	618
		Totals:		86,230	29,748

Notes:

ECF (RESIDENTIAL) 1.297 => TCV: 38,583

*** Information herein deemed reliable but not guaranteed***

Parcel Number: 2410-34-4102 Jurisdiction: GREENWOOD TWP County: WEXFORD Printed on 02/15/2024

Grantor	Grantee	Sale Price	Sale Date	Inst. Type	Terms of Sale	Liber & Page	Verified By	Prcnt. Trans.
SWINEHART, BRYAN A. & DEBO	HUNTINGTON NATIONAL BANK	0	07/03/2014	OTH	06-COURT JUDGEMENT	669/982	DEED	0.0
MCBRIAN, JASON	SWINEHART, BRYAN & DEBORAH	12,000	10/28/2002	WD	08-ESTATE	450:349	DEED	0.0

Property Address

6459 N 33 RD

Owner's Name/Address

HUNTINGTON NATIONAL BANK
7 EASTON OVAL
COLUMBUS OH 43219

Tax Description

PAR COM AT SE COR OF N 1/2 OF SE 1/4: TH N 908.86 FT & W 521 FT TO POB: N 411.14 FT; W 2119 FT; S 411.14 FT; E 2119 FT TO POB. TOG WITH EASMT L372, P334 --20 A.-- GW. SEC. 34 T24N R10W - MANTON - [[ASSESSED W/34-4101 '97

Comments/Influences

The Equalizer. Copyright (c) 1999 - 2009. Licensed To: Township of Greenwood, County of Wexford, Michigan

Class: RESIDENTIAL-IMPROV Zoning:

School: MANTON CONSOLIDATED SCHOOLS

P.R.E. 0%

:

2024 Est TCV 134,113 TCV/TFA: 112.89

Building Permit(s)	Date	Number	Status
RESIDENTIAL - NEW	03/10/2003	PM6618	
MOBILE HOME	01/14/2003	PM6514	
MOBILE HOME	01/08/2003	PP2899	
RESIDENTIAL - REMODEL	12/17/2002	PE15048	

X Improved | Vacant

Public Improvements

- Dirt Road
- X Gravel Road
- Paved Road
- Storm Sewer
- Sidewalk
- Water
- Sewer
- X Electric
- Gas
- Curb
- Street Lights
- Standard Utilities
- Underground Utils.

Topography of Site

- Level
- X Rolling
- X Low
- X High
- Landscaped
- Swamp
- X Wooded
- Pond
- Waterfront
- Ravine
- Wetland
- Flood Plain
- X OPEN/PINES

Who	When	What
GLA	05/11/2020	INSPECTION
GLA	07/10/2019	INSPECTION
GLA	07/10/2019	INSPECTION

Land Value Estimates for Land Table 4010.LAND VALUES

Description	Frontage	Depth	* Factors * Front	Depth	Rate	%Adj.	Reason	Value
ACREAGE			20.000 Acres		3,200	100		64,000
			20.00 Total Acres		Total Est. Land Value =			64,000

Land Improvement Cost Estimates

Description	Rate	Size	% Good	Cash Value
D/W/P: 3.5 Concrete	6.21	92	40	228
D/W/P: 3.5 Concrete	6.21	480	40	1,192
D/W/P: 3.5 Concrete	6.21	64	40	159
Wood Frame	25.07	120	33	993
Wood Frame	25.07	120	33	993
Total Estimated Land Improvements True Cash Value =				3,565

Year	Land Value	Building Value	Assessed Value	Board of Review	Tribunal/ Other	Taxable Value
2024	32,000	35,100	67,100			42,387C
2023	26,000	28,500	54,500			40,369C
2022	22,000	23,900	45,900			38,447C
2021	20,000	21,400	41,400			37,219C

*** Information herein deemed reliable but not guaranteed***

Building Type

	Single Family
X	Mobile Home
	Town Home
	Duplex
	A-Frame

X	Wood Frame

Building Style: SWT/DWT

Yr Built	Remodeled
2002	0

Condition: Good

Room List

	Basement
	1st Floor
	2nd Floor
	Bedrooms

(1) Exterior

	Wood/Shingle
X	Aluminum/Vinyl
	Brick
X	Insulation

(2) Windows

	Many		Large
X	Avg.	X	Avg.
	Few		Small

	Wood Sash
	Metal Sash
X	Vinyl Sash
	Double Hung
	Horiz. Slide
	Casement
	Double Glass
	Patio Doors
X	Storms & Screens

(3) Roof

X	Gable		Gambrel
	Hip		Mansard
	Flat		Shed

X	Asphalt Shingle

Chimney:

(3) Roof (cont.)

	Eavestrough
X	Insulation
0	Front Overhang
0	Other Overhang

(4) Interior

X	Drywall		Plaster
	Paneled		Wood T&G

Trim & Decoration

	Ex	X	Ord		Min

Size of Closets

	Lg	X	Ord		Small

Doors:		Solid	X	H.C.	

(5) Floors

Kitchen:
Other: Linoleum
Other: Carpeted

(6) Ceilings

X	Drywall		

(7) Excavation

Basement: 0 S.F.
Crawl: 0 S.F.
Slab: 0 S.F.
Height to Joists: 0.0

(8) Basement

	Conc. Block
	Poured Conc.
	Stone
	Treated Wood
	Concrete Floor

(9) Basement Finish

	Recreation SF
	Living SF
	Walkout Doors (B)
	No Floor SF
	Walkout Doors (A)

(10) Floor Support

Joists:
Unsupported Len:
Cntr.Sup:

(11) Heating/Cooling

X	Gas		Oil		Elec.
	Wood		Coal		Steam

	Forced Warm Air
	Wall Furnace
X	Warm & Cool Air
	Heat Pump

	Central Air
	Wood Furnace

(12) Electric

150	Amps Service

No./Qual. of Fixtures

	Ex.	X	Ord.		Min

No. of Elec. Outlets

	Many	X	Ave.		Few

(13) Plumbing

2	Average Fixture(s)
	3 Fixture Bath
	2 Fixture Bath
	Softener, Auto
	Softener, Manual
	Solar Water Heat
	No Plumbing
	Extra Toilet
	Extra Sink
	Separate Shower
	Ceramic Tile Floor
	Ceramic Tile Wains
	Ceramic Tub Alcove
	Vent Fan

(14) Water/Sewer

	Public Water
	Public Sewer
1	Water Well
1	1000 Gal Septic
	2000 Gal Septic

Lump Sum Items:

(15) Built-ins

	Appliance Allow.
	Cook Top
	Dishwasher
	Garbage Disposal
	Bath Heater
	Vent Fan
	Hot Tub
	Unvented Hood
	Vented Hood
	Intercom
	Jacuzzi Tub
	Jacuzzi repl.Tub
	Oven
	Microwave
	Standard Range
	Self Clean Range
	Sauna
	Trash Compactor
	Central Vacuum
	Security System

(15) Fireplaces

	Interior 1 Story
	Interior 2 Story
	2nd/Same Stack
	Two Sided
	Exterior 1 Story
	Exterior 2 Story
	Prefab 1 Story
	Prefab 2 Story
	Heat Circulator
	Raised Hearth
	Wood Stove
	Direct-Vented Gas

Class: Fair
Effec. Age: 20
Floor Area:
Total Base New : 111,544 E.C.F.
Total Depr Cost: 51,309 X 1.297
Estimated T.C.V: 66,548

(16) Porches/Decks

Area	Type
48	WGEP (1 Story)
18	Treated Wood

(17) Garage

Year Built:
Car Capacity:
Class: CD
Exterior: Pole
Brick Ven.: 0
Stone Ven.: 0
Common Wall: Detache
Foundation: 18 Inch
Finished ?:
Auto. Doors: 0
Mech. Doors: 0
Area: 576
% Good: 0
Storage Area: 0
No Conc. Floor: 0

Bsmnt Garage:

Carport Area:
Roof:

Cost Est. for Res. Bldg: 1 Mobile Home SWT/DWT Cls Fair Blt 2002
(11) Heating System: Warm & Cool Air
Ground Area = 1188 SF Floor Area = 1188 SF.
Phy/Ab.Phy/Func/Econ/Comb. % Good=46/100/100/100/46
Building Areas

Type	Ext. Walls	Roof/Fnd.	Size	Cost New	Depr. Cost
Main Home	Siding	Comp.Shingle	1188		
			Total:	76,257	35,077
Other Additions/Adjustments					
Skirting, Metal or Vinyl, Sim. St/Brk			142	2,201	1,012
Plumbing					
3 Fixture Bath			1	2,745	1,263
Water/Sewer					
1000 Gal Septic			1	4,582	2,108
Water Well, 100 Feet			1	5,680	2,613
Porches					
WGEP (1 Story)			48	4,315	1,985
Garages					
Class: CD Exterior: Pole (Unfinished)					
Base Cost			576	14,953	6,878
Deck					
Treated Wood			18	811	373
			Totals:	111,544	51,309

Notes:
ECF (RESIDENTIAL) 1.297 => TCV: 66,548

*** Information herein deemed reliable but not guaranteed***

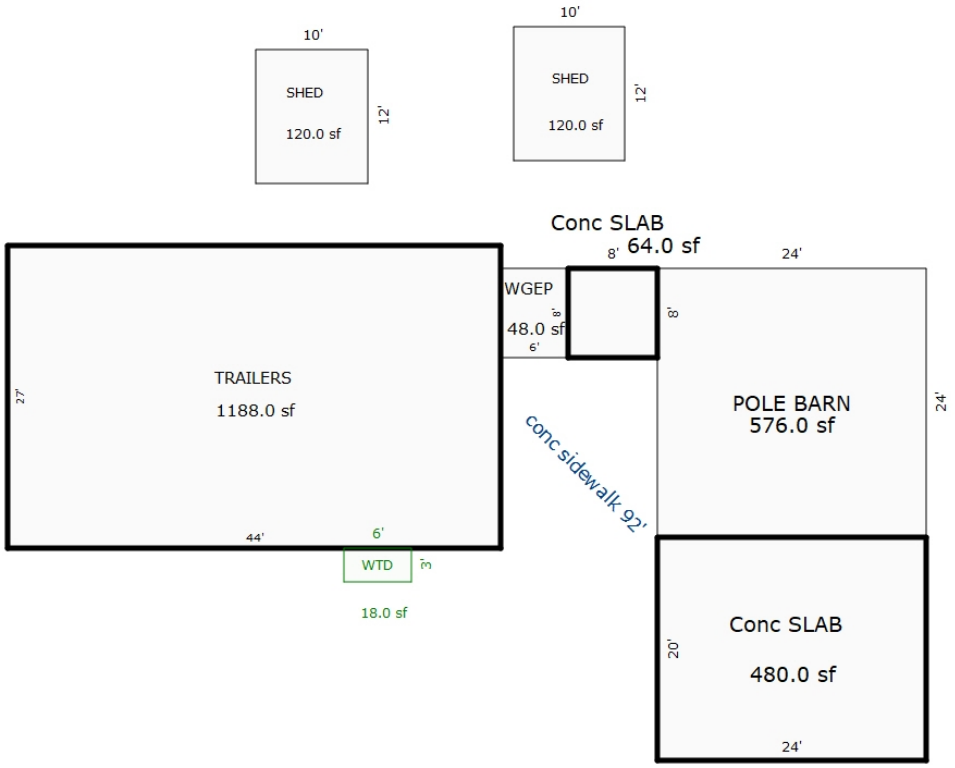

Sketch by Apex Sketch

*** Information herein deemed reliable but not guaranteed***

Parcel Number: 2410-34-4104 Jurisdiction: GREENWOOD TWP County: WEXFORD Printed on 02/15/2024

Grantor	Grantee	Sale Price	Sale Date	Inst. Type	Terms of Sale	Liber & Page	Verified By	Prcnt. Trans.
BUCK, AMANDA	BUCK, TERRY L & LORETTA J	0	09/20/2006	QC	09-FAMILY	592/1427	DEED	0.0

Property Address

6309 N 33 RD

Owner's Name/Address

BUCK, TERRY L
& LORETTA J
6309 N 33 RD
MANTON MI 49663

Tax Description

PAR COM AT SE COR OF N 1/2 OF SE 1/4; W 521 FT TO POB: N 411.14 FT; W 2119 FT; S 411.14 FT; E 2119 FT TO POB. EXC E 250 OF S 175 FT THEREOF. --19 A M/L-- TOG W/EASMT GW SEC 34 T24N R10W -MANTON- [[ASSESSED W/ 34-4103 '00

Comments/Influences

The Equalizer. Copyright (c) 1999 - 2009. Licensed To: Township of Greenwood, County of Wexford, Michigan

Class: RESIDENTIAL-IMPROV Zoning:

School: MANTON CONSOLIDATED SCHOOLS

P.R.E. 100% / /

:

2024 Est TCV 506,424 TCV/TFA: 237.76

Building Permit(s)	Date	Number	Status
Electrical	10/24/2011	PE11-19243	
Res. Single Family	10/19/2011	PB11-0277	
RESIDENTIAL - REMODEL	02/07/2003	PM6570	
RESIDENTIAL - NEW	09/14/2000	PM4431	

X Improved | Vacant

	Public Improvements
	Dirt Road
X	Gravel Road
	Paved Road
	Storm Sewer
	Sidewalk
	Water
	Sewer
X	Electric
	Gas
	Curb
	Street Lights
	Standard Utilities
	Underground Utils.

	Topography of Site
	Level
X	Rolling
X	Low
X	High
	Landscaped
	Swamp
X	Wooded
	Pond
	Waterfront
	Ravine
	Wetland
	Flood Plain
X	OPEN/PINES

Who	When	What
GLA	05/11/2020	INSPECTION
GLA	07/10/2019	INSPECTION
GLA	07/10/2019	INSPECTION

Land Value Estimates for Land Table 4010.LAND VALUES

Description	Frontage	Depth	* Factors * Front	Depth	Rate	%Adj.	Reason	Value
ACREAGE			18.689 Acres		3,200	100		59,805
ROW			0.311 Acres		0	100		0
			19.00 Total Acres		Total Est. Land Value =			59,805

Year	Land Value	Building Value	Assessed Value	Board of Review	Tribunal/ Other	Taxable Value
2024	29,900	223,300	253,200			158,354C
2023	24,300	181,800	206,100			150,814C
2022	20,800	153,100	173,900			143,633C
2021	19,500	154,600	174,100			139,045C

*** Information herein deemed reliable but not guaranteed***

Building Type

X	Single Family
	Mobile Home
	Town Home
	Duplex
	A-Frame
X	Wood Frame

Building Style: PLAIN

Yr Built	Remodeled
2011	0

Condition: Good

Room List

	Basement
	1st Floor
	2nd Floor
	Bedrooms

(1) Exterior

	Wood/Shingle
X	Aluminum/Vinyl
	Brick
X	Insulation

(2) Windows

X	Many		Large
	Avg.	X	Avg.
	Few		Small

	Wood Sash
	Metal Sash
X	Vinyl Sash
	Double Hung
	Horiz. Slide
	Casement
	Double Glass
	Patio Doors
X	Storms & Screens

(3) Roof

X	Gable		Gambrel
	Hip		Mansard
	Flat		Shed

X	Asphalt Shingle

Chimney:

(3) Roof (cont.)

	Eavestrough
X	Insulation
0	Front Overhang
0	Other Overhang

(4) Interior

X	Drywall		Plaster
	Paneled		Wood T&G

Trim & Decoration

	Ex	X	Ord		Min

Size of Closets

	Lg	X	Ord		Small

Doors:		Solid	X	H.C.	

(5) Floors

Kitchen:
Other: Linoleum
Other: Carpeted

(6) Ceilings

X	Drywall		

(7) Excavation

Basement: 1554 S.F.
Crawl: 0 S.F.
Slab: 0 S.F.
Height to Joists: 0.0

(8) Basement

	Conc. Block
	Poured Conc.
	Stone
	Treated Wood
	Concrete Floor

(9) Basement Finish

	Recreation SF
	Living SF
	Walkout Doors (B)
	No Floor SF
	Walkout Doors (A)

(10) Floor Support

Joists:
Unsupported Len:
Cntr.Sup:

(11) Heating/Cooling

X	Gas		Oil		Elec.
	Wood		Coal		Steam

	Forced Air w/o Ducts
X	Forced Air w/ Ducts
	Forced Hot Water
	Electric Baseboard
	Elec. Ceil. Radiant
	Radiant (in-floor)
	Electric Wall Heat
	Space Heater
	Wall/Floor Furnace
	Forced Heat & Cool
	Heat Pump
	No Heating/Cooling

	Central Air
	Wood Furnace

(12) Electric

150	Amps Service

No./Qual. of Fixtures

	Ex.	X	Ord.		Min

No. of Elec. Outlets

	Many	X	Ave.		Few

(13) Plumbing

	Average Fixture(s)
2	3 Fixture Bath
	2 Fixture Bath
	Softener, Auto
	Softener, Manual
	Solar Water Heat
	No Plumbing
	Extra Toilet
	Extra Sink
	Separate Shower
	Ceramic Tile Floor
	Ceramic Tile Wains
	Ceramic Tub Alcove
	Vent Fan

(14) Water/Sewer

	Public Water
	Public Sewer
1	Water Well
1	1000 Gal Septic
	2000 Gal Septic

Lump Sum Items:

(15) Built-ins

	Appliance Allow.
	Cook Top
	Dishwasher
	Garbage Disposal
	Bath Heater
	Vent Fan
	Hot Tub
	Unvented Hood
	Vented Hood
	Intercom
	Jacuzzi Tub
	Jacuzzi repl.Tub
	Oven
	Microwave
	Standard Range
	Self Clean Range
	Sauna
	Trash Compactor
	Central Vacuum
	Security System

(15) Fireplaces

	Interior 1 Story
	Interior 2 Story
	2nd/Same Stack
	Two Sided
	Exterior 1 Story
	Exterior 2 Story
	Prefab 1 Story
	Prefab 2 Story
	Heat Circulator
	Raised Hearth
	Wood Stove
	Direct-Vented Gas

Class: C
Effec. Age: 13
Floor Area: 1,554
Total Base New : 281,259 E.C.F.
Total Depr Cost: 244,697 X 1.297
Estimated T.C.V: 317,372

(16) Porches/Decks

Area	Type
40	WPP
140	WCP (1 Story)
84	Treated Wood

(17) Garage

Year Built: 2011
Car Capacity:
Class: C
Exterior: Siding
Brick Ven.: 0
Stone Ven.: 0
Common Wall: 1 Wall
Foundation: 42 Inch
Finished ?:
Auto. Doors: 0
Mech. Doors: 0
Area: 900
% Good: 0
Storage Area: 0
No Conc. Floor: 0

Bsmnt Garage:

Carport Area:
Roof:

Cost Est. for Res. Bldg: 1 Single Family PLAIN Cls C Blt 2011
(11) Heating System: Forced Air w/ Ducts
Ground Area = 1554 SF Floor Area = 1554 SF.
Phy/Ab.Phy/Func/Econ/Comb. % Good=87/100/100/100/87
Building Areas

Stories	Exterior	Foundation	Size	Cost New	Depr. Cost
1 Story	Siding	Basement	1,554		
			Total:	223,710	194,628
Other Additions/Adjustments					
Plumbing					
3 Fixture Bath			1	4,678	4,070
Water/Sewer					
1000 Gal Septic			1	4,899	4,262
Water Well, 100 Feet			1	5,849	5,089
Porches					
WPP			40	1,875	1,631
WCP (1 Story)			140	6,280	5,464
Deck					
Treated Wood			84	2,347	2,042
Garages					
Class: C Exterior: Siding Foundation: 42 Inch (Unfinished)					
Base Cost			900	34,326	29,864
Common Wall: 1 Wall			1	-2,705	-2,353
			Totals:	281,259	244,697

Notes:

ECF (RESIDENTIAL) 1.297 => TCV: 317,372

*** Information herein deemed reliable but not guaranteed***

2 Houses on the same parcel

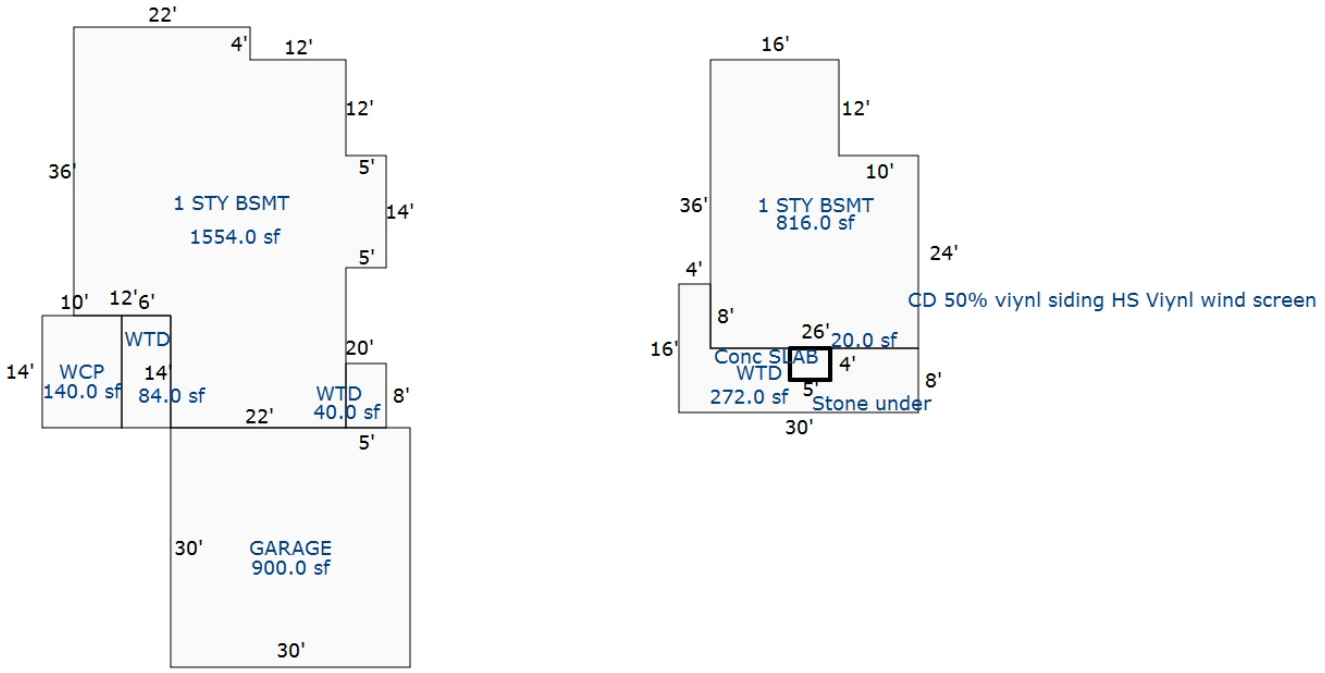

Sketch by Apex Sketch

*** Information herein deemed reliable but not guaranteed***

Building Type

X	Single Family
	Mobile Home
	Town Home
	Duplex
	A-Frame
X	Wood Frame

Building Style: PLAIN

Yr Built	Remodeled
0	0

Condition: Good

Room List

	Basement
	1st Floor
	2nd Floor
	Bedrooms

(1) Exterior

	Wood/Shingle
X	Aluminum/Vinyl
	Brick
X	Insulation

(2) Windows

	Many		Large
X	Avg.	X	Avg.
	Few		Small

	Wood Sash
	Metal Sash
X	Vinyl Sash
	Double Hung
	Horiz. Slide
	Casement
	Double Glass
	Patio Doors
X	Storms & Screens

(3) Roof

X	Gable		Gambrel
	Hip		Mansard
	Flat		Shed

X	Asphalt Shingle

Chimney:

(3) Roof (cont.)

	Eavestrough
X	Insulation
0	Front Overhang
0	Other Overhang

(4) Interior

X	Drywall		Plaster
	Paneled		Wood T&G

Trim & Decoration

	Ex	X	Ord		Min

Size of Closets

	Lg	X	Ord		Small

Doors:		Solid	X	H.C.	

(5) Floors

Kitchen:
Other: Linoleum
Other: Carpeted

(6) Ceilings

X	Drywall		

(7) Excavation

Basement: 576 S.F.
Crawl: 0 S.F.
Slab: 0 S.F.
Height to Joists: 0.0

(8) Basement

	Conc. Block
	Poured Conc.
	Stone
	Treated Wood
	Concrete Floor

(9) Basement Finish

	Recreation	SF
432	Living	SF
1	Walkout Doors (B)	
	No Floor	SF
	Walkout Doors (A)	

(10) Floor Support

Joists:
Unsupported Len:
Cntr.Sup:

(11) Heating/Cooling

X	Gas		Oil		Elec.
	Wood		Coal		Steam

	Forced Air w/o Ducts
X	Forced Air w/ Ducts
	Forced Hot Water
	Electric Baseboard
	Elec. Ceil. Radiant
	Radiant (in-floor)
	Electric Wall Heat
	Space Heater
	Wall/Floor Furnace
	Forced Heat & Cool
	Heat Pump
	No Heating/Cooling
	Central Air
	Wood Furnace

(12) Electric

150	Amps Service

No./Qual. of Fixtures

	Ex.	X	Ord.		Min

No. of Elec. Outlets

	Many	X	Ave.		Few

(13) Plumbing

1	Average Fixture(s)
	3 Fixture Bath
	2 Fixture Bath
	Softener, Auto
	Softener, Manual
	Solar Water Heat
	No Plumbing
	Extra Toilet
	Extra Sink
	Separate Shower
	Ceramic Tile Floor
	Ceramic Tile Wains
	Ceramic Tub Alcove
	Vent Fan

(14) Water/Sewer

	Public Water
	Public Sewer
1	Water Well
1	1000 Gal Septic
	2000 Gal Septic

Lump Sum Items:

(15) Built-ins

	Appliance Allow.
	Cook Top
	Dishwasher
	Garbage Disposal
	Bath Heater
	Vent Fan
	Hot Tub
	Unvented Hood
	Vented Hood
	Intercom
	Jacuzzi Tub
	Jacuzzi repl.Tub
	Oven
	Microwave
	Standard Range
	Self Clean Range
	Sauna
	Trash Compactor
	Central Vacuum
	Security System

(15) Fireplaces

	Interior 1 Story
	Interior 2 Story
	2nd/Same Stack
	Two Sided
	Exterior 1 Story
	Exterior 2 Story
	Prefab 1 Story
	Prefab 2 Story
	Heat Circulator
	Raised Hearth
	Wood Stove
	Direct-Vented Gas

Class: CD
Effec. Age: 18
Floor Area: 576
Total Base New : 121,526 E.C.F.
Total Depr Cost: 99,651 X 1.297
Estimated T.C.V: 129,247

(16) Porches/Decks

Area	Type
304	WCP (1 Story)

(17) Garage

Year Built:
Car Capacity:
Class:
Exterior:
Brick Ven.:
Stone Ven.:
Common Wall:
Foundation:
Finished ?:
Auto. Doors:
Mech. Doors:
Area:
% Good:
Storage Area:
No Conc. Floor:

Bsmnt Garage:

Carport Area:
Roof:

Cost Est. for Res. Bldg: 2 Single Family PLAIN Cls CD Blt 0
(11) Heating System: Forced Air w/ Ducts
Ground Area = 576 SF Floor Area = 576 SF.
Phy/Ab.Phy/Func/Econ/Comb. % Good=82/100/100/100/82
Building Areas

Stories	Exterior	Foundation	Size	Cost New	Depr. Cost
1 Story	Siding	Basement	576		
			Total:	85,587	70,181
Other Additions/Adjustments					
Basement Living Area			432	14,545	11,927
Basement, Outside Entrance, Below Grade			1	2,176	1,784
Water/Sewer					
1000 Gal Septic			1	4,582	3,757
Water Well, 100 Feet			1	5,680	4,658
Porches					
WCP (1 Story)			304	8,956	7,344
			Totals:	121,526	99,651

Notes:

ECF (RESIDENTIAL) 1.297 => TCV: 129,247

*** Information herein deemed reliable but not guaranteed***

Parcel Number: 2410-34-4105 Jurisdiction: GREENWOOD TWP County: WEXFORD Printed on 02/15/2024

Grantor	Grantee	Sale Price	Sale Date	Inst. Type	Terms of Sale	Liber & Page	Verified By	Prcnt. Trans.

Property Address
3858 BUCK RD

Owner's Name/Address
BUCK, AMANDA 6309 N 33 RD MANTON MI 49663

Tax Description
COM AT SE COR OF N 1/2 OF SE 1/4; W 521 FT TO POB: W 250 FT; N 175 FT; E 250 FT; S 175 FT TO POB. 1 A M/L- TOG W/ EASMT GW SEC 34 T24N R10W -MANTON- [[ASSESSED W/ 34-4104 '06

Comments/Influences

Class: RESIDENTIAL-VACANT	Zoning:
School: MANTON CONSOLIDATED SCHOOLS	
P.R.E. 100% 03/30/2016	
:	
2024 Est TCV 10,953	

Building Permit(s)	Date	Number	Status
RESIDENTIAL - NEW	10/11/2006	PE17717	
RESIDENTIAL - NEW	10/11/2006	PM9315	
RESIDENTIAL - NEW	07/18/2006	PP4267	
RESIDENTIAL - NEW	04/20/2006	PB13119	

	Improved	X	Vacant

	Public Improvements
	Dirt Road
X	Gravel Road
	Paved Road
	Storm Sewer
	Sidewalk
	Water
	Sewer
X	Electric
	Gas
	Curb
	Street Lights
	Standard Utilities
	Underground Utils.

	Topography of Site
	Level
X	Rolling
	Low
X	High
	Landscaped
	Swamp
	Wooded
	Pond
	Waterfront
	Ravine
	Wetland
	Flood Plain
X	PINES

Who	When	What
GLA	05/11/2020	INSPECTION
GLA	07/10/2019	INSPECTION
GLA	07/10/2019	INSPECTION

Land Value Estimates for Land Table 4010.LAND VALUES

Description	Frontage	Depth	* Factors * Front	Depth	Rate	%Adj.	Reason	Value
ACREAGE			1.000 Acres		10,953	100		10,953
			1.00 Total Acres		Total Est. Land Value =			10,953

Year	Land Value	Building Value	Assessed Value	Board of Review	Tribunal/ Other	Taxable Value
2024	5,500	0	5,500			2,180C
2023	3,000	0	3,000			2,077C
2022	2,500	0	2,500			1,979C
2021	3,000	0	3,000			1,916C

The Equalizer. Copyright (c) 1999 - 2009. Licensed To: Township of Greenwood, County of Wexford, Michigan

*** Information herein deemed reliable but not guaranteed***

Parcel Number: 2410-34-4301 Jurisdiction: GREENWOOD TWP County: WEXFORD Printed on 02/15/2024

Grantor	Grantee	Sale Price	Sale Date	Inst. Type	Terms of Sale	Liber & Page	Verified By	Prcnt. Trans.
KOVACS, EMIL	LOWE, BARRY & NANCY	60,000	10/31/2018	WD	03-ARM'S LENGTH	6832/341	DEED	100.0

Property Address
3559 E 14 RD

Owner's Name/Address
LOWE, BARRY & NANCY
8094 TOWNLINE RD
KINGSLEY MI 49649

Tax Description
SW 1/4 OF SE 1/4 40 A. GW. SEC. 34 T24N R10W -MANTON-

Comments/Influences

The Equalizer. Copyright (c) 1999 - 2009.
Licensed To: Township of Greenwood, County of Wexford, Michigan

Class: RESIDENTIAL-VACANT Zoning:
School: MANTON CONSOLIDATED SCHOOLS
P.R.E. 0%
:
2024 Est TCV 218,741 TCV/TFA: 82.67

Building Permit(s)	Date	Number	Status
Res. New Construction	08/09/2022	PB22-0213	COMPLETE
Res. Single Family	05/13/2021	PB21-061	ENTERED
Foundation	/ /	PB21-0000	COMPLETE

X	Improved	
	Vacant	

	Public Improvements
	Dirt Road
X	Gravel Road
	Paved Road
	Storm Sewer
	Sidewalk
	Water
	Sewer
X	Electric
	Gas
	Curb
	Street Lights
	Standard Utilities
	Underground Utils.

	Topography of Site
	Level
X	Rolling
X	Low
X	High
	Landscaped
	Swamp
X	Wooded
	Pond
	Waterfront
	Ravine
	Wetland
	Flood Plain
X	OPEN/PINES

Who	When	What
JB	10/23/2023	INSPECTION
GLA	10/31/2022	INSPECTION
GLA	07/10/2019	INSPECTION

Land Value Estimates for Land Table 4010.LAND VALUES

Description	Frontage	Depth	* Factors * Front	Depth	Rate	%Adj.	Reason	Value
ACREAGE			39.000 Acres		2,722	100		106,158
ROW			1.000 Acres		0	100		0
			40.00 Total Acres		Total Est. Land Value =			106,158

Land Improvement Cost Estimates

Description	Rate	Size	% Good	Cash Value
D/W/P: 3.5 Concrete	6.21	162	100	1,006
Total Estimated Land Improvements True Cash Value =				1,006

Year	Land Value	Building Value	Assessed Value	Board of Review	Tribunal/ Other	Taxable Value
2024	53,100	56,300	109,400			86,689C
2023	47,000	0	47,000			36,085C
2022	37,400	0	37,400			34,367C
2021	33,300	0	33,300			33,270C

*** Information herein deemed reliable but not guaranteed***

Building Type

X	Single Family
	Mobile Home
	Town Home
	Duplex
	A-Frame
X	Wood Frame

Building Style: POLE BARN HOUSE

Yr Built	Remodeled
2023	0

Condition: Good
Part. Construct.: 25%

Room List

	Basement
	1st Floor
	2nd Floor
	Bedrooms

(1) Exterior

	Wood/Shingle
X	Aluminum/Vinyl
	Brick
X	Insulation

(2) Windows

	Many		Large
X	Avg.	X	Avg.
	Few		Small

	Wood Sash
	Metal Sash
X	Vinyl Sash
	Double Hung
	Horiz. Slide
	Casement
	Double Glass
	Patio Doors
X	Storms & Screens

(3) Roof

X	Gable		Gambrel
	Hip		Mansard
	Flat		Shed

X	Asphalt Shingle

Chimney:

(3) Roof (cont.)

	Eavestrough
X	Insulation
0	Front Overhang
0	Other Overhang

(4) Interior

X	Drywall		Plaster
	Paneled		Wood T&G

Trim & Decoration

	Ex	X	Ord		Min

Size of Closets

	Lg	X	Ord		Small

Doors:		Solid	X	H.C.	

(5) Floors

Kitchen:
Other: Linoleum
Other: Carpeted

(6) Ceilings

X	Drywall		

(7) Excavation

Basement: 0 S.F.
Crawl: 0 S.F.
Slab: 2646 S.F.
Height to Joists: 0.0

(8) Basement

	Conc. Block
	Poured Conc.
	Stone
	Treated Wood
	Concrete Floor

(9) Basement Finish

	Recreation SF
	Living SF
	Walkout Doors (B)
	No Floor SF
	Walkout Doors (A)

(10) Floor Support

Joists:
Unsupported Len:
Cntr.Sup:

(11) Heating/Cooling

X	Gas		Oil		Elec.
	Wood		Coal		Steam

	Forced Air w/o Ducts
X	Forced Air w/ Ducts
	Forced Hot Water
	Electric Baseboard
	Elec. Ceil. Radiant
	Radiant (in-floor)
	Electric Wall Heat
	Space Heater
	Wall/Floor Furnace
	Forced Heat & Cool
	Heat Pump
	No Heating/Cooling

	Central Air
	Wood Furnace

(12) Electric

150	Amps Service

No./Qual. of Fixtures

	Ex.	X	Ord.		Min

No. of Elec. Outlets

	Many	X	Ave.		Few

(13) Plumbing

	Average Fixture(s)
1	3 Fixture Bath
	2 Fixture Bath
	Softener, Auto
	Softener, Manual
	Solar Water Heat
	No Plumbing
	Extra Toilet
	Extra Sink
	Separate Shower
	Ceramic Tile Floor
	Ceramic Tile Wains
	Ceramic Tub Alcove
	Vent Fan

(14) Water/Sewer

	Public Water
	Public Sewer
	Water Well
	1000 Gal Septic
	2000 Gal Septic

Lump Sum Items:

(15) Built-ins

	Appliance Allow.
	Cook Top
	Dishwasher
	Garbage Disposal
	Bath Heater
	Vent Fan
	Hot Tub
	Unvented Hood
	Vented Hood
	Intercom
	Jacuzzi Tub
	Jacuzzi repl.Tub
	Oven
	Microwave
	Standard Range
	Self Clean Range
	Sauna
	Trash Compactor
	Central Vacuum
	Security System

(15) Fireplaces

	Interior 1 Story
	Interior 2 Story
	2nd/Same Stack
	Two Sided
	Exterior 1 Story
	Exterior 2 Story
	Prefab 1 Story
	Prefab 2 Story
	Heat Circulator
	Raised Hearth
	Wood Stove
	Direct-Vented Gas

Class: CD
Effec. Age: 1
Floor Area: 2,646
Total Base New : 347,587 E.C.F.
Total Depr Cost: 344,109 X 1.297
Estimated T.C.V: 446,309

(16) Porches/Decks

Area	Type
813	CCP (1 Story)
162	CCP (1 Story)
120	CCP (1 Story)

(17) Garage

Year Built: 2023
Car Capacity:
Class: CD
Exterior: Siding
Brick Ven.: 0
Stone Ven.: 0
Common Wall: 1 Wall
Foundation: 42 Inch
Finished ?:
Auto. Doors: 0
Mech. Doors: 0
Area: 1800
% Good: 0
Storage Area: 0
No Conc. Floor: 0

Bsmnt Garage:

Carport Area:
Roof:

Cost Est. for Res. Bldg: 1 Single Family POLE BARN HOUSE Cls CD Blt 2023
(11) Heating System: Forced Air w/ Ducts
Ground Area = 2646 SF Floor Area = 2646 SF.
Phy/Ab.Phy/Func/Econ/Comb. % Good=99/100/100/100/99
Building Areas

Stories	Exterior	Foundation	Size	Cost New	Depr. Cost
1 Story	Siding	Slab	2,646		
			Total:	263,819	261,180
Other Additions/Adjustments					
Porches					
CCP (1 Story)			162	4,021	3,981
CCP (1 Story)			120	3,064	3,033
CCP (1 Story)			813	21,162	20,950
Garages					
Class: CD Exterior: Siding Foundation: 42 Inch (Unfinished)					
Common Wall: 1 Wall			1	-2,529	-2,504
Base Cost			1800	58,050	57,469
			Totals:	347,587	344,109

Notes:

ECF (RESIDENTIAL) 1.297 => TCV: 446,309
25% Completed => Est. True Cash Value 2024 =

*** Information herein deemed reliable but not guaranteed***

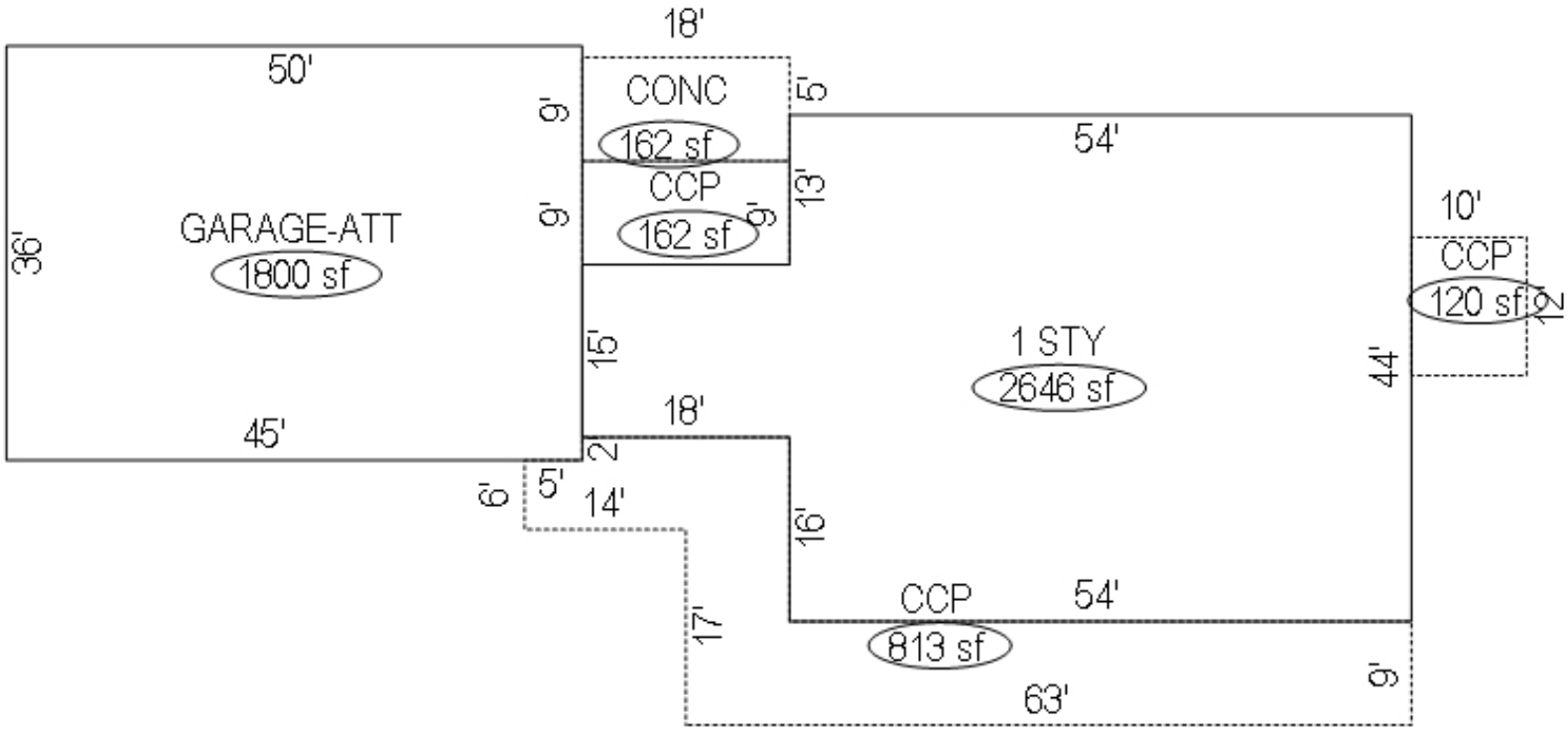

*** Information herein deemed reliable but not guaranteed***

Parcel Number: 2410-34-4401 Jurisdiction: GREENWOOD TWP County: WEXFORD Printed on 02/15/2024

Grantor	Grantee	Sale Price	Sale Date	Inst. Type	Terms of Sale	Liber & Page	Verified By	Prcnt. Trans.
MUMY, RALPH A.	HUFFMAN, DAVID & KIMBERLY	5,650	06/15/1995	WD	03-ARM'S LENGTH	344:627	DEED	0.0
TRAVISS, DENNIS K.	MUMY, RALPH A.	5,500	06/02/1990	LC	03-ARM'S LENGTH	320:627	DEED	0.0

Property Address

6203 N 33 RD

Owner's Name/Address

HUFFMAN, DAVID
& KIMBERLEY
25 SANDS ST
CORTLAND NY 13045

Tax Description

N 1/2 OF NE 1/4 OF SE 1/4 OF SE 1/4 --5 A.-- GW. SEC. 34 T24N R10W -MANTON-

Comments/Influences

Class: RESIDENTIAL-IMPROV Zoning:

School: MANTON CONSOLIDATED SCHOOLS

P.R.E. 0%

:

2024 Est TCV 54,449 TCV/TFA: 51.17

Building Permit(s)	Date	Number	Status

X	Improved		Vacant

	Public Improvements
	Dirt Road
X	Gravel Road
	Paved Road
	Storm Sewer
	Sidewalk
	Water
	Sewer
X	Electric
	Gas
	Curb
	Street Lights
	Standard Utilities
	Underground Utils.

	Topography of Site
	Level
X	Rolling
	Low
X	High
	Landscaped
	Swamp
X	Wooded
	Pond
	Waterfront
	Ravine
	Wetland
	Flood Plain
X	OPEN

Who	When	What
GLA	05/11/2020	INSPECTION
GLA	07/10/2019	INSPECTION
GLA	07/10/2019	INSPECTION

Land Value Estimates for Land Table 4010.LAND VALUES

Description	Frontage	Depth	* Factors * Front	Depth	Rate	%Adj.	Reason	Value
ACREAGE			4.700 Acres		5,091	100		23,928
ROW			0.250 Acres		0	100		0
			4.95 Total Acres		Total Est. Land Value =			23,928

Year	Land Value	Building Value	Assessed Value	Board of Review	Tribunal/ Other	Taxable Value
2024	12,000	15,200	27,200			16,010C
2023	10,300	12,300	22,600			15,248C
2022	7,400	10,200	17,600			14,522C
2021	8,500	8,700	17,200			14,059C

The Equalizer. Copyright (c) 1999 - 2009.
Licensed To: Township of Greenwood, County of Wexford, Michigan

*** Information herein deemed reliable but not guaranteed***

Building Type

	Single Family
X	Mobile Home
	Town Home
	Duplex
	A-Frame

X	Wood Frame

Building Style: SWT/DWT

Yr Built	Remodeled
0	0

Condition: Good

Room List

	Basement
	1st Floor
	2nd Floor
	Bedrooms

(1) Exterior

	Wood/Shingle
X	Aluminum/Vinyl
	Brick
X	Insulation

(2) Windows

	Many		Large
X	Avg.	X	Avg.
	Few		Small

	Wood Sash
	Metal Sash
X	Vinyl Sash
	Double Hung
	Horiz. Slide
	Casement
	Double Glass
	Patio Doors
X	Storms & Screens

(3) Roof

X	Gable		Gambrel
	Hip		Mansard
	Flat		Shed

X	Asphalt Shingle

Chimney:

(3) Roof (cont.)

	Eavestrough
X	Insulation
0	Front Overhang
0	Other Overhang

(4) Interior

X	Drywall		Plaster
	Paneled		Wood T&G

Trim & Decoration

	Ex	X	Ord		Min

Size of Closets

	Lg	X	Ord		Small

Doors:		Solid	X	H.C.	

(5) Floors

Kitchen:
Other: Linoleum
Other: Carpeted

(6) Ceilings

X	Drywall		

(7) Excavation

Basement: 0 S.F.
Crawl: 0 S.F.
Slab: 0 S.F.
Height to Joists: 0.0

(8) Basement

	Conc. Block
	Poured Conc.
	Stone
	Treated Wood
	Concrete Floor

(9) Basement Finish

	Recreation SF
	Living SF
	Walkout Doors (B)
	No Floor SF
	Walkout Doors (A)

(10) Floor Support

Joists:
Unsupported Len:
Cntr.Sup:

(11) Heating/Cooling

X	Gas		Oil		Elec.
	Wood		Coal		Steam

X	Forced Warm Air
	Wall Furnace
	Warm & Cool Air
	Heat Pump

	Central Air
	Wood Furnace

(12) Electric

150	Amps Service

No./Qual. of Fixtures

	Ex.	X	Ord.		Min

No. of Elec. Outlets

	Many	X	Ave.		Few

(13) Plumbing

	Average Fixture(s)
1	3 Fixture Bath
	2 Fixture Bath
	Softener, Auto
	Softener, Manual
	Solar Water Heat
	No Plumbing
	Extra Toilet
	Extra Sink
	Separate Shower
	Ceramic Tile Floor
	Ceramic Tile Wains
	Ceramic Tub Alcove
	Vent Fan

(14) Water/Sewer

	Public Water
	Public Sewer
1	Water Well
1	1000 Gal Septic
	2000 Gal Septic

Lump Sum Items:

(15) Built-ins

	Appliance Allow.
	Cook Top
	Dishwasher
	Garbage Disposal
	Bath Heater
	Vent Fan
	Hot Tub
	Unvented Hood
	Vented Hood
	Intercom
	Jacuzzi Tub
	Jacuzzi repl.Tub
	Oven
	Microwave
	Standard Range
	Self Clean Range
	Sauna
	Trash Compactor
	Central Vacuum
	Security System

(15) Fireplaces

	Interior 1 Story
	Interior 2 Story
	2nd/Same Stack
	Two Sided
	Exterior 1 Story
	Exterior 2 Story
	Prefab 1 Story
	Prefab 2 Story
	Heat Circulator
	Raised Hearth
	Wood Stove
	Direct-Vented Gas

Class: Fair
Effec. Age: 25
Floor Area:
Total Base New : 84,045 E.C.F.
Total Depr Cost: 23,532 X 1.297
Estimated T.C.V: 30,521

(16) Porches/Decks

Area	Type
9	Treated Wood

(17) Garage

Year Built:
Car Capacity:
Class: CD
Exterior: Pole
Brick Ven.: 0
Stone Ven.: 0
Common Wall: Detache
Foundation: 18 Inch
Finished ?:
Auto. Doors: 0
Mech. Doors: 0
Area: 768
% Good: 0
Storage Area: 0
No Conc. Floor: 0

Bsmnt Garage:

Carport Area:
Roof:

Cost Est. for Res. Bldg: 1 Mobile Home SWT/DWT Cls Fair Blt 0
(11) Heating System: Wall Furnace
Ground Area = 1064 SF Floor Area = 1064 SF.
Phy/Ab.Phy/Func/Econ/Comb. % Good=35/100/80/100/28
Functional Depreciation because of: JUSTSETTING THERE DEPR.

Building Areas

Type	Ext. Walls	Roof/Fnd.	Size	Cost New	Depr. Cost
Main Home	Ribbed	Metal	1064		
			Total:	52,977	14,834
Other Additions/Adjustments					
Skirting, Metal or Vinyl, Vertical			180	2,007	562
Water/Sewer					
1000 Gal Septic			1	4,582	1,283
Water Well, 100 Feet			1	5,680	1,590
Garages					
Class: CD Exterior: Pole (Unfinished)					
Base Cost			768	18,394	5,150
Deck					
Treated Wood			9	405	113
			Totals:	84,045	23,532

Notes:
ECF (RESIDENTIAL) 1.297 => TCV: 30,521

*** Information herein deemed reliable but not guaranteed***

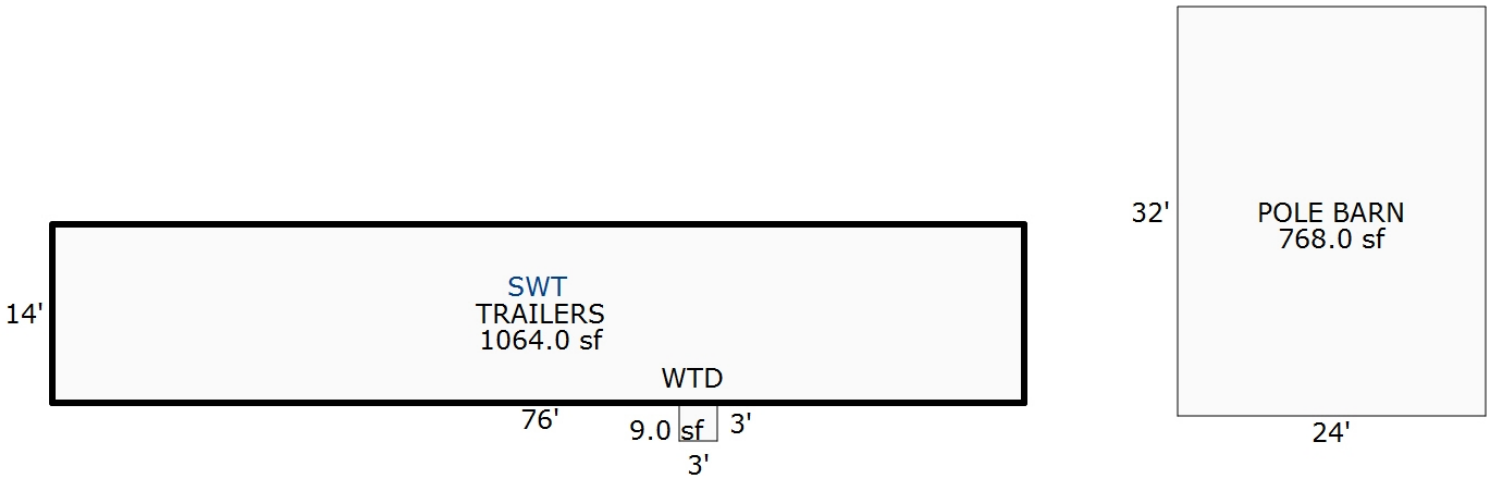

Sketch by Apex Sketch

*** Information herein deemed reliable but not guaranteed***

Parcel Number: 2410-34-4402 Jurisdiction: GREENWOOD TWP County: WEXFORD Printed on 02/15/2024

Grantor	Grantee	Sale Price	Sale Date	Inst. Type	Terms of Sale	Liber & Page	Verified By	Prcnt. Trans.
MILLER, AARON & MARY ANNE	STOLL, TIMOTHY & MIRIAN	30,000	07/25/2018	QC	03-ARM'S LENGTH	683/654	DEED	100.0
CUSENZA, JACQUELINE	MILLER, AARON & MARY ANNE	25,000	05/24/2012	WD	03-ARM'S LENGTH	649/648	DEED	100.0

Property Address

Owner's Name/Address

STOLL, TIMOTHY & MIRIAN
6351 N 33 RD
MANTON MI 49663

Tax Description

W 1/2 OF SE 1/4 OF SE 1/4 --20 A M/L--
GW. SEC. 34 T24N R10W -MANTON-

Comments/Influences

Class: RESIDENTIAL-VACANT Zoning:

School: MANTON CONSOLIDATED SCHOOLS

P.R.E. 0%

:

2024 Est TCV 62,400

Building Permit(s)	Date	Number	Status

	Improved	X	Vacant

	Public Improvements
	Dirt Road
X	Gravel Road
X	Paved Road
	Storm Sewer
	Sidewalk
	Water
	Sewer
X	Electric
	Gas
	Curb
	Street Lights
	Standard Utilities
	Underground Utils.

	Topography of Site
	Level
X	Rolling
X	Low
X	High
	Landscaped
	Swamp
	Wooded
	Pond
	Waterfront
	Ravine
	Wetland
	Flood Plain
X	OPEN

Who	When	What
GLA	05/11/2020	INSPECTION
GLA	07/10/2019	INSPECTION
GLA	07/10/2019	INSPECTION

Land Value Estimates for Land Table 4010.LAND VALUES

Description	Frontage	Depth	* Factors * Front	Depth	Rate	%Adj.	Reason	Value
ACREAGE			19.500 Acres		3,200	100		62,400
ROW			0.500 Acres		0	100		0
			20.00 Total Acres		Total Est. Land Value =			62,400

Year	Land Value	Building Value	Assessed Value	Board of Review	Tribunal/ Other	Taxable Value
2024	31,200	0	31,200			19,178C
2023	25,400	0	25,400			18,265C
2022	21,500	0	21,500			17,396C
2021	19,800	0	19,800			16,841C

The Equalizer. Copyright (c) 1999 - 2009.
Licensed To: Township of Greenwood, County of Wexford, Michigan

*** Information herein deemed reliable but not guaranteed***

Parcel Number: 2410-34-4403 Jurisdiction: GREENWOOD TWP County: WEXFORD Printed on 02/15/2024

Grantor	Grantee	Sale Price	Sale Date	Inst. Type	Terms of Sale	Liber & Page	Verified By	Prcnt. Trans.
CONTIMORTGAGE CORP.	MIKUSKA, RUDY & S GOODACRE	43,277	07/09/2001	WD	03-ARM'S LENGTH	381:852	DEED	0.0
FOOR, JOHN & GLENNA	CONTIMORTGAGE CORP	45,903	01/14/2000	SD	32-SPLIT VACANT	372:104	DEED	0.0

Property Address
6109 N 33 RD

Owner's Name/Address
MIKUSKA, RUDY J
& SANDRA L GOODACRE
6109 N 33 RD
MANTON MI 49663

Tax Description
S 1/2 OF N 1/2 OF E 1/2 OF SE 1/4 OF SE 1/4 --5 A.-- GW. SEC. 34 T24N R10W -MANTON-

Comments/Influences

The Equalizer. Copyright (c) 1999 - 2009. Licensed To: Township of Greenwood, County of Wexford, Michigan

Class: RESIDENTIAL-IMPROV Zoning:
School: MANTON CONSOLIDATED SCHOOLS
P.R.E. 100% / /
:
2024 Est TCV 139,710 TCV/TFA: 116.62

Building Permit(s)	Date	Number	Status
RESIDENTIAL - NEW	11/29/2004	PE16614	
RESIDENTIAL - REMODEL	10/01/2003	PB11882	
RESIDENTIAL - REMODEL	07/15/2003	PB11700	

X Improved | Vacant

	Public Improvements
	Dirt Road
X	Gravel Road
	Paved Road
	Storm Sewer
	Sidewalk
	Water
	Sewer
X	Electric
	Gas
	Curb
	Street Lights
	Standard Utilities
	Underground Utils.

	Topography of Site
	Level
X	Rolling
	Low
X	High
	Landscaped
	Swamp
X	Wooded
	Pond
	Waterfront
	Ravine
	Wetland
	Flood Plain
X	OPEN

Who	When	What
GLA	05/11/2020	INSPECTION
GLA	07/10/2019	INSPECTION
GLA	07/10/2019	INSPECTION

Land Value Estimates for Land Table 4010.LAND VALUES

Description	Frontage	Depth	* Factors * Front	Depth	Rate	%Adj.	Reason	Value
ACREAGE			4.750 Acres		5,095	100		24,200
ROW			0.250 Acres		0	100		0
			5.00 Total Acres		Total Est. Land Value =			24,200

Year	Land Value	Building Value	Assessed Value	Board of Review	Tribunal/ Other	Taxable Value
2024	12,100	57,800	69,900			37,691C
2023	10,400	47,400	57,800			35,897C
2022	7,400	40,200	47,600			34,188C
2021	8,500	40,900	49,400			33,096C

*** Information herein deemed reliable but not guaranteed***

Building Type

X	Single Family
	Mobile Home
	Town Home
	Duplex
	A-Frame
X	Wood Frame

Building Style: PLAIN

Yr Built	Remodeled
0	0

Condition: Good

Room List

	Basement
	1st Floor
	2nd Floor
	Bedrooms

(1) Exterior

X	Wood/Shingle
	Aluminum/Vinyl
	Brick
X	Insulation

(2) Windows

	Many		Large
X	Avg.	X	Avg.
	Few		Small

X	Wood Sash
	Metal Sash
	Vinyl Sash
	Double Hung
	Horiz. Slide
	Casement
	Double Glass
	Patio Doors
X	Storms & Screens

(3) Roof

X	Gable		Gambrel
	Hip		Mansard
	Flat		Shed

X	Asphalt Shingle

Chimney:

(3) Roof (cont.)

	Eavestrough
X	Insulation
0	Front Overhang
0	Other Overhang

(4) Interior

	Drywall	X	Plaster
	Paneled		Wood T&G

Trim & Decoration

	Ex	X	Ord		Min

Size of Closets

	Lg	X	Ord		Small

Doors:		Solid	X	H.C.	

(5) Floors

Kitchen:
Other: Linoleum
Other: Carpeted

(6) Ceilings

X	Plaster

(7) Excavation

Basement: 480 S.F.
Crawl: 0 S.F.
Slab: 358 S.F.
Height to Joists: 0.0

(8) Basement

	Conc. Block
	Poured Conc.
	Stone
	Treated Wood
	Concrete Floor

(9) Basement Finish

	Recreation SF
	Living SF
	Walkout Doors (B)
	No Floor SF
	Walkout Doors (A)

(10) Floor Support

Joists:
Unsupported Len:
Cntr.Sup:

(11) Heating/Cooling

X	Gas		Oil		Elec.
	Wood		Coal		Steam

	Forced Air w/o Ducts
X	Forced Air w/ Ducts
	Forced Hot Water
	Electric Baseboard
	Elec. Ceil. Radiant
	Radiant (in-floor)
	Electric Wall Heat
	Space Heater
	Wall/Floor Furnace
	Forced Heat & Cool
	Heat Pump
	No Heating/Cooling

	Central Air
	Wood Furnace

(12) Electric

100	Amps Service

No./Qual. of Fixtures

	Ex.	X	Ord.		Min

No. of Elec. Outlets

	Many	X	Ave.		Few

(13) Plumbing

	Average Fixture(s)
1	3 Fixture Bath
	2 Fixture Bath
	Softener, Auto
	Softener, Manual
	Solar Water Heat
	No Plumbing
	Extra Toilet
	Extra Sink
	Separate Shower
	Ceramic Tile Floor
	Ceramic Tile Wains
	Ceramic Tub Alcove
	Vent Fan

(14) Water/Sewer

	Public Water
	Public Sewer
1	Water Well
1	1000 Gal Septic
	2000 Gal Septic

Lump Sum Items:

(15) Built-ins

	Appliance Allow.
	Cook Top
	Dishwasher
	Garbage Disposal
	Bath Heater
	Vent Fan
	Hot Tub
	Unvented Hood
	Vented Hood
	Intercom
	Jacuzzi Tub
	Jacuzzi repl.Tub
	Oven
	Microwave
	Standard Range
	Self Clean Range
	Sauna
	Trash Compactor
	Central Vacuum
	Security System

(15) Fireplaces

	Interior 1 Story
	Interior 2 Story
	2nd/Same Stack
	Two Sided
	Exterior 1 Story
	Exterior 2 Story
	Prefab 1 Story
	Prefab 2 Story
	Heat Circulator
	Raised Hearth
	Wood Stove
	Direct-Vented Gas

Class: D
Effec. Age: 49
Floor Area: 1,198
Total Base New : 174,698 E.C.F.
Total Depr Cost: 89,059 X 1.297
Estimated T.C.V: 115,510

(16) Porches/Decks

Area	Type
171	WGEP (1 Story)

(17) Garage

Year Built:
Car Capacity:
Class: D
Exterior: Pole
Brick Ven.: 0
Stone Ven.: 0
Common Wall: Detache
Foundation: 18 Inch
Finished ?:
Auto. Doors: 0
Mech. Doors: 0
Area: 1680
% Good: 0
Storage Area: 0
No Conc. Floor: 1680

Bsmnt Garage:

Carport Area:
Roof:

Cost Est. for Res. Bldg: 1 Single Family PLAIN Cls D Blt 0
(11) Heating System: Forced Air w/ Ducts
Ground Area = 838 SF Floor Area = 1198 SF.
Phy/Ab.Phy/Func/Econ/Comb. % Good=51/100/100/100/51
Building Areas

Stories	Exterior	Foundation	Size	Cost New	Depr. Cost	
1.75 Story	Siding	Basement	480			
1 Story	Siding	Slab	288			
1 Story	Siding	Slab	70			
			Total:	129,730	66,163	
Other Additions/Adjustments						
Water/Sewer						
1000 Gal Septic			1	4,293	2,189	
Water Well, 100 Feet			1	5,545	2,828	
Porches						
WGEP (1 Story)			171	11,500	5,865	
Garages						
Class: D Exterior: Pole (Unfinished)						
Base Cost			1680	32,306	16,476	
No Concrete Floor			1680	-9,425	-4,807	
Local Cost Items						
SHED			96	749	345	*4
			Totals:	174,698	89,059	

Notes:

ECF (RESIDENTIAL) 1.297 => TCV: 115,510

*** Information herein deemed reliable but not guaranteed***

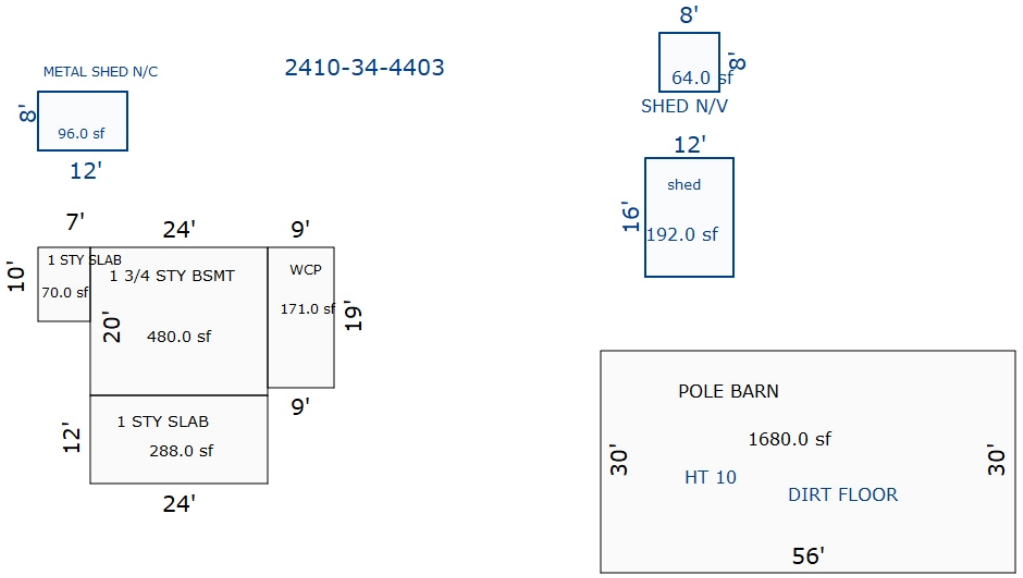

Sketch by Apex Sketch

*** Information herein deemed reliable but not guaranteed***

Parcel Number: 2410-34-4404 Jurisdiction: GREENWOOD TWP County: WEXFORD Printed on 02/15/2024

Grantor	Grantee	Sale Price	Sale Date	Inst. Type	Terms of Sale	Liber & Page	Verified By	Prcnt. Trans.
OTTO, KRISTY L	MIKUSKA, RUDY JAMES	10,500	09/09/2020	QC	03-ARM'S LENGTH	690/645	AGENT	0.0
OTTO, JASON & KRISTY	OTTO, KRISTY	0	04/28/2017	OTH	06-COURT JUDGEMENT		AGENT	0.0
OTTO, WILLIAM & APRIL	OTTO, JASON & KRISTY	1	08/28/2002	QC	09-FAMILY	437:635	DEED	0.0
TRAVISS, DANIEL & SUE ANN	OTTO, WILLIAM & APRIL	14,750	04/25/2001	WD	08-ESTATE	380:331	DEED	0.0

Property Address

Owner's Name/Address

MIKUSKA, RUDY JAMES
6109 N 33RD
MANTON MI 49663

Tax Description

W 1/2 OF SE 1/4 OF SE 1/4 OF SE 1/4 5 A M/L GW. SEC. 34 T24N R10W -MANTON-

Comments/Influences

The Equalizer. Copyright (c) 1999 - 2009. Licensed To: Township of Greenwood, County of Wexford, Michigan

Class: RESIDENTIAL-VACANT Zoning:

School: MANTON CONSOLIDATED SCHOOLS

P.R.E. 100% 04/30/2007

:

2024 Est TCV 24,200

Building Permit(s)	Date	Number	Status

	Improved	X	Vacant

	Public Improvements
X	Dirt Road
X	Gravel Road
	Paved Road
	Storm Sewer
	Sidewalk
	Water
	Sewer
X	Electric
	Gas
	Curb
	Street Lights
	Standard Utilities
	Underground Utils.

	Topography of Site
	Level
X	Rolling
	Low
	High
	Landscaped
	Swamp
	Wooded
	Pond
	Waterfront
	Ravine
	Wetland
	Flood Plain
X	OPEN/PINES

Who	When	What
GLA	05/11/2020	INSPECTION
GLA	07/10/2019	INSPECTION
GLA	07/10/2019	INSPECTION

Land Value Estimates for Land Table 4010.LAND VALUES

Description	Frontage	Depth	* Factors * Front	Depth	Rate	%Adj.	Reason	Value
ACREAGE			4.750 Acres		5,095	100		24,200
ROW			0.250 Acres		0	100		0
			5.00 Total Acres		Total Est. Land Value =			24,200

Year	Land Value	Building Value	Assessed Value	Board of Review	Tribunal/ Other	Taxable Value
2024	12,100	0	12,100			6,345C
2023	10,400	0	10,400			6,043C
2022	7,400	0	7,400			5,756C
2021	8,500	0	8,500			5,573C

*** Information herein deemed reliable but not guaranteed***

Parcel Number: 2410-34-4405 Jurisdiction: GREENWOOD TWP County: WEXFORD Printed on 02/15/2024

Grantor	Grantee	Sale Price	Sale Date	Inst. Type	Terms of Sale	Liber & Page	Verified By	Prcnt. Trans.
MESSERSMITH, BRITTANY &		0	03/26/2022	QC	21-NOT USED/OTHER		DEED	0.0
MESSERSMITH, BRITTANY &	MESSERSMITH, BRITTANY & LU	0	03/26/2022	QC	21-NOT USED/OTHER	693/563	DEED	0.0
MESSERSMITH, NATHANAEL	MESSERSMITH, BRITTANY &	0	07/17/2019	QC	09-FAMILY	6851/500	DEED	0.0
OTTO, JASON R	MESSERSMITH, NATHANAEL	150,000	07/09/2019	WD	03-ARM'S LENGTH	685 /1212	DEED	100.0

Property Address

6095 N 33 RD

Owner's Name/Address

MESSERSMITH, BRITTANY & LUANA J
6095 N 33 RD
MANTON MI 49663

Tax Description

NE 1/4 OF S 1/2 OF E 1/2 OF SE 1/4 OF SE 1/4 2.5 A M/L GW SEC 34 T24N R10W -MANTON- [[ASSESSED W/ 34-4404 '03

Comments/Influences

The Equalizer. Copyright (c) 1999 - 2009. Licensed To: Township of Greenwood, County of Wexford, Michigan

Class: RESIDENTIAL-IMPROV Zoning:

School: MANTON CONSOLIDATED SCHOOLS

P.R.E. 100% 07/15/2019

:

2024 Est TCV 246,838 TCV/TFA: 151.25

Building Permit(s)	Date	Number	Status
Deck	05/26/2009	PB09-0116	
RESIDENTIAL - NEW	07/16/2003	PM6852	
RESIDENTIAL - NEW	05/19/2003	PM6722	
RESIDENTIAL - NEW	05/19/2003	PP3007	

X	Improved		Vacant

	Public Improvements
X	Dirt Road
X	Gravel Road
	Paved Road
	Storm Sewer
	Sidewalk
	Water
	Sewer
X	Electric
	Gas
	Curb
	Street Lights
	Standard Utilities
	Underground Utils.

	Topography of Site
X	Level
	Rolling
	Low
	High
	Landscaped
	Swamp
	Wooded
	Pond
	Waterfront
	Ravine
	Wetland
	Flood Plain
X	OPEN/PINES

Who	When	What
GLA	05/11/2020	INSPECTION
GLA	07/10/2019	INSPECTION
GLA	07/10/2019	INSPECTION

Land Value Estimates for Land Table 4010.LAND VALUES

Description	Frontage	Depth	* Factors * Front	Depth	Rate	%Adj.	Reason	Value
ACREAGE			2.250 Acres		5,546	100		12,479
ROW			0.250 Acres		0	100		0
			2.50 Total Acres		Total Est. Land Value =			12,479

Year	Land Value	Building Value	Assessed Value	Board of Review	Tribunal/ Other	Taxable Value
2024	6,200	117,200	123,400			94,374C
2023	6,200	95,500	101,700			89,880C
2022	5,100	80,500	85,600			85,600S
2021	5,100	81,300	86,400			86,400S

*** Information herein deemed reliable but not guaranteed***

Building Type

X	Single Family
	Mobile Home
	Town Home
	Duplex
	A-Frame
X	Wood Frame

Building Style: PLAIN

Yr Built	Remodeled
2004	0

Condition: Average

Room List

	Basement
	1st Floor
	2nd Floor
	Bedrooms

(1) Exterior

	Wood/Shingle
	Aluminum/Vinyl
	Brick
X	Vinyl
	Insulation

(2) Windows

X	Many		Large
	Avg.	X	Avg.
	Few		Small

	Wood Sash
	Metal Sash
X	Vinyl Sash
X	Double Hung
	Horiz. Slide
	Casement
	Double Glass
X	Patio Doors
X	Storms & Screens

(3) Roof

X	Gable		Gambrel
	Hip		Mansard
	Flat		Shed

X	Asphalt Shingle

Chimney:

(3) Roof (cont.)

	Eavestrough
	Insulation
0	Front Overhang
0	Other Overhang

(4) Interior

X	Drywall		Plaster
	Paneled		Wood T&G

Trim & Decoration

	Ex	X	Ord		Min

Size of Closets

	Lg	X	Ord		Small

Doors:		Solid	X	H.C.	

(5) Floors

Kitchen:
Other:
Other:

(6) Ceilings

X	Drywall		

(7) Excavation

Basement: 816 S.F.
Crawl: 0 S.F.
Slab: 0 S.F.
Height to Joists: 0.0

(8) Basement

	Conc. Block
	Poured Conc.
	Stone
	Treated Wood
	Concrete Floor

(9) Basement Finish

	Recreation SF
	Living SF
	Walkout Doors (B)
	No Floor SF
	Walkout Doors (A)

(10) Floor Support

Joists:
Unsupported Len:
Cntr.Sup:

(11) Heating/Cooling

X	Gas		Oil		Elec.
	Wood		Coal		Steam

	Forced Air w/o Ducts
X	Forced Air w/ Ducts
	Forced Hot Water
	Electric Baseboard
	Elec. Ceil. Radiant
	Radiant (in-floor)
	Electric Wall Heat
	Space Heater
	Wall/Floor Furnace
	Forced Heat & Cool
	Heat Pump
	No Heating/Cooling
	Central Air
	Wood Furnace

(12) Electric

0	Amps Service

No./Qual. of Fixtures

	Ex.	X	Ord.		Min

No. of Elec. Outlets

	Many	X	Ave.		Few

(13) Plumbing

2	Average Fixture(s)
	3 Fixture Bath
	2 Fixture Bath
	Softener, Auto
	Softener, Manual
	Solar Water Heat
	No Plumbing
	Extra Toilet
	Extra Sink
	Separate Shower
	Ceramic Tile Floor
	Ceramic Tile Wains
	Ceramic Tub Alcove
	Vent Fan

(14) Water/Sewer

	Public Water
	Public Sewer
1	Water Well
1	1000 Gal Septic
	2000 Gal Septic

Lump Sum Items:

(15) Built-ins

	Appliance Allow.
	Cook Top
	Dishwasher
	Garbage Disposal
	Bath Heater
	Vent Fan
	Hot Tub
	Unvented Hood
	Vented Hood
	Intercom
	Jacuzzi Tub
	Jacuzzi repl.Tub
	Oven
	Microwave
	Standard Range
	Self Clean Range
	Sauna
	Trash Compactor
	Central Vacuum
	Security System

(15) Fireplaces

	Interior 1 Story
	Interior 2 Story
	2nd/Same Stack
	Two Sided
	Exterior 1 Story
	Exterior 2 Story
	Prefab 1 Story
	Prefab 2 Story
	Heat Circulator
	Raised Hearth
	Wood Stove
	Direct-Vented Gas

Class: C
Effec. Age: 21
Floor Area: 1,632
Total Base New : 228,723 E.C.F.
Total Depr Cost: 180,693 X 1.297
Estimated T.C.V: 234,359

(16) Porches/Decks

Area	Type
128	Treated Wood
384	Treated Wood

(17) Garage

Year Built:
Car Capacity:
Class:
Exterior:
Brick Ven.:
Stone Ven.:
Common Wall:
Foundation:
Finished ?:
Auto. Doors:
Mech. Doors:
Area:
% Good:
Storage Area:
No Conc. Floor:

Bsmnt Garage:

Carport Area:
Roof:

Cost Est. for Res. Bldg: 1 Single Family PLAIN Cls C Blt 2004
(11) Heating System: Forced Air w/ Ducts
Ground Area = 816 SF Floor Area = 1632 SF.
Phy/Ab.Phy/Func/Econ/Comb. % Good=79/100/100/100/79
Building Areas

Stories	Exterior	Foundation	Size	Cost New	Depr. Cost
2 Story	Siding	Basement	816		
			Total:	203,790	160,995
Other Additions/Adjustments					
Plumbing					
3 Fixture Bath			1	4,678	3,696
Water/Sewer					
1000 Gal Septic			1	4,899	3,870
Water Well, 100 Feet			1	5,849	4,621
Deck					
Treated Wood			128	3,110	2,457
Treated Wood			384	6,397	5,054
			Totals:	228,723	180,693

Notes:

ECF (RESIDENTIAL) 1.297 => TCV: 234,359

*** Information herein deemed reliable but not guaranteed***

Sketch by Apex Sketch

*** Information herein deemed reliable but not guaranteed***

Parcel Number: 2410-34-4406 Jurisdiction: GREENWOOD TWP County: WEXFORD Printed on 02/15/2024

Grantor	Grantee	Sale Price	Sale Date	Inst. Type	Terms of Sale	Liber & Page	Verified By	Prcnt. Trans.

Property Address

Owner's Name/Address

OTTO, JASON R
& KRISTY L
216 2ND ST
MANTON MI 49663

Tax Description

SE 1/4 OF S 1/2 OF E 1/2 OF SE 1/4 OF SE 1/4 2.5 A M/L GW SEC 34 T24N R10W -MANTON- [[ASSESSED W/ 34-4404 '03

Comments/Influences

Class: RESIDENTIAL-VACANT Zoning:

School: MANTON CONSOLIDATED SCHOOLS

P.R.E. 0%

:

2024 Est TCV 12,479

Building Permit(s)	Date	Number	Status

	Improved	X	Vacant

	Public Improvements
X	Dirt Road
X	Gravel Road
	Paved Road
	Storm Sewer
	Sidewalk
	Water
	Sewer
X	Electric
	Gas
	Curb
	Street Lights
	Standard Utilities
	Underground Utils.

	Topography of Site
X	Level
	Rolling
	Low
	High
	Landscaped
	Swamp
	Wooded
	Pond
	Waterfront
	Ravine
	Wetland
	Flood Plain
X	OPEN/PINES

Who	When	What
GLA	05/11/2020	INSPECTION
GLA	07/10/2019	INSPECTION
GLA	07/10/2019	INSPECTION

Land Value Estimates for Land Table 4010.LAND VALUES

Description	Frontage	Depth	* Factors * Front	Depth	Rate	%Adj.	Reason	Value
ACREAGE			2.250 Acres		5,546	100		12,479
ROW			0.250 Acres		0	100		0
			2.50 Total Acres		Total Est. Land Value =			12,479

Year	Land Value	Building Value	Assessed Value	Board of Review	Tribunal/ Other	Taxable Value
2024	6,200	0	6,200			3,778C
2023	6,200	0	6,200			3,599C
2022	5,100	0	5,100			3,428C
2021	5,100	0	5,100			3,319C

The Equalizer. Copyright (c) 1999 - 2009.
Licensed To: Township of Greenwood, County of Wexford, Michigan

*** Information herein deemed reliable but not guaranteed***

Parcel Number: 2410-35-1101 Jurisdiction: GREENWOOD TWP County: WEXFORD Printed on 02/15/2024

Grantor	Grantee	Sale Price	Sale Date	Inst. Type	Terms of Sale	Liber & Page	Verified By	Prcnt. Trans.
DARNELL, DANIEL W		0	06/16/2016	WD	16-LC PAYOFF		DEED	0.0
MCCANN JAMES (PERSONAL REP	DARNELL	0	05/06/2016	OTH	06-COURT JUDGEMENT	6772/910	DEED	0.0
STRONG, DENISE A.	DARNELL, DANIEL W	21,000	03/01/2010	LC	03-ARM'S LENGTH	628/1831	DEED	100.0
STRONG, RICHARD W	STRONG, DENISE	0	06/21/2006	QC	09-FAMILY	592/410	DEED	0.0

Property Address

Owner's Name/Address

DARNELL, DANIEL W
6953 N 35 RD
MANTON MI 49663

Tax Description

THAT PART OF NE 1/4 OF NE 1/4 LYING N OF A LINE COM 293.08 FT S OF NE COR OF SEC & EXTENDING W TO A PT 331 FT E OF 1/8-LINE & ENDING. AKA PARCEL "A" L66, PG 764
--6.405 A.-- GW. SEC. 35 T24N R10W
-MANTON-

Comments/Influences

Default Comments

The Equalizer. Copyright (c) 1999 - 2009.
Licensed To: Township of Greenwood, County of Wexford, Michigan

Class: RESIDENTIAL-IMPROV Zoning:

School: MANTON CONSOLIDATED SCHOOLS

P.R.E. 100% 04/30/2010

:

2024 Est TCV 43,310 TCV/TFA: 0.00

Building Permit(s)	Date	Number	Status

X	Improved		Vacant

	Public Improvements
	Dirt Road
X	Gravel Road
	Paved Road
	Storm Sewer
	Sidewalk
	Water
	Sewer
X	Electric
	Gas
	Curb
	Street Lights
	Standard Utilities
	Underground Utils.

	Topography of Site
X	Level
	Rolling
X	Low
	High
	Landscaped
	Swamp
X	Wooded
	Pond
	Waterfront
	Ravine
	Wetland
	Flood Plain
X	OPEN

Who	When	What
GLA	05/11/2020	INSPECTION
GLA	07/10/2019	INSPECTION
GLA	07/10/2019	INSPECTION

Land Value Estimates for Land Table 4010.LAND VALUES

Description	Frontage	Depth	* Factors * Front	Depth	Rate	%Adj.	Reason	Value
ACREAGE			6.183 Acres		5,112	100		31,608
ROW			0.222 Acres		0	100		0
			6.41 Total Acres		Total Est. Land Value =			31,608

Year	Land Value	Building Value	Assessed Value	Board of Review	Tribunal/ Other	Taxable Value
2024	15,800	5,900	21,700			7,967C
2023	11,400	4,800	16,200			7,588C
2022	9,300	4,100	13,400			7,227C
2021	10,500	4,200	14,700			6,997C

*** Information herein deemed reliable but not guaranteed***

Building Type

X	Single Family
	Mobile Home
	Town Home
	Duplex
	A-Frame
X	Wood Frame

Building Style: PLAIN

Yr Built	Remodeled
0	0

Condition: Good

Room List

	Basement
	1st Floor
	2nd Floor
	Bedrooms

(1) Exterior

X	Wood/Shingle
	Aluminum/Vinyl
	Brick
X	Insulation

(2) Windows

X	Many Avg. Few	X	Large Avg. Small

	Wood Sash
	Metal Sash
X	Vinyl Sash
	Double Hung
	Horiz. Slide
	Casement
	Double Glass
	Patio Doors
X	Storms & Screens

(3) Roof

X	Gable		Gambrel
	Hip		Mansard
	Flat		Shed

X	Asphalt Shingle

Chimney:

(3) Roof (cont.)

	Eavestrough
X	Insulation
0	Front Overhang
0	Other Overhang

(4) Interior

X	Drywall Paneled		Plaster Wood T&G

Trim & Decoration

	Ex	X	Ord		Min

Size of Closets

	Lg	X	Ord		Small

Doors: Solid X H.C.

(5) Floors

Kitchen:
Other: Linoleum
Other: Carpeted

(6) Ceilings

X	Drywall

(7) Excavation

Basement: 0 S.F.
Crawl: 0 S.F.
Slab: 0 S.F.
Height to Joists: 0.0

(8) Basement

	Conc. Block
	Poured Conc.
	Stone
	Treated Wood
	Concrete Floor

(9) Basement Finish

	Recreation SF
	Living SF
	Walkout Doors (B)
	No Floor SF
	Walkout Doors (A)

(10) Floor Support

Joists:
Unsupported Len:
Cntr.Sup:

(11) Heating/Cooling

X	Gas Wood		Oil Coal		Elec. Steam

	Forced Air w/o Ducts
X	Forced Air w/ Ducts
	Forced Hot Water
	Electric Baseboard
	Elec. Ceil. Radiant
	Radiant (in-floor)
	Electric Wall Heat
	Space Heater
	Wall/Floor Furnace
	Forced Heat & Cool
	Heat Pump
	No Heating/Cooling

	Central Air
	Wood Furnace

(12) Electric

150	Amps Service

No./Qual. of Fixtures

	Ex.	X	Ord.		Min

No. of Elec. Outlets

	Many	X	Ave.		Few

(13) Plumbing

1	Average Fixture(s)
	3 Fixture Bath
	2 Fixture Bath
	Softener, Auto
	Softener, Manual
	Solar Water Heat
	No Plumbing
	Extra Toilet
	Extra Sink
	Separate Shower
	Ceramic Tile Floor
	Ceramic Tile Wains
	Ceramic Tub Alcove
	Vent Fan

(14) Water/Sewer

	Public Water
	Public Sewer
	Water Well
	1000 Gal Septic
	2000 Gal Septic

Lump Sum Items:

(15) Built-ins

	Appliance Allow.
	Cook Top
	Dishwasher
	Garbage Disposal
	Bath Heater
	Vent Fan
	Hot Tub
	Unvented Hood
	Vented Hood
	Intercom
	Jacuzzi Tub
	Jacuzzi repl.Tub
	Oven
	Microwave
	Standard Range
	Self Clean Range
	Sauna
	Trash Compactor
	Central Vacuum
	Security System

(15) Fireplaces

	Interior 1 Story
	Interior 2 Story
	2nd/Same Stack
	Two Sided
	Exterior 1 Story
	Exterior 2 Story
	Prefab 1 Story
	Prefab 2 Story
	Heat Circulator
	Raised Hearth
	Wood Stove
	Direct-Vented Gas

Class: D
Effec. Age: 54
Floor Area: 0
Total Base New : 19,613 E.C.F.
Total Depr Cost: 9,022 X 1.297
Estimated T.C.V: 11,702

(16) Porches/Decks

Area	Type

(17) Garage

Year Built:
Car Capacity:
Class: D
Exterior: Pole
Brick Ven.: 0
Stone Ven.: 0
Common Wall: Detache
Foundation: 18 Inch
Finished ?:
Auto. Doors: 0
Mech. Doors: 0
Area: 1440
% Good: 0
Storage Area: 0
No Conc. Floor: 1440

Bsmnt Garage:

Carport Area:
Roof:

Cost Est. for Res. Bldg: 1 Single Family PLAIN Cls D Blt 0
(11) Heating System: Forced Air w/ Ducts
Ground Area = 0 SF Floor Area = 0 SF.
Phy/Ab.Phy/Func/Econ/Comb. % Good=46/100/100/100/46
Building Areas

Stories	Exterior	Foundation	Size	Cost New	Depr. Cost
Other Additions/Adjustments					
Garages					
Class: D Exterior: Pole (Unfinished)					
Base Cost			1440	27,691	12,738
No Concrete Floor			1440	-8,078	-3,716
			Totals:	19,613	9,022

Notes:
ECF (RESIDENTIAL) 1.297 => TCV: 11,702

*** Information herein deemed reliable but not guaranteed***

2410-35-1101

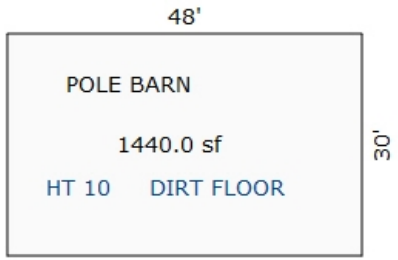

Sketch by Apex Sketch

*** Information herein deemed reliable but not guaranteed***

Parcel Number: 2410-35-1102 Jurisdiction: GREENWOOD TWP County: WEXFORD Printed on 02/15/2024

Grantor	Grantee	Sale Price	Sale Date	Inst. Type	Terms of Sale	Liber & Page	Verified By	Prcnt. Trans.

Property Address
6761 N 35 RD

Owner's Name/Address
GREENWOOD TOWNSHIP 6761 N 35 RD MANTON MI 49663

Tax Description
S 10 RDS OF E 16 RDS OF NE 1/4 OF NE 1/4 --1 A M/L-- GW. SEC. 35 T24N R10W -MANTON-

Comments/Influences

The Equalizer. Copyright (c) 1999 - 2009.
Licensed To: Township of Greenwood, County of Wexford, Michigan

Class: COMMERCIAL-VACANT Zoning:

School: MANTON CONSOLIDATED SCHOOLS

P.R.E. 0%

:

2024 Est TCV 0

Building Permit(s)	Date	Number	Status
OTHER	08/25/2022	PB22-0249	COMPLETE
COMMERCIAL - REMODEL	09/10/2020	PB20-0167	ENTERED
COMMERCIAL - NEW	04/12/2002	PM5810	

	Improved	X	Vacant

	Public Improvements
	Dirt Road
X	Gravel Road
	Paved Road
	Storm Sewer
	Sidewalk
	Water
	Sewer
X	Electric
	Gas
	Curb
	Street Lights
	Standard Utilities
	Underground Utils.

	Topography of Site
X	Level
X	Rolling
	Low
	High
	Landscaped
	Swamp
X	Wooded
	Pond
	Waterfront
	Ravine
	Wetland
	Flood Plain
X	OPEN/PINES

Who	When	What
GLA	05/13/2021	INSPECTION
GLA	07/10/2019	INSPECTION
GLA	07/10/2019	INSPECTION

Land Value Estimates for Land Table 4010.LAND VALUES

Description	Frontage	Depth	* Factors * Front	Depth	Rate	%Adj.	Reason	Value
ACREAGE			0.800 Acres		10,953	100		8,762
ROW			0.200 Acres		0	100		0
			1.00 Total Acres		Total Est. Land Value =			8,762

Year	Land Value	Building Value	Assessed Value	Board of Review	Tribunal/ Other	Taxable Value
2024	EXEMPT	EXEMPT	EXEMPT			EXEMPT
2023	EXEMPT	EXEMPT	EXEMPT			EXEMPT
2022	0	0	0			0
2021	0	0	0			0

*** Information herein deemed reliable but not guaranteed***

Parcel Number: 2410-35-1103 Jurisdiction: GREENWOOD TWP County: WEXFORD Printed on 02/15/2024

Grantor	Grantee	Sale Price	Sale Date	Inst. Type	Terms of Sale	Liber & Page	Verified By	Prcnt. Trans.

Property Address

Owner's Name/Address

LEHMAN, MICHAEL C.
& CAROL L. J.
4644 E 12 RD
MANTON MI 49663

Tax Description

W 331 FT OF NE 1/4 OF NE 1/4 AKA PARCEL "D" REG SURVEY L66, PG 764 --10.10 A. M/L-- GW. SEC. 35 T24N R10W -MANTON-

Comments/Influences

The Equalizer. Copyright (c) 1999 - 2009. Licensed To: Township of Greenwood, County of Wexford, Michigan

Class: RESIDENTIAL-VACANT Zoning:

School: MANTON CONSOLIDATED SCHOOLS

P.R.E. 100% 03/27/2023

:

2024 Est TCV 45,822

Building Permit(s)	Date	Number	Status

	Improved	X	Vacant

	Public Improvements
X	Dirt Road
X	Gravel Road
	Paved Road
	Storm Sewer
	Sidewalk
	Water
	Sewer
X	Electric
	Gas
	Curb
	Street Lights
	Standard Utilities
	Underground Utils.

	Topography of Site
X	Level
	Rolling
	Low
	High
	Landscaped
	Swamp
	Wooded
	Pond
	Waterfront
	Ravine
	Wetland
	Flood Plain
X	OPEN/PINES

Who	When	What
GLA	05/11/2020	INSPECTION
GLA	07/10/2019	INSPECTION
GLA	07/10/2019	INSPECTION

Land Value Estimates for Land Table 4010.LAND VALUES

Description	Frontage	Depth	* Factors * Front	Depth	Rate	%Adj.	Reason	Value
ACREAGE			9.850 Acres		4,652	100		45,822
ROW			0.250 Acres		0	100		0
			10.10 Total Acres		Total Est. Land Value =			45,822

Year	Land Value	Building Value	Assessed Value	Board of Review	Tribunal/ Other	Taxable Value
2024	22,900	0	22,900			6,597C
2023	12,900	0	12,900			6,283C
2022	11,900	0	11,900		11,900A	5,984C
2021	12,000	0	12,000		12,000A	5,793C

*** Information herein deemed reliable but not guaranteed***

Parcel Number: 2410-35-1104 Jurisdiction: GREENWOOD TWP County: WEXFORD Printed on 02/15/2024

Grantor	Grantee	Sale Price	Sale Date	Inst. Type	Terms of Sale	Liber & Page	Verified By	Prcnt. Trans.
GOSTLIN, TIMOTHY J.	DARNELL, DANIEL W.	37,800	09/14/1994	WD	03-ARM'S LENGTH	341:216	DEED	0.0
DRAFTZ, QUENTIN A.	GOSTLIN, TIMOTHY J.	29,900	02/15/1989	WD	03-ARM'S LENGTH	314:438	DEED	0.0

Property Address

6953 N 35 RD

Owner's Name/Address

DARNELL, DANIEL W
6953 N 35 RD
MANTON MI 49663

Tax Description

PAR COM 293.08 FT S OF NE COR: W 952.62 FT; S 460 FT; E 954.49 FT TO E SEC LINE; N 460 FT TO POB. AKA PARCEL "B" L66, PG 764 --10.07 A. GW. SEC. 35 T24N R10W -MANTON-

Comments/Influences

The Equalizer. Copyright (c) 1999 - 2009. Licensed To: Township of Greenwood, County of Wexford, Michigan

Class: RESIDENTIAL-IMPROV Zoning:

School: MANTON CONSOLIDATED SCHOOLS

P.R.E. 100% / /

:

2024 Est TCV 149,428 TCV/TFA: 121.29

Building Permit(s)	Date	Number	Status
RESIDENTIAL - REMODEL	05/01/1995	PB6512	

X	Improved		Vacant

	Public Improvements
	Dirt Road
X	Gravel Road
	Paved Road
	Storm Sewer
	Sidewalk
	Water
	Sewer
X	Electric
	Gas
	Curb
	Street Lights
	Standard Utilities
	Underground Utils.

	Topography of Site
	Level
X	Rolling
	Low
X	High
	Landscaped
	Swamp
	Wooded
	Pond
	Waterfront
	Ravine
	Wetland
	Flood Plain
X	OPEN

Who	When	What
GLA	05/11/2020	INSPECTION
GLA	07/10/2019	INSPECTION
GLA	07/10/2019	INSPECTION

Land Value Estimates for Land Table 4010.LAND VALUES

Description	Frontage	Depth	* Factors * Front	Depth	Rate	%Adj.	Reason	Value
ACREAGE			9.722 Acres		4,667	100		45,371
ROW			0.348 Acres		0	100		0
			10.07 Total Acres		Total Est. Land Value =			45,371

Land Improvement Cost Estimates

Description	Rate	Size	% Good	Cash Value
D/W/P: 3.5 Concrete	5.82	144	43	360
Total Estimated Land Improvements True Cash Value =				360

Year	Land Value	Building Value	Assessed Value	Board of Review	Tribunal/ Other	Taxable Value
2024	22,700	52,000	74,700			35,299C
2023	12,900	42,100	55,000			33,619C
2022	11,900	35,000	46,900			32,019C
2021	12,000	35,200	47,200			30,997C

*** Information herein deemed reliable but not guaranteed***

Building Type

X	Single Family
	Mobile Home
	Town Home
	Duplex
	A-Frame
X	Wood Frame

Building Style: RANCH

Yr Built	Remodeled
0	0

Condition: Fair

Room List

	Basement
	1st Floor
	2nd Floor
	Bedrooms

(1) Exterior

	Wood/Shingle
X	Aluminum/Vinyl
	Brick
X	Insulation

(2) Windows

	Many		Large
X	Avg.	X	Avg.
	Few		Small

	Wood Sash
	Metal Sash
X	Vinyl Sash
	Double Hung
	Horiz. Slide
	Casement
	Double Glass
	Patio Doors
X	Storms & Screens

(3) Roof

X	Gable		Gambrel
	Hip		Mansard
	Flat		Shed

X	Asphalt Shingle

Chimney:

(3) Roof (cont.)

	Eavestrough
X	Insulation
0	Front Overhang
0	Other Overhang

(4) Interior

X	Drywall		Plaster
	Paneled		Wood T&G

Trim & Decoration

	Ex	X	Ord		Min

Size of Closets

	Lg	X	Ord		Small

Doors:		Solid	X	H.C.	

(5) Floors

Kitchen:
Other: Linoleum
Other: Carpeted

(6) Ceilings

X	Drywall		

(7) Excavation

Basement: 1232 S.F.
Crawl: 0 S.F.
Slab: 0 S.F.
Height to Joists: 0.0

(8) Basement

	Conc. Block
	Poured Conc.
	Stone
	Treated Wood
	Concrete Floor

(9) Basement Finish

	Recreation SF
	Living SF
	Walkout Doors (B)
	No Floor SF
	Walkout Doors (A)

(10) Floor Support

Joists:
Unsupported Len:
Cntr.Sup:

(11) Heating/Cooling

X	Gas		Oil		Elec.
	Wood		Coal		Steam

	Forced Air w/o Ducts
X	Forced Air w/ Ducts
	Forced Hot Water
	Electric Baseboard
	Elec. Ceil. Radiant
	Radiant (in-floor)
	Electric Wall Heat
	Space Heater
	Wall/Floor Furnace
	Forced Heat & Cool
	Heat Pump
	No Heating/Cooling

	Central Air
	Wood Furnace

(12) Electric

150	Amps Service

No./Qual. of Fixtures

	Ex.	X	Ord.		Min

No. of Elec. Outlets

	Many	X	Ave.		Few

(13) Plumbing

	Average Fixture(s)
1	3 Fixture Bath
	2 Fixture Bath
	Softener, Auto
	Softener, Manual
	Solar Water Heat
	No Plumbing
	Extra Toilet
	Extra Sink
	Separate Shower
	Ceramic Tile Floor
	Ceramic Tile Wains
	Ceramic Tub Alcove
	Vent Fan

(14) Water/Sewer

	Public Water
	Public Sewer
1	Water Well
1	1000 Gal Septic
	2000 Gal Septic

Lump Sum Items:

(15) Built-ins

	Appliance Allow.
	Cook Top
	Dishwasher
	Garbage Disposal
	Bath Heater
	Vent Fan
	Hot Tub
	Unvented Hood
	Vented Hood
	Intercom
	Jacuzzi Tub
	Jacuzzi repl.Tub
	Oven
	Microwave
	Standard Range
	Self Clean Range
	Sauna
	Trash Compactor
	Central Vacuum
	Security System

(15) Fireplaces

	Interior 1 Story
	Interior 2 Story
	2nd/Same Stack
	Two Sided
	Exterior 1 Story
	Exterior 2 Story
	Prefab 1 Story
	Prefab 2 Story
	Heat Circulator
	Raised Hearth
	Wood Stove
	Direct-Vented Gas

Class: D
Effec. Age: 59
Floor Area: 1,232
Total Base New : 170,122 E.C.F.
Total Depr Cost: 76,555 X 1.297
Estimated T.C.V: 99,292

(16) Porches/Decks

Area	Type
60	CPP

(17) Garage

Year Built:
Car Capacity:
Class: D
Exterior: Pole
Brick Ven.: 0
Stone Ven.: 0
Common Wall: Detache
Foundation: 18 Inch
Finished ?:
Auto. Doors: 0
Mech. Doors: 0
Area: 576
% Good: 0
Storage Area: 0
No Conc. Floor: 0

Bsmnt Garage:

Carport Area:
Roof:

Cost Est. for Res. Bldg: 1 Single Family RANCH Cls D Blt 0
(11) Heating System: Forced Air w/ Ducts
Ground Area = 1232 SF Floor Area = 1232 SF.
Phy/Ab.Phy/Func/Econ/Comb. % Good=45/100/100/100/45
Building Areas

Stories	Exterior	Foundation	Size	Cost New	Depr. Cost
1 Story	Siding	Basement	1,232		
			Total:	146,194	65,787
Other Additions/Adjustments					
Water/Sewer					
1000 Gal Septic			1	4,293	1,932
Water Well, 100 Feet			1	5,545	2,495
Porches					
CPP			60	1,199	540
Garages					
Class: D Exterior: Pole (Unfinished)					
Base Cost			576	12,891	5,801
			Totals:	170,122	76,555

Notes:
ECF (RESIDENTIAL) 1.297 => TCV: 99,292

*** Information herein deemed reliable but not guaranteed***

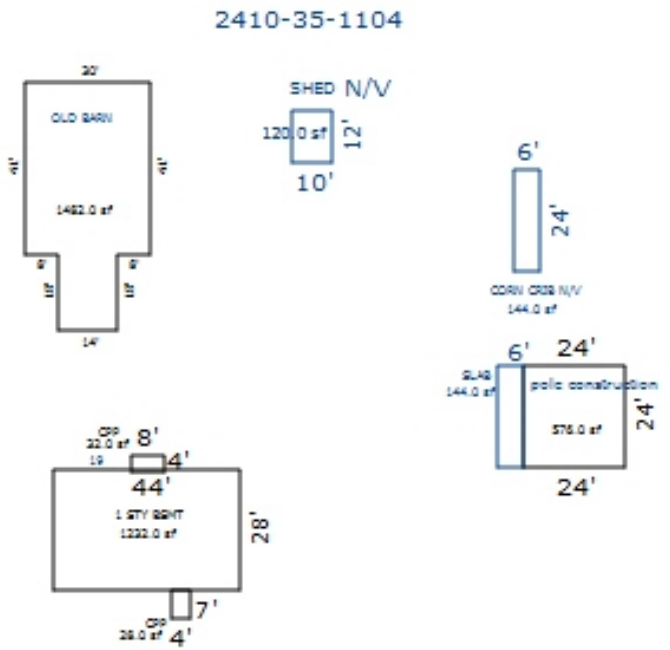

Sketch by Apex Sketch

*** Information herein deemed reliable but not guaranteed***

Building Type	Arenas				
Year Built					
Class/Construction	D,Pole				
Quality/Exterior	Cheap				
# of Walls, Perimeter	4 Wall, 148				
Height	24				
Heating System	No Heating/Cooling				
Length/Width/Area	50 x 30 = 1500				
Cost New	$ 23,280				
Phy./Func./Econ. %Good	20/100/100 20.0				
Depreciated Cost	$ 4,656				
+ Unit-In-Place Items	$ 0				
Description, Size X Rate X %Good = Cost Itemized ->\ Unit-In-Place ->\ Items ->\					
E.C.F.	X 0.946				
% Good	20				
Est. True Cash Value	$ 4,405				
Comments:					
Total Estimated True Cash Value of Agricultural Improvements / This Card: 4405 / All Cards: 4405					

*** Information herein deemed reliable but not guaranteed***

Parcel Number: 2410-35-1105 Jurisdiction: GREENWOOD TWP County: WEXFORD Printed on 02/15/2024

Grantor	Grantee	Sale Price	Sale Date	Inst. Type	Terms of Sale	Liber & Page	Verified By	Prcnt. Trans.
STRONG, DENISE A.	DARNELL, DANIEL W.	9,000	07/26/1996	LC	03-ARM'S LENGTH	351:918	DEED	0.0

Property Address

Owner's Name/Address

DARNELL, DANIEL W
6953 N 35 RD
MANTON MI 49663

Tax Description

THAT PART OF NE 1/4 OF NE 1/4 LYING S OF A LINE COM 753.08 FT S OF NE COR OF SEC & EXTENDING W TO A PT 331 FT E OF 1/8-LINE & ENDING EXC S 10 RDS OF E 16 RDS THEREOF AKA PAR "C" L66, PG 764 --11.64 A. GW. SEC. 35 T24N R10W -MANTON-

Comments/Influences

The Equalizer. Copyright (c) 1999 - 2009. Licensed To: Township of Greenwood, County of Wexford, Michigan

Class: RESIDENTIAL-VACANT Zoning:

School: MANTON CONSOLIDATED SCHOOLS

P.R.E. 100% / /

:

2024 Est TCV 46,808

Building Permit(s)	Date	Number	Status

	Improved	X	Vacant

	Public Improvements
X	Dirt Road
X	Gravel Road
	Paved Road
	Storm Sewer
	Sidewalk
	Water
	Sewer
X	Electric
	Gas
	Curb
	Street Lights
	Standard Utilities
	Underground Utils.

	Topography of Site
	Level
X	Rolling
	Low
	High
	Landscaped
X	Swamp
	Wooded
	Pond
	Waterfront
	Ravine
	Wetland
	Flood Plain
X	OPEN

Who	When	What
GLA	05/11/2020	INSPECTION
GLA	07/10/2019	INSPECTION
GLA	07/10/2019	INSPECTION

Land Value Estimates for Land Table 4010.LAND VALUES

Description	Frontage	Depth	* Factors * Front	Depth	Rate	%Adj.	Reason	Value
ACREAGE			11.389 Acres		4,110	100		46,808
ROW			0.251 Acres		0	100		0
			11.64 Total Acres		Total Est. Land Value =			46,808

Year	Land Value	Building Value	Assessed Value	Board of Review	Tribunal/ Other	Taxable Value
2024	23,400	0	23,400			8,468C
2023	14,800	0	14,800			8,065C
2022	13,500	0	13,500			7,681C
2021	13,700	0	13,700			7,436C

*** Information herein deemed reliable but not guaranteed***

Parcel Number: 2410-35-1201 Jurisdiction: GREENWOOD TWP County: WEXFORD Printed on 02/15/2024

Grantor	Grantee	Sale Price	Sale Date	Inst. Type	Terms of Sale	Liber & Page	Verified By	Prcnt. Trans.

Property Address	Class: RESIDENTIAL-IMPROV	Zoning:	Building Permit(s)	Date	Number	Status
4644 E 12 RD	School: MANTON CONSOLIDATED SCHOOLS					
	P.R.E. 100% / /					
Owner's Name/Address	:					
LEHMAN, MICHAEL C. & CAROL L. 4644 E 12 RD MANTON MI 49663	2024 Est TCV 271,559 TCV/TFA: 136.46					

X Improved | Vacant

Tax Description

E 1/2 OF NW 1/4 OF NE 1/4 19.61 A M/L GW. SEC. 35 T24N R10W -MANTON-

Comments/Influences

	Public Improvements
	Dirt Road
X	Gravel Road
	Paved Road
	Storm Sewer
	Sidewalk
	Water
	Sewer
X	Electric
	Gas
	Curb
	Street Lights
	Standard Utilities
	Underground Utils.

	Topography of Site
	Level
X	Rolling
X	Low
	High
	Landscaped
	Swamp
X	Wooded
	Pond
	Waterfront
	Ravine
	Wetland
	Flood Plain
X	OPEN/PINES

Who	When	What
GLA	05/11/2020	INSPECTION
GLA	07/10/2019	INSPECTION
GLA	07/10/2019	INSPECTION

The Equalizer. Copyright (c) 1999 - 2009.
Licensed To: Township of Greenwood, County of Wexford, Michigan

Land Value Estimates for Land Table 4010.LAND VALUES

Description	Frontage	Depth	* Factors * Front	Depth	Rate	%Adj.	Reason	Value
ACREAGE			19.610 Acres		3,200	100		62,752
ROW			0.500 Acres		0	100		0
			20.11 Total Acres		Total Est. Land Value =			62,752

Land Improvement Cost Estimates

Description	Rate	Size	% Good	Cash Value
D/W/P: 3.5 Concrete	6.63	336	45	1,003
Total Estimated Land Improvements True Cash Value =				1,003

Year	Land Value	Building Value	Assessed Value	Board of Review	Tribunal/ Other	Taxable Value
2024	31,400	104,400	135,800			69,129C
2023	25,500	85,700	111,200			65,838C
2022	21,600	72,800	94,400			62,703C
2021	19,800	74,000	93,800			60,700C

*** Information herein deemed reliable but not guaranteed***

Building Type

X	Single Family
	Mobile Home
	Town Home
	Duplex
	A-Frame
X	Wood Frame

Building Style: PLAIN

Yr Built	Remodeled
0	0

Condition: Good

Room List

	Basement
	1st Floor
	2nd Floor
	Bedrooms

(1) Exterior

X	Wood/Shingle
	Aluminum/Vinyl
	Brick
X	Insulation

(2) Windows

X	Many Avg. Few	X	Large Avg. Small

X	Wood Sash
	Metal Sash
	Vinyl Sash
	Double Hung
	Horiz. Slide
	Casement
	Double Glass
	Patio Doors
X	Storms & Screens

(3) Roof

X	Gable		Gambrel
	Hip		Mansard
	Flat		Shed

X	Asphalt Shingle

Chimney:

(3) Roof (cont.)

	Eavestrough
X	Insulation
0	Front Overhang
0	Other Overhang

(4) Interior

X	Drywall Paneled		Plaster Wood T&G

Trim & Decoration

	Ex	X	Ord		Min

Size of Closets

	Lg	X	Ord		Small

Doors:		Solid	X	H.C.	

(5) Floors

Kitchen:
Other: Linoleum
Other: Carpeted

(6) Ceilings

X	Drywall

(7) Excavation

Basement: 988 S.F.
Crawl: 0 S.F.
Slab: 0 S.F.
Height to Joists: 0.0

(8) Basement

	Conc. Block
	Poured Conc.
	Stone
	Treated Wood
	Concrete Floor

(9) Basement Finish

	Recreation	SF
844	Living	SF
	Walkout Doors	(B)
	No Floor	SF
	Walkout Doors	(A)

(10) Floor Support

Joists:
Unsupported Len:
Cntr.Sup:

(11) Heating/Cooling

X	Gas		Oil		Elec.
	Wood		Coal		Steam

	Forced Air w/o Ducts
X	Forced Air w/ Ducts
	Forced Hot Water
	Electric Baseboard
	Elec. Ceil. Radiant
	Radiant (in-floor)
	Electric Wall Heat
	Space Heater
	Wall/Floor Furnace
	Forced Heat & Cool
	Heat Pump
	No Heating/Cooling

	Central Air
	Wood Furnace

(12) Electric

150	Amps Service

No./Qual. of Fixtures

	Ex.	X	Ord.		Min

No. of Elec. Outlets

	Many	X	Ave.		Few

(13) Plumbing

	Average Fixture(s)
2	3 Fixture Bath
	2 Fixture Bath
	Softener, Auto
	Softener, Manual
	Solar Water Heat
	No Plumbing
	Extra Toilet
	Extra Sink
	Separate Shower
	Ceramic Tile Floor
	Ceramic Tile Wains
	Ceramic Tub Alcove
	Vent Fan

(14) Water/Sewer

	Public Water
	Public Sewer
1	Water Well
1	1000 Gal Septic
	2000 Gal Septic

Lump Sum Items:

(15) Built-ins

	Appliance Allow.
	Cook Top
	Dishwasher
	Garbage Disposal
	Bath Heater
	Vent Fan
	Hot Tub
	Unvented Hood
	Vented Hood
	Intercom
	Jacuzzi Tub
	Jacuzzi repl.Tub
	Oven
	Microwave
	Standard Range
	Self Clean Range
	Sauna
	Trash Compactor
	Central Vacuum
	Security System

(15) Fireplaces

	Interior 1 Story
	Interior 2 Story
	2nd/Same Stack
	Two Sided
	Exterior 1 Story
1	Exterior 2 Story
	Prefab 1 Story
	Prefab 2 Story
	Heat Circulator
	Raised Hearth
	Wood Stove
	Direct-Vented Gas

Class: CD
Effec. Age: 49
Floor Area: 1,990
Total Base New : 314,151 E.C.F.
Total Depr Cost: 160,219 X 1.297
Estimated T.C.V: 207,804

(16) Porches/Decks

Area	Type
522	WPP
190	WGEP (1 Story)
874	Treated Wood

(17) Garage

Year Built:
Car Capacity:
Class: CD
Exterior: Pole
Brick Ven.: 0
Stone Ven.: 0
Common Wall: Detache
Foundation: 18 Inch
Finished ?:
Auto. Doors: 0
Mech. Doors: 0
Area: 672
% Good: 0
Storage Area: 0
No Conc. Floor: 0

Bsmnt Garage:

Carport Area:
Roof:

Cost Est. for Res. Bldg: 1 Single Family PLAIN Cls CD Blt 0
(11) Heating System: Forced Air w/ Ducts
Ground Area = 988 SF Floor Area = 1990 SF.
Phy/Ab.Phy/Func/Econ/Comb. % Good=51/100/100/100/51

Building Areas

Stories	Exterior	Foundation	Size	Cost New	Depr. Cost
2 Story	Siding	Basement	988		
1 Story	Siding	Overhang	14		
			Total:	215,409	109,860
Other Additions/Adjustments					
Basement Living Area			844	28,417	14,493
Plumbing					
3 Fixture Bath			1	3,887	1,982
Water/Sewer					
1000 Gal Septic			1	4,582	2,337
Water Well, 100 Feet			1	5,680	2,897
Porches					
WPP			522	7,767	3,961
WGEP (1 Story)			190	13,435	6,852
Garages					
Class: CD Exterior: Pole (Unfinished)					
Base Cost			672	16,713	8,524
Fireplaces					
Exterior 2 Story			1	7,100	3,621
Deck					
Treated Wood			874	11,161	5,692
			Totals:	314,151	160,219

Notes:

ECF (RESIDENTIAL) 1.297 => TCV: 207,804

*** Information herein deemed reliable but not guaranteed***

2410-35-1201

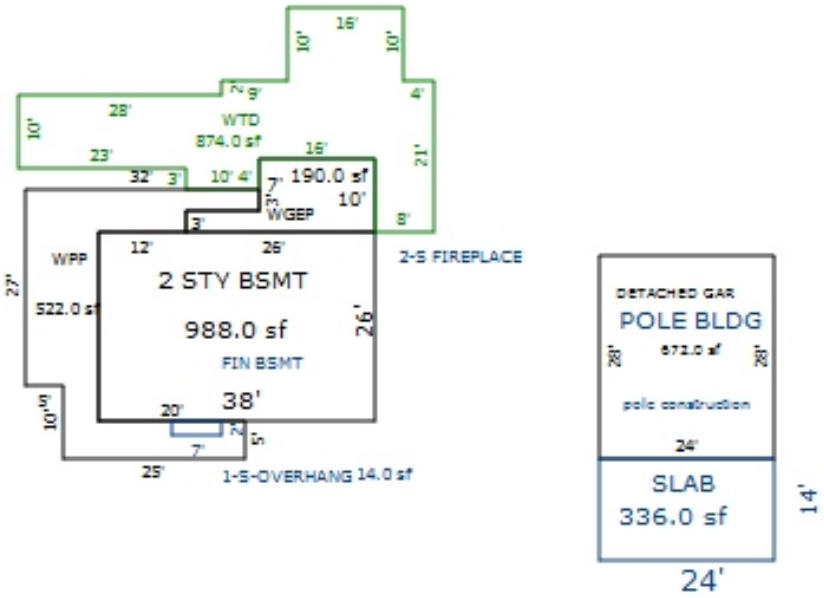

Sketch by Apex Sketch

*** Information herein deemed reliable but not guaranteed***

Parcel Number: 2410-35-1202 Jurisdiction: GREENWOOD TWP County: WEXFORD Printed on 02/15/2024

Grantor	Grantee	Sale Price	Sale Date	Inst. Type	Terms of Sale	Liber & Page	Verified By	Prcnt. Trans.
COLTON, CHAD R	COLTON, CHAD R & KARENA A	1	11/15/2017	QC	21-NOT USED/OTHER	681 /1361	DEED	0.0
COLTON, RUSSELL H & JUDY D	COLTON, CHAD R	1	11/07/2017	QC	09-FAMILY	681 /1233	DEED	0.0
COLTON, RUSSELL H.	COLTON, RUSSELL H & JUDY I	0	09/17/2015	QC	14-INTO/OUT OF TRUST	676/208	DEED	0.0

Property Address

4560 E 12 RD

Owner's Name/Address

COLTON, CHAD R & KARENA A
4560 E 12 RD
MANTON MI 49663

Tax Description

W 1/2 OF NW 1/4 OF NE 1/4 19.62 A M/L GW. SEC. 35 T24N R10W -MANTON-

Comments/Influences

Class: RESIDENTIAL-IMPROV Zoning:

School: MANTON CONSOLIDATED SCHOOLS

P.R.E. 100% 11/28/2017

:

2024 Est TCV 230,646 TCV/TFA: 152.54

Building Permit(s)	Date	Number	Status

X	Improved		Vacant

	Public Improvements
	Dirt Road
X	Gravel Road
	Paved Road
	Storm Sewer
	Sidewalk
	Water
	Sewer
X	Electric
	Gas
	Curb
	Street Lights
	Standard Utilities
	Underground Utils.

	Topography of Site
X	Level
	Rolling
	Low
	High
	Landscaped
	Swamp
X	Wooded
	Pond
	Waterfront
	Ravine
	Wetland
	Flood Plain
X	PINES

Who	When	What
GLA	05/11/2020	INSPECTION
GLA	07/10/2019	INSPECTION
GLA	07/10/2019	INSPECTION

Land Value Estimates for Land Table 4010.LAND VALUES

Description	Frontage	Depth	* Factors * Front	Depth	Rate	%Adj.	Reason	Value
ACREAGE			19.120 Acres		3,200	100		61,184
ROW			0.500 Acres		0	100		0
			19.62 Total Acres		Total Est. Land Value =			61,184

Land Improvement Cost Estimates

Description	Rate	Size	% Good	Cash Value
D/W/P: 3.5 Concrete	5.82	288	45	754
D/W/P: 4in Concrete	6.11	72	46	202
Wood Frame	20.48	176	42	1,514
Wood Frame	21.02	160	56	1,883
Total Estimated Land Improvements True Cash Value =				4,353

Year	Land Value	Building Value	Assessed Value	Board of Review	Tribunal/ Other	Taxable Value
2024	30,600	84,700	115,300			55,756C
2023	24,900	69,800	94,700			53,101C
2022	21,200	59,300	80,500			50,573C
2021	19,600	60,300	79,900			48,958C

The Equalizer. Copyright (c) 1999 - 2009.
Licensed To: Township of Greenwood, County of Wexford, Michigan

*** Information herein deemed reliable but not guaranteed***

Building Type

X	Single Family
	Mobile Home
	Town Home
	Duplex
	A-Frame
X	Wood Frame

Building Style: PLAIN

Yr Built	Remodeled
0	0

Condition: Good

Room List

	Basement
	1st Floor
	2nd Floor
	Bedrooms

(1) Exterior

	Wood/Shingle
X	Aluminum/Vinyl
	Brick
X	Insulation

(2) Windows

	Many		Large
X	Avg.	X	Avg.
	Few		Small

X	Wood Sash
	Metal Sash
	Vinyl Sash
	Double Hung
	Horiz. Slide
	Casement
	Double Glass
	Patio Doors
X	Storms & Screens

(3) Roof

X	Gable		Gambrel
	Hip		Mansard
	Flat		Shed

X	Asphalt Shingle

Chimney:

(3) Roof (cont.)

	Eavestrough
X	Insulation
0	Front Overhang
0	Other Overhang

(4) Interior

X	Drywall		Plaster
	Paneled		Wood T&G

Trim & Decoration

	Ex	X	Ord		Min

Size of Closets

	Lg	X	Ord		Small

Doors:		Solid	X	H.C.	

(5) Floors

Kitchen:
Other: Linoleum
Other: Carpeted

(6) Ceilings

X	Drywall		

(7) Excavation

Basement: 1008 S.F.
Crawl: 0 S.F.
Slab: 0 S.F.
Height to Joists: 0.0

(8) Basement

	Conc. Block
	Poured Conc.
	Stone
	Treated Wood
	Concrete Floor

(9) Basement Finish

864	Recreation	SF
	Living	SF
	Walkout Doors	(B)
	No Floor	SF
	Walkout Doors	(A)

(10) Floor Support

Joists:
Unsupported Len:
Cntr.Sup:

(11) Heating/Cooling

X	Gas		Oil		Elec.
	Wood		Coal		Steam

	Forced Air w/o Ducts
X	Forced Air w/ Ducts
	Forced Hot Water
	Electric Baseboard
	Elec. Ceil. Radiant
	Radiant (in-floor)
	Electric Wall Heat
	Space Heater
	Wall/Floor Furnace
	Forced Heat & Cool
	Heat Pump
	No Heating/Cooling
	Central Air
	Wood Furnace

(12) Electric

150	Amps Service

No./Qual. of Fixtures

	Ex.	X	Ord.		Min

No. of Elec. Outlets

	Many	X	Ave.		Few

(13) Plumbing

	Average Fixture(s)
2	3 Fixture Bath
	2 Fixture Bath
	Softener, Auto
	Softener, Manual
	Solar Water Heat
	No Plumbing
	Extra Toilet
	Extra Sink
	Separate Shower
	Ceramic Tile Floor
	Ceramic Tile Wains
	Ceramic Tub Alcove
	Vent Fan

(14) Water/Sewer

	Public Water
	Public Sewer
1	Water Well
1	1000 Gal Septic
	2000 Gal Septic

Lump Sum Items:

(15) Built-ins

	Appliance Allow.
	Cook Top
	Dishwasher
	Garbage Disposal
	Bath Heater
	Vent Fan
	Hot Tub
	Unvented Hood
	Vented Hood
	Intercom
	Jacuzzi Tub
	Jacuzzi repl.Tub
	Oven
	Microwave
	Standard Range
	Self Clean Range
	Sauna
	Trash Compactor
	Central Vacuum
	Security System

(15) Fireplaces

	Interior 1 Story
	Interior 2 Story
	2nd/Same Stack
	Two Sided
	Exterior 1 Story
1	Exterior 2 Story
	Prefab 1 Story
	Prefab 2 Story
	Heat Circulator
	Raised Hearth
	Wood Stove
	Direct-Vented Gas

Class: CD
Effec. Age: 49
Floor Area: 1,512
Total Base New : 249,612 E.C.F.
Total Depr Cost: 127,301 X 1.297
Estimated T.C.V: 165,109

(16) Porches/Decks

Area	Type
375	WPP
64	WPP
188	Treated Wood

(17) Garage

Year Built:
Car Capacity:
Class: CD
Exterior: Siding
Brick Ven.: 0
Stone Ven.: 0
Common Wall: Detache
Foundation: 42 Inch
Finished ?:
Auto. Doors: 0
Mech. Doors: 0
Area: 864
% Good: 0
Storage Area: 0
No Conc. Floor: 0

Bsmnt Garage:

Carport Area:
Roof:

Cost Est. for Res. Bldg: 1 Single Family PLAIN Cls CD Blt 0
(11) Heating System: Forced Air w/ Ducts
Ground Area = 1008 SF Floor Area = 1512 SF.
Phy/Ab.Phy/Func/Econ/Comb. % Good=51/100/100/100/51
Building Areas

Stories	Exterior	Foundation	Size	Cost New	Depr. Cost
1.5 Story	Siding	Basement	1,008		
			Total:	170,649	87,030
Other Additions/Adjustments					
Recreation Room			864	16,122	8,222
Plumbing					
3 Fixture Bath			1	3,887	1,982
Water/Sewer					
1000 Gal Septic			1	4,582	2,337
Water Well, 100 Feet			1	5,680	2,897
Porches					
WPP			375	5,606	2,859
WPP			64	2,173	1,108
Deck					
Treated Wood			188	3,910	1,994
Garages					
Class: CD Exterior: Siding Foundation: 42 Inch (Unfinished)					
Base Cost			864	29,903	15,251
Fireplaces					
Exterior 2 Story			1	7,100	3,621
			Totals:	249,612	127,301

Notes:
ECF (RESIDENTIAL) 1.297 => TCV: 165,109

*** Information herein deemed reliable but not guaranteed***

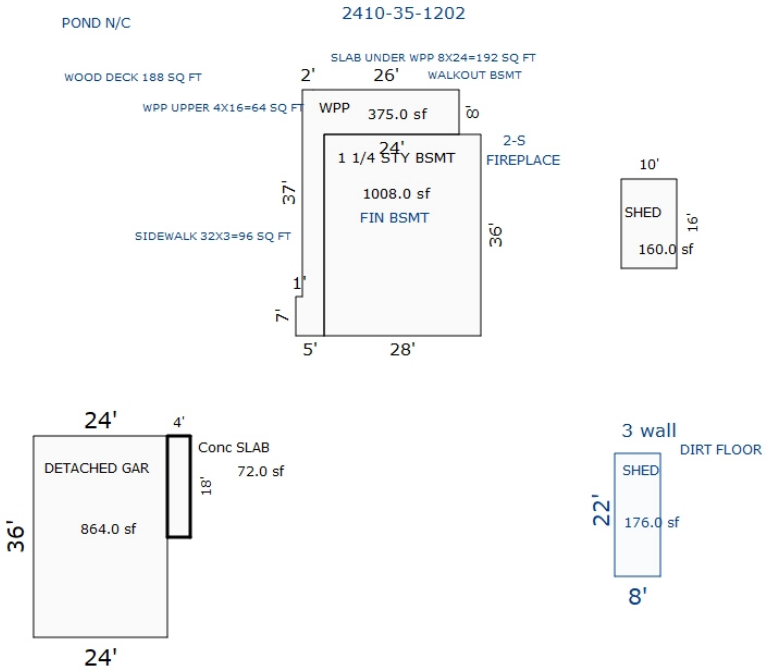

Sketch by Apex Sketch

*** Information herein deemed reliable but not guaranteed***

Parcel Number: 2410-35-1301 Jurisdiction: GREENWOOD TWP County: WEXFORD Printed on 02/15/2024

Grantor	Grantee	Sale Price	Sale Date	Inst. Type	Terms of Sale	Liber & Page	Verified By	Prcnt. Trans.
POCOCK, STEVEN & CONSTANCE	POCOCK, STEVEN W & CONSTAN	0	05/14/2019	QC	14-INTO/OUT OF TRUST	685 / 250	DEED	0.0
FEDERAL NATIONAL MORTGAGE	POCOCK, STEVEN & CONSTANCE	30,500	08/18/2010	WD	11-FROM LENDING INSTITUTI	634/1956	DEED	100.0
NORTHWESTERN MORTGAGE CO	FEDERAL NATIONAL MORTGAGE	0	03/30/2010	QC	17-LENDING TO LENDING	628/2162	DEED	0.0
KIMBEL, TAMARA K	NORTHWESTERN MORTGAGE CO	76,036	02/06/2009	SD	10-FORECLOSURE	617/2271	DEED	0.0

Property Address

4703 E 12 1/2 RD

Owner's Name/Address

POCOCK, STEVEN W & CONSTANCE L
4703 E 12 1/2 RD
MANTON MI 49663

Tax Description

THAT PART OF SW 1/4 OF NE 1/4 LYING E OF A LINE COM 1701.76 FT W OF E 1/4 COR OF SEC, TH N 1329.53 FT TO N 1/8 LINE & ENDING --13.14 A. M/L-- GW. SEC. 35 T24N R10W -MANTON-

Comments/Influences

The Equalizer. Copyright (c) 1999 - 2009. Licensed To: Township of Greenwood, County of Wexford, Michigan

Class: RESIDENTIAL-IMPROV Zoning:

School: MANTON CONSOLIDATED SCHOOLS

P.R.E. 100% 09/12/2015

:

2024 Est TCV 199,128 TCV/TFA: 106.37

Building Permit(s)	Date	Number	Status

X	Improved		Vacant

	Public Improvements
	Dirt Road
X	Gravel Road
	Paved Road
	Storm Sewer
	Sidewalk
	Water
	Sewer
X	Electric
	Gas
	Curb
	Street Lights
	Standard Utilities
	Underground Utils.

	Topography of Site
	Level
X	Rolling
	Low
	High
	Landscaped
X	Swamp
	Wooded
	Pond
	Waterfront
	Ravine
	Wetland
	Flood Plain

Who	When	What
GLA	05/11/2020	INSPECTION
GLA	07/10/2019	INSPECTION
GLA	07/10/2019	INSPECTION

Land Value Estimates for Land Table 4010.LAND VALUES

Description	Frontage	Depth	* Factors * Front	Depth	Rate	%Adj.	Reason	Value
	1320.00	0.00	1.0000	1.0000	0	100		0
ACREAGE			12.851 Acres		3,680	100		47,291
ROW			0.289 Acres		0	100		0

1320 Actual Front Feet, 13.14 Total Acres Total Est. Land Value = 47,291

Land Improvement Cost Estimates

Description	Rate	Size	% Good	Cash Value
D/W/P: 3.5 Concrete	5.82	487	45	1,275
D/W/P: 3.5 Concrete	5.82	98	46	262

Total Estimated Land Improvements True Cash Value = 1,537

Year	Land Value	Building Value	Assessed Value	Board of Review	Tribunal/ Other	Taxable Value
2024	23,600	76,000	99,600			63,779C
2023	16,700	62,400	79,100			60,742C
2022	20,300	53,000	73,300			57,850C
2021	20,700	53,900	74,600			56,002C

*** Information herein deemed reliable but not guaranteed***

Building Type

X	Single Family
	Mobile Home
	Town Home
	Duplex
	A-Frame
X	Wood Frame

Building Style: PLAIN

Yr Built	Remodeled
0	0

Condition: Good

Room List

	Basement
	1st Floor
	2nd Floor
	Bedrooms

(1) Exterior

X	Wood/Shingle
	Aluminum/Vinyl
	Brick
X	Insulation

(2) Windows

	Many		Large
X	Avg.	X	Avg.
	Few		Small

X	Wood Sash
	Metal Sash
	Vinyl Sash
	Double Hung
	Horiz. Slide
	Casement
	Double Glass
	Patio Doors
X	Storms & Screens

(3) Roof

X	Gable		Gambrel
	Hip		Mansard
	Flat		Shed

X	Asphalt Shingle

Chimney:

(3) Roof (cont.)

	Eavestrough
X	Insulation
0	Front Overhang
0	Other Overhang

(4) Interior

X	Drywall		Plaster
	Paneled		Wood T&G

Trim & Decoration

	Ex	X	Ord		Min

Size of Closets

	Lg	X	Ord		Small

Doors:		Solid	X	H.C.	

(5) Floors

Kitchen:
Other: Linoleum
Other: Carpeted

(6) Ceilings

X	Drywall

(7) Excavation

Basement: 1040 S.F.
Crawl: 0 S.F.
Slab: 832 S.F.
Height to Joists: 0.0

(8) Basement

	Conc. Block
	Poured Conc.
	Stone
	Treated Wood
	Concrete Floor

(9) Basement Finish

	Recreation SF
	Living SF
	Walkout Doors (B)
	No Floor SF
	Walkout Doors (A)

(10) Floor Support

Joists:
Unsupported Len:
Cntr.Sup:

(11) Heating/Cooling

X	Gas		Oil		Elec.
	Wood		Coal		Steam

	Forced Air w/o Ducts
X	Forced Air w/ Ducts
	Forced Hot Water
	Electric Baseboard
	Elec. Ceil. Radiant
	Radiant (in-floor)
	Electric Wall Heat
	Space Heater
	Wall/Floor Furnace
	Forced Heat & Cool
	Heat Pump
	No Heating/Cooling
	Central Air
	Wood Furnace

(12) Electric

150	Amps Service

No./Qual. of Fixtures

	Ex.	X	Ord.		Min

No. of Elec. Outlets

	Many	X	Ave.		Few

(13) Plumbing

1	Average Fixture(s)
	3 Fixture Bath
	2 Fixture Bath
	Softener, Auto
	Softener, Manual
	Solar Water Heat
	No Plumbing
	Extra Toilet
	Extra Sink
	Separate Shower
	Ceramic Tile Floor
	Ceramic Tile Wains
	Ceramic Tub Alcove
	Vent Fan

(14) Water/Sewer

	Public Water
	Public Sewer
1	Water Well
1	1000 Gal Septic
	2000 Gal Septic

Lump Sum Items:

(15) Built-ins

	Appliance Allow.
	Cook Top
	Dishwasher
	Garbage Disposal
	Bath Heater
	Vent Fan
	Hot Tub
	Unvented Hood
	Vented Hood
	Intercom
	Jacuzzi Tub
	Jacuzzi repl.Tub
	Oven
	Microwave
	Standard Range
	Self Clean Range
	Sauna
	Trash Compactor
	Central Vacuum
	Security System

(15) Fireplaces

	Interior 1 Story
	Interior 2 Story
	2nd/Same Stack
	Two Sided
	Exterior 1 Story
	Exterior 2 Story
	Prefab 1 Story
	Prefab 2 Story
	Heat Circulator
	Raised Hearth
	Wood Stove
	Direct-Vented Gas

Class: D
Effec. Age: 49
Floor Area: 1,872
Total Base New : 227,222 E.C.F.
Total Depr Cost: 115,883 X 1.297
Estimated T.C.V: 150,300

(16) Porches/Decks

Area	Type
192	Treated Wood
40	Composite

(17) Garage

Year Built:
Car Capacity:
Class: D
Exterior: Siding
Brick Ven.: 0
Stone Ven.: 0
Common Wall: Detache
Foundation: 18 Inch
Finished ?:
Auto. Doors: 0
Mech. Doors: 0
Area: 576
% Good: 0
Storage Area: 0
No Conc. Floor: 0

Bsmnt Garage:

Carport Area:
Roof:

Cost Est. for Res. Bldg: 1 Single Family PLAIN Cls D Blt 0
(11) Heating System: Forced Air w/ Ducts
Ground Area = 1872 SF Floor Area = 1872 SF.
Phy/Ab.Phy/Func/Econ/Comb. % Good=51/100/100/100/51
Building Areas

Stories	Exterior	Foundation	Size	Cost New	Depr. Cost
1 Story	Siding	Basement	1,040		
1 Story	Siding	Slab	832		
			Total:	194,762	99,329

Other Additions/Adjustments

Water/Sewer			
1000 Gal Septic	1	4,293	2,189
Water Well, 100 Feet	1	5,545	2,828
Deck			
Treated Wood	192	3,880	1,979
Composite	40	1,548	789
Garages			
Class: D Exterior: Siding Foundation: 18 Inch (Unfinished)			
Base Cost	576	17,194	8,769
	Totals:	227,222	115,883

Notes:
ECF (RESIDENTIAL) 1.297 => TCV: 150,300

*** Information herein deemed reliable but not guaranteed***

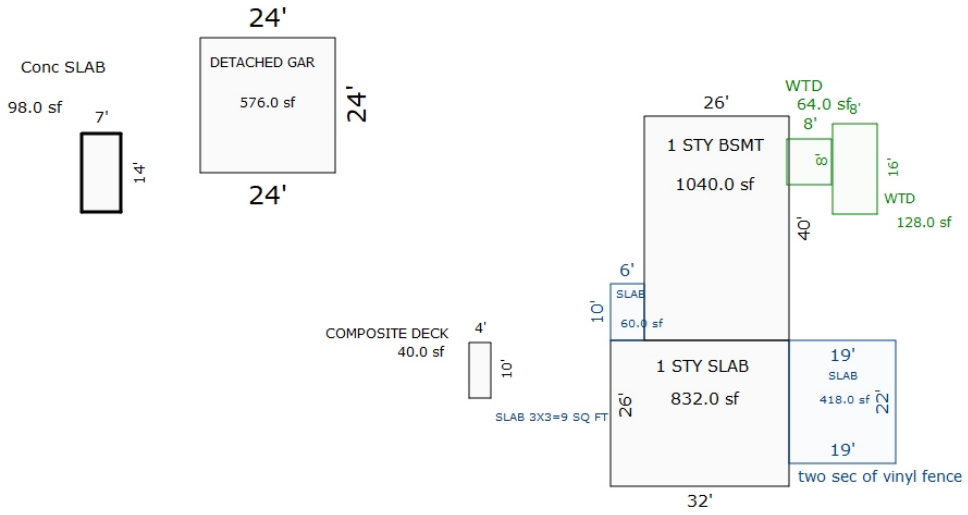

Sketch by Apex Sketch

*** Information herein deemed reliable but not guaranteed***

Parcel Number: 2410-35-1302 Jurisdiction: GREENWOOD TWP County: WEXFORD Printed on 02/15/2024

Grantor	Grantee	Sale Price	Sale Date	Inst. Type	Terms of Sale	Liber & Page	Verified By	Prcnt. Trans.
WETHERELL, DAVID	SCHMITT, DEBRA & MICHAEL	10,500	07/15/1993	WD	03-ARM'S LENGTH	335:67	DEED	0.0
KIMBEL, TAMARA K.	WETHERELL, DAVID	8,008	08/21/1992	WD	03-ARM'S LENGTH	330:833	DEED	0.0

Property Address

Owner's Name/Address

SCHMITT, DEBRA L.
& MICHAEL C. SCHMITT, JR
4704 E 12 1/2 RD
MANTON MI 49663

Tax Description

PARCEL "B" BEING A PART OF SW 1/4 OF NE 1/4 DESC AS: COM AT E 1/4 COR: TH W 1926.41 FT TO POB: W 330.02 FT; N 1330.01 FT TO N 1/8-LINE; E 325.77 FT; S 1329.71 FT TO POB. 10.01 A M/L GW. SEC. 35 T24N R10W -MANTON-

Comments/Influences

The Equalizer. Copyright (c) 1999 - 2009. Licensed To: Township of Greenwood, County of Wexford, Michigan

Class: RESIDENTIAL-VACANT Zoning:

School: MANTON CONSOLIDATED SCHOOLS

P.R.E. 100% / /

:

2024 Est TCV 45,505

	Improved	X	Vacant

	Public Improvements
X	Dirt Road
X	Gravel Road
	Paved Road
	Storm Sewer
	Sidewalk
	Water
	Sewer
X	Electric
	Gas
	Curb
	Street Lights
	Standard Utilities
	Underground Utils.

	Topography of Site
	Level
X	Rolling
X	Low
X	High
	Landscaped
X	Swamp
X	Wooded
	Pond
	Waterfront
	Ravine
	Wetland
	Flood Plain
X	OPEN/PINES

Who	When	What
GLA	05/11/2020	INSPECTION
GLA	07/10/2019	INSPECTION
GLA	07/10/2019	INSPECTION

Building Permit(s)	Date	Number	Status

Land Value Estimates for Land Table 4010.LAND VALUES

Description	Frontage	Depth	* Factors * Front	Depth	Rate	%Adj.	Reason	Value
ACREAGE			9.760 Acres		4,662	100		45,505
ROW			0.250 Acres		0	100		0
			10.01 Total Acres		Total Est. Land Value =			45,505

Year	Land Value	Building Value	Assessed Value	Board of Review	Tribunal/ Other	Taxable Value
2024	22,800	0	22,800			7,011C
2023	12,900	0	12,900			6,678C
2022	11,900	0	11,900			6,360C
2021	12,000	0	12,000			6,157C

*** Information herein deemed reliable but not guaranteed***

Parcel Number: 2410-35-1303 Jurisdiction: GREENWOOD TWP County: WEXFORD Printed on 02/15/2024

Grantor	Grantee	Sale Price	Sale Date	Inst. Type	Terms of Sale	Liber & Page	Verified By	Prcnt. Trans.
GREEN TREE SERVICING LLC	SCHMITT, MICHAEL C & DEBRA	52,000	08/01/2007	WD	21-NOT USED/OTHER	603/557	DEED	100.0
TIDEY, TIMOTHY T & LORI S	GREEN TREE SERVICING LLC	61,542	01/26/2007	SD	21-NOT USED/OTHER	597/618	DEED	0.0
SCHMITT, DEBRA & MIKE	TIDEY, TIM & LORI	5,250	04/28/2000	WD	03-ARM'S LENGTH	373:817	DEED	0.0

Property Address

4517 E 12 1/2 RD

Owner's Name/Address

SCHMITT, MICHAEL C & DEBRA L
3704 E 12 1/2 RD
MANTON MI 49663

Tax Description

PAR "A" PART OF SW 1/4 OF NE 1/4 DESC AS COM AT E 1/4 COR; W 2586.46 FT TO CENTER 1/4 & POB: N 1330.32 FT; E 325.63 FT; S 1330.01 FT; W 330.03 FT TO POB. --10.01 A M/L-- GW SEC 35 T24N R10W -MANTON- [[ASSESSED W/ 35-1302 '00

Comments/Influences

The Equalizer. Copyright (c) 1999 - 2009. Licensed To: Township of Greenwood, County of Wexford, Michigan

Class: RESIDENTIAL-IMPROV Zoning:

School: MANTON CONSOLIDATED SCHOOLS

P.R.E. 33% 03/23/2009

:

2024 Est TCV 125,066 TCV/TFA: 108.56

Building Permit(s)	Date	Number	Status
RESIDENTIAL - REMODEL	10/03/2000	PB9995	
RESIDENTIAL - NEW	10/02/2000	PE13298	
MOBILE HOME	08/14/2000	PM4333	
MOBILE HOME	07/17/2000	PE13065	

X	Improved		Vacant

	Public Improvements
	Dirt Road
X	Gravel Road
	Paved Road
	Storm Sewer
	Sidewalk
	Water
	Sewer
X	Electric
	Gas
	Curb
	Street Lights
	Standard Utilities
	Underground Utils.

	Topography of Site
	Level
X	Rolling
	Low
	High
	Landscaped
	Swamp
X	Wooded
	Pond
	Waterfront
	Ravine
	Wetland
	Flood Plain
X	OPEN/PINES

Who	When	What
GLA	05/11/2020	INSPECTION
GLA	07/10/2019	INSPECTION
GLA	07/10/2019	INSPECTION

Land Value Estimates for Land Table 4010.LAND VALUES

Description	Frontage	Depth	* Factors * Front	Depth	Rate	%Adj.	Reason	Value
ACREAGE			9.760 Acres		4,662	100		45,505
ROW			0.250 Acres		0	100		0
			10.01 Total Acres		Total Est. Land Value =			45,505

Land Improvement Cost Estimates

Description	Rate	Size	% Good	Cash Value
D/W/P: 3.5 Concrete	6.63	637	49	2,069
Total Estimated Land Improvements True Cash Value =				2,069

Year	Land Value	Building Value	Assessed Value	Board of Review	Tribunal/ Other	Taxable Value
2024	22,800	39,700	62,500			34,360C
2023	12,900	33,500	46,400			32,724C
2022	11,900	29,000	40,900			31,166C
2021	12,000	25,800	37,800			30,171C

*** Information herein deemed reliable but not guaranteed***

Building Type

	Single Family
X	Mobile Home
	Town Home
	Duplex
	A-Frame

X	Wood Frame

Building Style: SWT/DWT

Yr Built	Remodeled
2001	0

Condition: Average

Room List

	Basement
	1st Floor
	2nd Floor
	Bedrooms

(1) Exterior

	Wood/Shingle
X	Aluminum/Vinyl
	Brick
X	Insulation

(2) Windows

	Many		Large
X	Avg.	X	Avg.
	Few		Small

	Wood Sash
	Metal Sash
X	Vinyl Sash
	Double Hung
	Horiz. Slide
	Casement
	Double Glass
	Patio Doors
X	Storms & Screens

(3) Roof

X	Gable		Gambrel
	Hip		Mansard
	Flat		Shed

X	Asphalt Shingle

Chimney:

(3) Roof (cont.)

	Eavestrough
X	Insulation
0	Front Overhang
0	Other Overhang

(4) Interior

X	Drywall		Plaster
	Paneled		Wood T&G

Trim & Decoration

	Ex	X	Ord		Min

Size of Closets

	Lg	X	Ord		Small

Doors:		Solid	X	H.C.	

(5) Floors

Kitchen:
Other: Linoleum
Other: Carpeted

(6) Ceilings

X	Drywall		

(7) Excavation

Basement: 0 S.F.
Crawl: 0 S.F.
Slab: 0 S.F.
Height to Joists: 0.0

(8) Basement

	Conc. Block
	Poured Conc.
	Stone
	Treated Wood
	Concrete Floor

(9) Basement Finish

	Recreation	SF
	Living	SF
	Walkout Doors (B)	
	No Floor	SF
	Walkout Doors (A)	

(10) Floor Support

Joists:
Unsupported Len:
Cntr.Sup:

(11) Heating/Cooling

X	Gas		Oil		Elec.
	Wood		Coal		Steam

X	Forced Warm Air
	Wall Furnace
	Warm & Cool Air
	Heat Pump
	Central Air
	Wood Furnace

(12) Electric

150	Amps Service

No./Qual. of Fixtures

	Ex.	X	Ord.		Min

No. of Elec. Outlets

	Many	X	Ave.		Few

(13) Plumbing

2	Average Fixture(s)
	3 Fixture Bath
	2 Fixture Bath
	Softener, Auto
	Softener, Manual
	Solar Water Heat
	No Plumbing
	Extra Toilet
	Extra Sink
	Separate Shower
	Ceramic Tile Floor
	Ceramic Tile Wains
	Ceramic Tub Alcove
	Vent Fan

(14) Water/Sewer

	Public Water
	Public Sewer
1	Water Well
1	1000 Gal Septic
	2000 Gal Septic

Lump Sum Items:

(15) Built-ins

	Appliance Allow.
	Cook Top
	Dishwasher
	Garbage Disposal
	Bath Heater
	Vent Fan
	Hot Tub
	Unvented Hood
	Vented Hood
	Intercom
	Jacuzzi Tub
	Jacuzzi repl.Tub
	Oven
	Microwave
	Standard Range
	Self Clean Range
	Sauna
	Trash Compactor
	Central Vacuum
	Security System

(15) Fireplaces

	Interior 1 Story
	Interior 2 Story
	2nd/Same Stack
	Two Sided
	Exterior 1 Story
	Exterior 2 Story
	Prefab 1 Story
	Prefab 2 Story
	Heat Circulator
	Raised Hearth
	Wood Stove
	Direct-Vented Gas

Class: Average
Effec. Age: 23
Floor Area:
Total Base New : 121,930 E.C.F.
Total Depr Cost: 59,747 X 1.297
Estimated T.C.V: 77,492

(16) Porches/Decks

Area	Type
53	Treated Wood
12	Treated Wood

(17) Garage

Year Built:
Car Capacity:
Class: C
Exterior: Pole
Brick Ven.: 0
Stone Ven.: 0
Common Wall: Detache
Foundation: 18 Inch
Finished ?:
Auto. Doors: 0
Mech. Doors: 0
Area: 720
% Good: 0
Storage Area: 0
No Conc. Floor: 0

Bsmnt Garage:

Carport Area:
Roof:

Cost Est. for Res. Bldg: 1 Mobile Home SWT/DWT Cls Average Blt 2001
(11) Heating System: Forced Warm Air
Ground Area = 1152 SF Floor Area = 1152 SF.
Phy/Ab.Phy/Func/Econ/Comb. % Good=49/100/100/100/49
Building Areas

Type	Ext. Walls	Roof/Fnd.	Size	Cost New	Depr. Cost
Main Home	Siding	Comp.Shingle	1152		
			Total:	84,312	41,314
Other Additions/Adjustments					
Skirting, Metal or Vinyl, Vertical			144	1,647	807
Plumbing					
3 Fixture Bath			1	3,075	1,507
Water/Sewer					
1000 Gal Septic			1	4,899	2,401
Water Well, 100 Feet			1	5,849	2,866
Deck					
Treated Wood			53	1,832	898
Treated Wood			12	552	270
Garages					
Class: C Exterior: Pole (Unfinished)					
Base Cost			720	19,764	9,684
			Totals:	121,930	59,747

Notes:

ECF (RESIDENTIAL) 1.297 => TCV: 77,492

*** Information herein deemed reliable but not guaranteed***

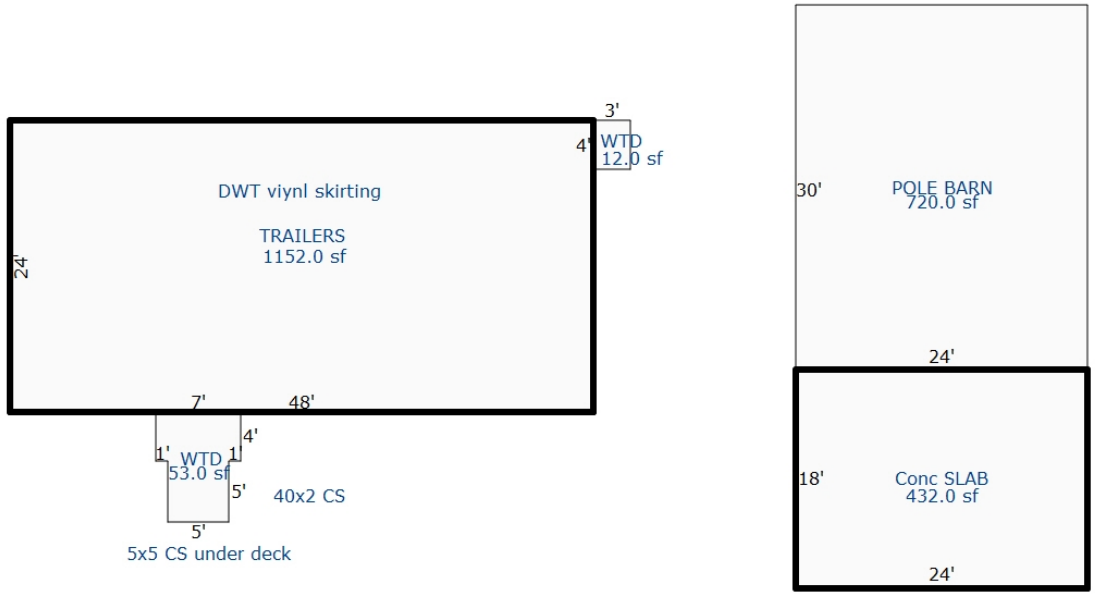

Sketch by Apex Sketch

*** Information herein deemed reliable but not guaranteed***

Parcel Number: 2410-35-1304 Jurisdiction: GREENWOOD TWP County: WEXFORD Printed on 02/15/2024

Grantor	Grantee	Sale Price	Sale Date	Inst. Type	Terms of Sale	Liber & Page	Verified By	Prcnt. Trans.
SCHMITT, MICHAEL C.	HOYT, FREDERICK, AUDREY &	45,000	08/03/2022	WD	03-ARM'S LENGTH	693/1804	DEED	100.0

Property Address

Owner's Name/Address

HOYT, FREDERICK, AUDREY & JOHN
PO BOX 383
KINGSLEY MI 49649

Tax Description

PARCEL "C" BEING A PART OF SW 1/4 OF NE 1/4 DESC AS: COM AT E 1/4 COR, TH TH W 1701.76 FT TO POB: W 224.65 FT; N 1329.71 FT TO N 1/8 LINE; E 223.51 FT; S 1329.53 FT TO POB. -6.84 A. M/L- GW. SEC. 35 T24N R10W -MANTON-

Comments/Influences

The Equalizer. Copyright (c) 1999 - 2009. Licensed To: Township of Greenwood, County of Wexford, Michigan

Class: RESIDENTIAL-VACANT Zoning:

School: MANTON CONSOLIDATED SCHOOLS

P.R.E. 0%

:

2024 Est TCV 34,097

	Improved	X	Vacant

	Public Improvements
X	Dirt Road
X	Gravel Road
	Paved Road
	Storm Sewer
	Sidewalk
	Water
	Sewer
X	Electric
	Gas
	Curb
	Street Lights
	Standard Utilities
	Underground Utils.

	Topography of Site
	Level
X	Rolling
X	Low
X	High
	Landscaped
X	Swamp
X	Wooded
	Pond
	Waterfront
	Ravine
	Wetland
	Flood Plain
X	OPEN/PINES

Who	When	What
GLA	05/11/2020	INSPECTION
GLA	07/10/2019	INSPECTION
GLA	07/10/2019	INSPECTION

Building Permit(s)	Date	Number	Status

Land Value Estimates for Land Table 4010.LAND VALUES

Description	Frontage	Depth	* Factors * Front	Depth	Rate	%Adj.	Reason	Value
ACREAGE			6.670 Acres		5,112	100		34,097
ROW			0.170 Acres		0	100		0
			6.84 Total Acres		Total Est. Land Value =			34,097

Year	Land Value	Building Value	Assessed Value	Board of Review	Tribunal/ Other	Taxable Value
2024	17,000	0	17,000			12,285C
2023	11,700	0	11,700			11,700S
2022	10,000	0	10,000			5,497C
2021	11,300	0	11,300			5,322C

*** Information herein deemed reliable but not guaranteed***

Parcel Number: 2410-35-1401 Jurisdiction: GREENWOOD TWP County: WEXFORD Printed on 02/15/2024

Grantor	Grantee	Sale Price	Sale Date	Inst. Type	Terms of Sale	Liber & Page	Verified By	Prcnt. Trans.
WEXFORD COUNTY TREASURER	DARNELL, DANIEL W	6,500	10/10/2008	QC	21-NOT USED/OTHER	615/228	DEED	100.0
CARSTEN, ROBERT W	WEXFORD COUNTY TREASURER	3,386	04/01/2008	OTH	21-NOT USED/OTHER	609/471	DEED	0.0
CARSTEN, JOSEPH & TRACEY	CARSTEN, ROBERT W	7,500	04/10/2003	QC	09-FAMILY	532:469	DEED	0.0
CARRIER, ABELBERT W.	CARSTEN, JOSEPH L.	14,500	10/21/1993	LC	03-ARM'S LENGTH	338:247	DEED	0.0

Property Address

6675 N 35 RD

Owner's Name/Address

DARNELL, DANIEL W
6953 N 35 RD
MANTON MI 49663

Tax Description

PAR DESC AS COM AT E 1/4 COR OF SEC; N 948.73 FT TO POB: W 387.99 FT; S 90.52 FT; W 216.16 FT; N26D45M28S E 333 FT; E 239.94 FT; S 50 FT; E 214.5 FT; S 165 FT TO POB. 2.65 A M/L- SUB TO & TOG W/ EASMT AKA PAR A GW. SEC. 35 T24N R10W -MANTON- COMBINED W/ 2410-35-1408 ON 2/11/09

Comments/Influences

The Equalizer. Copyright (c) 1999 - 2009. Licensed To: Township of Greenwood, County of Wexford, Michigan

Class: RESIDENTIAL-IMPROV Zoning:

School: MANTON CONSOLIDATED SCHOOLS

P.R.E. 0%

:

2024 Est TCV 85,010 TCV/TFA: 65.59

Building Permit(s)	Date	Number	Status
RESIDENTIAL - NEW	01/31/2005	PB12597	

X Improved | Vacant

	Public Improvements
	Dirt Road
X	Gravel Road
	Paved Road
	Storm Sewer
	Sidewalk
	Water
	Sewer
X	Electric
	Gas
	Curb
	Street Lights
	Standard Utilities
	Underground Utils.

	Topography of Site
X	Level
	Rolling
	Low
	High
	Landscaped
	Swamp
X	Wooded
	Pond
	Waterfront
	Ravine
	Wetland
	Flood Plain
X	OPEN

Who	When	What
GLA	05/11/2020	INSPECTION
GLA	07/10/2019	INSPECTION
GLA	07/10/2019	INSPECTION

Land Value Estimates for Land Table 4010.LAND VALUES

Description	Frontage	Depth	* Factors * Front	Depth	Rate	%Adj.	Reason	Value
ACREAGE			2.525 Acres		5,546	100		14,004
ROW			0.125 Acres		0	100		0
			2.65 Total Acres		Total Est. Land Value =			14,004

Year	Land Value	Building Value	Assessed Value	Board of Review	Tribunal/ Other	Taxable Value
2024	7,000	35,500	42,500			23,886C
2023	6,900	29,800	36,700			22,749C
2022	5,700	25,800	31,500			21,666C
2021	5,300	23,000	28,300			20,974C

*** Information herein deemed reliable but not guaranteed***

Building Type

	Single Family
X	Mobile Home
	Town Home
	Duplex
	A-Frame

X	Wood Frame

Building Style: SWT/DWT

Yr Built	Remodeled
2001	0

Condition: Good

Room List

	Basement
	1st Floor
	2nd Floor
	Bedrooms

(1) Exterior

	Wood/Shingle
X	Aluminum/Vinyl
	Brick
X	Insulation

(2) Windows

	Many		Large
X	Avg.	X	Avg.
	Few		Small

	Wood Sash
	Metal Sash
X	Vinyl Sash
	Double Hung
	Horiz. Slide
	Casement
	Double Glass
	Patio Doors
X	Storms & Screens

(3) Roof

X	Gable		Gambrel
	Hip		Mansard
	Flat		Shed

X	Asphalt Shingle

Chimney:

(3) Roof (cont.)

	Eavestrough
X	Insulation
0	Front Overhang
0	Other Overhang

(4) Interior

X	Drywall		Plaster
	Paneled		Wood T&G

Trim & Decoration

	Ex	X	Ord		Min

Size of Closets

	Lg	X	Ord		Small

Doors:		Solid	X	H.C.	

(5) Floors

Kitchen:
Other: Linoleum
Other: Carpeted

(6) Ceilings

X	Drywall		

(7) Excavation

Basement: 0 S.F.
Crawl: 0 S.F.
Slab: 0 S.F.
Height to Joists: 0.0

(8) Basement

	Conc. Block
	Poured Conc.
	Stone
	Treated Wood
	Concrete Floor

(9) Basement Finish

	Recreation SF
	Living SF
	Walkout Doors (B)
	No Floor SF
	Walkout Doors (A)

(10) Floor Support

Joists:
Unsupported Len:
Cntr.Sup:

(11) Heating/Cooling

X	Gas		Oil		Elec.
	Wood		Coal		Steam

X	Forced Warm Air
	Wall Furnace
	Warm & Cool Air
	Heat Pump
	Central Air
	Wood Furnace

(12) Electric

150	Amps Service

No./Qual. of Fixtures

	Ex.	X	Ord.		Min

No. of Elec. Outlets

	Many	X	Ave.		Few

(13) Plumbing

	Average Fixture(s)
2	3 Fixture Bath
	2 Fixture Bath
	Softener, Auto
	Softener, Manual
	Solar Water Heat
	No Plumbing
	Extra Toilet
	Extra Sink
	Separate Shower
	Ceramic Tile Floor
	Ceramic Tile Wains
	Ceramic Tub Alcove
	Vent Fan

(14) Water/Sewer

	Public Water
	Public Sewer
1	Water Well
1	1000 Gal Septic
	2000 Gal Septic

Lump Sum Items:

(15) Built-ins

	Appliance Allow.
	Cook Top
	Dishwasher
	Garbage Disposal
	Bath Heater
	Vent Fan
	Hot Tub
	Unvented Hood
	Vented Hood
	Intercom
	Jacuzzi Tub
	Jacuzzi repl.Tub
	Oven
	Microwave
	Standard Range
	Self Clean Range
	Sauna
	Trash Compactor
	Central Vacuum
	Security System

(15) Fireplaces

	Interior 1 Story
	Interior 2 Story
	2nd/Same Stack
	Two Sided
	Exterior 1 Story
	Exterior 2 Story
	Prefab 1 Story
	Prefab 2 Story
	Heat Circulator
	Raised Hearth
	Wood Stove
	Direct-Vented Gas

Class: Average
Effec. Age: 24
Floor Area:
Total Base New : 116,479 E.C.F.
Total Depr Cost: 54,746 X 1.297
Estimated T.C.V: 71,006

(16) Porches/Decks

Area	Type
170	WPP

(17) Garage

Year Built:
Car Capacity:
Class:
Exterior:
Brick Ven.:
Stone Ven.:
Common Wall:
Foundation:
Finished ?:
Auto. Doors:
Mech. Doors:
Area:
% Good:
Storage Area:
No Conc. Floor:

Bsmnt Garage:

Carport Area:
Roof:

Cost Est. for Res. Bldg: 1 Mobile Home SWT/DWT Cls Average Blt 2001
(11) Heating System: Forced Warm Air
Ground Area = 1296 SF Floor Area = 1296 SF.
Phy/Ab.Phy/Func/Econ/Comb. % Good=47/100/100/100/47
Building Areas

Type	Ext. Walls	Roof/Fnd.	Size	Cost New	Depr. Cost
Main Home	Siding	Comp.Shingle	1296		
			Total:	88,265	41,484
Other Additions/Adjustments					
42" frost-free footings, foundation			150	8,910	4,188
Plumbing					
3 Fixture Bath			1	3,075	1,445
Water/Sewer					
1000 Gal Septic			1	4,899	2,303
Water Well, 100 Feet			1	5,849	2,749
Porches					
WPP			170	4,233	1,990
Local Cost Items					
SHED #2			160	1,248	587
			Totals:	116,479	54,746

Notes:

ECF (RESIDENTIAL) 1.297 => TCV: 71,006

*** Information herein deemed reliable but not guaranteed***

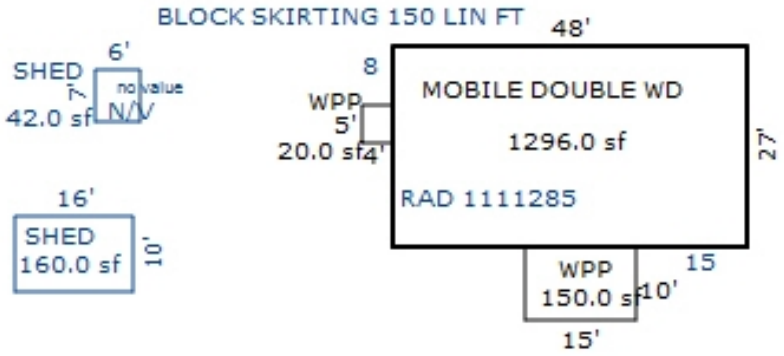

Sketch by Apex Sketch

*** Information herein deemed reliable but not guaranteed***

Parcel Number: 2410-35-1402 Jurisdiction: GREENWOOD TWP County: WEXFORD Printed on 02/15/2024

Grantor	Grantee	Sale Price	Sale Date	Inst. Type	Terms of Sale	Liber & Page	Verified By	Prcnt. Trans.

Property Address
6735 N 35 RD
Owner's Name/Address
GREENWOOD TOWNSHIP

Class: COMMERCIAL-IMPROVE Zoning:
School: MANTON CONSOLIDATED SCHOOLS
P.R.E. 0%
:
2024 Est TCV 0 TCV/TFA: 0.00

Building Permit(s)	Date	Number	Status
COMMERCIAL - REMODEL	06/28/2002	PE14576	
COMMERCIAL - NEW	06/26/2002	PP2660	
RESIDENTIAL - REMODEL	06/13/2002	PB10996	

Tax Description
1 SQ A IN NE COR OF SE 1/4 OF NE 1/4 1 A. GW. SEC. 35 T24N R10W -MANTON-
Comments/Influences

The Equalizer. Copyright (c) 1999 - 2009. Licensed To: Township of Greenwood, County of Wexford, Michigan

X	Improved		Vacant

	Public Improvements
	Dirt Road
X	Gravel Road
	Paved Road
	Storm Sewer
	Sidewalk
	Water
	Sewer
X	Electric
	Gas
	Curb
	Street Lights
	Standard Utilities
	Underground Utils.

	Topography of Site
X	Level
X	Rolling
	Low
	High
	Landscaped
	Swamp
X	Wooded
	Pond
	Waterfront
	Ravine
	Wetland
	Flood Plain
X	OPEN/PINES

Who	When	What
GLA	05/13/2021	INSPECTION
GLA	07/10/2019	INSPECTION
GLA	07/10/2019	INSPECTION

Land Value Estimates for Land Table 4010.LAND VALUES

Description	Frontage	Depth	* Factors * Front	Depth	Rate	%Adj.	Reason	Value
ACREAGE			0.842 Acres		10,953	100		9,222
ROW			0.158 Acres		0	100		0
			1.00 Total Acres		Total Est. Land Value =			9,222

Land Improvement Cost Estimates

Description	Rate	Size	% Good	Cash Value
D/W/P: 4in Concrete	6.19	90	46	256
D/W/P: 4in Concrete	6.19	520	46	1,481
D/W/P: 4in Concrete	6.19	192	46	546
D/W/P: 4in Concrete	6.19	128	46	364
Wood Frame	23.90	96	36	826
Total Estimated Land Improvements True Cash Value =				3,473

Year	Land Value	Building Value	Assessed Value	Board of Review	Tribunal/ Other	Taxable Value
2024	EXEMPT	EXEMPT	EXEMPT			EXEMPT
2023	EXEMPT	EXEMPT	EXEMPT			EXEMPT
2022	0	0	0			0
2021	0	0	0			0

*** Information herein deemed reliable but not guaranteed***

Desc. of Bldg/Section:
Calculator Occupancy: Governmental Buildings

Class: D
Floor Area: 1,745
Gross Bldg Area: 1,745
Stories Above Grd: 1
Average Sty Hght : 10
Bsmnt Wall Hght

Depr. Table : 2%
Effective Age : 57
Physical %Good: 40
Func. %Good : 100
Economic %Good: 100

Year Built
Remodeled

Overall Bldg
Height

Comments:

Construction Cost

	High		Above Ave.		Ave.	X	Low

** ** Calculator Cost Data ** **
Quality: Low Cost
Heat#1: Forced Air Furnace 100%
Heat#2: Electric, Cable or Baseboard 0%
Ave. SqFt/Story: 1745
Ave. Perimeter: 205
Has Elevators:

*** Basement Info ***
Area:
Perimeter:
Type:
Heat:

* Mezzanine Info *
Area #1:
Type #1:
Area #2:
Type #2:

* Sprinkler Info *
Area:
Type: Low

<<<<< Calculator Cost Computations >>>>>
Class: D Quality: Low Cost
Stories: 1 Story Height: 10 Perimeter: 205

Base Rate for Upper Floors = 133.74

(10) Heating system: Forced Air Furnace Cost/SqFt: 20.36 100%
Adjusted Square Foot Cost for Upper Floors = 154.10

Total Floor Area: 1,745 Base Cost New of Upper Floors = 268,904

Reproduction/Replacement Cost = 268,904
Eff.Age:57 Phy.%Good/Abnr.Phy./Func./Econ./Overall %Good: 40 /100/100/100/40.0
Total Depreciated Cost = 107,562

Unit in Place Items	Rate	Quantity	Arch	%Good	Depr.Cost
/CI16/YARI/RAIPD/100S/DECFPEA	20.00	112	1.00	30	672
/CI16/YARI/PATR/PICSL	23.59	192	1.00	30	1,359

ECF (RESIDENTIAL) 1.000 => TCV of Bldg: 1 = 109,593
Replacement Cost/Floor Area= 157.98 Est. TCV/Floor Area= 62.80

(1) Excavation/Site Prep:

(2) Foundation: Footings
X Poured Conc. Brick/Stone Block

(3) Frame:

(4) Floor Structure:

(5) Floor Cover:

(6) Ceiling:

(7) Interior:

(8) Plumbing:

	Many Above Ave.		Average Typical		Few None

	Total Fixtures		Urinals
	3-Piece Baths		Wash Bowls
	2-Piece Baths		Water Heaters
	Shower Stalls		Wash Fountains
	Toilets		Water Softeners

(9) Sprinklers:

(10) Heating and Cooling:

	Gas Oil		Coal Stoker		Hand Fired Boiler

(11) Electric and Lighting:

Outlets:		Fixtures:
Few		Few
Average		Average
Many		Many
Unfinished		Unfinished
Typical		Typical
Flex Conduit		Incandescent
Rigid Conduit		Fluorescent
Armored Cable		Mercury
Non-Metalic		Sodium Vapor
Bus Duct		Transformer

(13) Roof Structure: Slope=0

(14) Roof Cover:

(39) Miscellaneous:

(40) Exterior Wall:

	Thickness		Bsmnt Insul.

*** Information herein deemed reliable but not guaranteed***

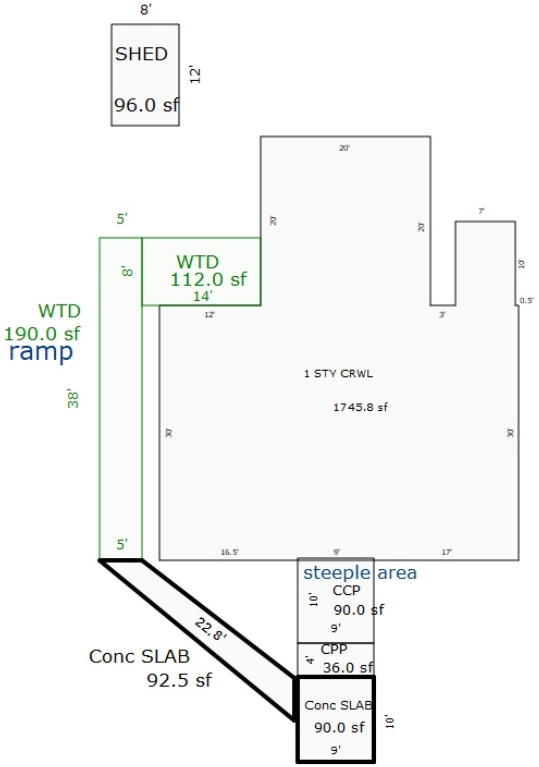

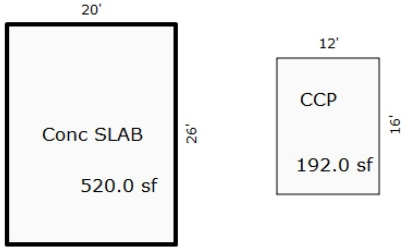

Sketch by Apex Sketch

*** Information herein deemed reliable but not guaranteed***

Parcel Number: 2410-35-1403 Jurisdiction: GREENWOOD TWP County: WEXFORD Printed on 02/15/2024

Grantor	Grantee	Sale Price	Sale Date	Inst. Type	Terms of Sale	Liber & Page	Verified By	Prcnt. Trans.
DARABOS, CURT J	ZARTMAN, RONALD R & LOIS G	77,000	09/27/2022	WD	03-ARM'S LENGTH	693/2926	DEED	100.0
BLOSSINGHAM, GEORGE S, LE	DARABOS, CURT J	28,000	10/14/2016	WD	03-ARM'S LENGTH	6781/990	DEED	100.0
BLOSSINGHAM, GEORGE		0	12/02/2014	OTH	21-NOT USED/OTHER	672/2288	DEED	0.0
BLOSSINGHAM, GEORGE	BLOSSINGHAM, GEORGE LE ETA	0	05/04/2010	QC	09-FAMILY	631/1851	DEED	0.0

Property Address

6501 N 35 RD

Owner's Name/Address

ZARTMAN, RONALD R & LOIS G
5105 8TH AVE
GRANDVILLE MI 49418

Tax Description

E 20 RDS OF S 8 RDS OF SE 1/4 OF NE 1/4 --1 A.-- GW. SEC. 35 T24N R10W -MANTON-

Comments/Influences

Class: RESIDENTIAL-IMPROV Zoning:

School: MANTON CONSOLIDATED SCHOOLS

P.R.E. 0%

:

2024 Est TCV 71,133 TCV/TFA: 58.50

Building Permit(s)	Date	Number	Status
RESIDENTIAL - REMODEL	03/01/2005	PM8319	

X	Improved		Vacant

	Public Improvements
	Dirt Road
X	Gravel Road
	Paved Road
	Storm Sewer
	Sidewalk
	Water
	Sewer
X	Electric
	Gas
	Curb
	Street Lights
	Standard Utilities
	Underground Utils.

	Topography of Site
X	Level
	Rolling
	Low
	High
	Landscaped
	Swamp
X	Wooded
	Pond
	Waterfront
	Ravine
	Wetland
	Flood Plain
X	OPEN

Who	When	What
GLA	05/11/2020	INSPECTION
GLA	07/10/2019	INSPECTION
GLA	07/10/2019	INSPECTION

Land Value Estimates for Land Table 4010.LAND VALUES

Description	Frontage	Depth	* Factors * Front	Depth	Rate	%Adj.	Reason	Value
	132.00	330.00	1.0000	0.0000	0	100*		0
ACREAGE			0.627 Acres		10,953	100		6,868
ROW			0.373 Acres		0	100		0

* denotes lines that do not contribute to the total acreage calculation.

132 Actual Front Feet, 1.00 Total Acres Total Est. Land Value = 6,868

Year	Land Value	Building Value	Assessed Value	Board of Review	Tribunal/ Other	Taxable Value
2024	3,400	32,200	35,600			29,190C
2023	1,900	25,900	27,800			27,800S
2022	1,600	21,500	23,100			17,930C
2021	1,900	18,400	20,300			17,358C

The Equalizer. Copyright (c) 1999 - 2009.
Licensed To: Township of Greenwood, County of Wexford, Michigan

*** Information herein deemed reliable but not guaranteed***

Building Type

	Single Family
X	Mobile Home
	Town Home
	Duplex
	A-Frame

X	Wood Frame

Building Style: SWT/DWT

Yr Built	Remodeled
0	0

Condition: Good

Room List

	Basement
	1st Floor
	2nd Floor
	Bedrooms

(1) Exterior

	Wood/Shingle
X	Aluminum/Vinyl
	Brick
X	Insulation

(2) Windows

	Many		Large
X	Avg.	X	Avg.
	Few		Small

	Wood Sash
	Metal Sash
X	Vinyl Sash
	Double Hung
	Horiz. Slide
	Casement
	Double Glass
	Patio Doors
X	Storms & Screens

(3) Roof

X	Gable		Gambrel
	Hip		Mansard
	Flat		Shed

X	Asphalt Shingle

Chimney:

(3) Roof (cont.)

	Eavestrough
X	Insulation
0	Front Overhang
0	Other Overhang

(4) Interior

X	Drywall		Plaster
	Paneled		Wood T&G

Trim & Decoration

	Ex	X	Ord		Min

Size of Closets

	Lg	X	Ord		Small

Doors:		Solid	X	H.C.	

(5) Floors

Kitchen:
Other: Linoleum
Other: Carpeted

(6) Ceilings

X	Drywall		

(7) Excavation

Basement: 0 S.F.
Crawl: 0 S.F.
Slab: 0 S.F.
Height to Joists: 0.0

(8) Basement

	Conc. Block
	Poured Conc.
	Stone
	Treated Wood
	Concrete Floor

(9) Basement Finish

	Recreation SF
	Living SF
	Walkout Doors (B)
	No Floor SF
	Walkout Doors (A)

(10) Floor Support

Joists:
Unsupported Len:
Cntr.Sup:

(11) Heating/Cooling

X	Gas		Oil		Elec.
	Wood		Coal		Steam

X	Forced Warm Air
	Wall Furnace
	Warm & Cool Air
	Heat Pump

	Central Air
	Wood Furnace

(12) Electric

150	Amps Service

No./Qual. of Fixtures

	Ex.	X	Ord.		Min

No. of Elec. Outlets

	Many	X	Ave.		Few

(13) Plumbing

	Average Fixture(s)
2	3 Fixture Bath
	2 Fixture Bath
	Softener, Auto
	Softener, Manual
	Solar Water Heat
	No Plumbing
	Extra Toilet
	Extra Sink
	Separate Shower
	Ceramic Tile Floor
	Ceramic Tile Wains
	Ceramic Tub Alcove
	Vent Fan

(14) Water/Sewer

	Public Water
	Public Sewer
1	Water Well
1	1000 Gal Septic
	2000 Gal Septic

Lump Sum Items:

(15) Built-ins

	Appliance Allow.
	Cook Top
	Dishwasher
	Garbage Disposal
	Bath Heater
	Vent Fan
	Hot Tub
	Unvented Hood
	Vented Hood
	Intercom
	Jacuzzi Tub
	Jacuzzi repl.Tub
	Oven
	Microwave
	Standard Range
	Self Clean Range
	Sauna
	Trash Compactor
	Central Vacuum
	Security System

(15) Fireplaces

	Interior 1 Story
	Interior 2 Story
	2nd/Same Stack
	Two Sided
	Exterior 1 Story
	Exterior 2 Story
	Prefab 1 Story
	Prefab 2 Story
	Heat Circulator
	Raised Hearth
	Wood Stove
	Direct-Vented Gas

Class: Average
Effec. Age: 24
Floor Area:
Total Base New : 105,424 E.C.F.
Total Depr Cost: 49,549 X 1.297
Estimated T.C.V: 64,265

(16) Porches/Decks

Area	Type
174	WPP

(17) Garage

Year Built:
Car Capacity:
Class: CD
Exterior: Pole
Brick Ven.: 0
Stone Ven.: 0
Common Wall: Detache
Foundation: 18 Inch
Finished ?:
Auto. Doors: 0
Mech. Doors: 0
Area: 576
% Good: 0
Storage Area: 0
No Conc. Floor: 0

Bsmnt Garage:

Carport Area:
Roof:

Cost Est. for Res. Bldg: 1 Mobile Home SWT/DWT Cls Average Blt 0
(11) Heating System: Forced Warm Air
Ground Area = 1216 SF Floor Area = 1216 SF.
Phy/Ab.Phy/Func/Econ/Comb. % Good=47/100/100/100/47
Building Areas

Type	Ext. Walls	Roof/Fnd.	Size	Cost New	Depr. Cost
Main Home	Siding	Comp.Shingle	1216		
			Total:	69,312	32,576
Other Additions/Adjustments					
Skirting, Plywd/Hrdbd			184	2,359	1,109
Plumbing					
3 Fixture Bath			1	3,075	1,445
Water/Sewer					
1000 Gal Septic			1	4,899	2,303
Water Well, 100 Feet			1	5,849	2,749
Porches					
WPP			174	4,291	2,017
Garages					
Class: CD Exterior: Pole (Unfinished)					
Base Cost			576	14,953	7,028
Local Cost Items					
SHED #2			88	686	322
			Totals:	105,424	49,549

Notes:

ECF (RESIDENTIAL) 1.297 => TCV: 64,265

*** Information herein deemed reliable but not guaranteed***

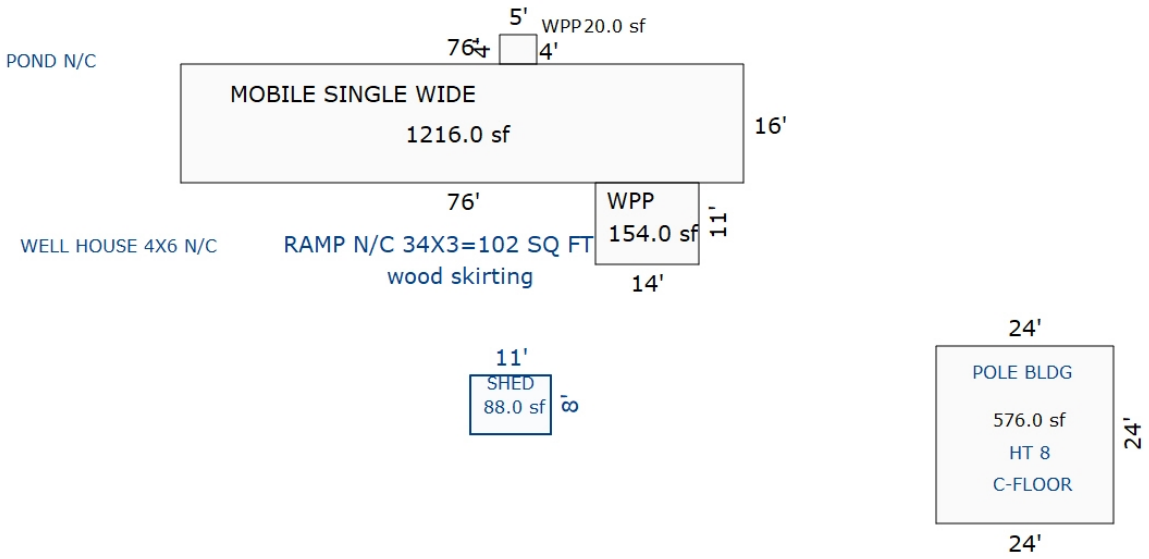

Sketch by Apex Sketch

*** Information herein deemed reliable but not guaranteed***

Parcel Number: 2410-35-1404 Jurisdiction: GREENWOOD TWP County: WEXFORD Printed on 02/15/2024

Grantor	Grantee	Sale Price	Sale Date	Inst. Type	Terms of Sale	Liber & Page	Verified By	Prcnt. Trans.
ROLLINS, STEPHEN W	DE ROSHA, ADAM	0	03/30/2015	QC	21-NOT USED/OTHER	674/2064	DEED	100.0
SWINEHART, CARL & BRYAN	ROLLINS, STEPHEN	7,000	10/24/2005	QC	09-FAMILY	579:2120	DEED	0.0
MILLIRON, DONALD D.	SWINEHART, MARY L. & GEORG	17,000	11/06/1999	LC	03-ARM'S LENGTH	371:260	DEED	0.0

Property Address

4951 E 12 1/2 RD

Owner's Name/Address

DE ROSHA, ADAM
4951 E 12 1/2 RD
MANTON MI 49663

Tax Description

S 8 RDS OF W 20 RDS OF E 1/2 OF SE 1/4 OF NE 1/4 EXC HWY R/W --1. A. M/L-- GW. SEC. 35 T24N R10W -MANTON-

Comments/Influences

The Equalizer. Copyright (c) 1999 - 2009.
Licensed To: Township of Greenwood, County of Wexford, Michigan

Class: RESIDENTIAL-IMPROV Zoning:

School: MANTON CONSOLIDATED SCHOOLS

P.R.E. 100% 09/15/2017

:

2024 Est TCV 52,253 TCV/TFA: 57.42

Building Permit(s)	Date	Number	Status

X	Improved		Vacant

	Public Improvements
	Dirt Road
X	Gravel Road
	Paved Road
	Storm Sewer
	Sidewalk
	Water
	Sewer
X	Electric
	Gas
	Curb
	Street Lights
	Standard Utilities
	Underground Utils.

	Topography of Site
X	Level
	Rolling
	Low
	High
	Landscaped
	Swamp
X	Wooded
	Pond
	Waterfront
	Ravine
	Wetland
	Flood Plain
X	OPEN

Who	When	What
GLA	05/11/2020	INSPECTION
GLA	07/10/2019	INSPECTION
GLA	07/10/2019	INSPECTION

Land Value Estimates for Land Table 4010.LAND VALUES

Description	Frontage	Depth	* Factors * Front	Depth	Rate	%Adj.	Reason	Value
ACREAGE			0.627 Acres		10,953	100		6,868
ROW			0.373 Acres		0	100		0
			1.00 Total Acres		Total Est. Land Value =			6,868

Land Improvement Cost Estimates

Description	Rate	Size	% Good	Cash Value
Wood Frame	28.14	63	42	745
Wood Frame	21.55	144	42	1,303
Total Estimated Land Improvements True Cash Value =				2,048

Year	Land Value	Building Value	Assessed Value	Board of Review	Tribunal/ Other	Taxable Value
2024	3,400	22,700	26,100			13,531C
2023	1,900	18,500	20,400			12,887C
2022	1,600	15,600	17,200			12,274C
2021	1,900	13,500	15,400			11,882C

*** Information herein deemed reliable but not guaranteed***

Building Type

	Single Family
X	Mobile Home
	Town Home
	Duplex
	A-Frame

X	Wood Frame

Building Style: SWT/DWT

Yr Built	Remodeled
0	0

Condition: Good

Room List

	Basement
	1st Floor
	2nd Floor
	Bedrooms

(1) Exterior

	Wood/Shingle
X	Aluminum/Vinyl
	Brick
X	Insulation

(2) Windows

	Many		Large
X	Avg.	X	Avg.
	Few		Small

	Wood Sash
	Metal Sash
X	Vinyl Sash
	Double Hung
	Horiz. Slide
	Casement
	Double Glass
	Patio Doors
X	Storms & Screens

(3) Roof

X	Gable		Gambrel
	Hip		Mansard
	Flat		Shed

X	Asphalt Shingle

Chimney:

(3) Roof (cont.)

	Eavestrough
X	Insulation
0	Front Overhang
0	Other Overhang

(4) Interior

X	Drywall		Plaster
	Paneled		Wood T&G

Trim & Decoration

	Ex	X	Ord		Min

Size of Closets

	Lg	X	Ord		Small

Doors:		Solid	X	H.C.	

(5) Floors

Kitchen:
Other: Linoleum
Other: Carpeted

(6) Ceilings

X	Drywall		

(7) Excavation

Basement: 0 S.F.
Crawl: 0 S.F.
Slab: 0 S.F.
Height to Joists: 0.0

(8) Basement

	Conc. Block
	Poured Conc.
	Stone
	Treated Wood
	Concrete Floor

(9) Basement Finish

	Recreation SF
	Living SF
	Walkout Doors (B)
	No Floor SF
	Walkout Doors (A)

(10) Floor Support

Joists:
Unsupported Len:
Cntr.Sup:

(11) Heating/Cooling

X	Gas		Oil		Elec.
	Wood		Coal		Steam

X	Forced Warm Air
	Wall Furnace
	Warm & Cool Air
	Heat Pump

	Central Air
	Wood Furnace

(12) Electric

150	Amps Service

No./Qual. of Fixtures

	Ex.	X	Ord.		Min

No. of Elec. Outlets

	Many	X	Ave.		Few

(13) Plumbing

	Average Fixture(s)
1	3 Fixture Bath
	2 Fixture Bath
	Softener, Auto
	Softener, Manual
	Solar Water Heat
	No Plumbing
	Extra Toilet
	Extra Sink
	Separate Shower
	Ceramic Tile Floor
	Ceramic Tile Wains
	Ceramic Tub Alcove
	Vent Fan

(14) Water/Sewer

	Public Water
	Public Sewer
1	Water Well
1	1000 Gal Septic
	2000 Gal Septic

Lump Sum Items:

(15) Built-ins

	Appliance Allow.
	Cook Top
	Dishwasher
	Garbage Disposal
	Bath Heater
	Vent Fan
	Hot Tub
	Unvented Hood
	Vented Hood
	Intercom
	Jacuzzi Tub
	Jacuzzi repl.Tub
	Oven
	Microwave
	Standard Range
	Self Clean Range
	Sauna
	Trash Compactor
	Central Vacuum
	Security System

(15) Fireplaces

	Interior 1 Story
	Interior 2 Story
	2nd/Same Stack
	Two Sided
	Exterior 1 Story
	Exterior 2 Story
	Prefab 1 Story
	Prefab 2 Story
	Heat Circulator
	Raised Hearth
	Wood Stove
	Direct-Vented Gas

Class: Fair
Effec. Age: 25
Floor Area:
Total Base New : 95,376 E.C.F.
Total Depr Cost: 33,413 X 1.297
Estimated T.C.V: 43,337

(16) Porches/Decks

Area	Type
276	WGEP (1 Story)
54	CCP (1 Story)
56	WGEP (1 Story)
72	WCP (1 Story)
72	Treated Wood

(17) Garage

Year Built:
Car Capacity:
Class:
Exterior:
Brick Ven.:
Stone Ven.:
Common Wall:
Foundation:
Finished ?:
Auto. Doors:
Mech. Doors:
Area:
% Good:
Storage Area:
No Conc. Floor:

Bsmnt Garage:

Carport Area:
Roof:

Cost Est. for Res. Bldg: 1 Mobile Home SWT/DWT Cls Fair Blt 0
(11) Heating System: Forced Warm Air
Ground Area = 910 SF Floor Area = 910 SF.
Phy/Ab.Phy/Func/Econ/Comb. % Good=35/100/100/100/35
Building Areas

Type	Ext. Walls	Roof/Fnd.	Size	Cost New	Depr. Cost	
Main Home	Ribbed	Metal	910			
			Total:	49,245	17,236	
Other Additions/Adjustments						
Skirting, Metal or Vinyl, Vertical			158	1,762	617	
Water/Sewer						
1000 Gal Septic			1	4,582	1,604	
Water Well, 100 Feet			1	5,680	1,988	
Porches						
WGEP (1 Story)			276	14,316	5,011	
CCP (1 Story)			54	1,241	434	
WGEP (1 Story)			56	4,765	1,668	
WCP (1 Story)			72	3,309	1,158	
Deck						
Treated Wood w/Roof (Deck Portion)			72	2,107	737	
Treated Wood w/Roof (Roof portion)			72	1,263	442	
Local Cost Items						
POLE LEANTO DIRT			140	518	212	*4
FREE STANDING ROOF			910	6,588	2,306	
			Totals:	95,376	33,413	

Notes:

ECF (RESIDENTIAL) 1.297 => TCV: 43,337

*** Information herein deemed reliable but not guaranteed***

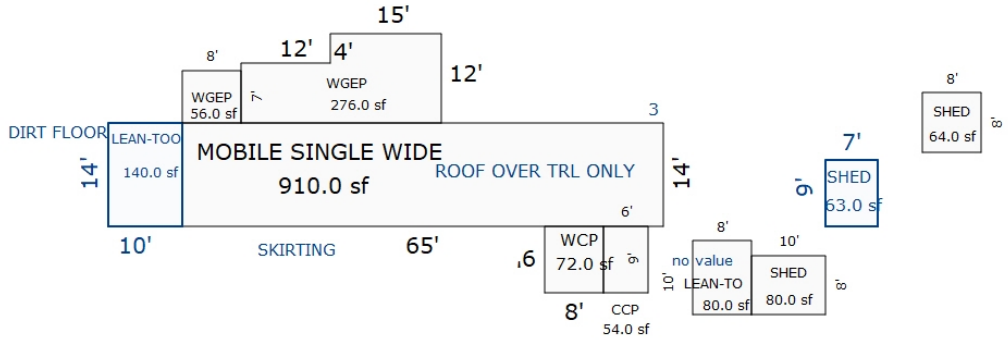

Sketch by Apex Sketch

*** Information herein deemed reliable but not guaranteed***

Parcel Number: 2410-35-1405 Jurisdiction: GREENWOOD TWP County: WEXFORD Printed on 02/15/2024

Grantor	Grantee	Sale Price	Sale Date	Inst. Type	Terms of Sale	Liber & Page	Verified By	Prcnt. Trans.
PUCKETT, BRIAN A & ASHLEY	HANSEN, KELSEY LYNN	187,500	12/31/2021	WD	03-ARM'S LENGTH	691/2604	DEED	100.0
GREEN, STEVEN B. JR.	PUCKETT, BRIAN A & ASHLEY	111,000	12/27/2018	WD	03-ARM'S LENGTH	6843/01	DEED	100.0
BARZ, JAMES W.	GREEN JR., STEVEN & JERE	58,500	06/26/1997	WD	03-ARM'S LENGTH	355:535	DEED	0.0
LETTS, MARY H.	BARZ, JAMES W.	46,250	09/10/1993	WD	03-ARM'S LENGTH	336:104	DEED	0.0

Property Address

4861 E 12 1/2 RD

Owner's Name/Address

HANSEN, KELSEY LYNN
4861 E 12 1/2 RD
MANTON MI 49663

Tax Description

S 1040 FT OF E 208 FT OF W 1/2 OF SE 1/4 OF NE 1/4 --4.97 A M/L-- GW. SEC. 35 T24N R10W -MANTON-

Comments/Influences

The Equalizer. Copyright (c) 1999 - 2009.
Licensed To: Township of Greenwood, County of Wexford, Michigan

Class: RESIDENTIAL-IMPROV Zoning:
School: MANTON CONSOLIDATED SCHOOLS
P.R.E. 100% 01/09/2022
:
2024 Est TCV 162,915 TCV/TFA: 102.85

Building Permit(s)	Date	Number	Status

X Improved | Vacant

Public Improvements

	Dirt Road
X	Gravel Road
	Paved Road
	Storm Sewer
	Sidewalk
	Water
	Sewer
X	Electric
	Gas
	Curb
	Street Lights
	Standard Utilities
	Underground Utils.

Topography of Site

	Level
X	Rolling
X	Low
	High
	Landscaped
	Swamp
X	Wooded
	Pond
	Waterfront
	Ravine
	Wetland
	Flood Plain
X	OPEN/PINES

Who	When	What
GLA	05/11/2020	INSPECTION
GLA	07/10/2019	INSPECTION
GLA	07/10/2019	INSPECTION

Land Value Estimates for Land Table 4010.LAND VALUES

Description	Frontage	Depth	* Factors * Front	Depth	Rate	%Adj.	Reason	Value
ACREAGE			4.810 Acres		5,099	100		24,526
ROW			0.160 Acres		0	100		0
			4.97 Total Acres		Total Est. Land Value =			24,526

Land Improvement Cost Estimates

Description	Rate	Size	% Good	Cash Value
D/W/P: 3.5 Concrete	6.63	131	51	443
Wood Frame	27.36	140	51	1,953
Total Estimated Land Improvements True Cash Value =				2,396

Year	Land Value	Building Value	Assessed Value	Board of Review	Tribunal/ Other	Taxable Value
2024	12,300	69,200	81,500			61,519C
2023	10,500	56,900	67,400			58,590C
2022	7,400	48,400	55,800			55,800S
2021	8,500	49,100	57,600			42,053C

*** Information herein deemed reliable but not guaranteed***

Building Type

X	Single Family
	Mobile Home
	Town Home
	Duplex
	A-Frame
X	Wood Frame

Building Style: PLAIN

Yr Built	Remodeled
0	0

Condition: Good

Room List

	Basement
	1st Floor
	2nd Floor
	Bedrooms

(1) Exterior

X	Wood/Shingle
	Aluminum/Vinyl
	Brick
X	Insulation

(2) Windows

	Many		Large
X	Avg.	X	Avg.
	Few		Small

X	Wood Sash
	Metal Sash
	Vinyl Sash
	Double Hung
	Horiz. Slide
	Casement
	Double Glass
	Patio Doors
X	Storms & Screens

(3) Roof

X	Gable		Gambrel
	Hip		Mansard
	Flat		Shed

X	Asphalt Shingle

Chimney:

(3) Roof (cont.)

	Eavestrough
X	Insulation
0	Front Overhang
0	Other Overhang

(4) Interior

X	Drywall		Plaster
	Paneled		Wood T&G

Trim & Decoration

	Ex	X	Ord		Min

Size of Closets

	Lg	X	Ord		Small

Doors:		Solid	X	H.C.	

(5) Floors

Kitchen:
Other: Linoleum
Other: Carpeted

(6) Ceilings

X	Drywall

(7) Excavation

Basement: 0 S.F.
Crawl: 484 S.F.
Slab: 528 S.F.
Height to Joists: 0.0

(8) Basement

	Conc. Block
	Poured Conc.
	Stone
	Treated Wood
	Concrete Floor

(9) Basement Finish

	Recreation SF
	Living SF
	Walkout Doors (B)
	No Floor SF
	Walkout Doors (A)

(10) Floor Support

Joists:
Unsupported Len:
Cntr.Sup:

(11) Heating/Cooling

X	Gas		Oil		Elec.
	Wood		Coal		Steam

	Forced Air w/o Ducts
X	Forced Air w/ Ducts
	Forced Hot Water
	Electric Baseboard
	Elec. Ceil. Radiant
	Radiant (in-floor)
	Electric Wall Heat
	Space Heater
	Wall/Floor Furnace
	Forced Heat & Cool
	Heat Pump
	No Heating/Cooling

	Central Air
	Wood Furnace

(12) Electric

150	Amps Service

No./Qual. of Fixtures

	Ex.	X	Ord.		Min

No. of Elec. Outlets

	Many	X	Ave.		Few

(13) Plumbing

1	Average Fixture(s)
	3 Fixture Bath
	2 Fixture Bath
	Softener, Auto
	Softener, Manual
	Solar Water Heat
	No Plumbing
	Extra Toilet
	Extra Sink
	Separate Shower
	Ceramic Tile Floor
	Ceramic Tile Wains
	Ceramic Tub Alcove
	Vent Fan

(14) Water/Sewer

	Public Water
	Public Sewer
1	Water Well
1	1000 Gal Septic
	2000 Gal Septic

Lump Sum Items:

(15) Built-ins

	Appliance Allow.
	Cook Top
	Dishwasher
	Garbage Disposal
	Bath Heater
	Vent Fan
	Hot Tub
	Unvented Hood
	Vented Hood
	Intercom
	Jacuzzi Tub
	Jacuzzi repl.Tub
	Oven
	Microwave
	Standard Range
	Self Clean Range
	Sauna
	Trash Compactor
	Central Vacuum
	Security System

(15) Fireplaces

	Interior 1 Story
	Interior 2 Story
	2nd/Same Stack
	Two Sided
	Exterior 1 Story
	Exterior 2 Story
	Prefab 1 Story
	Prefab 2 Story
	Heat Circulator
	Raised Hearth
	Wood Stove
	Direct-Vented Gas

Class: C
Effec. Age: 49
Floor Area: 1,584
Total Base New : 205,597 E.C.F.
Total Depr Cost: 104,852 X 1.297
Estimated T.C.V: 135,993

(16) Porches/Decks

Area	Type
24	CCP (1 Story)
320	WPP

(17) Garage

Year Built:
Car Capacity:
Class:
Exterior:
Brick Ven.:
Stone Ven.:
Common Wall:
Foundation:
Finished ?:
Auto. Doors:
Mech. Doors:
Area:
% Good:
Storage Area:
No Conc. Floor:

Bsmnt Garage:

Carport Area:
Roof:

Cost Est. for Res. Bldg: 1 Single Family PLAIN Cls C Blt 0
(11) Heating System: Forced Air w/ Ducts
Ground Area = 1012 SF Floor Area = 1584 SF.
Phy/Ab.Phy/Func/Econ/Comb. % Good=51/100/100/100/51
Building Areas

Stories	Exterior	Foundation	Size	Cost New	Depr. Cost
2 Story	Siding	Slab	528		
1 Story	Siding	Crawl Space	484		
1 Story	Siding	Overhang	44		
			Total:	188,202	95,981
Other Additions/Adjustments					
Water/Sewer					
1000 Gal Septic			1	4,899	2,498
Water Well, 100 Feet			1	5,849	2,983
Porches					
WPP			320	5,430	2,769
CCP (1 Story)			24	1,217	621
			Totals:	205,597	104,852

Notes:
ECF (RESIDENTIAL) 1.297 => TCV: 135,993

*** Information herein deemed reliable but not guaranteed***

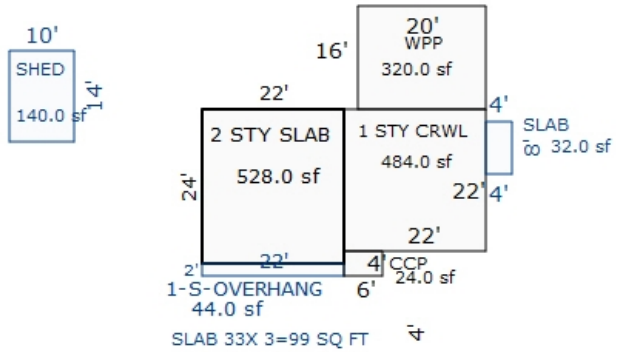

Sketch by Apex Sketch

*** Information herein deemed reliable but not guaranteed***

Parcel Number: 2410-35-1406 Jurisdiction: GREENWOOD TWP County: WEXFORD Printed on 02/15/2024

Grantor	Grantee	Sale Price	Sale Date	Inst. Type	Terms of Sale	Liber & Page	Verified By	Prcnt. Trans.
LASICH, JACK W.	SHERMAN ET AL, LOUANN M.	99,900	02/22/2000	WD	03-ARM'S LENGTH	372:459	DEED	0.0

Property Address	Class: RESIDENTIAL-IMPROV	Zoning:	Building Permit(s)	Date	Number	Status
4801 E 12 1/2 RD	School: MANTON CONSOLIDATED SCHOOLS		RESIDENTIAL - REMODEL	09/29/2005	PM8661	
	P.R.E. 100% / /					
Owner's Name/Address	:					
SHERMAN, LOUANN M & STEVE SPRINGBERG 4801 E 12 1/2 RD MANTON MI 49663	2024 Est TCV 182,838 TCV/TFA: 130.23					

Tax Description

W 1/2 OF SE 1/4 OF NE 1/4 EXC S 1040 FT OF E 208 FT. 14.72 A M/L GW. SEC. 35 T24N R10W -MANTON-

Comments/Influences

X	Improved		Vacant

	Public Improvements
	Dirt Road
X	Gravel Road
	Paved Road
	Storm Sewer
	Sidewalk
	Water
	Sewer
X	Electric
	Gas
	Curb
	Street Lights
	Standard Utilities
	Underground Utils.

	Topography of Site
	Level
X	Rolling
	Low
	High
	Landscaped
	Swamp
X	Wooded
	Pond
	Waterfront
	Ravine
	Wetland
	Flood Plain
X	OPEN/PINES

Who	When	What
GLA	05/11/2020	INSPECTION
GLA	07/10/2019	INSPECTION
GLA	07/10/2019	INSPECTION

Land Value Estimates for Land Table 4010.LAND VALUES

Description	Frontage	Depth	* Factors * Front	Depth	Rate	%Adj.	Reason	Value
ACREAGE			14.400 Acres		3,320	100		47,802
ROW			0.320 Acres		0	100		0
			14.72 Total Acres		Total Est. Land Value =			47,802

Land Improvement Cost Estimates

Description	Rate	Size	% Good	Cash Value
D/W/P: 3.5 Concrete	5.82	104	45	272
Wood Frame	19.95	192	42	1,609
Total Estimated Land Improvements True Cash Value =				1,881

Year	Land Value	Building Value	Assessed Value	Board of Review	Tribunal/ Other	Taxable Value
2024	23,900	67,500	91,400			53,314C
2023	18,700	54,600	73,300			50,776C
2022	16,600	45,600	62,200			48,359C
2021	17,300	46,500	63,800			46,815C

The Equalizer. Copyright (c) 1999 - 2009.
Licensed To: Township of Greenwood, County of Wexford, Michigan

*** Information herein deemed reliable but not guaranteed***

Building Type

X	Single Family
	Mobile Home
	Town Home
	Duplex
	A-Frame
X	Wood Frame

Building Style: PLAIN

Yr Built	Remodeled
0	0

Condition: Good

Room List

	Basement
	1st Floor
	2nd Floor
	Bedrooms

(1) Exterior

X	Wood/Shingle
	Aluminum/Vinyl
	Brick
X	Insulation

(2) Windows

	Many		Large
X	Avg.	X	Avg.
	Few		Small

X	Wood Sash
	Metal Sash
	Vinyl Sash
	Double Hung
	Horiz. Slide
	Casement
	Double Glass
	Patio Doors
X	Storms & Screens

(3) Roof

X	Gable		Gambrel
	Hip		Mansard
	Flat		Shed

X	Asphalt Shingle

Chimney:

(3) Roof (cont.)

	Eavestrough
X	Insulation
0	Front Overhang
0	Other Overhang

(4) Interior

X	Drywall		Plaster
	Paneled		Wood T&G

Trim & Decoration

	Ex	X	Ord		Min

Size of Closets

	Lg	X	Ord		Small

Doors:		Solid	X	H.C.	

(5) Floors

Kitchen:
Other: Linoleum
Other: Carpeted

(6) Ceilings

X	Drywall		

(7) Excavation

Basement: 312 S.F.
Crawl: 1092 S.F.
Slab: 0 S.F.
Height to Joists: 0.0

(8) Basement

	Conc. Block
	Poured Conc.
	Stone
	Treated Wood
	Concrete Floor

(9) Basement Finish

	Recreation SF
	Living SF
	Walkout Doors (B)
	No Floor SF
	Walkout Doors (A)

(10) Floor Support

Joists:
Unsupported Len:
Cntr.Sup:

(11) Heating/Cooling

X	Gas		Oil		Elec.
	Wood		Coal		Steam

	Forced Air w/o Ducts
X	Forced Air w/ Ducts
	Forced Hot Water
	Electric Baseboard
	Elec. Ceil. Radiant
	Radiant (in-floor)
	Electric Wall Heat
	Space Heater
	Wall/Floor Furnace
	Forced Heat & Cool
	Heat Pump
	No Heating/Cooling

	Central Air
	Wood Furnace

(12) Electric

150	Amps Service

No./Qual. of Fixtures

	Ex.	X	Ord.		Min

No. of Elec. Outlets

	Many	X	Ave.		Few

(13) Plumbing

1	Average Fixture(s)
	3 Fixture Bath
	2 Fixture Bath
	Softener, Auto
	Softener, Manual
	Solar Water Heat
	No Plumbing
	Extra Toilet
	Extra Sink
	Separate Shower
	Ceramic Tile Floor
	Ceramic Tile Wains
	Ceramic Tub Alcove
	Vent Fan

(14) Water/Sewer

	Public Water
	Public Sewer
1	Water Well
1	1000 Gal Septic
	2000 Gal Septic

Lump Sum Items:

(15) Built-ins

	Appliance Allow.
	Cook Top
	Dishwasher
	Garbage Disposal
	Bath Heater
	Vent Fan
	Hot Tub
	Unvented Hood
	Vented Hood
	Intercom
	Jacuzzi Tub
	Jacuzzi repl.Tub
	Oven
	Microwave
	Standard Range
	Self Clean Range
	Sauna
	Trash Compactor
	Central Vacuum
	Security System

(15) Fireplaces

	Interior 1 Story
	Interior 2 Story
	2nd/Same Stack
	Two Sided
	Exterior 1 Story
	Exterior 2 Story
	Prefab 1 Story
	Prefab 2 Story
	Heat Circulator
	Raised Hearth
	Wood Stove
	Direct-Vented Gas

Class: CD
Effec. Age: 57
Floor Area: 1,404
Total Base New : 240,309 E.C.F.
Total Depr Cost: 102,664 X 1.297
Estimated T.C.V: 133,155

(16) Porches/Decks

Area	Type
20	CPP
70	WGEP (1 Story)
156	Treated Wood
168	Roof Cover Onl

(17) Garage

Year Built:
Car Capacity:
Class: CD
Exterior: Pole
Brick Ven.: 0
Stone Ven.: 0
Common Wall: Detache
Foundation: 18 Inch
Finished ?:
Auto. Doors: 0
Mech. Doors: 0
Area: 1032
% Good: 11
Storage Area: 0
No Conc. Floor: 1032

Bsmnt Garage:

Carport Area:
Roof:

Cost Est. for Res. Bldg: 1 Single Family PLAIN Cls CD Blt 0
(11) Heating System: Forced Air w/ Ducts
Ground Area = 1404 SF Floor Area = 1404 SF.
Phy/Ab.Phy/Func/Econ/Comb. % Good=45/100/100/100/45

Building Areas

Stories	Exterior	Foundation	Size	Cost New	Depr. Cost
1 Story	Siding	Basement	312		
1 Story	Siding	Crawl Space	1,092		
			Total:	168,292	75,730

Other Additions/Adjustments

Water/Sewer			
1000 Gal Septic	1	4,582	2,062
Water Well, 100 Feet	1	5,680	2,556
Porches			
WGEP (1 Story)	70	7,006	3,153
CPP	20	531	239
Deck			
Treated Wood w/Roof (Deck Portion)	156	3,465	1,559
Treated Wood w/Roof (Roof portion)	156	2,498	1,124
w/Roof (Roof portion)	168	2,663	1,198
Garages			
Class: CD Exterior: Pole (Unfinished)			
Base Cost	1032	22,446	2,469 *1
No Concrete Floor	1032	-6,347	-698
Class: CD Exterior: Pole (Unfinished)			
Base Cost	1356	29,493	13,272
	Totals:	240,309	102,664

Notes:

ECF (RESIDENTIAL) 1.297 => TCV: 133,155

*** Information herein deemed reliable but not guaranteed***

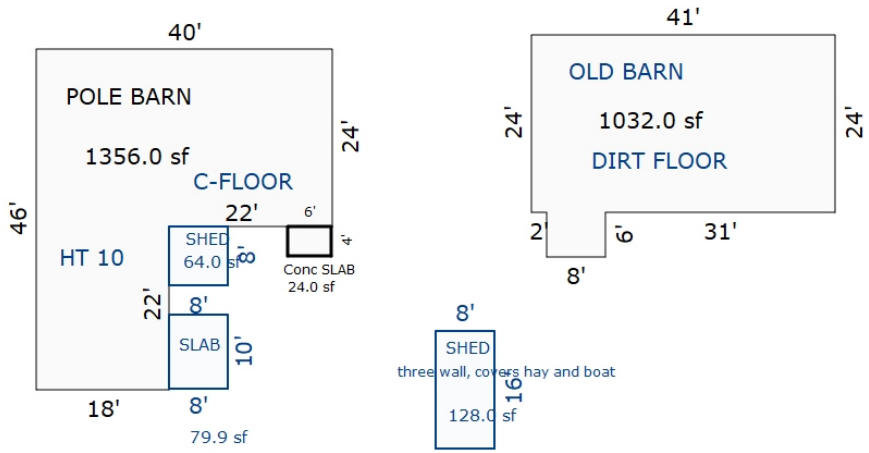

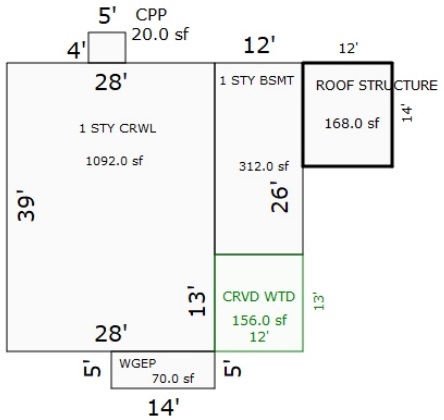

Sketch by Apex Sketch

*** Information herein deemed reliable but not guaranteed***

Parcel Number: 2410-35-1407 Jurisdiction: GREENWOOD TWP County: WEXFORD Printed on 02/15/2024

Grantor	Grantee	Sale Price	Sale Date	Inst. Type	Terms of Sale	Liber & Page	Verified By	Prcnt. Trans.
RICHARDSON, DYLAN J & KATE	DOSS GLEN & CHELSEY	220,000	06/28/2023	WD	03-ARM'S LENGTH	PTA	PROPERTY TRANSFER	100.0
FARRELL, KRISTINA	RICHARDSON, DYLAN J & KATE	62,500	02/05/2019	WD	03-ARM'S LENGTH	684 /812	DEED	0.0
HUD	FARRELL, KRISTINA & JOSHUA	18,750	09/01/2006	WD	21-NOT USED/OTHER	591:2924	DEED	0.0
BROWN, TERRY & VALERIE	WASHINGTON MUTUAL BANK	31,757	08/05/2005	SD	21-NOT USED/OTHER	576:362	DEED	0.0

Property Address

6531 N 35 RD

Owner's Name/Address

DOSS GLEN & CHELSEY
6531 N 35 RD
MANTON MI 49663

Tax Description

PAR COM 132 FT N OF E 1/4 COR: W 220 FT; N 235.9 FT; E 220 FT; S 235.73 FT TO POB. --1.2 A. M/L-- GW. SEC. 35 T24N R10W -MANTON-

Comments/Influences

The Equalizer. Copyright (c) 1999 - 2009. Licensed To: Township of Greenwood, County of Wexford, Michigan

Class: RESIDENTIAL-IMPROV Zoning:

School: MANTON CONSOLIDATED SCHOOLS

P.R.E. 100% 09/05/2023

:

2024 Est TCV 177,421 TCV/TFA: 134.82

Building Permit(s)	Date	Number	Status
Foundation	10/12/2015	PB15-0226	COMPLETE
Res. Add/Alter/Repair	09/14/2015	PB15-0207	COMPLETE

X	Improved	
	Vacant	

Public Improvements

	Dirt Road
X	Gravel Road
	Paved Road
	Storm Sewer
	Sidewalk
	Water
	Sewer
X	Electric
	Gas
	Curb
	Street Lights
	Standard Utilities
	Underground Utils.

Topography of Site

X	Level
	Rolling
	Low
	High
	Landscaped
	Swamp
X	Wooded
	Pond
	Waterfront
	Ravine
	Wetland
	Flood Plain
X	OPEN

Who	When	What
GLA	05/11/2020	INSPECTION
GLA	07/10/2019	INSPECTION
GLA	07/10/2019	INSPECTION

Land Value Estimates for Land Table 4010.LAND VALUES

Description	Frontage	Depth	* Factors * Front	Depth	Rate	%Adj.	Reason	Value
ACREAGE			1.021 Acres		10,953	100		11,183
ROW			0.179 Acres		0	100		0
			1.20 Total Acres		Total Est. Land Value =			11,183

Land Improvement Cost Estimates

Description	Rate	Size	% Good	Cash Value
Wood Frame	22.73	400	42	3,819
Total Estimated Land Improvements True Cash Value =				3,819

Year	Land Value	Building Value	Assessed Value	Board of Review	Tribunal/ Other	Taxable Value
2024	5,600	83,100	88,700			88,700S
2023	3,100	44,500	47,600			29,919C
2022	2,600	37,800	40,400			28,495C
2021	3,100	38,400	41,500			27,585C

*** Information herein deemed reliable but not guaranteed***

Building Type

X	Single Family
	Mobile Home
	Town Home
	Duplex
	A-Frame
X	Wood Frame

Building Style: FARMHOUSE

Yr Built	Remodeled
1910	2018

Condition: Good

Room List

	Basement
	1st Floor
	2nd Floor
	Bedrooms

(1) Exterior

X	Wood/Shingle
	Aluminum/Vinyl
	Brick
X	Insulation

(2) Windows

	Many		Large
X	Avg.	X	Avg.
	Few		Small

X	Wood Sash
	Metal Sash
	Vinyl Sash
	Double Hung
	Horiz. Slide
	Casement
	Double Glass
	Patio Doors
X	Storms & Screens

(3) Roof

X	Gable		Gambrel
	Hip		Mansard
	Flat		Shed

X	Asphalt Shingle

Chimney:

(3) Roof (cont.)

	Eavestrough
X	Insulation
0	Front Overhang
0	Other Overhang

(4) Interior

X	Drywall		Plaster
	Paneled		Wood T&G

Trim & Decoration

	Ex	X	Ord		Min

Size of Closets

	Lg	X	Ord		Small

Doors:		Solid	X	H.C.	

(5) Floors

Kitchen:
Other: Linoleum
Other: Carpeted

(6) Ceilings

X	Drywall

(7) Excavation

Basement: 162 S.F.
Crawl: 924 S.F.
Slab: 0 S.F.
Height to Joists: 0.0

(8) Basement

	Conc. Block
	Poured Conc.
	Stone
	Treated Wood
	Concrete Floor

(9) Basement Finish

	Recreation SF
	Living SF
	Walkout Doors (B)
	No Floor SF
	Walkout Doors (A)

(10) Floor Support

Joists:
Unsupported Len:
Cntr.Sup:

(11) Heating/Cooling

X	Gas		Oil		Elec.
	Wood		Coal		Steam

	Forced Air w/o Ducts
X	Forced Air w/ Ducts
	Forced Hot Water
	Electric Baseboard
	Elec. Ceil. Radiant
	Radiant (in-floor)
	Electric Wall Heat
	Space Heater
	Wall/Floor Furnace
	Forced Heat & Cool
	Heat Pump
	No Heating/Cooling

	Central Air
	Wood Furnace

(12) Electric

150	Amps Service

No./Qual. of Fixtures

	Ex.	X	Ord.		Min

No. of Elec. Outlets

	Many	X	Ave.		Few

(13) Plumbing

1	Average Fixture(s)
	3 Fixture Bath
	2 Fixture Bath
	Softener, Auto
	Softener, Manual
	Solar Water Heat
	No Plumbing
	Extra Toilet
	Extra Sink
	Separate Shower
	Ceramic Tile Floor
	Ceramic Tile Wains
	Ceramic Tub Alcove
	Vent Fan

(14) Water/Sewer

	Public Water
	Public Sewer
1	Water Well
1	1000 Gal Septic
	2000 Gal Septic

Lump Sum Items:

(15) Built-ins

	Appliance Allow.
	Cook Top
	Dishwasher
	Garbage Disposal
	Bath Heater
	Vent Fan
	Hot Tub
	Unvented Hood
	Vented Hood
	Intercom
	Jacuzzi Tub
	Jacuzzi repl.Tub
	Oven
	Microwave
	Standard Range
	Self Clean Range
	Sauna
	Trash Compactor
	Central Vacuum
	Security System

(15) Fireplaces

	Interior 1 Story
	Interior 2 Story
	2nd/Same Stack
	Two Sided
	Exterior 1 Story
	Exterior 2 Story
	Prefab 1 Story
	Prefab 2 Story
	Heat Circulator
	Raised Hearth
	Wood Stove
	Direct-Vented Gas

Class: C
Effec. Age: 35
Floor Area: 1,316
Total Base New : 192,659 E.C.F.
Total Depr Cost: 125,227 X 1.297
Estimated T.C.V: 162,419

(16) Porches/Decks

Area	Type
144	WGEP (1 Story)

(17) Garage

Year Built:
Car Capacity:
Class:
Exterior:
Brick Ven.:
Stone Ven.:
Common Wall:
Foundation:
Finished ?:
Auto. Doors:
Mech. Doors:
Area:
% Good:
Storage Area:
No Conc. Floor:

Bsmnt Garage:

Carport Area:
Roof:

Cost Est. for Res. Bldg: 1 Single Family FARMHOUSE Cls C Blt 1910
(11) Heating System: Forced Air w/ Ducts
Ground Area = 1086 SF Floor Area = 1316 SF.
Phy/Ab.Phy/Func/Econ/Comb. % Good=65/100/100/100/65
Building Areas

Stories	Exterior	Foundation	Size	Cost New	Depr. Cost
1 Story	Siding	Basement	162		
1.5 Story	Siding	Crawl Space	348		
1.25 Story	Siding	Crawl Space	224		
1 Story	Siding	Crawl Space	352		
			Total:	169,615	110,249

Other Additions/Adjustments

Water/Sewer			
1000 Gal Septic	1	4,899	3,184
Water Well, 100 Feet	1	5,849	3,802
Porches			
WGEP (1 Story)	144	12,296	7,992
Totals:		192,659	125,227

Notes:

ECF (RESIDENTIAL) 1.297 => TCV: 162,419

*** Information herein deemed reliable but not guaranteed***

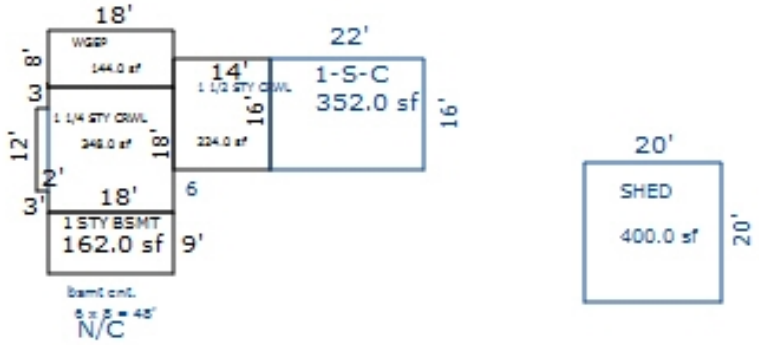

Sketch by Apex Sketch

*** Information herein deemed reliable but not guaranteed***

Parcel Number: 2410-35-1408 Jurisdiction: GREENWOOD TWP County: WEXFORD Printed on 02/15/2024

Grantor	Grantee	Sale Price	Sale Date	Inst. Type	Terms of Sale	Liber & Page	Verified By	Prcnt. Trans.
BEAL BANK SSB	DARNELL, DANIEL W	58,700	07/16/2008	WD	21-NOT USED/OTHER	613/314	DEED	100.0
CARSTEN JAMES H. & GERI SU	BEAL BANK SSB	71,497	02/16/2007	SD	21-NOT USED/OTHER	597/1867	DEED	0.0
CARRIER, ADELBERT W.	CARSTEN, JAMES H.	26,747	09/01/1992	LC	03-ARM'S LENGTH	331:218	DEED	0.0

Property Address

Owner's Name/Address

DARNELL, DANIEL W
6953 N 35 RD
MANTON MI 49663

Tax Description

PAR "E" DESC AS COM AT E 1/4 COR: N 367.73 FT TO POB: TH W 220 FT; S 235.90 FT; W 426.37 FT; N 1196.73 FT TO N 1/8 LINE; TH E 429.42 FT; S 164.50 FT; W 239.94 FT; S26D45M28S W 333 FT;E 216.16 FT; N 90.52 FT; E 121.34 FT; S 515 FT; E 266.65 FT; S 66 FT TO POB. 9.66 A M/L- TOG W/ EASMT GW. SEC. 35 T24N R10W -MANTON- SPLIT ON 2-11-08 WITH 2410-35-1401

Comments/Influences

The Equalizer. Copyright (c) 1999 - 2009. Licensed To: Township of Greenwood, County of Wexford, Michigan

Class: RESIDENTIAL-VACANT Zoning:

School: MANTON CONSOLIDATED SCHOOLS

P.R.E. 100% 01/09/2023

:

2024 Est TCV 44,976

Building Permit(s)	Date	Number	Status
Foundation	05/06/2008	PB08-0072	
RESIDENTIAL - REMODEL	06/26/2007	PB13579	
MOBILE HOME	03/30/2000	PM4057	
MOBILE HOME	03/30/2000	PP1714	

	Improved	X	Vacant

	Public Improvements
	Dirt Road
X	Gravel Road
	Paved Road
	Storm Sewer
	Sidewalk
	Water
	Sewer
X	Electric
	Gas
	Curb
	Street Lights
	Standard Utilities
	Underground Utils.

	Topography of Site
X	Level
X	Rolling
	Low
	High
	Landscaped
	Swamp
X	Wooded
	Pond
	Waterfront
	Ravine
	Wetland
	Flood Plain
X	OPEN/PINES

Who	When	What
GLA	05/11/2020	INSPECTION
GLA	07/10/2019	INSPECTION
GLA	07/10/2019	INSPECTION

Land Value Estimates for Land Table 4010.LAND VALUES

Description	Frontage	Depth	* Factors * Front	Depth	Rate	%Adj.	Reason	Value
ACREAGE			9.610 Acres		4,680	100		44,976
ROW			0.050 Acres		0	100		0
			9.66 Total Acres		Total Est. Land Value =			44,976

Year	Land Value	Building Value	Assessed Value	Board of Review	Tribunal/ Other	Taxable Value
2024	22,500	0	22,500			11,211C
2023	12,900	0	12,900			10,678C
2022	11,800	0	11,800		11,800R	10,170C
2021	12,000	0	12,000		12,000R	9,846C

*** Information herein deemed reliable but not guaranteed***

Parcel Number: 2410-35-1409 Jurisdiction: GREENWOOD TWP County: WEXFORD Printed on 02/15/2024

Grantor	Grantee	Sale Price	Sale Date	Inst. Type	Terms of Sale	Liber & Page	Verified By	Prcnt. Trans.
GARDNER, CATHY		9,500	03/27/2017	WD	21-NOT USED/OTHER	679 / 2217	DEED	0.0
ARNOLD, JASON	GARDNER, CATHY	9,500	08/08/2015	LC	03-ARM'S LENGTH	6782/667	DEED	100.0
BORTON, ROBERT D & VELLA L	ARNOLD, JASON	3,700	09/16/2013	LC	03-ARM'S LENGTH	663/312	DEED	100.0
BORTON, ROBERT & VELLA	ROBERTS, KIRK & STEPHANIE	20,000	03/21/2002	LC	03-ARM'S LENGTH	386:901	DEED	0.0

Property Address

6593 N 35 RD

Owner's Name/Address

ARNOLD, CATHY (FKA GARDNER)
6593 N 35 RD
MANTON MI 49663

Tax Description

S 1/2 OF PARCEL "C" PER REG SURVEY REC L67, PG 356, DESC AS: COM 453.73 FT N OF E 1/4 COR: TH W 266.65 FT; N 350 FT; E 266.65 FT; S 350 FT TO POB: EXC COM 618.73 FT N OF E 1/4 COR: TH W 266.65 FT; N 165 FT; E 266.65 FT; S 165 FT TO POB. --1.13 A. M/L--

Comments/Influences

The Equalizer. Copyright (c) 1999 - 2009.
Licensed To: Township of Greenwood, County of Wexford, Michigan

Class: RESIDENTIAL-IMPROV Zoning:

School: MANTON CONSOLIDATED SCHOOLS

P.R.E. 100% 05/02/2017

:

2024 Est TCV 29,518 TCV/TFA: 43.93

Building Permit(s)	Date	Number	Status

X Improved | Vacant

	Public Improvements
	Dirt Road
X	Gravel Road
	Paved Road
	Storm Sewer
	Sidewalk
	Water
	Sewer
X	Electric
	Gas
	Curb
	Street Lights
	Standard Utilities
	Underground Utils.

	Topography of Site
X	Level
X	Rolling
	Low
	High
	Landscaped
	Swamp
X	Wooded
	Pond
	Waterfront
	Ravine
	Wetland
	Flood Plain
X	OPEN

Who	When	What
GLA	05/11/2020	INSPECTION
GLA	07/10/2019	INSPECTION
GLA	07/10/2019	INSPECTION

Land Value Estimates for Land Table 4010.LAND VALUES

Description	Frontage	Depth	* Factors * Front	Depth	Rate	%Adj.	Reason	Value
ACREAGE			0.865 Acres		10,953	100		9,474
ROW			0.265 Acres		0	100		0
			1.13 Total Acres		Total Est. Land Value =			9,474

Land Improvement Cost Estimates

Description	Rate	Size	% Good	Cash Value
Wood Frame	24.68	88	41	891
Total Estimated Land Improvements True Cash Value =				891

Year	Land Value	Building Value	Assessed Value	Board of Review	Tribunal/ Other	Taxable Value
2024	4,700	10,100	14,800			8,235C
2023	2,600	8,100	10,700			7,843C
2022	2,200	6,800	9,000			7,470C
2021	2,600	5,900	8,500			7,232C

*** Information herein deemed reliable but not guaranteed***

Building Type

	Single Family
X	Mobile Home
	Town Home
	Duplex
	A-Frame

X	Wood Frame

Building Style: SWT/DWT

Yr Built	Remodeled
0	0

Condition: Poor

Room List

	Basement
	1st Floor
	2nd Floor
	Bedrooms

(1) Exterior

	Wood/Shingle
X	Aluminum/Vinyl
	Brick
X	Insulation

(2) Windows

	Many		Large
X	Avg.	X	Avg.
	Few		Small

	Wood Sash
	Metal Sash
X	Vinyl Sash
	Double Hung
	Horiz. Slide
	Casement
	Double Glass
	Patio Doors
X	Storms & Screens

(3) Roof

X	Gable		Gambrel
	Hip		Mansard
	Flat		Shed

X	Asphalt Shingle

Chimney:

(3) Roof (cont.)

	Eavestrough
X	Insulation
0	Front Overhang
0	Other Overhang

(4) Interior

X	Drywall		Plaster
	Paneled		Wood T&G

Trim & Decoration

	Ex	X	Ord		Min

Size of Closets

	Lg	X	Ord		Small

Doors:		Solid	X	H.C.	

(5) Floors

Kitchen:
Other: Linoleum
Other: Carpeted

(6) Ceilings

X	Drywall		

(7) Excavation

Basement: 0 S.F.
Crawl: 0 S.F.
Slab: 0 S.F.
Height to Joists: 0.0

(8) Basement

	Conc. Block
	Poured Conc.
	Stone
	Treated Wood
	Concrete Floor

(9) Basement Finish

	Recreation SF
	Living SF
	Walkout Doors (B)
	No Floor SF
	Walkout Doors (A)

(10) Floor Support

Joists:
Unsupported Len:
Cntr.Sup:

(11) Heating/Cooling

X	Gas		Oil		Elec.
	Wood		Coal		Steam

X	Forced Warm Air
	Wall Furnace
	Warm & Cool Air
	Heat Pump

	Central Air
	Wood Furnace

(12) Electric

150	Amps Service

No./Qual. of Fixtures

	Ex.	X	Ord.		Min

No. of Elec. Outlets

	Many	X	Ave.		Few

(13) Plumbing

	Average Fixture(s)
1	3 Fixture Bath
	2 Fixture Bath
	Softener, Auto
	Softener, Manual
	Solar Water Heat
	No Plumbing
	Extra Toilet
	Extra Sink
	Separate Shower
	Ceramic Tile Floor
	Ceramic Tile Wains
	Ceramic Tub Alcove
	Vent Fan

(14) Water/Sewer

	Public Water
	Public Sewer
1	Water Well
1	1000 Gal Septic
	2000 Gal Septic

Lump Sum Items:

(15) Built-ins

	Appliance Allow.
	Cook Top
	Dishwasher
	Garbage Disposal
	Bath Heater
	Vent Fan
	Hot Tub
	Unvented Hood
	Vented Hood
	Intercom
	Jacuzzi Tub
	Jacuzzi repl.Tub
	Oven
	Microwave
	Standard Range
	Self Clean Range
	Sauna
	Trash Compactor
	Central Vacuum
	Security System

(15) Fireplaces

	Interior 1 Story
	Interior 2 Story
	2nd/Same Stack
	Two Sided
	Exterior 1 Story
	Exterior 2 Story
	Prefab 1 Story
	Prefab 2 Story
	Heat Circulator
	Raised Hearth
	Wood Stove
	Direct-Vented Gas

Class: Low
Effec. Age: 25
Floor Area:
Total Base New : 52,741 E.C.F.
Total Depr Cost: 14,767 X 1.297
Estimated T.C.V: 19,153

(16) Porches/Decks

Area	Type
96	WCP (1 Story)
16	Treated Wood

(17) Garage

Year Built:
Car Capacity:
Class:
Exterior:
Brick Ven.:
Stone Ven.:
Common Wall:
Foundation:
Finished ?:
Auto. Doors:
Mech. Doors:
Area:
% Good:
Storage Area:
No Conc. Floor:

Bsmnt Garage:

Carport Area:
Roof:

Cost Est. for Res. Bldg: 1 Mobile Home SWT/DWT Cls Low Blt 0
(11) Heating System: Forced Warm Air
Ground Area = 672 SF Floor Area = 672 SF.
Phy/Ab.Phy/Func/Econ/Comb. % Good=35/100/80/100/28
Functional Depreciation because of: OLD 12 WIDE TRL
Building Areas

Type	Ext. Walls	Roof/Fnd.	Size	Cost New	Depr. Cost
Main Home	Ribbed	Metal	672		
			Total:	36,931	10,340
Other Additions/Adjustments					
Skirting, Metal or Vinyl, Vertical			136	1,477	414
Water/Sewer					
1000 Gal Septic			1	4,293	1,202
Water Well, 100 Feet			1	5,545	1,553
Porches					
WCP (1 Story)			96	3,480	974
Deck					
Treated Wood w/Roof (Deck Portion)			16	707	198
Treated Wood w/Roof (Roof portion)			16	308	86
			Totals:	52,741	14,767

Notes:
ECF (RESIDENTIAL) 1.297 => TCV: 19,153

*** Information herein deemed reliable but not guaranteed***

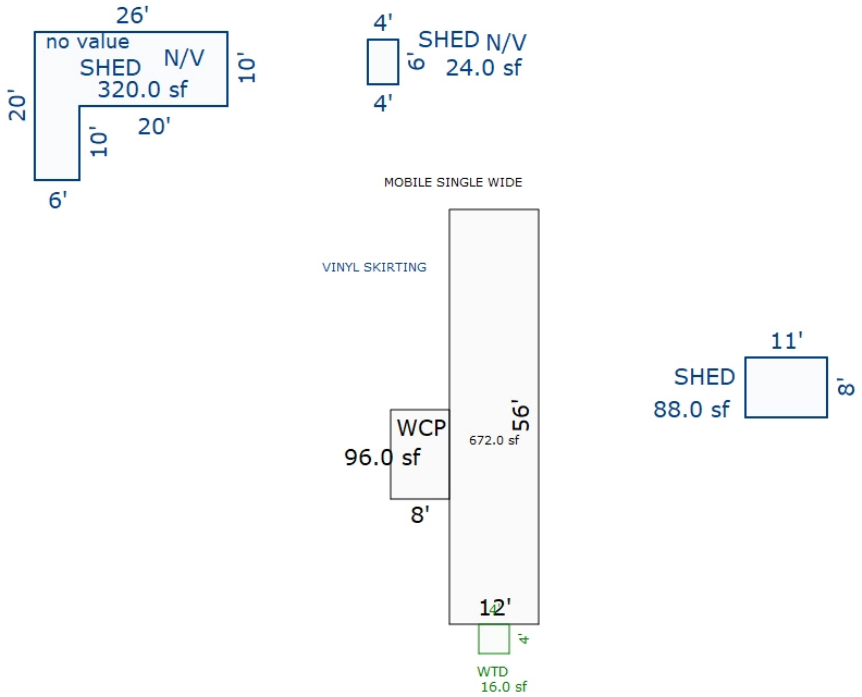

Sketch by Apex Sketch

*** Information herein deemed reliable but not guaranteed***

Parcel Number: 2410-35-1410 Jurisdiction: GREENWOOD TWP County: WEXFORD Printed on 02/15/2024

Grantor	Grantee	Sale Price	Sale Date	Inst. Type	Terms of Sale	Liber & Page	Verified By	Prcnt. Trans.
ROLLO, JAMES	CRANE, STUART & LISA	59,900	10/21/2020	WD	03-ARM'S LENGTH	688/1069	AGENT	100.0
CRANE, STUART & LISA		50,000	09/25/2020	WD	16-LC PAYOFF	688/1068	AGENT	0.0
FIRST NATIONAL BANK OF AME	ROLLO, JAMES	0	04/21/2015	MLC	21-NOT USED/OTHER	675/287	DEED	100.0
ROSE ACCEPTANCE INC	FIRST NATIONAL BANK OF AME	0	04/01/2015	QC	17-LENDING TO LENDING	675/286	DEED	0.0

Property Address

6661 N 35 RD

Owner's Name/Address

CRANE, STUART & LISA
6661 N 35 RD
MANTON MI 49663

Tax Description

PAR "B"COM AT E 1/4 COR OF SEC; N 783.73 FT TO POB: W 266.65 FT; N 165 FT; E 266.65 FT; S 165 FT TO POB. -1.01 A M/L- SUB TO EASMT L371 P573 GW SEC 35 T24N R10W -MANTON- [[ASSESSED W/ 35-1408 '99

Comments/Influences

The Equalizer. Copyright (c) 1999 - 2009. Licensed To: Township of Greenwood, County of Wexford, Michigan

Class: RESIDENTIAL-IMPROV Zoning:

School: MANTON CONSOLIDATED SCHOOLS

P.R.E. 100% 10/22/2020

:

2024 Est TCV 152,200 TCV/TFA: 109.34

Building Permit(s)	Date	Number	Status
Res. Add/Alter/Repair	10/14/2008	PP08-4765	
Res. Add/Alter/Repair	07/08/2008	PB08-0149	
Res. Add/Alter/Repair	07/08/2008	PE08-18279	
Res. Add/Alter/Repair	07/08/2008	PM08-10172	

X	Improved		Vacant

	Public Improvements
	Dirt Road
X	Gravel Road
	Paved Road
	Storm Sewer
	Sidewalk
	Water
	Sewer
X	Electric
	Gas
	Curb
	Street Lights
	Standard Utilities
	Underground Utils.

	Topography of Site
X	Level
X	Rolling
	Low
	High
	Landscaped
	Swamp
X	Wooded
	Pond
	Waterfront
	Ravine
	Wetland
	Flood Plain
X	OPEN/PINES

Who	When	What
GLA	05/11/2020	INSPECTION
GLA	07/10/2019	INSPECTION
GLA	07/10/2019	INSPECTION

Land Value Estimates for Land Table 4010.LAND VALUES

Description	Frontage	Depth	* Factors * Front	Depth	Rate	%Adj.	Reason	Value
ACREAGE			0.885 Acres		10,953	100		9,693
ROW			0.125 Acres		0	100		0
			1.01 Total Acres		Total Est. Land Value =			9,693

Year	Land Value	Building Value	Assessed Value	Board of Review	Tribunal/ Other	Taxable Value
2024	4,800	71,300	76,100			56,337C
2023	2,700	58,000	60,700			53,655C
2022	2,200	48,900	51,100			51,100S
2021	2,700	48,000	50,700			50,700S

*** Information herein deemed reliable but not guaranteed***

Building Type

X	Single Family
	Mobile Home
	Town Home
	Duplex
	A-Frame
X	Wood Frame

Building Style: PLAIN

Yr Built	Remodeled
2006	0

Condition: Good

Room List

	Basement
	1st Floor
	2nd Floor
	Bedrooms

(1) Exterior

X	Wood/Shingle
	Aluminum/Vinyl
	Brick
X	Insulation

(2) Windows

X	Many Avg. Few	X	Large Avg. Small

	Wood Sash
	Metal Sash
X	Vinyl Sash
	Double Hung
	Horiz. Slide
	Casement
	Double Glass
	Patio Doors
X	Storms & Screens

(3) Roof

X	Gable		Gambrel
	Hip		Mansard
	Flat		Shed

X	Asphalt Shingle

Chimney:

(3) Roof (cont.)

	Eavestrough
X	Insulation
0	Front Overhang
0	Other Overhang

(4) Interior

X	Drywall		Plaster
	Paneled		Wood T&G

Trim & Decoration

	Ex	X	Ord		Min

Size of Closets

	Lg	X	Ord		Small

Doors:		Solid	X	H.C.	

(5) Floors

Kitchen:
Other: Linoleum
Other: Carpeted

(6) Ceilings

X	Drywall

(7) Excavation

Basement: 0 S.F.
Crawl: 720 S.F.
Slab: 0 S.F.
Height to Joists: 0.0

(8) Basement

	Conc. Block
	Poured Conc.
	Stone
	Treated Wood
	Concrete Floor

(9) Basement Finish

	Recreation SF
	Living SF
	Walkout Doors (B)
	No Floor SF
	Walkout Doors (A)

(10) Floor Support

Joists:
Unsupported Len:
Cntr.Sup:

(11) Heating/Cooling

X	Gas		Oil		Elec.
	Wood		Coal		Steam

	Forced Air w/o Ducts
X	Forced Air w/ Ducts
	Forced Hot Water
	Electric Baseboard
	Elec. Ceil. Radiant
	Radiant (in-floor)
	Electric Wall Heat
	Space Heater
	Wall/Floor Furnace
	Forced Heat & Cool
	Heat Pump
	No Heating/Cooling

	Central Air
	Wood Furnace

(12) Electric

150	Amps Service

No./Qual. of Fixtures

	Ex.	X	Ord.		Min

No. of Elec. Outlets

	Many	X	Ave.		Few

(13) Plumbing

2	Average Fixture(s)
	3 Fixture Bath
	2 Fixture Bath
	Softener, Auto
	Softener, Manual
	Solar Water Heat
	No Plumbing
	Extra Toilet
	Extra Sink
	Separate Shower
	Ceramic Tile Floor
	Ceramic Tile Wains
	Ceramic Tub Alcove
	Vent Fan

(14) Water/Sewer

	Public Water
	Public Sewer
1	Water Well
1	1000 Gal Septic
	2000 Gal Septic

Lump Sum Items:

(15) Built-ins

	Appliance Allow.
	Cook Top
	Dishwasher
	Garbage Disposal
	Bath Heater
	Vent Fan
	Hot Tub
	Unvented Hood
	Vented Hood
	Intercom
	Jacuzzi Tub
	Jacuzzi repl.Tub
	Oven
	Microwave
	Standard Range
	Self Clean Range
	Sauna
	Trash Compactor
	Central Vacuum
	Security System

(15) Fireplaces

	Interior 1 Story
	Interior 2 Story
	2nd/Same Stack
	Two Sided
	Exterior 1 Story
	Exterior 2 Story
	Prefab 1 Story
	Prefab 2 Story
	Heat Circulator
	Raised Hearth
	Wood Stove
	Direct-Vented Gas

Class: CD
Effec. Age: 18
Floor Area: 720
Total Base New : 108,213 E.C.F.
Total Depr Cost: 88,733 X 1.297
Estimated T.C.V: 115,087

(16) Porches/Decks

Area	Type
24	4in Concrete
248	Treated Wood

(17) Garage

Year Built:
Car Capacity:
Class:
Exterior:
Brick Ven.:
Stone Ven.:
Common Wall:
Foundation:
Finished ?:
Auto. Doors:
Mech. Doors:
Area:
% Good:
Storage Area:
No Conc. Floor:

Bsmnt Garage:

Carport Area:
Roof:

Cost Est. for Res. Bldg: 1 Single Family PLAIN Cls CD Blt 2006
(11) Heating System: Forced Air w/ Ducts
Ground Area = 720 SF Floor Area = 720 SF.
Phy/Ab.Phy/Func/Econ/Comb. % Good=82/100/100/100/82
Building Areas

Stories	Exterior	Foundation	Size	Cost New	Depr. Cost
1 Story	Siding	Crawl Space	720		
			Total:	89,194	73,138
Other Additions/Adjustments					
Plumbing					
3 Fixture Bath			1	3,887	3,187
Water/Sewer					
1000 Gal Septic			1	4,582	3,757
Water Well, 100 Feet			1	5,680	4,658
Deck					
Treated Wood			248	4,692	3,847
Porches					
4in Concrete			24	178	146
			Totals:	108,213	88,733

Notes:
ECF (RESIDENTIAL) 1.297 => TCV: 115,087

*** Information herein deemed reliable but not guaranteed***

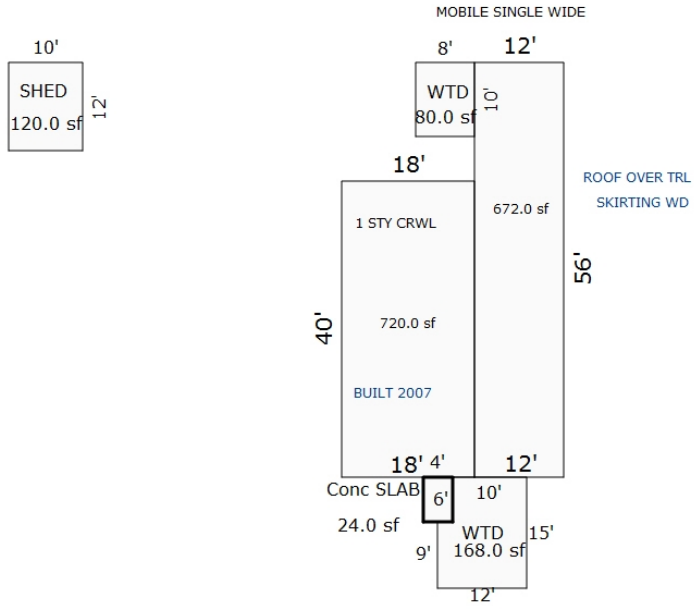

Sketch by Apex Sketch

*** Information herein deemed reliable but not guaranteed***

Building Type

	Single Family
X	Mobile Home
	Town Home
	Duplex
	A-Frame

X	Wood Frame

Building Style: PLAIN

Yr Built	Remodeled
0	0

Condition: Good

Room List

	Basement
	1st Floor
	2nd Floor
	Bedrooms

(1) Exterior

	Wood/Shingle
X	Aluminum/Vinyl
	Brick
X	Insulation

(2) Windows

	Many		Large
X	Avg.	X	Avg.
	Few		Small

	Wood Sash
	Metal Sash
X	Vinyl Sash
	Double Hung
	Horiz. Slide
	Casement
	Double Glass
	Patio Doors
X	Storms & Screens

(3) Roof

X	Gable		Gambrel
	Hip		Mansard
	Flat		Shed

X	Asphalt Shingle

Chimney:

(3) Roof (cont.)

	Eavestrough
X	Insulation
0	Front Overhang
0	Other Overhang

(4) Interior

X	Drywall		Plaster
	Paneled		Wood T&G

Trim & Decoration

	Ex	X	Ord		Min

Size of Closets

	Lg	X	Ord		Small

Doors:		Solid	X	H.C.	

(5) Floors

Kitchen:
Other: Linoleum
Other: Carpeted

(6) Ceilings

X	Drywall		

(7) Excavation

Basement: 0 S.F.
Crawl: 0 S.F.
Slab: 0 S.F.
Height to Joists: 0.0

(8) Basement

	Conc. Block
	Poured Conc.
	Stone
	Treated Wood
	Concrete Floor

(9) Basement Finish

	Recreation SF
	Living SF
	Walkout Doors (B)
	No Floor SF
	Walkout Doors (A)

(10) Floor Support

Joists:
Unsupported Len:
Cntr.Sup:

(11) Heating/Cooling

X	Gas		Oil		Elec.
	Wood		Coal		Steam

X	Forced Warm Air
	Wall Furnace
	Warm & Cool Air
	Heat Pump

	Central Air
	Wood Furnace

(12) Electric

150	Amps Service

No./Qual. of Fixtures

	Ex.	X	Ord.		Min

No. of Elec. Outlets

	Many	X	Ave.		Few

(13) Plumbing

	Average Fixture(s)
1	3 Fixture Bath
	2 Fixture Bath
	Softener, Auto
	Softener, Manual
	Solar Water Heat
	No Plumbing
	Extra Toilet
	Extra Sink
	Separate Shower
	Ceramic Tile Floor
	Ceramic Tile Wains
	Ceramic Tub Alcove
	Vent Fan

(14) Water/Sewer

	Public Water
	Public Sewer
	Water Well
	1000 Gal Septic
	2000 Gal Septic

Lump Sum Items:

(15) Built-ins

	Appliance Allow.
	Cook Top
	Dishwasher
	Garbage Disposal
	Bath Heater
	Vent Fan
	Hot Tub
	Unvented Hood
	Vented Hood
	Intercom
	Jacuzzi Tub
	Jacuzzi repl.Tub
	Oven
	Microwave
	Standard Range
	Self Clean Range
	Sauna
	Trash Compactor
	Central Vacuum
	Security System

(15) Fireplaces

	Interior 1 Story
	Interior 2 Story
	2nd/Same Stack
	Two Sided
	Exterior 1 Story
	Exterior 2 Story
	Prefab 1 Story
	Prefab 2 Story
	Heat Circulator
	Raised Hearth
	Wood Stove
	Direct-Vented Gas

Class: Fair
Effec. Age: 20
Floor Area:
Total Base New : 45,959 E.C.F.
Total Depr Cost: 21,141 X 1.297
Estimated T.C.V: 27,420

(16) Porches/Decks

Area	Type

(17) Garage

Year Built:
Car Capacity:
Class:
Exterior:
Brick Ven.:
Stone Ven.:
Common Wall:
Foundation:
Finished ?:
Auto. Doors:
Mech. Doors:
Area:
% Good:
Storage Area:
No Conc. Floor:

Bsmnt Garage:

Carport Area:
Roof:

Cost Est. for Res. Bldg: 2 Mobile Home PLAIN Cls Fair Blt 0
(11) Heating System: Wall Furnace
Ground Area = 672 SF Floor Area = 672 SF.
Phy/Ab.Phy/Func/Econ/Comb. % Good=46/100/100/100/46
Building Areas

Type	Ext. Walls	Roof/Fnd.	Size	Cost New	Depr. Cost
Main Home	Ribbed	Metal	672		
			Total:	39,088	17,980
Other Additions/Adjustments					
Skirting, Metal or Vinyl, Vertical			96	1,070	492
Local Cost Items					
SHED			120	936	431
FREE STANDING ROOF			672	4,865	2,238
			Totals:	45,959	21,141

Notes:

ECF (RESIDENTIAL) 1.297 => TCV: 27,420

*** Information herein deemed reliable but not guaranteed***

Parcel Number: 2410-35-1411 Jurisdiction: GREENWOOD TWP County: WEXFORD Printed on 02/15/2024

Grantor	Grantee	Sale Price	Sale Date	Inst. Type	Terms of Sale	Liber & Page	Verified By	Prcnt. Trans.
SPARKS, BLENDA J	SPARKS, BRUCE D	0	02/24/2011	QC	06-COURT JUDGEMENT	637/1092	DEED	0.0
CARSTEN, JAMES & GERI SUE	SCHOENMAKER, BLENDA JEAN	8,528	11/30/1999	WD	03-ARM'S LENGTH	0	DEED	0.0

Property Address

6633 N 35 RD

Owner's Name/Address

SPARKS, BRUCE D
6633 N 35 RD
MANTON MI 49663

Tax Description

N 1/2 OF PAR "C" DESC AS COM AT E 1/4 COR OF SEC; N 618.73 FT TO POB: W 266.65 FT; N 165 FT; E 266.65 FT; S 165 FT TO POB. --1.01 A M/L-- GW SEC 35 T24N R10W -MANTON- [[ASSESSED W/ 35-1408 '99

Comments/Influences

Class: RESIDENTIAL-IMPROV Zoning:

School: MANTON CONSOLIDATED SCHOOLS

P.R.E. 100% 02/24/2011

:

2024 Est TCV 37,651 TCV/TFA: 48.02

Building Permit(s)	Date	Number	Status
Res. Add/Alter/Repair	04/13/2010	PM10-10941	

X	Improved		Vacant

	Public Improvements
	Dirt Road
X	Gravel Road
	Paved Road
	Storm Sewer
	Sidewalk
	Water
	Sewer
X	Electric
	Gas
	Curb
	Street Lights
	Standard Utilities
	Underground Utils.

	Topography of Site
X	Level
	Rolling
	Low
	High
	Landscaped
	Swamp
X	Wooded
	Pond
	Waterfront
	Ravine
	Wetland
	Flood Plain
X	OPEN

Who	When	What
GLA	05/11/2020	INSPECTION
GLA	07/10/2019	INSPECTION
GLA	07/10/2019	INSPECTION

Land Value Estimates for Land Table 4010.LAND VALUES

Description	Frontage	Depth	* Factors * Front	Depth	Rate	%Adj.	Reason	Value
ACREAGE			0.885 Acres		10,953	100		9,693
ROW			0.125 Acres		0	100		0
			1.01 Total Acres		Total Est. Land Value =			9,693

Year	Land Value	Building Value	Assessed Value	Board of Review	Tribunal/ Other	Taxable Value
2024	4,800	14,000	18,800			10,241C
2023	2,700	11,300	14,000			9,754C
2022	2,200	9,500	11,700			9,290C
2021	2,700	8,100	10,800			8,994C

The Equalizer. Copyright (c) 1999 - 2009. Licensed To: Township of Greenwood, County of Wexford, Michigan

*** Information herein deemed reliable but not guaranteed***

Building Type

	Single Family
X	Mobile Home
	Town Home
	Duplex
	A-Frame

X	Wood Frame

Building Style: SWT/DWT

Yr Built	Remodeled
0	0

Condition: Good

Room List

	Basement
	1st Floor
	2nd Floor
	Bedrooms

(1) Exterior

	Wood/Shingle
X	Aluminum/Vinyl
	Brick
X	Insulation

(2) Windows

X	Many Avg. Few	X	Large Avg. Small

	Wood Sash
	Metal Sash
X	Vinyl Sash
	Double Hung
	Horiz. Slide
	Casement
	Double Glass
	Patio Doors
X	Storms & Screens

(3) Roof

X	Gable		Gambrel
	Hip		Mansard
	Flat		Shed

X	Asphalt Shingle

Chimney:

(3) Roof (cont.)

	Eavestrough
X	Insulation
0	Front Overhang
0	Other Overhang

(4) Interior

X	Drywall		Plaster
	Paneled		Wood T&G

Trim & Decoration

	Ex	X	Ord		Min

Size of Closets

	Lg	X	Ord		Small

Doors:		Solid	X	H.C.	

(5) Floors

Kitchen:
Other: Linoleum
Other: Carpeted

(6) Ceilings

X	Drywall

(7) Excavation

Basement: 0 S.F.
Crawl: 0 S.F.
Slab: 0 S.F.
Height to Joists: 0.0

(8) Basement

	Conc. Block
	Poured Conc.
	Stone
	Treated Wood
	Concrete Floor

(9) Basement Finish

	Recreation SF
	Living SF
	Walkout Doors (B)
	No Floor SF
	Walkout Doors (A)

(10) Floor Support

Joists:
Unsupported Len:
Cntr.Sup:

(11) Heating/Cooling

X	Gas		Oil		Elec.
	Wood		Coal		Steam

X	Forced Warm Air
	Wall Furnace
	Warm & Cool Air
	Heat Pump

	Central Air
	Wood Furnace

(12) Electric

150	Amps Service

No./Qual. of Fixtures

	Ex.	X	Ord.		Min

No. of Elec. Outlets

	Many	X	Ave.		Few

(13) Plumbing

	Average Fixture(s)
1	3 Fixture Bath
	2 Fixture Bath
	Softener, Auto
	Softener, Manual
	Solar Water Heat
	No Plumbing
	Extra Toilet
	Extra Sink
	Separate Shower
	Ceramic Tile Floor
	Ceramic Tile Wains
	Ceramic Tub Alcove
	Vent Fan

(14) Water/Sewer

	Public Water
	Public Sewer
1	Water Well
1	1000 Gal Septic
	2000 Gal Septic

Lump Sum Items:

(15) Built-ins

	Appliance Allow.
	Cook Top
	Dishwasher
	Garbage Disposal
	Bath Heater
	Vent Fan
	Hot Tub
	Unvented Hood
	Vented Hood
	Intercom
	Jacuzzi Tub
	Jacuzzi repl.Tub
	Oven
	Microwave
	Standard Range
	Self Clean Range
	Sauna
	Trash Compactor
	Central Vacuum
	Security System

(15) Fireplaces

	Interior 1 Story
	Interior 2 Story
	2nd/Same Stack
	Two Sided
	Exterior 1 Story
	Exterior 2 Story
	Prefab 1 Story
	Prefab 2 Story
	Heat Circulator
	Raised Hearth
	Wood Stove
	Direct-Vented Gas

Class: Fair
Effec. Age: 25
Floor Area:
Total Base New : 61,587 E.C.F.
Total Depr Cost: 21,556 X 1.297
Estimated T.C.V: 27,958

(16) Porches/Decks

Area	Type
64	WPP
84	WPP

(17) Garage

Year Built:
Car Capacity:
Class:
Exterior:
Brick Ven.:
Stone Ven.:
Common Wall:
Foundation:
Finished ?:
Auto. Doors:
Mech. Doors:
Area:
% Good:
Storage Area:
No Conc. Floor:

Bsmnt Garage:

Carport Area:
Roof:

Cost Est. for Res. Bldg: 1 Mobile Home SWT/DWT Cls Fair Blt 0
(11) Heating System: Wall Furnace
Ground Area = 784 SF Floor Area = 784 SF.
Phy/Ab.Phy/Func/Econ/Comb. % Good=35/100/100/100/35
Building Areas

Type	Ext. Walls	Roof/Fnd.	Size	Cost New	Depr. Cost
Main Home	Ribbed	Metal	784		
			Total:	41,832	14,642
Other Additions/Adjustments					
Skirting, Metal or Vinyl, Vertical			140	1,561	546
Water/Sewer					
1000 Gal Septic			1	4,582	1,604
Water Well, 100 Feet			1	5,680	1,988
Porches					
WPP			64	2,192	767
WPP			84	2,495	873
Local Cost Items					
SHED #3			416	3,245	1,136
			Totals:	61,587	21,556

Notes:
ECF (RESIDENTIAL) 1.297 => TCV: 27,958

*** Information herein deemed reliable but not guaranteed***

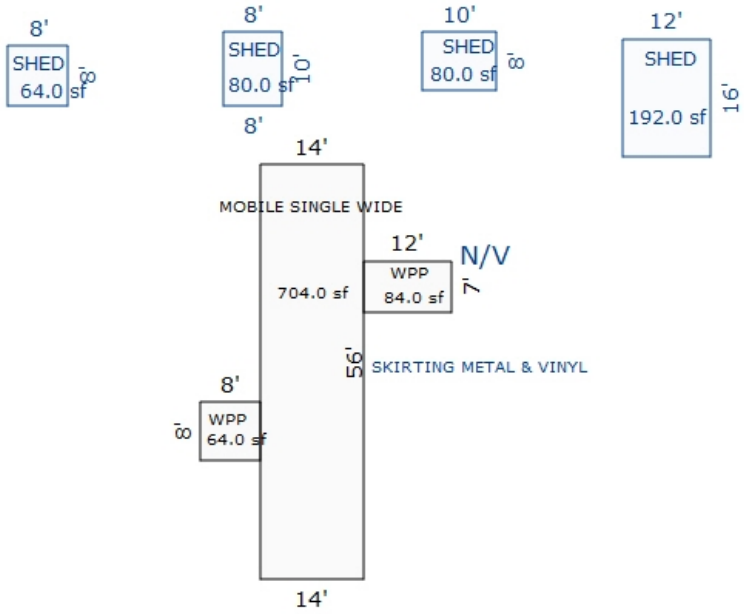

Sketch by Apex Sketch

*** Information herein deemed reliable but not guaranteed***

Parcel Number: 2410-35-2101 Jurisdiction: GREENWOOD TWP County: WEXFORD Printed on 02/15/2024

Grantor	Grantee	Sale Price	Sale Date	Inst. Type	Terms of Sale	Liber & Page	Verified By	Prcnt. Trans.

Property Address	Class: RESIDENTIAL-IMPROV	Zoning:	Building Permit(s)	Date	Number	Status
4420 E 12 RD	School: MANTON CONSOLIDATED SCHOOLS		RESIDENTIAL - REMODEL	10/08/2003	PM7097	
	P.R.E. 0%					
Owner's Name/Address	:					
COX, R. DICKIE (ET AL) C/O EILEEN COX 3570 E M-43 HASTINGS MI 49058	2024 Est TCV 108,005 TCV/TFA: 132.36					

Tax Description

W 1/2 OF NE 1/4 OF NE 1/4 OF NW 1/4 5 A. GW. SEC. 35 T24N R10W-MANTON-

Comments/Influences

The Equalizer. Copyright (c) 1999 - 2009. Licensed To: Township of Greenwood, County of Wexford, Michigan

X	Improved		Vacant

	Public Improvements
	Dirt Road
X	Gravel Road
	Paved Road
	Storm Sewer
	Sidewalk
	Water
	Sewer
X	Electric
	Gas
	Curb
	Street Lights
	Standard Utilities
	Underground Utils.

	Topography of Site
	Level
	Rolling
	Low
	High
	Landscaped
X	Swamp
X	Wooded
	Pond
	Waterfront
	Ravine
	Wetland
	Flood Plain
X	OPEN

Who	When	What
GLA	05/11/2020	INSPECTION
GLA	07/10/2019	INSPECTION
GLA	07/10/2019	INSPECTION

Land Value Estimates for Land Table 4010.LAND VALUES

Description	Frontage	Depth	* Factors * Front	Depth	Rate	%Adj.	Reason	Value
ACREAGE			4.760 Acres		5,095	100		24,254
ROW			0.240 Acres		0	100		0
			5.00 Total Acres		Total Est. Land Value =			24,254

Land Improvement Cost Estimates

Description	Rate	Size	% Good	Cash Value
D/W/P: 4in Concrete	6.11	176	45	484
Wood Frame	18.10	392	17	1,206
Total Estimated Land Improvements True Cash Value =				1,690

Year	Land Value	Building Value	Assessed Value	Board of Review	Tribunal/ Other	Taxable Value
2024	12,100	41,900	54,000			19,362C
2023	10,400	34,600	45,000			18,440C
2022	7,400	29,400	36,800			17,562C
2021	8,500	30,000	38,500			17,001C

*** Information herein deemed reliable but not guaranteed***

Building Type

X	Single Family
	Mobile Home
	Town Home
	Duplex
	A-Frame
X	Wood Frame

Building Style: PLAIN

Yr Built	Remodeled
0	0

Condition: Good

Room List

	Basement
	1st Floor
	2nd Floor
	Bedrooms

(1) Exterior

	Wood/Shingle
X	Aluminum/Vinyl
	Brick
X	Insulation

(2) Windows

	Many		Large
X	Avg.	X	Avg.
	Few		Small

	Wood Sash
	Metal Sash
X	Vinyl Sash
	Double Hung
	Horiz. Slide
	Casement
	Double Glass
	Patio Doors
X	Storms & Screens

(3) Roof

X	Gable		Gambrel
	Hip		Mansard
	Flat		Shed

X	Asphalt Shingle

Chimney:

(3) Roof (cont.)

	Eavestrough
X	Insulation
0	Front Overhang
0	Other Overhang

(4) Interior

X	Drywall		Plaster
	Paneled		Wood T&G

Trim & Decoration

	Ex	X	Ord		Min

Size of Closets

	Lg	X	Ord		Small

Doors:		Solid	X	H.C.	

(5) Floors

Kitchen:
Other: Linoleum
Other: Carpeted

(6) Ceilings

X	Drywall		

(7) Excavation

Basement: 816 S.F.
Crawl: 0 S.F.
Slab: 0 S.F.
Height to Joists: 0.0

(8) Basement

	Conc. Block
	Poured Conc.
	Stone
	Treated Wood
	Concrete Floor

(9) Basement Finish

	Recreation SF
	Living SF
	Walkout Doors (B)
	No Floor SF
	Walkout Doors (A)

(10) Floor Support

Joists:
Unsupported Len:
Cntr.Sup:

(11) Heating/Cooling

X	Gas		Oil		Elec.
	Wood		Coal		Steam

	Forced Air w/o Ducts
X	Forced Air w/ Ducts
	Forced Hot Water
	Electric Baseboard
	Elec. Ceil. Radiant
	Radiant (in-floor)
	Electric Wall Heat
	Space Heater
	Wall/Floor Furnace
	Forced Heat & Cool
	Heat Pump
	No Heating/Cooling

	Central Air
	Wood Furnace

(12) Electric

150	Amps Service

No./Qual. of Fixtures

	Ex.	X	Ord.		Min

No. of Elec. Outlets

	Many	X	Ave.		Few

(13) Plumbing

	Average Fixture(s)
1	3 Fixture Bath
	2 Fixture Bath
	Softener, Auto
	Softener, Manual
	Solar Water Heat
	No Plumbing
	Extra Toilet
	Extra Sink
	Separate Shower
	Ceramic Tile Floor
	Ceramic Tile Wains
	Ceramic Tub Alcove
	Vent Fan

(14) Water/Sewer

	Public Water
	Public Sewer
1	Water Well
1	1000 Gal Septic
	2000 Gal Septic

Lump Sum Items:

(15) Built-ins

	Appliance Allow.
	Cook Top
	Dishwasher
	Garbage Disposal
	Bath Heater
	Vent Fan
	Hot Tub
	Unvented Hood
	Vented Hood
	Intercom
	Jacuzzi Tub
	Jacuzzi repl.Tub
	Oven
	Microwave
	Standard Range
	Self Clean Range
	Sauna
	Trash Compactor
	Central Vacuum
	Security System

(15) Fireplaces

	Interior 1 Story
	Interior 2 Story
	2nd/Same Stack
	Two Sided
	Exterior 1 Story
	Exterior 2 Story
	Prefab 1 Story
	Prefab 2 Story
	Heat Circulator
	Raised Hearth
	Wood Stove
	Direct-Vented Gas

Class: D
Effec. Age: 54
Floor Area: 816
Total Base New : 137,540 E.C.F.
Total Depr Cost: 63,270 X 1.297
Estimated T.C.V: 82,061

(16) Porches/Decks

Area	Type
128	WPP
50	CCP (1 Story)
144	Brzwy, FW

(17) Garage

Year Built:
Car Capacity:
Class: D
Exterior: Siding
Brick Ven.: 0
Stone Ven.: 0
Common Wall: 1/2 Wal
Foundation: 42 Inch
Finished ?:
Auto. Doors: 0
Mech. Doors: 0
Area: 250
% Good: 0
Storage Area: 0
No Conc. Floor: 0

Bsmnt Garage:

Carport Area:
Roof:

Cost Est. for Res. Bldg: 1 Single Family PLAIN Cls D Blt 0
(11) Heating System: Forced Air w/ Ducts
Ground Area = 816 SF Floor Area = 816 SF.
Phy/Ab.Phy/Func/Econ/Comb. % Good=46/100/100/100/46
Building Areas

Stories	Exterior	Foundation	Size	Cost New	Depr. Cost
1 Story	Siding	Basement	816		
			Total:	105,497	48,529
Other Additions/Adjustments					
Water/Sewer					
1000 Gal Septic			1	4,293	1,975
Water Well, 100 Feet			1	5,545	2,551
Porches					
WPP			128	2,784	1,281
CCP (1 Story)			50	1,274	586
Garages					
Class: D Exterior: Siding Foundation: 42 Inch (Unfinished)					
Base Cost			250	11,628	5,349
Common Wall: 1/2 Wall			1	-1,163	-535
Breezeways					
Frame Wall			144	7,682	3,534
			Totals:	137,540	63,270

Notes:
ECF (RESIDENTIAL) 1.297 => TCV: 82,061

*** Information herein deemed reliable but not guaranteed***

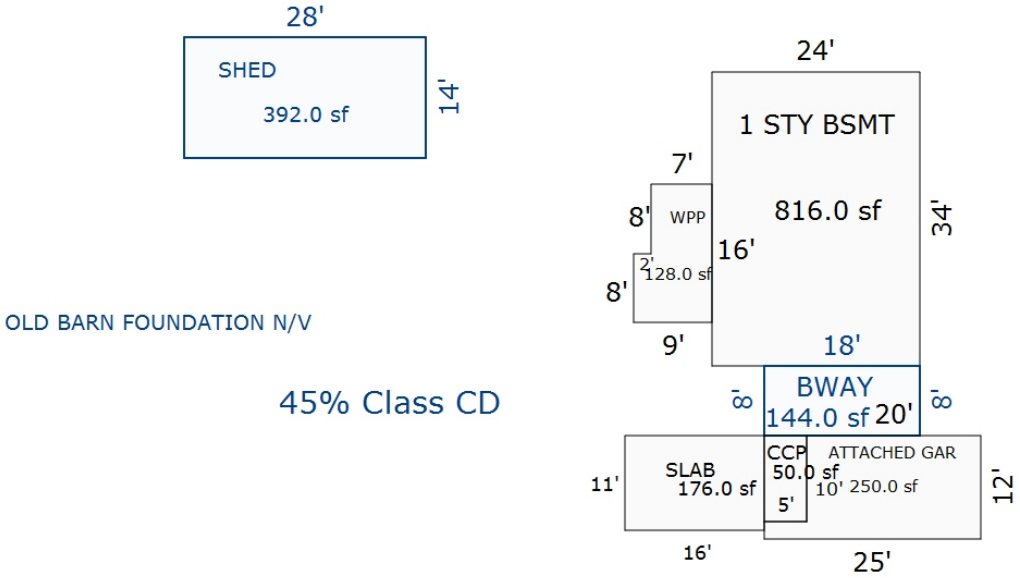

Sketch by Apex Sketch

*** Information herein deemed reliable but not guaranteed***

Parcel Number: 2410-35-2102 Jurisdiction: GREENWOOD TWP County: WEXFORD Printed on 02/15/2024

Grantor	Grantee	Sale Price	Sale Date	Inst. Type	Terms of Sale	Liber & Page	Verified By	Prcnt. Trans.
ZAVALA-SPARKS, BETTY LE	LOWING REUBEN & J RAYMER	0	08/24/2023	QC	18-LIFE ESTATE	695/2961	PROPERTY TRANSFER	0.0
ZAVALA-SPARKS, BETTY	ZAVALA-SPARKS, BETTY LE	0	11/06/2017	WD	18-LIFE ESTATE	681 /1182	DEED	0.0

Property Address

4200 E 12 RD

Owner's Name/Address

ZAVALA-SPARKS, BETTY LE
4200 E 12 RD
MANTON MI 49663

Tax Description

W 1/2 OF NE 1/4 OF NW 1/4 20 A. GW. SEC. 35 T24N R10W -MANTON-

Comments/Influences

The Equalizer. Copyright (c) 1999 - 2009. Licensed To: Township of Greenwood, County of Wexford, Michigan

Class: RESIDENTIAL-IMPROV Zoning:

School: MANTON CONSOLIDATED SCHOOLS

P.R.E. 100% / /

:

2024 Est TCV 173,349 TCV/TFA: 123.47

Building Permit(s)	Date	Number	Status
Res. Add/Alter/Repair	04/08/2010	PE10-18698	

X	Improved	
	Vacant	

	Public Improvements
	Dirt Road
X	Gravel Road
	Paved Road
	Storm Sewer
	Sidewalk
	Water
	Sewer
X	Electric
	Gas
	Curb
	Street Lights
	Standard Utilities
	Underground Utils.

	Topography of Site
	Level
X	Rolling
	Low
	High
	Landscaped
X	Swamp
X	Wooded
	Pond
	Waterfront
	Ravine
	Wetland
	Flood Plain
X	OPEN

Who	When	What
GLA	05/11/2020	INSPECTION
GLA	07/10/2019	INSPECTION
GLA	07/10/2019	INSPECTION

Land Value Estimates for Land Table 4010.LAND VALUES

Description	Frontage	Depth	* Factors * Front	Depth	Rate	%Adj.	Reason	Value
ACREAGE			19.520 Acres		3,200	100		62,464
ROW			0.480 Acres		0	100		0
			20.00 Total Acres				Total Est. Land Value =	62,464

Land Improvement Cost Estimates

Description	Rate	Size	% Good	Cash Value
D/W/P: 4in Concrete	8.21	329	45	1,215
Total Estimated Land Improvements True Cash Value =				1,215

Year	Land Value	Building Value	Assessed Value	Board of Review	Tribunal/ Other	Taxable Value
2024	31,200	55,500	86,700			49,423C
2023	25,400	44,700	70,100			47,070C
2022	21,500	37,300	58,800			44,829C
2021	19,800	31,900	51,700			43,397C

*** Information herein deemed reliable but not guaranteed***

Building Type

	Single Family
X	Mobile Home
	Town Home
	Duplex
	A-Frame

X	Wood Frame

Building Style: SWT/DWT

Yr Built	Remodeled
0	0

Condition: Good

Room List

	Basement
	1st Floor
	2nd Floor
	Bedrooms

(1) Exterior

	Wood/Shingle
	Aluminum/Vinyl
X	Brick
X	Insulation

(2) Windows

	Many		Large
X	Avg.	X	Avg.
	Few		Small

	Wood Sash
	Metal Sash
X	Vinyl Sash
	Double Hung
	Horiz. Slide
	Casement
	Double Glass
	Patio Doors
X	Storms & Screens

(3) Roof

X	Gable		Gambrel
	Hip		Mansard
	Flat		Shed

X	Asphalt Shingle

Chimney:

(3) Roof (cont.)

	Eavestrough
X	Insulation
0	Front Overhang
0	Other Overhang

(4) Interior

X	Drywall		Plaster
	Paneled		Wood T&G

Trim & Decoration

	Ex	X	Ord		Min

Size of Closets

	Lg	X	Ord		Small

Doors:		Solid	X	H.C.	

(5) Floors

Kitchen:
Other: Linoleum
Other: Carpeted

(6) Ceilings

X	Drywall		

(7) Excavation

Basement: 0 S.F.
Crawl: 0 S.F.
Slab: 0 S.F.
Height to Joists: 0.0

(8) Basement

	Conc. Block
	Poured Conc.
	Stone
	Treated Wood
	Concrete Floor

(9) Basement Finish

	Recreation SF
	Living SF
	Walkout Doors (B)
	No Floor SF
	Walkout Doors (A)

(10) Floor Support

Joists:
Unsupported Len:
Cntr.Sup:

(11) Heating/Cooling

X	Gas		Oil		Elec.
	Wood		Coal		Steam

X	Forced Warm Air
	Wall Furnace
	Warm & Cool Air
	Heat Pump

	Central Air
	Wood Furnace

(12) Electric

150	Amps Service

No./Qual. of Fixtures

	Ex.	X	Ord.		Min

No. of Elec. Outlets

	Many	X	Ave.		Few

(13) Plumbing

	Average Fixture(s)
2	3 Fixture Bath
	2 Fixture Bath
	Softener, Auto
	Softener, Manual
	Solar Water Heat
	No Plumbing
	Extra Toilet
	Extra Sink
	Separate Shower
	Ceramic Tile Floor
	Ceramic Tile Wains
	Ceramic Tub Alcove
	Vent Fan

(14) Water/Sewer

	Public Water
	Public Sewer
1	Water Well
1	1000 Gal Septic
	2000 Gal Septic

Lump Sum Items:

(15) Built-ins

	Appliance Allow.
	Cook Top
	Dishwasher
	Garbage Disposal
	Bath Heater
	Vent Fan
	Hot Tub
	Unvented Hood
	Vented Hood
	Intercom
	Jacuzzi Tub
	Jacuzzi repl.Tub
	Oven
	Microwave
	Standard Range
	Self Clean Range
	Sauna
	Trash Compactor
	Central Vacuum
	Security System

(15) Fireplaces

	Interior 1 Story
	Interior 2 Story
	2nd/Same Stack
	Two Sided
	Exterior 1 Story
	Exterior 2 Story
	Prefab 1 Story
	Prefab 2 Story
	Heat Circulator
	Raised Hearth
	Wood Stove
	Direct-Vented Gas

Class: Good
Effec. Age: 24
Floor Area:
Total Base New : 179,905 E.C.F.
Total Depr Cost: 84,557 X 1.297
Estimated T.C.V: 109,670

(16) Porches/Decks

Area	Type
15	WPP
18	WPP

(17) Garage

Year Built:
Car Capacity:
Class: CD
Exterior: Siding
Brick Ven.: 0
Stone Ven.: 0
Common Wall: Detache
Foundation: 18 Inch
Finished ?:
Auto. Doors: 0
Mech. Doors: 0
Area: 576
% Good: 0
Storage Area: 0
No Conc. Floor: 0

Bsmnt Garage:

Carport Area:
Roof:

Cost Est. for Res. Bldg: 1 Mobile Home SWT/DWT Cls Good Blt 0
(11) Heating System: Wall Furnace
Ground Area = 1404 SF Floor Area = 1404 SF.
Phy/Ab.Phy/Func/Econ/Comb. % Good=47/100/100/100/47
Building Areas

Type	Ext. Walls	Roof/Fnd.	Size	Cost New	Depr. Cost
Main Home	Siding	Comp.Shingle	1404		
			Total:	114,273	53,709
Other Additions/Adjustments					
Skirting, Metal or Vinyl, Sim. St/Brk			158	3,342	1,571
Plumbing					
3 Fixture Bath			1	3,949	1,856
Water/Sewer					
1000 Gal Septic			1	5,676	2,668
Water Well, 100 Feet			1	6,289	2,956
Garages					
Class: CD Exterior: Siding Foundation: 18 Inch (Unfinished)					
Base Cost			576	19,935	9,369
Class: CD Exterior: Pole (Unfinished)					
Base Cost			1568	34,104	16,029
No Concrete Floor			1568	-9,643	-4,532
Porches					
WPP			15	900	423
WPP			18	1,080	508
			Totals:	179,905	84,557

Notes:
ECF (RESIDENTIAL) 1.297 => TCV: 109,670

*** Information herein deemed reliable but not guaranteed***

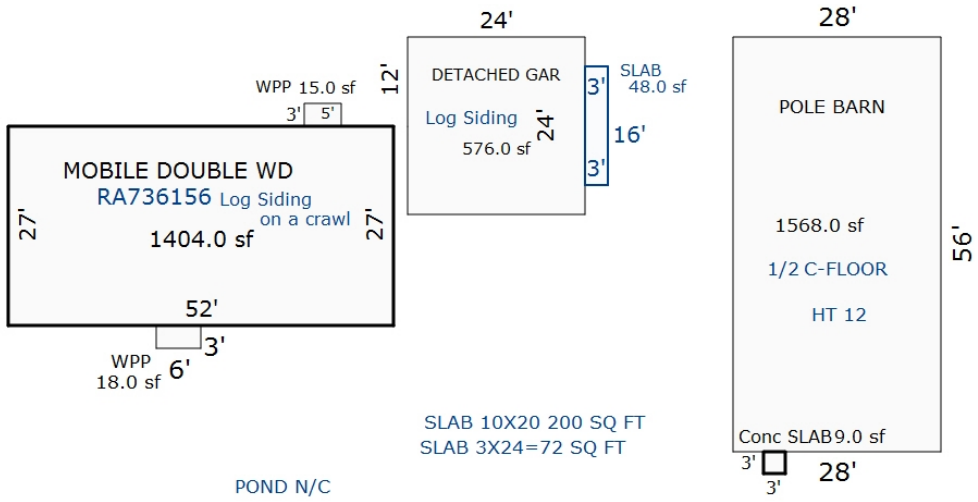

Sketch by Apex Sketch

*** Information herein deemed reliable but not guaranteed***

Parcel Number: 2410-35-2103 Jurisdiction: GREENWOOD TWP County: WEXFORD Printed on 02/15/2024

Grantor	Grantee	Sale Price	Sale Date	Inst. Type	Terms of Sale	Liber & Page	Verified By	Prcnt. Trans.
COX, DICKIE R.	COX, RANDY D.	6,500	08/24/1990	WD	03-ARM'S LENGTH	322:104	DEED	0.0

Property Address

Owner's Name/Address

COX, RANDY D.
3570 E M-43
HASTINGS MI 49058

Tax Description

E 1/2 OF NE 1/4 OF NW 1/4 EXC W 1/2 OF N 1/2 THEREOF 15 A. M/L GW. SEC. 35 T24N R10W -MANTON-

Comments/Influences

The Equalizer. Copyright (c) 1999 - 2009. Licensed To: Township of Greenwood, County of Wexford, Michigan

Class: RESIDENTIAL-VACANT Zoning:

School: MANTON CONSOLIDATED SCHOOLS

P.R.E. 0%

:

2024 Est TCV 47,918

Building Permit(s)	Date	Number	Status

	Improved	X	Vacant

	Public Improvements
X	Dirt Road
	Gravel Road
	Paved Road
	Storm Sewer
	Sidewalk
	Water
	Sewer
X	Electric
	Gas
	Curb
	Street Lights
	Standard Utilities
	Underground Utils.

	Topography of Site
	Level
X	Rolling
	Low
	High
	Landscaped
X	Swamp
X	Wooded
	Pond
	Waterfront
	Ravine
	Wetland
	Flood Plain
X	OPEN

Who	When	What
GLA	05/11/2020	INSPECTION
GLA	07/10/2019	INSPECTION
GLA	07/10/2019	INSPECTION

Land Value Estimates for Land Table 4010.LAND VALUES

Description	Frontage	Depth	* Factors * Front	Depth	Rate	%Adj.	Reason	Value
ACREAGE			14.750 Acres		3,249	100		47,918
ROW			0.250 Acres		0	100		0
			15.00 Total Acres		Total Est. Land Value =			47,918

Year	Land Value	Building Value	Assessed Value	Board of Review	Tribunal/ Other	Taxable Value
2024	24,000	0	24,000			10,621C
2023	19,200	0	19,200			10,116C
2022	17,000	0	17,000			9,635C
2021	17,700	0	17,700			9,328C

*** Information herein deemed reliable but not guaranteed***

Parcel Number: 2410-35-2201 Jurisdiction: GREENWOOD TWP County: WEXFORD Printed on 02/15/2024

Grantor	Grantee	Sale Price	Sale Date	Inst. Type	Terms of Sale	Liber & Page	Verified By	Prcnt. Trans.
SPEER JUDITH	SPEER JUDITH & MICHAEL	0	09/29/2023	QC	21-NOT USED/OTHER	696/527	DEED	0.0
TOKAR, PATRICK ALLEN	SPEER JUDITH	0	06/23/2023	QC	21-NOT USED/OTHER	695/1641	DEED	100.0
SPEER, JUDITH ANN	TOKAR, PATRICK ALLEN	117,000	09/04/2018	WD	03-ARM'S LENGTH	683/1854	DEED	100.0
SPEER, MICHAEL D	SPEER, JUDITH ANN	0	06/23/2008	QC	06-COURT JUDGEMENT	612/1878	DEED	0.0

Property Address

6764 N 33 RD

Owner's Name/Address

SPEER JUDITH & MICHAEL
6764 N 33 RD
MANTON MI 49663

Tax Description

S 1/4 OF NW 1/4 OF NW 1/4 10 A. GW. SEC. 35 T24N R10W -MANTON-

Comments/Influences

Class: RESIDENTIAL-IMPROV Zoning:

School: MANTON CONSOLIDATED SCHOOLS

P.R.E. 0% Qual. Ag.

:

2024 Est TCV 289,350 TCV/TFA: 241.13

Building Permit(s)	Date	Number	Status
RESIDENTIAL - NEW	01/07/2003	PM6502	
RESIDENTIAL - NEW	11/26/2001	PM5521	
RESIDENTIAL - NEW	06/29/2001	PP2247	
RESIDENTIAL - NEW	05/08/2001	PE13645	

X	Improved		Vacant

	Public Improvements
	Dirt Road
X	Gravel Road
	Paved Road
	Storm Sewer
	Sidewalk
	Water
	Sewer
X	Electric
	Gas
	Curb
	Street Lights
	Standard Utilities
	Underground Utils.

	Topography of Site
	Level
X	Rolling
	Low
	High
	Landscaped
	Swamp
	Wooded
	Pond
	Waterfront
	Ravine
	Wetland
	Flood Plain
X	OPEN

Who	When	What
GLA	05/11/2020	INSPECTION
GLA	07/10/2019	INSPECTION
GLA	07/10/2019	INSPECTION

Land Value Estimates for Land Table 4010.LAND VALUES

Description	Frontage	Depth	* Factors * Front	Depth	Rate	%Adj.	Reason	Value
ACREAGE			9.750 Acres		4,664	100		45,470
ROW			0.250 Acres		0	100		0
			10.00 Total Acres		Total Est. Land Value =			45,470

Land Improvement Cost Estimates

Description	Rate	Size	% Good	Cash Value
D/W/P: 4in Concrete	7.01	216	45	681
Total Estimated Land Improvements True Cash Value =				681

Year	Land Value	Building Value	Assessed Value	Board of Review	Tribunal/ Other	Taxable Value
2024	22,700	122,000	144,700			144,700S
2023	12,900	99,500	112,400			98,623C
2022	11,900	83,900	95,800			93,927C
2021	12,000	84,800	96,800			90,927C

The Equalizer. Copyright (c) 1999 - 2009.
Licensed To: Township of Greenwood, County of Wexford, Michigan

*** Information herein deemed reliable but not guaranteed***

Building Type

X	Single Family
	Mobile Home
	Town Home
	Duplex
	A-Frame
X	Wood Frame

Building Style: PLAIN

Yr Built	Remodeled
2001	0

Condition: Good

Room List

	Basement
	1st Floor
	2nd Floor
	Bedrooms

(1) Exterior

	Wood/Shingle
X	Aluminum/Vinyl
	Brick
X	Insulation

(2) Windows

X	Many Avg. Few		Large Avg. Small

	Wood Sash
	Metal Sash
X	Vinyl Sash
	Double Hung
	Horiz. Slide
	Casement
	Double Glass
	Patio Doors
X	Storms & Screens

(3) Roof

X	Gable		Gambrel
	Hip		Mansard
	Flat		Shed

X	Asphalt Shingle

Chimney:

(3) Roof (cont.)

	Eavestrough
X	Insulation
0	Front Overhang
0	Other Overhang

(4) Interior

X	Drywall Paneled		Plaster Wood T&G

Trim & Decoration

	Ex	X	Ord		Min

Size of Closets

	Lg	X	Ord		Small

Doors:		Solid	X	H.C.	

(5) Floors

Kitchen:
Other: Linoleum
Other: Carpeted

(6) Ceilings

X	Drywall

(7) Excavation

Basement: 816 S.F.
Crawl: 0 S.F.
Slab: 0 S.F.
Height to Joists: 0.0

(8) Basement

	Conc. Block
	Poured Conc.
	Stone
	Treated Wood
	Concrete Floor

(9) Basement Finish

	Recreation	SF
	Living	SF
1	Walkout Doors	(B)
	No Floor	SF
	Walkout Doors	(A)

(10) Floor Support

Joists:
Unsupported Len:
Cntr.Sup:

(11) Heating/Cooling

X	Gas		Oil		Elec.
	Wood		Coal		Steam

	Forced Air w/o Ducts
X	Forced Air w/ Ducts
	Forced Hot Water
	Electric Baseboard
	Elec. Ceil. Radiant
	Radiant (in-floor)
	Electric Wall Heat
	Space Heater
	Wall/Floor Furnace
	Forced Heat & Cool
	Heat Pump
	No Heating/Cooling

	Central Air
	Wood Furnace

(12) Electric

150	Amps Service

No./Qual. of Fixtures

	Ex.	X	Ord.		Min

No. of Elec. Outlets

	Many	X	Ave.		Few

(13) Plumbing

1	Average Fixture(s)
	3 Fixture Bath
	2 Fixture Bath
	Softener, Auto
	Softener, Manual
	Solar Water Heat
	No Plumbing
	Extra Toilet
	Extra Sink
	Separate Shower
	Ceramic Tile Floor
	Ceramic Tile Wains
	Ceramic Tub Alcove
	Vent Fan

(14) Water/Sewer

	Public Water
	Public Sewer
1	Water Well
1	1000 Gal Septic
	2000 Gal Septic

Lump Sum Items:

(15) Built-ins

	Appliance Allow.
	Cook Top
	Dishwasher
	Garbage Disposal
	Bath Heater
	Vent Fan
	Hot Tub
	Unvented Hood
	Vented Hood
	Intercom
	Jacuzzi Tub
	Jacuzzi repl.Tub
	Oven
	Microwave
	Standard Range
	Self Clean Range
	Sauna
	Trash Compactor
	Central Vacuum
	Security System

(15) Fireplaces

	Interior 1 Story
	Interior 2 Story
	2nd/Same Stack
	Two Sided
	Exterior 1 Story
	Exterior 2 Story
	Prefab 1 Story
	Prefab 2 Story
	Heat Circulator
	Raised Hearth
	Wood Stove
	Direct-Vented Gas

Class: C
Effec. Age: 23
Floor Area: 1,200
Total Base New : 243,518 E.C.F.
Total Depr Cost: 187,509 X 1.297
Estimated T.C.V: 243,199

(16) Porches/Decks

Area	Type
204	WCP (1 Story)
28	WPP
243	WPP
48	Treated Wood

(17) Garage

Year Built:
Car Capacity:
Class: C
Exterior: Siding
Brick Ven.: 0
Stone Ven.: 0
Common Wall: Detache
Foundation: 42 Inch
Finished ?:
Auto. Doors: 0
Mech. Doors: 0
Area: 910
% Good: 0
Storage Area: 0
No Conc. Floor: 0

Bsmnt Garage:

Carport Area:
Roof:

Cost Est. for Res. Bldg: 1 Single Family PLAIN Cls C Blt 2001
(11) Heating System: Forced Air w/ Ducts
Ground Area = 816 SF Floor Area = 1200 SF.
Phy/Ab.Phy/Func/Econ/Comb. % Good=77/100/100/100/77
Building Areas

Stories	Exterior	Foundation	Size	Cost New	Depr. Cost
2 Story	Pine Logs	Basement	384		
1+ Story	Siding	Basement	432		
			Total:	179,199	137,984
Other Additions/Adjustments					
Basement, Outside Entrance, Below Grade			1	2,578	1,985
Water/Sewer					
1000 Gal Septic			1	4,899	3,772
Water Well, 100 Feet			1	5,849	4,504
Porches					
WCP (1 Story)			204	8,184	6,302
WPP			28	1,494	1,150
WPP			243	4,947	3,809
Deck					
Treated Wood			48	1,742	1,341
Garages					
Class: C Exterior: Siding Foundation: 42 Inch (Unfinished)					
Base Cost			910	34,626	26,662
			Totals:	243,518	187,509

Notes:

ECF (RESIDENTIAL) 1.297 => TCV: 243,199

*** Information herein deemed reliable but not guaranteed***

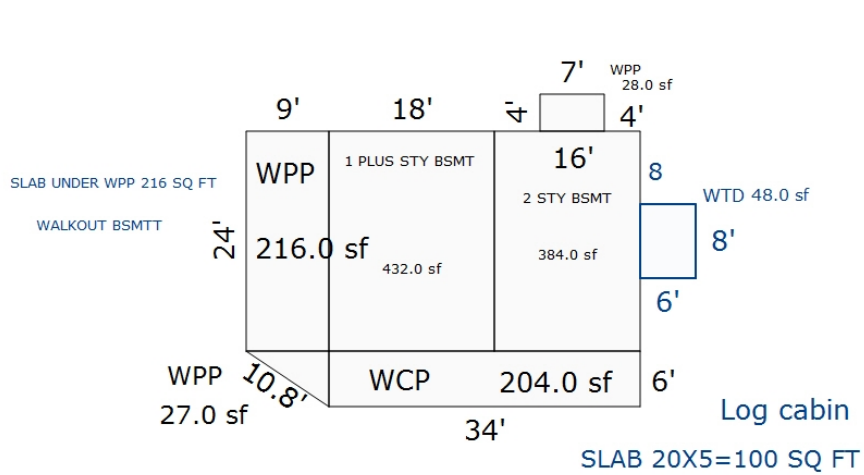

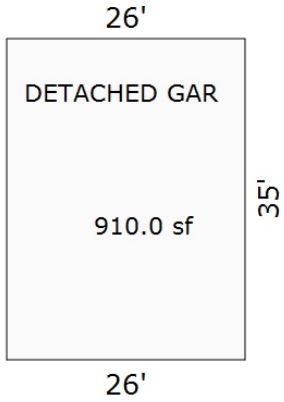

Sketch by Apex Sketch

*** Information herein deemed reliable but not guaranteed***

Parcel Number: 2410-35-2202 Jurisdiction: GREENWOOD TWP County: WEXFORD Printed on 02/15/2024

Grantor	Grantee	Sale Price	Sale Date	Inst. Type	Terms of Sale	Liber & Page	Verified By	Prcnt. Trans.
PERRO, DELWIN F	WEXFORD COUNTY	42,000	04/27/2018	QC	03-ARM'S LENGTH	682 /1724	DEED	100.0
CUSENZA, FRANCESCO & JACQU	PERRO, DELWIN & PATRICIA	19,000	08/27/2002	WD	03-ARM'S LENGTH	437:858	DEED	0.0

Property Address

Owner's Name/Address

WEXFORD COUNTY
BOARD OF COUNTY ROAD COMMISIONERS
P O BOX 163
LAKE MI 48632

Tax Description

PAR E, COM AT NW COR OF SEC; S 317.06 FT TO POB: S 339.85 FT E 1282.48 FT; N 339.85 FT; W 1281.4 FT TO POB. --10 A M/L- GW. SEC. 35 T24N R10W -MANTON-

Comments/Influences

The Equalizer. Copyright (c) 1999 - 2009.
Licensed To: Township of Greenwood, County of Wexford, Michigan

Class: COMMERCIAL-VACANT Zoning:

School: MANTON CONSOLIDATED SCHOOLS

P.R.E. 0%

:

2024 Est TCV 0

Building Permit(s)	Date	Number	Status

	Improved	X	Vacant

	Public Improvements
X	Dirt Road
X	Gravel Road
	Paved Road
	Storm Sewer
	Sidewalk
	Water
	Sewer
X	Electric
	Gas
	Curb
	Street Lights
	Standard Utilities
	Underground Utils.

	Topography of Site
X	Level
	Rolling
	Low
	High
	Landscaped
	Swamp
	Wooded
	Pond
	Waterfront
	Ravine
	Wetland
	Flood Plain
X	OPEN

Who	When	What
GLA	05/11/2020	INSPECTION
GLA	07/10/2019	INSPECTION
GLA	07/10/2019	INSPECTION

Land Value Estimates for Land Table 4010.LAND VALUES

Description	Frontage	Depth	* Factors * Front	Depth	Rate	%Adj.	Reason	Value
ACREAGE			9.750	Acres	4,664	100		45,470
ROW			0.250	Acres	0	100		0
			10.00	Total Acres	Total Est. Land Value =			45,470

Year	Land Value	Building Value	Assessed Value	Board of Review	Tribunal/ Other	Taxable Value
2024	EXEMPT	EXEMPT	EXEMPT			EXEMPT
2023	EXEMPT	EXEMPT	EXEMPT			EXEMPT
2022	0	0	0			0
2021	0	0	0			0

*** Information herein deemed reliable but not guaranteed***

Parcel Number: 2410-35-2203 Jurisdiction: GREENWOOD TWP County: WEXFORD Printed on 02/15/2024

Grantor	Grantee	Sale Price	Sale Date	Inst. Type	Terms of Sale	Liber & Page	Verified By	Prcnt. Trans.
CUSENZA, FRANCESCO & JACQU	STALEY, JUDY A	9,900	03/21/2002	WD	08-ESTATE	386:931	DEED	0.0
STALEY, JUDY A	RUPPERT, JASON M	16,500	03/20/2002	WD	03-ARM'S LENGTH	386:933	DEED	0.0

Property Address
4244 E 12 RD

Owner's Name/Address
RUPPERT, JASON M
4244 E 12 RD
MANTON MI 49663

Tax Description
PAR A, COM AT NW COR OF SEC; E 960.3 FT TO POB: E 320.1 FT; S 317.64 FT; W 320.35 FT; N 317.49 FT TO POB. 2.334 A M/L GW SEC 35 T24N R10W -MANTON- [[ASSESSED W/ 35-2202 '00

Comments/Influences

Class: RESIDENTIAL-IMPROV Zoning:
School: MANTON CONSOLIDATED SCHOOLS
P.R.E. 100% / /
:
2024 Est TCV 288,671 TCV/TFA: 182.24

Building Permit(s)	Date	Number	Status
RESIDENTIAL - REMODEL	07/21/2006	PB13253	
RESIDENTIAL - REMODEL	03/01/2004	PE15947	
RESIDENTIAL - REMODEL	08/15/2003	PB11778	
RESIDENTIAL - NEW	11/19/2002	PM6379	

X Improved | Vacant

Public Improvements
X Dirt Road
X Gravel Road
Paved Road
Storm Sewer
Sidewalk
Water
Sewer
X Electric
Gas
Curb
Street Lights
Standard Utilities
Underground Utils.

Topography of Site
X Level
X Rolling
Low
High
Landscaped
Swamp
Wooded
Pond
Waterfront
Ravine
Wetland
Flood Plain
X OPEN

Who	When	What
GLA	05/11/2020	INSPECTION
GLA	07/10/2019	INSPECTION
GLA	07/10/2019	INSPECTION

Land Value Estimates for Land Table 4010.LAND VALUES

Description	Frontage	Depth	* Factors * Front	Depth	Rate	%Adj.	Reason	Value
ACREAGE			2.090 Acres		5,546	100		11,591
ROW			0.240 Acres		0	100		0
			2.33 Total Acres		Total Est. Land Value =			11,591

Land Improvement Cost Estimates

Description	Rate	Size	% Good	Cash Value
D/W/P: Asphalt Paving	3.12	4447	46	6,382
D/W/P: 3.5 Concrete	6.63	368	56	1,366
Wood Frame	29.74	96	46	1,313
Total Estimated Land Improvements True Cash Value =				9,061

Year	Land Value	Building Value	Assessed Value	Board of Review	Tribunal/ Other	Taxable Value
2024	5,800	138,500	144,300			81,632C
2023	5,700	113,700	119,400			77,745C
2022	4,700	96,300	101,000			74,043C
2021	4,900	97,200	102,100			71,678C

The Equalizer. Copyright (c) 1999 - 2009.
Licensed To: Township of Greenwood, County of Wexford, Michigan

*** Information herein deemed reliable but not guaranteed***

Building Type

X	Single Family
	Mobile Home
	Town Home
	Duplex
	A-Frame
X	Wood Frame

Building Style: PLAIN

Yr Built	Remodeled
2002	0

Condition: Good

Room List

	Basement
	1st Floor
	2nd Floor
	Bedrooms

(1) Exterior

	Wood/Shingle
X	Aluminum/Vinyl
	Brick
X	Insulation

(2) Windows

X	Many Avg. Few	X	Large Avg. Small

	Wood Sash
	Metal Sash
X	Vinyl Sash
	Double Hung
	Horiz. Slide
	Casement
	Double Glass
	Patio Doors
X	Storms & Screens

(3) Roof

X	Gable Hip Flat		Gambrel Mansard Shed
X	Asphalt Shingle		

Chimney:

(3) Roof (cont.)

	Eavestrough
X	Insulation
0	Front Overhang
0	Other Overhang

(4) Interior

X	Drywall Paneled		Plaster Wood T&G

Trim & Decoration

	Ex	X	Ord		Min

Size of Closets

	Lg	X	Ord		Small

Doors: | | Solid | X | H.C.

(5) Floors

Kitchen:
Other: Linoleum
Other: Carpeted

(6) Ceilings

X	Drywall		

(7) Excavation

Basement: 864 S.F.
Crawl: 0 S.F.
Slab: 720 S.F.
Height to Joists: 0.0

(8) Basement

	Conc. Block
	Poured Conc.
	Stone
	Treated Wood
	Concrete Floor

(9) Basement Finish

	Recreation	SF
720	Living	SF
1	Walkout Doors	(B)
	No Floor	SF
	Walkout Doors	(A)

(10) Floor Support

Joists:
Unsupported Len:
Cntr.Sup:

(11) Heating/Cooling

X	Gas Wood		Oil Coal		Elec. Steam

	Forced Air w/o Ducts
X	Forced Air w/ Ducts
	Forced Hot Water
	Electric Baseboard
	Elec. Ceil. Radiant
	Radiant (in-floor)
	Electric Wall Heat
	Space Heater
	Wall/Floor Furnace
	Forced Heat & Cool
	Heat Pump
	No Heating/Cooling
	Central Air
	Wood Furnace

(12) Electric

150	Amps Service

No./Qual. of Fixtures

	Ex.	X	Ord.		Min

No. of Elec. Outlets

	Many	X	Ave.		Few

(13) Plumbing

	Average Fixture(s)
1	3 Fixture Bath
	2 Fixture Bath
	Softener, Auto
	Softener, Manual
	Solar Water Heat
	No Plumbing
	Extra Toilet
	Extra Sink
	Separate Shower
	Ceramic Tile Floor
	Ceramic Tile Wains
	Ceramic Tub Alcove
	Vent Fan

(14) Water/Sewer

	Public Water
	Public Sewer
1	Water Well
1	1000 Gal Septic
	2000 Gal Septic

Lump Sum Items:

(15) Built-ins

	Appliance Allow.
	Cook Top
	Dishwasher
	Garbage Disposal
	Bath Heater
	Vent Fan
	Hot Tub
	Unvented Hood
	Vented Hood
	Intercom
	Jacuzzi Tub
	Jacuzzi repl.Tub
	Oven
	Microwave
	Standard Range
	Self Clean Range
	Sauna
	Trash Compactor
	Central Vacuum
	Security System

(15) Fireplaces

	Interior 1 Story
	Interior 2 Story
	2nd/Same Stack
	Two Sided
	Exterior 1 Story
	Exterior 2 Story
	Prefab 1 Story
	Prefab 2 Story
	Heat Circulator
	Raised Hearth
	Wood Stove
	Direct-Vented Gas

Class: CD
Effec. Age: 22
Floor Area: 1,584
Total Base New : 266,929 E.C.F.
Total Depr Cost: 206,645 X 1.297
Estimated T.C.V: 268,019

(16) Porches/Decks

Area	Type
80	4in Concrete
344	WPP

(17) Garage

Year Built:
Car Capacity:
Class: CD
Exterior: Siding
Brick Ven.: 0
Stone Ven.: 0
Common Wall: Detache
Foundation: 42 Inch
Finished ?:
Auto. Doors: 0
Mech. Doors: 0
Area: 864
% Good: 0
Storage Area: 0
No Conc. Floor: 0

Bsmnt Garage:

Carport Area:
Roof:

Cost Est. for Res. Bldg: 1 Single Family PLAIN Cls CD Blt 2002
(11) Heating System: Forced Air w/ Ducts
Ground Area = 1584 SF Floor Area = 1584 SF.
Phy/Ab.Phy/Func/Econ/Comb. % Good=78/100/100/100/78
Building Areas

Stories	Exterior	Foundation	Size	Cost New	Depr. Cost	
1 Story	Siding	Basement	864			
1 Story	Siding	Slab	720			
			Total:	189,735	147,993	
Other Additions/Adjustments						
Basement Living Area			720	24,242	18,909	
Basement, Outside Entrance, Below Grade			1	2,176	1,697	
Water/Sewer						
1000 Gal Septic			1	4,582	3,574	
Water Well, 100 Feet			1	5,680	4,430	
Porches						
WPP			344	5,146	4,014	
4in Concrete			80	592	462	
Garages						
Class: CD Exterior: Siding Foundation: 42 Inch (Unfinished)						
Base Cost			864	29,903	23,324	
Local Cost Items						
FREE STANDING ROOF			673	4,873	2,242	*4
			Totals:	266,929	206,645	

Notes:

ECF (RESIDENTIAL) 1.297 => TCV: 268,019

*** Information herein deemed reliable but not guaranteed***

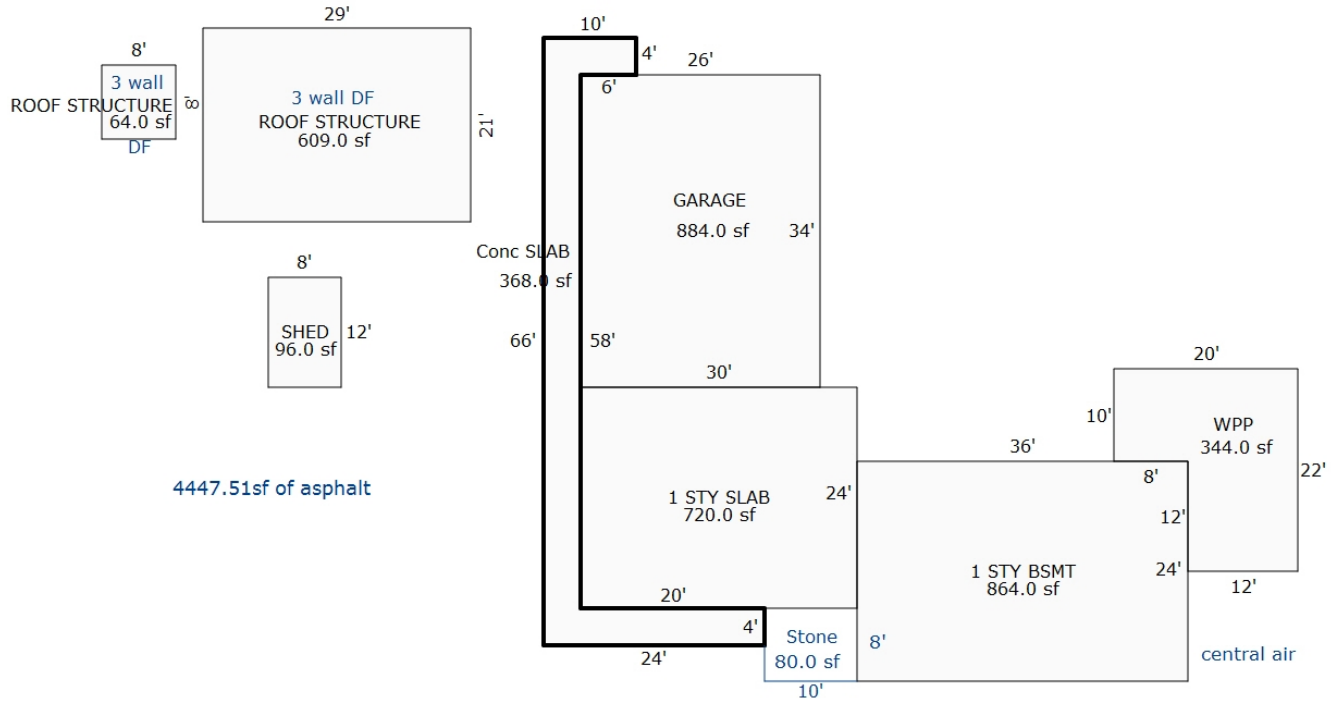

Sketch by Apex Sketch

*** Information herein deemed reliable but not guaranteed***

Parcel Number: 2410-35-2204 Jurisdiction: GREENWOOD TWP County: WEXFORD Printed on 02/15/2024

Grantor	Grantee	Sale Price	Sale Date	Inst. Type	Terms of Sale	Liber & Page	Verified By	Prcnt. Trans.
HOSE, DONALD L	FLOHE, EMIL H	43,500	10/12/2012	WD	03-ARM'S LENGTH	652/1216	DEED	100.0
HOSE, JOANNE M NKA ROBERTS	HOSE, DONALD L	0	09/27/2010	OTH	06-COURT JUDGEMENT	640/140	DEED	0.0
JANES, WILLIAM & LISA	HOSE, DONALD L	10,000	04/07/2005	WD	03-ARM'S LENGTH	570:1853	DEED	0.0
CUSENZA, FRANCESCO & JACQU	JANES, WILLIAM & LISA	15,000	12/10/2002	WD	03-ARM'S LENGTH	458:801	DEED	0.0

Property Address

4160 E 12 RD

Owner's Name/Address

FLOHE, EMIL H
7750 E 500N
WILKINSON IN 46186

Tax Description

PAR B, COM AT NW COR OF SEC; E 640.2 FT TO POB: S 317.35 FT; E 320.35 FT; N 317.49 W 320.1 FT TO POB. 2.333 A M/L GW SEC 35 T24N R10W -MANTON- [[ASSESSED W/ 35-2202 '00

Comments/Influences

The Equalizer. Copyright (c) 1999 - 2009. Licensed To: Township of Greenwood, County of Wexford, Michigan

Class: RESIDENTIAL-IMPROV Zoning:

School: MANTON CONSOLIDATED SCHOOLS

P.R.E. 0%

:

2024 Est TCV 70,121 TCV/TFA: 64.93

Building Permit(s)	Date	Number	Status
RESIDENTIAL - NEW	05/18/2005	PM8409	
MOBILE HOME	05/11/2005	PM8399	
MOBILE HOME	05/11/2005	PP3846	
RESIDENTIAL - NEW	05/10/2005	PE16834	

X Improved | Vacant

Public Improvements

- X Dirt Road
- X Gravel Road
- Paved Road
- Storm Sewer
- Sidewalk
- Water
- Sewer
- X Electric
- Gas
- Curb
- Street Lights
- Standard Utilities
- Underground Utils.

Topography of Site

- Level
- X Rolling
- Low
- High
- Landscaped
- Swamp
- X Wooded
- Pond
- Waterfront
- Ravine
- Wetland
- Flood Plain
- X OPEN

Who	When	What
GLA	05/11/2020	INSPECTION
GLA	07/10/2019	INSPECTION
GLA	07/10/2019	INSPECTION

Land Value Estimates for Land Table 4010.LAND VALUES

Description	Frontage	Depth	* Factors * Front	Depth	Rate	%Adj.	Reason	Value
ACREAGE			2.091 Acres		5,546	100		11,597
ROW			0.243 Acres		0	100		0
			2.33 Total Acres		Total Est. Land Value =			11,597

Land Improvement Cost Estimates

Description	Rate	Size	% Good	Cash Value
Fencing: Vnyl, 2 Rail	16.41	72	40	473
Fencing: Wd, Solid, 6 ft.	31.10	84	40	1,045
Wood Frame	28.20	120	50	1,692
Total Estimated Land Improvements True Cash Value =				3,210

Year	Land Value	Building Value	Assessed Value	Board of Review	Tribunal/ Other	Taxable Value
2024	5,800	29,300	35,100			26,828C
2023	5,800	25,200	31,000			25,551C
2022	4,700	22,400	27,100			24,335C
2021	4,900	20,000	24,900			23,558C

*** Information herein deemed reliable but not guaranteed***

Building Type

	Single Family
X	Mobile Home
	Town Home
	Duplex
	A-Frame

X	Wood Frame

Building Style: PLAIN

Yr Built	Remodeled
0	0

Condition: Good

Room List

	Basement
	1st Floor
	2nd Floor
	Bedrooms

(1) Exterior

	Wood/Shingle
X	Aluminum/Vinyl
	Brick
X	Insulation

(2) Windows

	Many		Large
X	Avg.	X	Avg.
	Few		Small

	Wood Sash
	Metal Sash
X	Vinyl Sash
	Double Hung
	Horiz. Slide
	Casement
	Double Glass
	Patio Doors
X	Storms & Screens

(3) Roof

X	Gable		Gambrel
	Hip		Mansard
	Flat		Shed

X	Asphalt Shingle

Chimney:

(3) Roof (cont.)

	Eavestrough
X	Insulation
0	Front Overhang
0	Other Overhang

(4) Interior

X	Drywall		Plaster
	Paneled		Wood T&G

Trim & Decoration

	Ex	X	Ord		Min

Size of Closets

	Lg	X	Ord		Small

Doors:		Solid	X	H.C.	

(5) Floors

Kitchen:
Other: Linoleum
Other: Carpeted

(6) Ceilings

X	Drywall		

(7) Excavation

Basement: 0 S.F.
Crawl: 0 S.F.
Slab: 0 S.F.
Height to Joists: 0.0

(8) Basement

	Conc. Block
	Poured Conc.
	Stone
	Treated Wood
	Concrete Floor

(9) Basement Finish

	Recreation SF
	Living SF
	Walkout Doors (B)
	No Floor SF
	Walkout Doors (A)

(10) Floor Support

Joists:
Unsupported Len:
Cntr.Sup:

(11) Heating/Cooling

X	Gas		Oil		Elec.
	Wood		Coal		Steam

X	Forced Warm Air
	Wall Furnace
	Warm & Cool Air
	Heat Pump

	Central Air
	Wood Furnace

(12) Electric

150	Amps Service

No./Qual. of Fixtures

	Ex.	X	Ord.		Min

No. of Elec. Outlets

	Many	X	Ave.		Few

(13) Plumbing

	Average Fixture(s)
2	3 Fixture Bath
	2 Fixture Bath
	Softener, Auto
	Softener, Manual
	Solar Water Heat
	No Plumbing
	Extra Toilet
	Extra Sink
	Separate Shower
	Ceramic Tile Floor
	Ceramic Tile Wains
	Ceramic Tub Alcove
	Vent Fan

(14) Water/Sewer

	Public Water
	Public Sewer
1	Water Well
1	1000 Gal Septic
	2000 Gal Septic

Lump Sum Items:

(15) Built-ins

	Appliance Allow.
	Cook Top
	Dishwasher
	Garbage Disposal
	Bath Heater
	Vent Fan
	Hot Tub
	Unvented Hood
	Vented Hood
	Intercom
	Jacuzzi Tub
	Jacuzzi repl.Tub
	Oven
	Microwave
	Standard Range
	Self Clean Range
	Sauna
	Trash Compactor
	Central Vacuum
	Security System

(15) Fireplaces

	Interior 1 Story
	Interior 2 Story
	2nd/Same Stack
	Two Sided
	Exterior 1 Story
	Exterior 2 Story
	Prefab 1 Story
	Prefab 2 Story
	Heat Circulator
	Raised Hearth
	Wood Stove
	Direct-Vented Gas

Class: Fair
Effec. Age: 19
Floor Area:
Total Base New : 88,850 E.C.F.
Total Depr Cost: 42,648 X 1.297
Estimated T.C.V: 55,314

(16) Porches/Decks

Area	Type
64	Treated Wood
6	Treated Wood

(17) Garage

Year Built:
Car Capacity:
Class:
Exterior:
Brick Ven.:
Stone Ven.:
Common Wall:
Foundation:
Finished ?:
Auto. Doors:
Mech. Doors:
Area:
% Good:
Storage Area:
No Conc. Floor:

Bsmnt Garage:

Carport Area:
Roof:

Cost Est. for Res. Bldg: 1 Mobile Home PLAIN Cls Fair Blt 0
(11) Heating System: Wall Furnace
Ground Area = 1080 SF Floor Area = 1080 SF.
Phy/Ab.Phy/Func/Econ/Comb. % Good=48/100/100/100/48
Building Areas

Type	Ext. Walls	Roof/Fnd.	Size	Cost New	Depr. Cost
Main Home	Siding	Comp.Shingle	1080		
			Total:	66,100	31,728
Other Additions/Adjustments					
42" frost-free footings, foundation			134	7,479	3,590
Plumbing					
3 Fixture Bath			1	2,745	1,318
Water/Sewer					
1000 Gal Septic			1	4,582	2,199
Water Well, 100 Feet			1	5,680	2,726
Deck					
Treated Wood			64	1,994	957
Treated Wood			6	270	130
			Totals:	88,850	42,648

Notes:
ECF (RESIDENTIAL) 1.297 => TCV: 55,314

*** Information herein deemed reliable but not guaranteed***

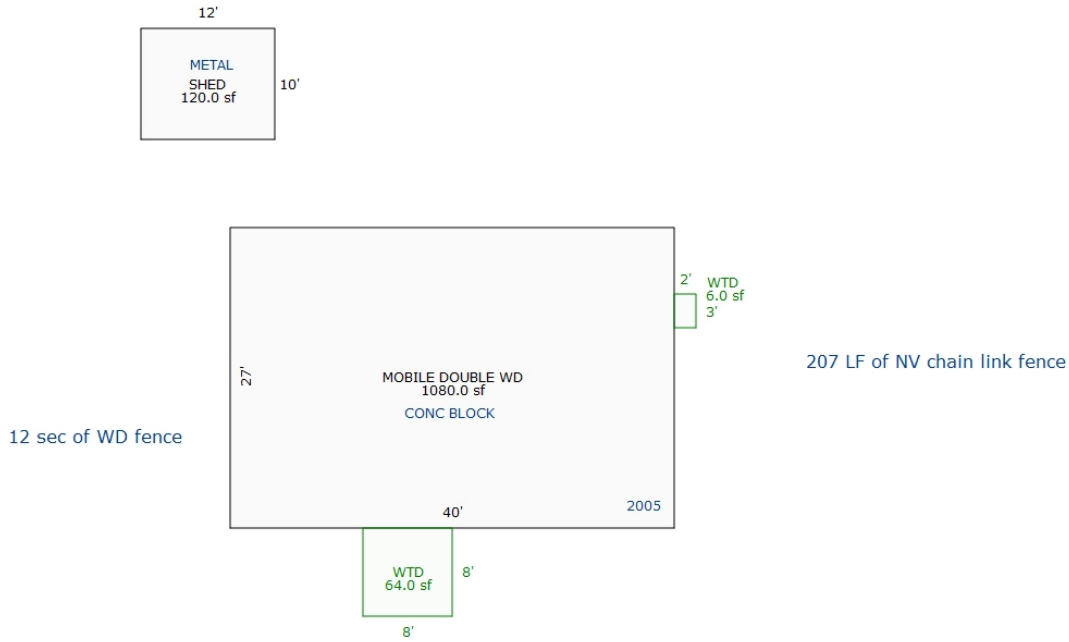

Sketch by Apex Sketch

*** Information herein deemed reliable but not guaranteed***

Parcel Number: 2410-35-2205 Jurisdiction: GREENWOOD TWP County: WEXFORD Printed on 02/15/2024

Grantor	Grantee	Sale Price	Sale Date	Inst. Type	Terms of Sale	Liber & Page	Verified By	Prcnt. Trans.
PARYANI, KISHAN CHAND	JOHNSON, DREW A	6,900	07/15/2016	LC	03-ARM'S LENGTH	6782/18	DEED	100.0
PARRYANI, PREM & MOLLY	PARYANI, KISHAN CHAND	0	07/15/2016	QC	21-NOT USED/OTHER	6772/17	DEED	0.0
JANES, WILLIAM S & LISA S	PARYANI, KISHAN CHAND	10,500	01/20/2016	WD	03-ARM'S LENGTH	676/2232	DEED	0.0
CUSENZA, FRANCESCO & JACQU	HENDRY, REX & AMY	9,900	05/08/2001	LC	03-ARM'S LENGTH	380:800	DEED	0.0

Property Address

Owner's Name/Address

JOHNSON, DREW A
4490 M 65
OSCODA MI 48750

Tax Description

PAR C, COM AT NW COR OF SEC; E 320.1 FT TO POB: S 317.2 FT; E 320.35 FT; N 317.35 FT; W 320.1 FT TO POB. 2.332 A M/L GW SEC 35 T24N R10W -MANTON- [[ASSESSED W/ 35-2202 '00

Comments/Influences

Class: RESIDENTIAL-VACANT Zoning:

School: MANTON CONSOLIDATED SCHOOLS

P.R.E. 0%

:

2024 Est TCV 11,591

Building Permit(s)	Date	Number	Status
RESIDENTIAL - REMODEL	05/09/2001	PB10251	

	Improved	X	Vacant

	Public Improvements
X	Dirt Road
X	Gravel Road
	Paved Road
	Storm Sewer
	Sidewalk
	Water
	Sewer
X	Electric
	Gas
	Curb
	Street Lights
	Standard Utilities
	Underground Utils.

	Topography of Site
X	Level
X	Rolling
	Low
	High
	Landscaped
	Swamp
	Wooded
	Pond
	Waterfront
	Ravine
	Wetland
	Flood Plain
X	OPEN

Who	When	What
GLA	05/11/2020	INSPECTION
GLA	07/10/2019	INSPECTION
GLA	07/10/2019	INSPECTION

Land Value Estimates for Land Table 4010.LAND VALUES

Description	Frontage	Depth	* Factors * Front	Depth	Rate	%Adj.	Reason	Value
	317.00	320.00	1.0000	0.0000	0	100*		0
ACREAGE			2.090 Acres		5,546	100		11,591
ROW			0.243 Acres		0	100		0

* denotes lines that do not contribute to the total acreage calculation.

317 Actual Front Feet, 2.33 Total Acres Total Est. Land Value = 11,591

Year	Land Value	Building Value	Assessed Value	Board of Review	Tribunal/ Other	Taxable Value
2024	5,800	0	5,800			4,847C
2023	5,700	0	5,700			4,617C
2022	4,700	0	4,700			4,398C
2021	4,900	0	4,900			4,258C

The Equalizer. Copyright (c) 1999 - 2009.
Licensed To: Township of Greenwood, County of Wexford, Michigan

*** Information herein deemed reliable but not guaranteed***

Parcel Number: 2410-35-2206 Jurisdiction: GREENWOOD TWP County: WEXFORD Printed on 02/15/2024

Grantor	Grantee	Sale Price	Sale Date	Inst. Type	Terms of Sale	Liber & Page	Verified By	Prcnt. Trans.
HART, MICHAEL F II	NEIHARDT BRIAN S & APRIL F	15,000	12/05/2023	WD	21-NOT USED/OTHER	696-1557	PROPERTY TRANSFER	100.0
HART, SUMMER LYNN	HART, MICHAEL F II	0	05/18/2009	QC	09-FAMILY	621/88	DEED	0.0
HART, MICHAEL F II	HART, MICHAEL F II & SUMME	0	04/05/2006	QC	09-FAMILY	585/1886	DEED	0.0
CUSENZA, FRANCESCO & JACQU	HART, MICHAEL F II	8,500	09/08/2001	WD	03-ARM'S LENGTH	383:951	DEED	0.0

Property Address

6946 N 33 RD

Owner's Name/Address

NEIHARDT BRIAN S & APRIL R
11866 E 12 RD
MANTON MI 49663

Tax Description

PAR D, BEG AT NW COR OF SEC: E 320.1 FT; S 317.2 FT; W 320.35 FT; N 317.06 FT TO POB. 2.331 A M/L GW SEC 35 T24N R10W -MANTON- [[ASSESSED W/ 35-2202 '00

Comments/Influences

The Equalizer. Copyright (c) 1999 - 2009. Licensed To: Township of Greenwood, County of Wexford, Michigan

Class: RESIDENTIAL-IMPROV Zoning:

School: MANTON CONSOLIDATED SCHOOLS

P.R.E. 0%

:

2024 Est TCV 31,848 TCV/TFA: 26.19

Building Permit(s)	Date	Number	Status
MOBILE HOME	07/30/2002	PP2701	
RESIDENTIAL - REMODEL	12/12/2001	PM5599	
MOBILE HOME	10/08/2001	PE14032	
RESIDENTIAL - REMODEL	09/26/2001	PB10598	

X	Improved		Vacant

	Public Improvements
	Dirt Road
X	Gravel Road
	Paved Road
	Storm Sewer
	Sidewalk
	Water
	Sewer
X	Electric
	Gas
	Curb
	Street Lights
	Standard Utilities
	Underground Utils.

	Topography of Site
	Level
X	Rolling
	Low
	High
	Landscaped
	Swamp
	Wooded
	Pond
	Waterfront
	Ravine
	Wetland
	Flood Plain
X	OPEN

Who	When	What
GLA	05/11/2020	INSPECTION
GLA	07/10/2019	INSPECTION
GLA	07/10/2019	INSPECTION

Land Value Estimates for Land Table 4010.LAND VALUES

Description	Frontage	Depth	* Factors * Front	Depth	Rate	%Adj.	Reason	Value
ACREAGE			1.848 Acres		6,880	100		12,715
ROW			0.483 Acres		0	100		0
			2.33 Total Acres		Total Est. Land Value =			12,715

Land Improvement Cost Estimates

Description	Rate	Size	% Good	Cash Value
Metal Prefab	14.98	130	31	604
Total Estimated Land Improvements True Cash Value =				604

Year	Land Value	Building Value	Assessed Value	Board of Review	Tribunal/ Other	Taxable Value
2024	6,400	9,500	15,900			15,900S
2023	5,200	30,100	35,300			27,905C
2022	4,300	26,000	30,300			26,577C
2021	4,800	23,100	27,900			25,728C

*** Information herein deemed reliable but not guaranteed***

Building Type

	Single Family
X	Mobile Home
	Town Home
	Duplex
	A-Frame

X	Wood Frame

Building Style: SWT/DWT

Yr Built	Remodeled
0	0

Condition: Very Poor

Room List

	Basement
	1st Floor
	2nd Floor
	Bedrooms

(1) Exterior

	Wood/Shingle
X	Aluminum/Vinyl
	Brick
X	Insulation

(2) Windows

	Many		Large
X	Avg.	X	Avg.
	Few		Small

	Wood Sash
	Metal Sash
X	Vinyl Sash
	Double Hung
	Horiz. Slide
	Casement
	Double Glass
	Patio Doors
X	Storms & Screens

(3) Roof

X	Gable		Gambrel
	Hip		Mansard
	Flat		Shed

X	Asphalt Shingle

Chimney:

(3) Roof (cont.)

	Eavestrough
X	Insulation
0	Front Overhang
0	Other Overhang

(4) Interior

X	Drywall		Plaster
	Paneled		Wood T&G

Trim & Decoration

	Ex	X	Ord		Min

Size of Closets

	Lg	X	Ord		Small

Doors:		Solid	X	H.C.	

(5) Floors

Kitchen:
Other: Linoleum
Other: Carpeted

(6) Ceilings

X	Drywall		

(7) Excavation

Basement: 0 S.F.
Crawl: 0 S.F.
Slab: 0 S.F.
Height to Joists: 0.0

(8) Basement

	Conc. Block
	Poured Conc.
	Stone
	Treated Wood
	Concrete Floor

(9) Basement Finish

	Recreation SF
	Living SF
	Walkout Doors (B)
	No Floor SF
	Walkout Doors (A)

(10) Floor Support

Joists:
Unsupported Len:
Cntr.Sup:

(11) Heating/Cooling

X	Gas		Oil		Elec.
	Wood		Coal		Steam

X	Forced Warm Air
	Wall Furnace
	Warm & Cool Air
	Heat Pump

	Central Air
	Wood Furnace

(12) Electric

150	Amps Service

No./Qual. of Fixtures

	Ex.	X	Ord.		Min

No. of Elec. Outlets

	Many	X	Ave.		Few

(13) Plumbing

	Average Fixture(s)
2	3 Fixture Bath
	2 Fixture Bath
	Softener, Auto
	Softener, Manual
	Solar Water Heat
	No Plumbing
	Extra Toilet
	Extra Sink
	Separate Shower
	Ceramic Tile Floor
	Ceramic Tile Wains
	Ceramic Tub Alcove
	Vent Fan

(14) Water/Sewer

	Public Water
	Public Sewer
1	Water Well
1	1000 Gal Septic
	2000 Gal Septic

Lump Sum Items:

(15) Built-ins

	Appliance Allow.
	Cook Top
	Dishwasher
	Garbage Disposal
	Bath Heater
	Vent Fan
	Hot Tub
	Unvented Hood
	Vented Hood
	Intercom
	Jacuzzi Tub
	Jacuzzi repl.Tub
	Oven
	Microwave
	Standard Range
	Self Clean Range
	Sauna
	Trash Compactor
	Central Vacuum
	Security System

(15) Fireplaces

	Interior 1 Story
	Interior 2 Story
	2nd/Same Stack
	Two Sided
	Exterior 1 Story
	Exterior 2 Story
	Prefab 1 Story
	Prefab 2 Story
	Heat Circulator
	Raised Hearth
	Wood Stove
	Direct-Vented Gas

Class: Fair
Effec. Age: 40
Floor Area:
Total Base New : 81,643 E.C.F.
Total Depr Cost: 14,286 X 1.297
Estimated T.C.V: 18,529

(16) Porches/Decks

Area	Type
96	WPP
120	WPP

(17) Garage

Year Built:
Car Capacity:
Class:
Exterior:
Brick Ven.:
Stone Ven.:
Common Wall:
Foundation:
Finished ?:
Auto. Doors:
Mech. Doors:
Area:
% Good:
Storage Area:
No Conc. Floor:

Bsmnt Garage:

Carport Area:
Roof:

Cost Est. for Res. Bldg: 1 Mobile Home SWT/DWT Cls Fair Blt 0
(11) Heating System: Forced Warm Air
Ground Area = 1216 SF Floor Area = 1216 SF.
Phy/Ab.Phy/Func/Econ/Comb. % Good=35/50/100/100/17.5
Building Areas

Type	Ext. Walls	Roof/Fnd.	Size	Cost New	Depr. Cost
Main Home	Siding	Comp.Shingle	1216		
			Total:	60,998	10,674
Other Additions/Adjustments					
Skirting, Metal or Vinyl, Vertical			184	2,052	359
Plumbing					
3 Fixture Bath			1	2,745	480
Water/Sewer					
1000 Gal Septic			1	4,582	802
Water Well, 100 Feet			1	5,680	994
Porches					
WPP			96	2,590	453
WPP			120	2,996	524
			Totals:	81,643	14,286

Notes:
ECF (RESIDENTIAL) 1.297 => TCV: 18,529

*** Information herein deemed reliable but not guaranteed***

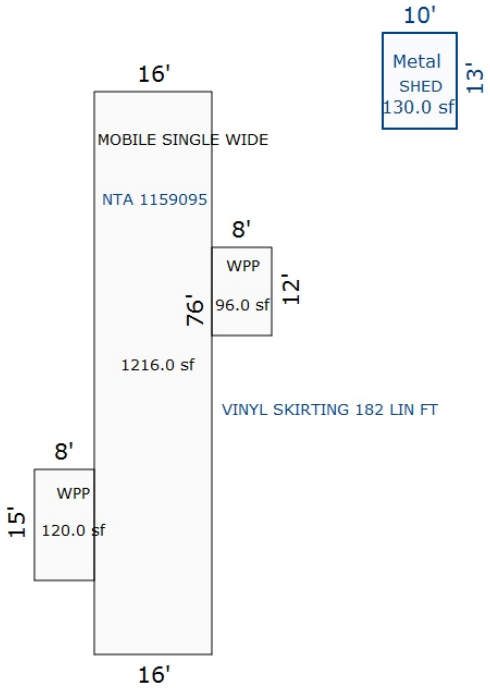

Sketch by Apex Sketch

*** Information herein deemed reliable but not guaranteed***

Parcel Number: 2410-35-2207 Jurisdiction: GREENWOOD TWP County: WEXFORD Printed on 02/15/2024

Grantor	Grantee	Sale Price	Sale Date	Inst. Type	Terms of Sale	Liber & Page	Verified By	Prcnt. Trans.
PERRO, DELWIN F	WEXFORD COUNTY	42,000	04/27/2018	QC	03-ARM'S LENGTH	682 /1724	DEED	100.0
BUMP, DONALD & JANA	PERRO, DELWIN & PATRICIA	20,000	08/09/2002	WD	03-ARM'S LENGTH	435:511	DEED	0.0
CUSENZA, FRANCESCO & JACQU	BUMP, DONALD & JANA	17,000	08/07/2002	WD	08-ESTATE	435:509	DEED	0.0

Property Address

Owner's Name/Address

WEXFORD COUNTY
BOARD OF COUNTY ROAD COMMISIONERS
P O BOX 163
LAKE MI 48632

Tax Description

PAR F, COM AT NW COR OF SEC; S 656.91 FT TO POB: E 1282.48 FT; S 339.83 FT; W 1283.56 FT; N 339.83 FT TO POB. -10 A M/L GW SEC 35 T24N R10W -MANTON- [[ASSESSED W/ 35-2202 '00

Comments/Influences

Default Comments

The Equalizer. Copyright (c) 1999 - 2009. Licensed To: Township of Greenwood, County of Wexford, Michigan

Class: COMMERCIAL-VACANT Zoning:

School: MANTON CONSOLIDATED SCHOOLS

P.R.E. 0%

:

2024 Est TCV 0

Building Permit(s)	Date	Number	Status

	Improved	X	Vacant

	Public Improvements
X	Dirt Road
X	Gravel Road
	Paved Road
	Storm Sewer
	Sidewalk
	Water
	Sewer
X	Electric
	Gas
	Curb
	Street Lights
	Standard Utilities
	Underground Utils.

	Topography of Site
X	Level
	Rolling
	Low
	High
	Landscaped
	Swamp
	Wooded
	Pond
	Waterfront
	Ravine
	Wetland
	Flood Plain
X	OPEN

Who	When	What
GLA	05/11/2020	INSPECTION
GLA	07/10/2019	INSPECTION
GLA	07/10/2019	INSPECTION

Land Value Estimates for Land Table 4010.LAND VALUES

Description	Frontage	Depth	* Factors * Front	Depth	Rate	%Adj.	Reason	Value
ACREAGE			9.750	Acres	4,664	100		45,470
ROW			0.250	Acres	0	100		0
			10.00	Total Acres	Total Est. Land Value =			45,470

Year	Land Value	Building Value	Assessed Value	Board of Review	Tribunal/ Other	Taxable Value
2024	EXEMPT	EXEMPT	EXEMPT			EXEMPT
2023	EXEMPT	EXEMPT	EXEMPT			EXEMPT
2022	0	0	0			0
2021	0	0	0			0

*** Information herein deemed reliable but not guaranteed***

Parcel Number: 2410-35-2301 Jurisdiction: GREENWOOD TWP County: WEXFORD Printed on 02/15/2024

Grantor	Grantee	Sale Price	Sale Date	Inst. Type	Terms of Sale	Liber & Page	Verified By	Prcnt. Trans.

Property Address	Class: COMMERCIAL-VACANT	Zoning:	Building Permit(s)	Date	Number	Status
	School: MANTON CONSOLIDATED SCHOOLS					
Owner's Name/Address	P.R.E. 0%					
	:					
WEXFORD COUNTY ROAD COMMISSION P.O. BOX 34 BOON MI 49618-0034	2024 Est TCV 0					

Improved | X | Vacant

Land Value Estimates for Land Table 4010.LAND VALUES

Description	Frontage	Depth	* Factors * Front	Depth	Rate	%Adj.	Reason	Value
ACREAGE			9.000 Acres		4,759	100		42,828
			1.000 Acres		0	100		0
			10.00 Total Acres		Total Est. Land Value =			42,828

Tax Description

SW 1/4 OF SW 1/4 OF NW 1/4 10 A. GW. SEC. 35 T24N R10W -MANTON-

Comments/Influences

	Public Improvements
	Dirt Road
X	Gravel Road
	Paved Road
	Storm Sewer
	Sidewalk
	Water
	Sewer
X	Electric
	Gas
	Curb
	Street Lights
	Standard Utilities
	Underground Utils.

	Topography of Site
X	Level
X	Rolling
	Low
	High
	Landscaped
	Swamp
X	Wooded
	Pond
	Waterfront
	Ravine
	Wetland
	Flood Plain
X	OPEN/PINES

Who	When	What
GLA	05/11/2020	INSPECTION
GLA	07/10/2019	INSPECTION
GLA	07/10/2019	INSPECTION

Year	Land Value	Building Value	Assessed Value	Board of Review	Tribunal/ Other	Taxable Value
2024	EXEMPT	EXEMPT	EXEMPT			EXEMPT
2023	EXEMPT	EXEMPT	EXEMPT			EXEMPT
2022	0	0	0			0
2021	0	0	0			0

The Equalizer. Copyright (c) 1999 - 2009.
Licensed To: Township of Greenwood, County of Wexford, Michigan

*** Information herein deemed reliable but not guaranteed***

Parcel Number: 2410-35-2302 Jurisdiction: GREENWOOD TWP County: WEXFORD Printed on 02/15/2024

Grantor	Grantee	Sale Price	Sale Date	Inst. Type	Terms of Sale	Liber & Page	Verified By	Prcnt. Trans.
CULVER, LINA M		0	09/05/2012	OTH	21-NOT USED/OTHER	651/2616	DEED	100.0
CULVER, LINA M	CULVER, LINA M LE ETAL	0	04/13/2011	QC	18-LIFE ESTATE	638/2157	DEED	0.0
CULVER, LINA M	CULVER, LINA M LE & GARY I	0	10/07/2010	QC	18-LIFE ESTATE	633/2327	DEED	0.0

Property Address

4317 E 12 1/2 RD

Owner's Name/Address

GREGORY, JOANN CULVER
9620 MIDDLE WARREN RD
PINE BLUFF AR 71603

Tax Description

S 1/2 OF NW 1/4 EXC SW 1/4 OF SW 1/4 OF NW 1/4 & EXC E 15 RDS OF S 40 RDS. 66.25 A. M/L GW. SEC. 35 T24N R10W -MANTON-

Comments/Influences

Class: AGRICULTURAL-IMPRO Zoning:

School: MANTON CONSOLIDATED SCHOOLS

P.R.E. 100% 03/22/2012 Qual. Ag.

:

2024 Est TCV 175,109

Building Permit(s)	Date	Number	Status

X Improved | Vacant

	Public Improvements
	Dirt Road
X	Gravel Road
	Paved Road
	Storm Sewer
	Sidewalk
	Water
	Sewer
X	Electric
	Gas
	Curb
	Street Lights
	Standard Utilities
	Underground Utils.

	Topography of Site
X	Level
	Rolling
	Low
	High
	Landscaped
	Swamp
	Wooded
	Pond
	Waterfront
	Ravine
	Wetland
	Flood Plain
X	OPEN

Who	When	What
GLA	05/13/2021	INSPECTION
GLA	07/10/2019	INSPECTION
GLA	07/10/2019	INSPECTION

Land Value Estimates for Land Table 1010.AG

Description	Frontage	Depth	* Factors * Front	Depth	Rate	%Adj.	Reason	Value
AG LAND	60 ACRES		64.25 Acres		2690	100		172,833
AG LAND	ROW		2.00 Acres		0	100		0
			66.25 Total Acres		Total Est. Land Value =			172,833

The Equalizer. Copyright (c) 1999 - 2009.
Licensed To: Township of Greenwood, County of Wexford, Michigan

Year	Land Value	Building Value	Assessed Value	Board of Review	Tribunal/ Other	Taxable Value
2024	86,400	1,200	87,600			54,706C
2023	64,300	1,000	65,300			52,101C
2022	57,800	900	58,700			49,620C
2021	54,600	1,100	55,700			48,035C

*** Information herein deemed reliable but not guaranteed***

Building Type	Barn - General Purpose				
Year Built					
Class/Construction	D,Pole				
Quality/Exterior	Low Cost				
# of Walls, Perimeter	4 Wall, 162				
Height	24				
Heating System	No Heating/Cooling				
Length/Width/Area	45 x 36 = 1620				
Cost New	$ 43,108				
Phy./Func./Econ. %Good	62/30/100 18.6				
Depreciated Cost	$ 2,405				
+ Unit-In-Place Items	$ 0				
Description, Size X Rate X %Good = Cost Itemized ->\ Unit-In-Place ->\ Items ->\					
E.C.F.	X 0.946				
% Good	62				
Est. True Cash Value	$ 2,276				
Comments:					
Total Estimated True Cash Value of Agricultural Improvements / This Card: 2276 / All Cards: 2276					

*** Information herein deemed reliable but not guaranteed***

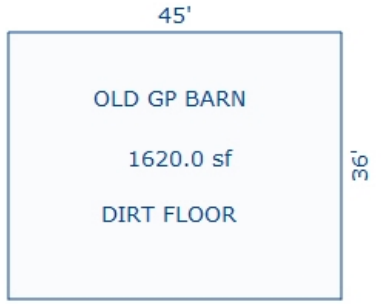

Sketch by Apex Sketch

*** Information herein deemed reliable but not guaranteed***

Parcel Number: 2410-35-2402 Jurisdiction: GREENWOOD TWP County: WEXFORD Printed on 02/15/2024

Grantor	Grantee	Sale Price	Sale Date	Inst. Type	Terms of Sale	Liber & Page	Verified By	Prcnt. Trans.
MOYER, GARY LEE & LYNN K	KRAMER KIMBERLY	57,000	05/26/2023	WD	03-ARM'S LENGTH	PTA	PROPERTY TRANSFER	100.0
LMB INVESTMENTS CORP	MOYER, GARY LEE & LYNN K	29,900	06/12/2019	WD	03-ARM'S LENGTH	6851/108	DEED	100.0
TRIPLETT, JANET M	LMB INVESTMENTS CORP	0	05/21/2019	QC	21-NOT USED/OTHER	685 /163	DEED	0.0
LMB INVESTMENTS CORP	TRIPLETT, JANET M	1	12/20/2017	WD	21-NOT USED/OTHER	681/1981	DEED	100.0

Property Address

E 12 1/2 RD

Owner's Name/Address

KRAMER KIMBERLY
3056 ZIMMERMAN RD
TRAVERSE CITY MI 49685

Tax Description

S 40 RDS OF E 15 RDS OF NW 1/4 3.75 A.
GW. SEC. 35 T24N R10W -MANTON-

Comments/Influences

Class: RESIDENTIAL-IMPROV Zoning:

School: MANTON CONSOLIDATED SCHOOLS

P.R.E. 0%

:

2024 Est TCV 21,569 TCV/TFA: 0.00

Building Permit(s)	Date	Number	Status

X	Improved		Vacant

	Public Improvements
X	Dirt Road
X	Gravel Road
	Paved Road
	Storm Sewer
	Sidewalk
	Water
	Sewer
X	Electric
	Gas
	Curb
	Street Lights
	Standard Utilities
	Underground Utils.

	Topography of Site
X	Level
X	Rolling
	Low
	High
	Landscaped
	Swamp
	Wooded
	Pond
	Waterfront
	Ravine
	Wetland
	Flood Plain
X	OPEN

Who	When	What
GLA	05/11/2020	INSPECTION
GLA	07/10/2019	INSPECTION
GLA	07/10/2019	INSPECTION

Land Value Estimates for Land Table 4010.LAND VALUES

Description	Frontage	Depth	* Factors * Front	Depth	Rate	%Adj.	Reason	Value
HELSEL RIV LOW	248.00	685.00	1.0000	0.0000	315	100*		0
ACREAGE			3.563 Acres		5,220	100		18,598
ROW			0.188 Acres		0	100		0

* denotes lines that do not contribute to the total acreage calculation.

248 Actual Front Feet, 3.75 Total Acres Total Est. Land Value = 18,598

Year	Land Value	Building Value	Assessed Value	Board of Review	Tribunal/ Other	Taxable Value
2024	9,300	1,500	10,800			10,800S
2023	8,400	1,300	9,700			7,917C
2022	6,800	1,200	8,000			7,540C
2021	7,500	1,300	8,800			7,300C

The Equalizer. Copyright (c) 1999 - 2009.
Licensed To: Township of Greenwood, County of Wexford, Michigan

*** Information herein deemed reliable but not guaranteed***

Building Type

X	Single Family
	Mobile Home
	Town Home
	Duplex
	A-Frame
X	Wood Frame

Building Style: PLAIN

Yr Built	Remodeled
0	0

Condition: Good

Room List

	Basement
	1st Floor
	2nd Floor
	Bedrooms

(1) Exterior

X	Wood/Shingle
	Aluminum/Vinyl
	Brick
X	Insulation

(2) Windows

X	Many Avg. Few	X	Large Avg. Small

	Wood Sash
	Metal Sash
X	Vinyl Sash
	Double Hung
	Horiz. Slide
	Casement
	Double Glass
	Patio Doors
X	Storms & Screens

(3) Roof

X	Gable		Gambrel
	Hip		Mansard
	Flat		Shed

X	Asphalt Shingle

Chimney:

(3) Roof (cont.)

	Eavestrough
X	Insulation
0	Front Overhang
0	Other Overhang

(4) Interior

X	Drywall		Plaster
	Paneled		Wood T&G

Trim & Decoration

	Ex	X	Ord		Min

Size of Closets

	Lg	X	Ord		Small

Doors:		Solid	X	H.C.	

(5) Floors

Kitchen:
Other: Linoleum
Other: Carpeted

(6) Ceilings

X	Drywall

(7) Excavation

Basement: 0 S.F.
Crawl: 0 S.F.
Slab: 0 S.F.
Height to Joists: 0.0

(8) Basement

	Conc. Block
	Poured Conc.
	Stone
	Treated Wood
	Concrete Floor

(9) Basement Finish

	Recreation SF
	Living SF
	Walkout Doors (B)
	No Floor SF
	Walkout Doors (A)

(10) Floor Support

Joists:
Unsupported Len:
Cntr.Sup:

(11) Heating/Cooling

X	Gas		Oil		Elec.
	Wood		Coal		Steam

	Forced Air w/o Ducts
X	Forced Air w/ Ducts
	Forced Hot Water
	Electric Baseboard
	Elec. Ceil. Radiant
	Radiant (in-floor)
	Electric Wall Heat
	Space Heater
	Wall/Floor Furnace
	Forced Heat & Cool
	Heat Pump
	No Heating/Cooling

	Central Air
	Wood Furnace

(12) Electric

150	Amps Service

No./Qual. of Fixtures

	Ex.	X	Ord.		Min

No. of Elec. Outlets

	Many	X	Ave.		Few

(13) Plumbing

1	Average Fixture(s)
	3 Fixture Bath
	2 Fixture Bath
	Softener, Auto
	Softener, Manual
	Solar Water Heat
	No Plumbing
	Extra Toilet
	Extra Sink
	Separate Shower
	Ceramic Tile Floor
	Ceramic Tile Wains
	Ceramic Tub Alcove
	Vent Fan

(14) Water/Sewer

	Public Water
	Public Sewer
	Water Well
	1000 Gal Septic
	2000 Gal Septic

Lump Sum Items:

(15) Built-ins

	Appliance Allow.
	Cook Top
	Dishwasher
	Garbage Disposal
	Bath Heater
	Vent Fan
	Hot Tub
	Unvented Hood
	Vented Hood
	Intercom
	Jacuzzi Tub
	Jacuzzi repl.Tub
	Oven
	Microwave
	Standard Range
	Self Clean Range
	Sauna
	Trash Compactor
	Central Vacuum
	Security System

(15) Fireplaces

	Interior 1 Story
	Interior 2 Story
	2nd/Same Stack
	Two Sided
	Exterior 1 Story
	Exterior 2 Story
	Prefab 1 Story
	Prefab 2 Story
	Heat Circulator
	Raised Hearth
	Wood Stove
	Direct-Vented Gas

Class: CD
Effec. Age: 19
Floor Area: 0
Total Base New : 4,493 E.C.F.
Total Depr Cost: 2,291 X 1.297
Estimated T.C.V: 2,971

(16) Porches/Decks

Area	Type

(17) Garage

Year Built:
Car Capacity:
Class:
Exterior:
Brick Ven.:
Stone Ven.:
Common Wall:
Foundation:
Finished ?:
Auto. Doors:
Mech. Doors:
Area:
% Good:
Storage Area:
No Conc. Floor:

Bsmnt Garage:

Carport Area:
Roof:

Cost Est. for Res. Bldg: 1 Single Family PLAIN Cls CD Blt 0
(11) Heating System: Forced Air w/ Ducts
Ground Area = 0 SF Floor Area = 0 SF.
Phy/Ab.Phy/Func/Econ/Comb. % Good=81/100/100/100/81
Building Areas

Stories	Exterior	Foundation	Size	Cost New	Depr. Cost	
Other Additions/Adjustments						
Local Cost Items						
SHED			192	1,498	614	*4
SHED #2			384	2,995	1,677	*5
			Totals:	4,493	2,291	

Notes:
ECF (RESIDENTIAL) 1.297 => TCV: 2,971

*** Information herein deemed reliable but not guaranteed***

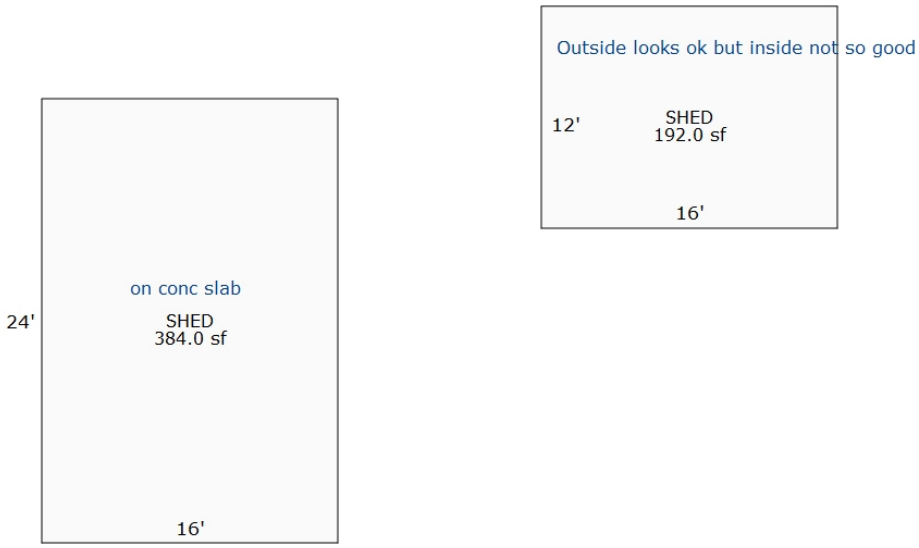

Sketch by Apex Sketch

*** Information herein deemed reliable but not guaranteed***

Parcel Number: 2410-35-3101 Jurisdiction: GREENWOOD TWP County: WEXFORD Printed on 02/15/2024

Grantor	Grantee	Sale Price	Sale Date	Inst. Type	Terms of Sale	Liber & Page	Verified By	Prcnt. Trans.

Property Address
4297 E 14 RD

Owner's Name/Address
HOOVER, ROBERT P. & JOAN L. 4297 E 14 RD MANTON MI 49663

Tax Description
E 1/2 OF SW 1/4 EXC W 14 1/2 RDS OF S 36 RDS; & EXC E 1/4 OF NE 1/4 OF SW 1/4 & N 1/2 OF SW 1/4 OF SE 1/4; & SE 1/4 OF SW 1/4 OF SE 1/4 -96.42 A M/L- GW. SEC. 35 T24N R10W -MANTON-

Comments/Influences

The Equalizer. Copyright (c) 1999 - 2009. Licensed To: Township of Greenwood, County of Wexford, Michigan

Class: RESIDENTIAL-IMPROV Zoning:

School: MANTON CONSOLIDATED SCHOOLS

P.R.E. 100% / /

:

2024 Est TCV 400,504 TCV/TFA: 166.53

Building Permit(s)	Date	Number	Status
RESIDENTIAL - REMODEL	12/01/2005	PM8812	

X	Improved		Vacant

	Public Improvements
	Dirt Road
X	Gravel Road
	Paved Road
	Storm Sewer
	Sidewalk
	Water
	Sewer
X	Electric
	Gas
	Curb
	Street Lights
	Standard Utilities
	Underground Utils.

	Topography of Site
X	Level
X	Rolling
	Low
	High
	Landscaped
	Swamp
X	Wooded
	Pond
	Waterfront
	Ravine
	Wetland
	Flood Plain
X	OPEN

Who	When	What
GLA	05/11/2020	INSPECTION
GLA	07/10/2019	INSPECTION
GLA	07/10/2019	INSPECTION

Land Value Estimates for Land Table 4010.LAND VALUES

Description	Frontage	Depth	* Factors * Front	Depth	Rate	%Adj.	Reason	Value
ACREAGE			94.420 Acres		2,494	100		235,512
ROW			2.000 Acres		0	100		0
			96.42 Total Acres		Total Est. Land Value =			235,512

Land Improvement Cost Estimates

Description	Rate	Size	% Good	Cash Value
D/W/P: 3.5 Concrete	5.82	44	45	115
Wood Frame	18.03	1512	12	3,271
Total Estimated Land Improvements True Cash Value =				3,386

Year	Land Value	Building Value	Assessed Value	Board of Review	Tribunal/ Other	Taxable Value
2024	117,800	82,500	200,300			60,008C
2023	92,400	66,700	159,100			57,151C
2022	80,300	55,800	136,100			54,430C
2021	71,400	55,700	127,100			52,692C

*** Information herein deemed reliable but not guaranteed***

Building Type

X	Single Family
	Mobile Home
	Town Home
	Duplex
	A-Frame
X	Wood Frame

Building Style: PLAIN

Yr Built	Remodeled
0	0

Condition: Good

Room List

	Basement
	1st Floor
	2nd Floor
	Bedrooms

(1) Exterior

X	Wood/Shingle
	Aluminum/Vinyl
	Brick
X	Insulation

(2) Windows

	Many		Large
X	Avg.	X	Avg.
	Few		Small

X	Wood Sash
	Metal Sash
	Vinyl Sash
	Double Hung
	Horiz. Slide
	Casement
	Double Glass
	Patio Doors
X	Storms & Screens

(3) Roof

X	Gable		Gambrel
	Hip		Mansard
	Flat		Shed
X	Asphalt Shingle		

Chimney:

(3) Roof (cont.)

	Eavestrough
X	Insulation
0	Front Overhang
0	Other Overhang

(4) Interior

X	Drywall		Plaster
	Paneled		Wood T&G

Trim & Decoration

	Ex	X	Ord		Min

Size of Closets

	Lg	X	Ord		Small

Doors:		Solid	X	H.C.	

(5) Floors

Kitchen:
Other: Linoleum
Other: Carpeted

(6) Ceilings

X	Drywall

(7) Excavation

Basement: 0 S.F.
Crawl: 1838 S.F.
Slab: 0 S.F.
Height to Joists: 0.0

(8) Basement

	Conc. Block
	Poured Conc.
	Stone
	Treated Wood
	Concrete Floor

(9) Basement Finish

	Recreation SF
	Living SF
	Walkout Doors (B)
	No Floor SF
	Walkout Doors (A)

(10) Floor Support

Joists:
Unsupported Len:
Cntr.Sup:

(11) Heating/Cooling

X	Gas		Oil		Elec.
	Wood		Coal		Steam

	Forced Air w/o Ducts
X	Forced Air w/ Ducts
	Forced Hot Water
	Electric Baseboard
	Elec. Ceil. Radiant
	Radiant (in-floor)
	Electric Wall Heat
	Space Heater
	Wall/Floor Furnace
	Forced Heat & Cool
	Heat Pump
	No Heating/Cooling
	Central Air
	Wood Furnace

(12) Electric

150	Amps Service

No./Qual. of Fixtures

	Ex.	X	Ord.		Min

No. of Elec. Outlets

	Many	X	Ave.		Few

(13) Plumbing

1	Average Fixture(s)
	3 Fixture Bath
	2 Fixture Bath
	Softener, Auto
	Softener, Manual
	Solar Water Heat
	No Plumbing
	Extra Toilet
	Extra Sink
	Separate Shower
	Ceramic Tile Floor
	Ceramic Tile Wains
	Ceramic Tub Alcove
	Vent Fan

(14) Water/Sewer

	Public Water
	Public Sewer
1	Water Well
1	1000 Gal Septic
	2000 Gal Septic

Lump Sum Items:

(15) Built-ins

	Appliance Allow.
	Cook Top
	Dishwasher
	Garbage Disposal
	Bath Heater
	Vent Fan
	Hot Tub
	Unvented Hood
	Vented Hood
	Intercom
	Jacuzzi Tub
	Jacuzzi repl.Tub
	Oven
	Microwave
	Standard Range
	Self Clean Range
	Sauna
	Trash Compactor
	Central Vacuum
	Security System

(15) Fireplaces

	Interior 1 Story
	Interior 2 Story
	2nd/Same Stack
	Two Sided
	Exterior 1 Story
	Exterior 2 Story
	Prefab 1 Story
	Prefab 2 Story
	Heat Circulator
	Raised Hearth
	Wood Stove
	Direct-Vented Gas

Class: D
Effec. Age: 64
Floor Area: 2,405
Total Base New : 278,830 E.C.F.
Total Depr Cost: 124,600 X 1.297
Estimated T.C.V: 161,606

(16) Porches/Decks

Area	Type
9	WPP
40	WGEP (1 Story)
100	WSEP (1 Story)
135	WPP
268	Treated Wood

(17) Garage

Year Built:
Car Capacity:
Class: D
Exterior: Pole
Brick Ven.: 0
Stone Ven.: 0
Common Wall: Detache
Foundation: 18 Inch
Finished ?:
Auto. Doors: 0
Mech. Doors: 0
Area: 1216
% Good: 0
Storage Area: 0
No Conc. Floor: 1216

Bsmnt Garage:

Carport Area: 240
Roof: Aluminum

Cost Est. for Res. Bldg: 1 Single Family PLAIN Cls D Blt 0
(11) Heating System: Forced Air w/ Ducts
Ground Area = 1838 SF Floor Area = 2405 SF.
Phy/Ab.Phy/Func/Econ/Comb. % Good=45/100/100/100/45
Building Areas

Stories	Exterior	Foundation	Size	Cost New	Depr. Cost	
1 Story	Siding	Crawl Space	171			
2 Story	Siding	Crawl Space	567			
1 Story	Siding	Crawl Space	1,100			
			Total:	218,900	98,504	
Other Additions/Adjustments						
Water/Sewer						
1000 Gal Septic			1	4,293	1,932	
Water Well, 100 Feet			1	5,545	2,495	
Porches						
WGEP (1 Story)			40	4,732	2,129	
WSEP (1 Story)			100	4,817	2,168	
WPP			135	2,890	1,300	
WPP			9	427	192	
Deck						
Treated Wood			268	4,832	2,174	
Garages						
Class: D Exterior: Pole (Unfinished)						
Base Cost			572	12,830	5,773	
Class: D Exterior: Pole (Unfinished)						
Base Cost			1216	23,384	10,523	
No Concrete Floor			1216	-6,822	-3,070	
Carports						
Aluminum			240	3,002	480	*1
			Totals:	278,830	124,600	

<<<<< Calculations too long. See Valuation printout for complete pricing. >>>>>

*** Information herein deemed reliable but not guaranteed***

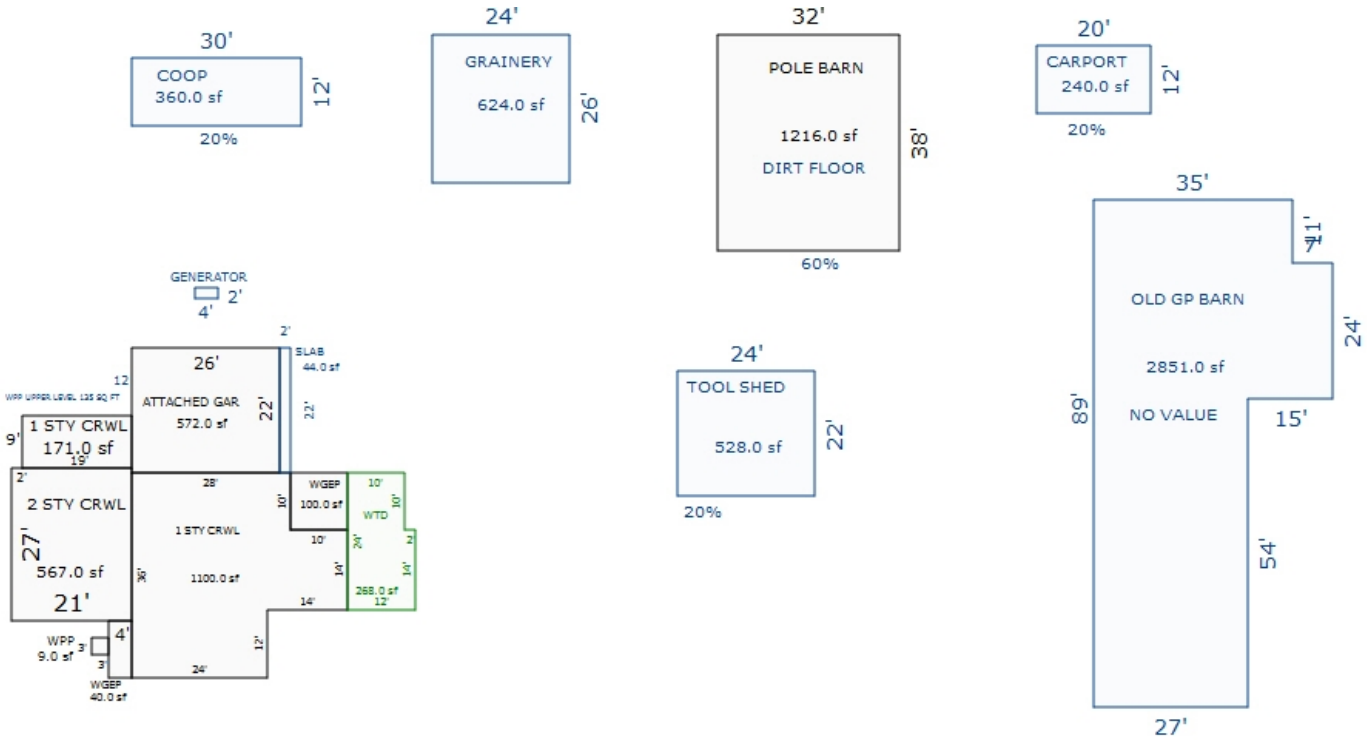

Sketch by Apex Sketch

*** Information herein deemed reliable but not guaranteed***

Parcel Number: 2410-35-3102 Jurisdiction: GREENWOOD TWP County: WEXFORD Printed on 02/15/2024

Grantor	Grantee	Sale Price	Sale Date	Inst. Type	Terms of Sale	Liber & Page	Verified By	Prcnt. Trans.

Property Address
4488 E 12 1/2 RD

Owner's Name/Address
PETERSON, STEVEN V. 4488 E 12 1/2 RD MANTON MI 49663

Tax Description
E 1/4 OF NE 1/4 OF SW 1/4 --9.82 A M/L--GW. SEC. 35 T24N R10W -MANTON-

Comments/Influences

The Equalizer. Copyright (c) 1999 - 2009.
Licensed To: Township of Greenwood, County of Wexford, Michigan

Class: RESIDENTIAL-IMPROV Zoning:

School: MANTON CONSOLIDATED SCHOOLS

P.R.E. 100% / /

:

2024 Est TCV 300,642 TCV/TFA: 125.06

Building Permit(s)	Date	Number	Status

X	Improved		Vacant

	Public Improvements
	Dirt Road
X	Gravel Road
	Paved Road
	Storm Sewer
	Sidewalk
	Water
	Sewer
X	Electric
	Gas
	Curb
	Street Lights
	Standard Utilities
	Underground Utils.

	Topography of Site
X	Level
	Rolling
	Low
	High
	Landscaped
X	Swamp
X	Wooded
	Pond
	Waterfront
	Ravine
	Wetland
	Flood Plain
X	OPEN/PINES

Who	When	What
GLA	05/11/2020	INSPECTION
GLA	07/10/2019	INSPECTION
GLA	07/10/2019	INSPECTION

Land Value Estimates for Land Table 4010.LAND VALUES

Description	Frontage	Depth	* Factors * Front	Depth	Rate	%Adj.	Reason	Value
ACREAGE			9.580 Acres		4,684	100		44,871
ROW			0.240 Acres		0	100		0
			9.82 Total Acres		Total Est. Land Value =			44,871

Land Improvement Cost Estimates

Description	Rate	Size	% Good	Cash Value
D/W/P: 3.5 Concrete	6.63	18	70	83
Wood Frame	22.73	401	46	4,193
Total Estimated Land Improvements True Cash Value =				4,276

Year	Land Value	Building Value	Assessed Value	Board of Review	Tribunal/ Other	Taxable Value
2024	22,400	127,900	150,300			77,135C
2023	12,800	104,900	117,700			73,462C
2022	11,800	88,900	100,700			69,964C
2021	12,000	90,000	102,000			67,729C

*** Information herein deemed reliable but not guaranteed***

Building Type

X	Single Family
	Mobile Home
	Town Home
	Duplex
	A-Frame
X	Wood Frame

Building Style: PLAIN

Yr Built	Remodeled
1994	0

Condition: Good

Room List

	Basement
	1st Floor
	2nd Floor
	Bedrooms

(1) Exterior

	Wood/Shingle
X	Aluminum/Vinyl
	Brick
X	Insulation

(2) Windows

X	Many		Large
	Avg.	X	Avg.
	Few		Small

	Wood Sash
	Metal Sash
X	Vinyl Sash
	Double Hung
	Horiz. Slide
	Casement
	Double Glass
	Patio Doors
X	Storms & Screens

(3) Roof

X	Gable		Gambrel
	Hip		Mansard
	Flat		Shed

X	Asphalt Shingle

Chimney:

(3) Roof (cont.)

	Eavestrough
X	Insulation
0	Front Overhang
0	Other Overhang

(4) Interior

X	Drywall		Plaster
	Paneled		Wood T&G

Trim & Decoration

	Ex	X	Ord		Min

Size of Closets

	Lg	X	Ord		Small

Doors:		Solid	X	H.C.	

(5) Floors

Kitchen:
Other: Linoleum
Other: Carpeted

(6) Ceilings

X	Drywall		

(7) Excavation

Basement: 864 S.F.
Crawl: 0 S.F.
Slab: 1540 S.F.
Height to Joists: 0.0

(8) Basement

	Conc. Block
	Poured Conc.
	Stone
	Treated Wood
	Concrete Floor

(9) Basement Finish

	Recreation	SF
	Living	SF
	Walkout Doors (B)	
	No Floor	SF
	Walkout Doors (A)	

(10) Floor Support

Joists:
Unsupported Len:
Cntr.Sup:

(11) Heating/Cooling

X	Gas		Oil		Elec.
	Wood		Coal		Steam

	Forced Air w/o Ducts
X	Forced Air w/ Ducts
	Forced Hot Water
	Electric Baseboard
	Elec. Ceil. Radiant
	Radiant (in-floor)
	Electric Wall Heat
	Space Heater
	Wall/Floor Furnace
	Forced Heat & Cool
	Heat Pump
	No Heating/Cooling

	Central Air
	Wood Furnace

(12) Electric

150	Amps Service

No./Qual. of Fixtures

	Ex.	X	Ord.		Min

No. of Elec. Outlets

	Many	X	Ave.		Few

(13) Plumbing

1	Average Fixture(s)
	3 Fixture Bath
	2 Fixture Bath
	Softener, Auto
	Softener, Manual
	Solar Water Heat
	No Plumbing
	Extra Toilet
	Extra Sink
	Separate Shower
	Ceramic Tile Floor
	Ceramic Tile Wains
	Ceramic Tub Alcove
	Vent Fan

(14) Water/Sewer

	Public Water
	Public Sewer
1	Water Well
1	1000 Gal Septic
	2000 Gal Septic

Lump Sum Items:

(15) Built-ins

	Appliance Allow.
	Cook Top
	Dishwasher
	Garbage Disposal
	Bath Heater
	Vent Fan
	Hot Tub
	Unvented Hood
	Vented Hood
	Intercom
	Jacuzzi Tub
	Jacuzzi repl.Tub
	Oven
	Microwave
	Standard Range
	Self Clean Range
	Sauna
	Trash Compactor
	Central Vacuum
	Security System

(15) Fireplaces

	Interior 1 Story
	Interior 2 Story
	2nd/Same Stack
	Two Sided
	Exterior 1 Story
	Exterior 2 Story
	Prefab 1 Story
	Prefab 2 Story
	Heat Circulator
	Raised Hearth
	Wood Stove
	Direct-Vented Gas

Class: CD
Effec. Age: 39
Floor Area: 2,404
Total Base New : 317,879 E.C.F.
Total Depr Cost: 193,905 X 1.297
Estimated T.C.V: 251,495

(16) Porches/Decks

Area	Type
360	WPP

(17) Garage

Year Built:
Car Capacity:
Class: CD
Exterior: Pole
Brick Ven.: 0
Stone Ven.: 0
Common Wall: Detache
Foundation: 18 Inch
Finished ?:
Auto. Doors: 0
Mech. Doors: 0
Area: 1836
% Good: 0
Storage Area: 0
No Conc. Floor: 0

Bsmnt Garage:

Carport Area:
Roof:

Cost Est. for Res. Bldg: 1 Single Family PLAIN Cls CD Blt 1994
(11) Heating System: Forced Air w/ Ducts
Ground Area = 2404 SF Floor Area = 2404 SF.
Phy/Ab.Phy/Func/Econ/Comb. % Good=61/100/100/100/61

Building Areas

Stories	Exterior	Foundation	Size	Cost New	Depr. Cost
1 Story	Siding	Basement	864		
1 Story	Siding	Slab	480		
1 Story	Siding	Slab	360		
1 Story	Siding	Slab	700		
			Total:	262,298	160,001
Other Additions/Adjustments					
Water/Sewer					
1000 Gal Septic			1	4,582	2,795
Water Well, 100 Feet			1	5,680	3,465
Porches					
WPP			360	5,386	3,285
Garages					
Class: CD Exterior: Pole (Unfinished)					
Base Cost			1836	39,933	24,359
			Totals:	317,879	193,905

Notes:

ECF (RESIDENTIAL) 1.297 => TCV: 251,495

*** Information herein deemed reliable but not guaranteed***

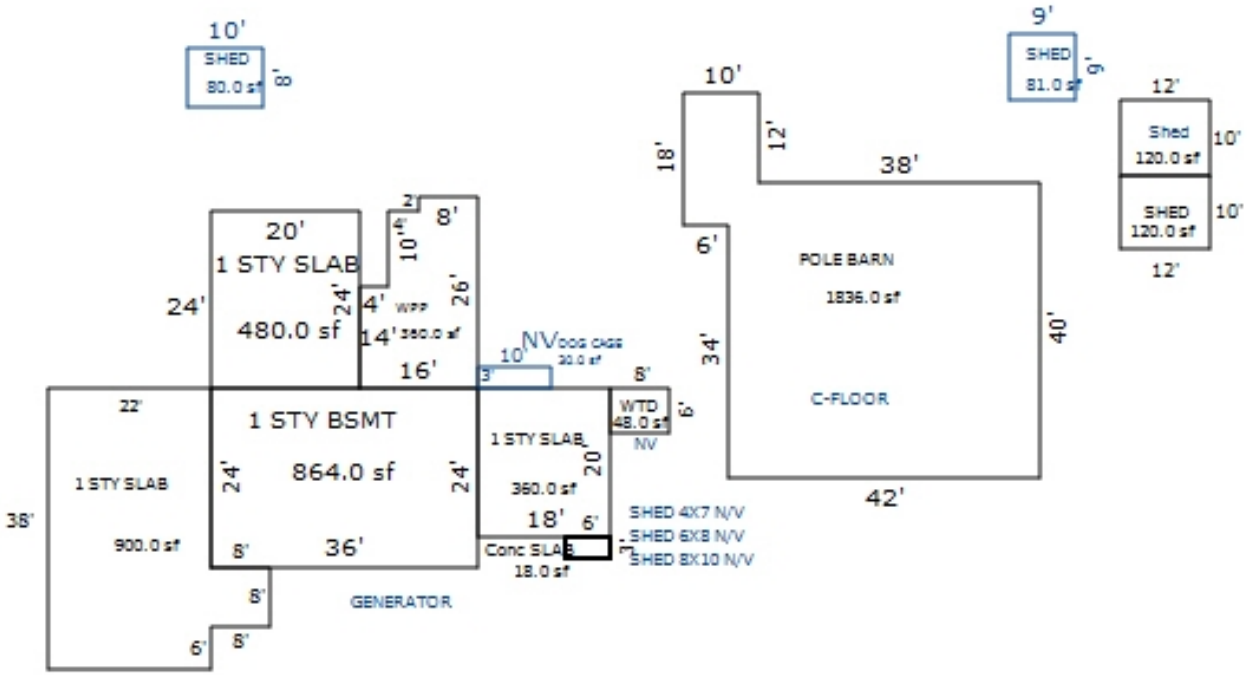

Sketch by Apex Sketch

*** Information herein deemed reliable but not guaranteed***

Parcel Number: 2410-35-3202 Jurisdiction: GREENWOOD TWP County: WEXFORD Printed on 02/15/2024

Grantor	Grantee	Sale Price	Sale Date	Inst. Type	Terms of Sale	Liber & Page	Verified By	Prcnt. Trans.
BROOKS, JOHN W & DIANE R	THOMAS, MASON	172,500	08/03/2015	WD	03-ARM'S LENGTH	675/2738	DEED	100.0
BROOKS, JOHN W & DIANE R W	BROOKS, JOHN W & DIANE R	0	02/13/2009	QC	09-FAMILY	618/1712	DEED	0.0
LABARRE, RICHARD & JODY	BROOKS, JOHN & DIANE WORM	180,000	07/12/2005	WD	03-ARM'S LENGTH	575:1029	DEED	0.0

Property Address

4170 E 12 1/2 RD

Owner's Name/Address

THOMAS, MASON
4170 E 12 1/2 RD
MANTON MI 49663

Tax Description

PAR C; COM AT W 1/4 COR OF SEC; E 644.36 FT TO POB: E 644.36 FT; S 1323.24 FT; W 647.1 FT; N 1322.52 FT TO POB. --19.61 A GW SEC 35 T24N R10W -MANTON-

Comments/Influences

The Equalizer. Copyright (c) 1999 - 2009.
Licensed To: Township of Greenwood, County of Wexford, Michigan

Class: RESIDENTIAL-IMPROV Zoning:

School: MANTON CONSOLIDATED SCHOOLS

P.R.E. 100% 01/23/2018

:

2024 Est TCV 261,971 TCV/TFA: 223.91

Building Permit(s)	Date	Number	Status
RESIDENTIAL - REMODEL	03/26/2004	PB12057	

X	Improved		Vacant

	Public Improvements
	Dirt Road
X	Gravel Road
	Paved Road
	Storm Sewer
	Sidewalk
X	Water
X	Sewer
X	Electric
	Gas
	Curb
	Street Lights
X	Standard Utilities
	Underground Utils.

	Topography of Site
X	Level
X	Rolling
	Low
X	High
	Landscaped
	Swamp
X	Wooded
	Pond
	Waterfront
	Ravine
	Wetland
	Flood Plain
X	OPEN/PINES

Who	When	What
GLA	05/11/2020	INSPECTION
GLA	07/10/2019	INSPECTION
GLA	07/10/2019	INSPECTION

Land Value Estimates for Land Table 4010.LAND VALUES

Description	Frontage	Depth	* Factors * Front	Depth	Rate	%Adj.	Reason	Value
ACREAGE			19.110 Acres		3,200	100		61,152
ROW			0.500 Acres		0	100		0
			19.61 Total Acres		Total Est. Land Value =			61,152

Land Improvement Cost Estimates

Description	Rate	Size	% Good	Cash Value
D/W/P: 4in Concrete	7.01	554	54	2,097
Wood Frame	32.53	80	54	1,405
Total Estimated Land Improvements True Cash Value =				3,502

Year	Land Value	Building Value	Assessed Value	Board of Review	Tribunal/ Other	Taxable Value
2024	30,600	100,400	131,000			92,852C
2023	24,800	82,600	107,400			88,431C
2022	21,200	70,100	91,300			84,220C
2021	19,600	71,300	90,900			81,530C

*** Information herein deemed reliable but not guaranteed***

Building Type

X	Single Family
	Mobile Home
	Town Home
	Duplex
	A-Frame
X	Wood Frame

Building Style: TWO STORY

Yr Built	Remodeled
0	0

Condition: Good

Room List

	Basement
	1st Floor
	2nd Floor
	Bedrooms

(1) Exterior

X	Wood/Shingle
	Aluminum/Vinyl
	Brick
	Insulation

(2) Windows

X	Many Avg. Few	X	Large Avg. Small

Wood Sash
Metal Sash
Vinyl Sash
Double Hung
Horiz. Slide
Casement
Double Glass
Patio Doors
Storms & Screens

(3) Roof

X	Gable		Gambrel
	Hip		Mansard
	Flat		Shed

X	Asphalt Shingle

Chimney: Brick

(3) Roof (cont.)

	Eavestrough
	Insulation
0	Front Overhang
0	Other Overhang

(4) Interior

	Drywall		Plaster
	Paneled		Wood T&G

Trim & Decoration

	Ex	X	Ord		Min

Size of Closets

	Lg	X	Ord		Small

Doors:		Solid	X	H.C.	

(5) Floors

Kitchen:
Other:
Other:

(6) Ceilings

(7) Excavation

Basement: 936 S.F.
Crawl: 0 S.F.
Slab: 0 S.F.
Height to Joists: 0.0

(8) Basement

	Conc. Block
	Poured Conc.
	Stone
	Treated Wood
	Concrete Floor

(9) Basement Finish

	Recreation	SF
792	Living	SF
1	Walkout Doors (B)	
	No Floor	SF
	Walkout Doors (A)	

(10) Floor Support

Joists:
Unsupported Len:
Cntr.Sup:

(11) Heating/Cooling

X	Gas		Oil		Elec.
	Wood		Coal		Steam

	Forced Air w/o Ducts
X	Forced Air w/ Ducts
	Forced Hot Water
	Electric Baseboard
	Elec. Ceil. Radiant
	Radiant (in-floor)
	Electric Wall Heat
	Space Heater
	Wall/Floor Furnace
	Forced Heat & Cool
	Heat Pump
	No Heating/Cooling

	Central Air
	Wood Furnace

(12) Electric

0	Amps Service

No./Qual. of Fixtures

	Ex.	X	Ord.		Min

No. of Elec. Outlets

	Many	X	Ave.		Few

(13) Plumbing

2	Average Fixture(s)
	3 Fixture Bath
	2 Fixture Bath
	Softener, Auto
	Softener, Manual
	Solar Water Heat
	No Plumbing
	Extra Toilet
	Extra Sink
	Separate Shower
	Ceramic Tile Floor
	Ceramic Tile Wains
	Ceramic Tub Alcove
	Vent Fan

(14) Water/Sewer

	Public Water
	Public Sewer
1	Water Well
1	1000 Gal Septic
	2000 Gal Septic

Lump Sum Items:

(15) Built-ins

	Appliance Allow.
	Cook Top
	Dishwasher
	Garbage Disposal
	Bath Heater
	Vent Fan
	Hot Tub
	Unvented Hood
	Vented Hood
	Intercom
	Jacuzzi Tub
	Jacuzzi repl.Tub
	Oven
	Microwave
	Standard Range
	Self Clean Range
	Sauna
	Trash Compactor
	Central Vacuum
	Security System

(15) Fireplaces

	Interior 1 Story
	Interior 2 Story
	2nd/Same Stack
	Two Sided
	Exterior 1 Story
	Exterior 2 Story
	Prefab 1 Story
	Prefab 2 Story
	Heat Circulator
	Raised Hearth
	Wood Stove
	Direct-Vented Gas

Class: C
Effec. Age: 46
Floor Area: 1,170
Total Base New : 281,730 E.C.F.
Total Depr Cost: 152,133 X 1.297
Estimated T.C.V: 197,317

(16) Porches/Decks

Area	Type
260	CPP
28	CPP
168	Treated Wood

(17) Garage

Year Built:
Car Capacity:
Class: C
Exterior: Siding
Brick Ven.: 0
Stone Ven.: 0
Common Wall: Detache
Foundation: 18 Inch
Finished ?:
Auto. Doors: 0
Mech. Doors: 0
Area: 576
% Good: 0
Storage Area: 0
No Conc. Floor: 0

Bsmnt Garage:

Carport Area:
Roof:

Cost Est. for Res. Bldg: 1 Single Family TWO STORY Cls C Blt 0
(11) Heating System: Forced Air w/ Ducts
Ground Area = 936 SF Floor Area = 1170 SF.
Phy/Ab.Phy/Func/Econ/Comb. % Good=54/100/100/100/54
Building Areas

Stories	Exterior	Foundation	Size	Cost New	Depr. Cost
1.25 Story	Siding	Basement	936		
			Total:	163,599	88,344
Other Additions/Adjustments					
Basement Living Area			792	28,599	15,443
Basement, Outside Entrance, Below Grade			1	2,578	1,392
Plumbing					
3 Fixture Bath			1	4,678	2,526
Water/Sewer					
1000 Gal Septic			1	4,899	2,645
Water Well, 100 Feet			1	5,849	3,158
Porches					
CPP			260	4,381	2,366
CPP			28	796	430
Deck					
Treated Wood			168	3,718	2,008
Garages					
Class: C Exterior: Siding Foundation: 18 Inch (Unfinished)					
Base Cost			576	22,441	12,118
Class: D Exterior: Pole (Unfinished)					
Base Cost			528	12,123	6,546
Class: CD Exterior: Pole (Unfinished)					
Base Cost			1200	26,100	14,094
Local Cost Items					
FREE STANDING ROOF			272	1,969	1,063

<<<<< Calculations too long. See Valuation printout for complete pricing. >>>>>

*** Information herein deemed reliable but not guaranteed***

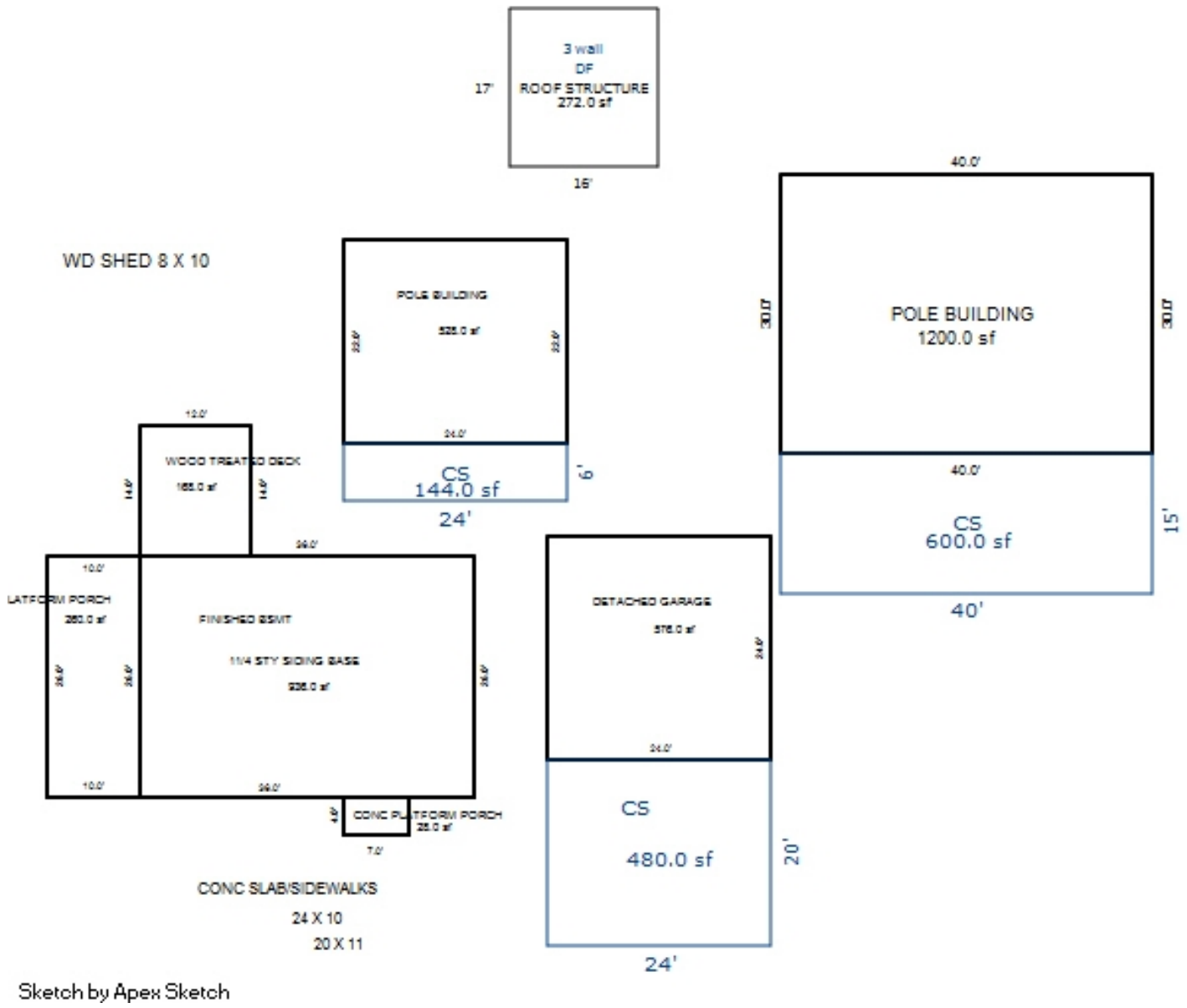

Sketch by Apex Sketch

*** Information herein deemed reliable but not guaranteed***

Parcel Number: 2410-35-3203 Jurisdiction: GREENWOOD TWP County: WEXFORD Printed on 02/15/2024

Grantor	Grantee	Sale Price	Sale Date	Inst. Type	Terms of Sale	Liber & Page	Verified By	Prcnt. Trans.

Property Address
6416 N 33 RD

Owner's Name/Address
LABARRE, RICHARD E. & JODY ANN TRUST 6416 N 33 RD MANTON MI 49663

Tax Description
PAR A; BEG W 1/4 COR OF SEC; E 644.36 FT; S 661.26 FT; W 645.73 FT; N 660.89 FT TO POB. --9.79 A M/L-- GW SEC 35 T24N R10W -MANTON- [[ASSESSED W/ 35-3202 '04

Comments/Influences

The Equalizer. Copyright (c) 1999 - 2009. Licensed To: Township of Greenwood, County of Wexford, Michigan

Class: RESIDENTIAL-IMPROV Zoning:

School: MANTON CONSOLIDATED SCHOOLS

P.R.E. 100% / /

:

2024 Est TCV 270,092 TCV/TFA: 234.45

Building Permit(s)	Date	Number	Status
Garage, Detached	07/11/2023	PB23-0160	ENTERED
Deck	06/01/2020	PB20-0061	COMPLETE
RESIDENTIAL - NEW	06/30/2004	PM7677	
RESIDENTIAL - NEW	05/03/2004	PM7546	

X Improved | Vacant

	Public Improvements
	Dirt Road
X	Gravel Road
	Paved Road
	Storm Sewer
	Sidewalk
	Water
	Sewer
X	Electric
	Gas
	Curb
	Street Lights
	Standard Utilities
	Underground Utils.

	Topography of Site
	Level
X	Rolling
	Low
	High
	Landscaped
	Swamp
X	Wooded
	Pond
	Waterfront
	Ravine
	Wetland
	Flood Plain
X	OPEN

Who	When	What
JB	10/23/2023	INSPECTION
GLA	05/13/2021	INSPECTION
GLA	07/10/2019	INSPECTION

Land Value Estimates for Land Table 4010.LAND VALUES

Description	Frontage	Depth	* Factors * Front	Depth	Rate	%Adj.	Reason	Value
ACREAGE			8.790 Acres		4,788	100		42,088
ROW			1.000 Acres		0	100		0
			9.79 Total Acres		Total Est. Land Value =			42,088

Land Improvement Cost Estimates

Description	Rate	Size	% Good	Cash Value
D/W/P: 3.5 Concrete	6.63	696	60	2,768
D/W/P: 3.5 Concrete	6.63	718	80	3,808
Total Estimated Land Improvements True Cash Value =				6,576

Year	Land Value	Building Value	Assessed Value	Board of Review	Tribunal/ Other	Taxable Value
2024	21,000	114,000	135,000			92,238C
2023	12,500	78,600	91,100			67,275C
2022	11,400	66,300	77,700			64,072C
2021	12,000	66,800	78,800			62,026C

*** Information herein deemed reliable but not guaranteed***

Building Type

X	Single Family
	Mobile Home
	Town Home
	Duplex
	A-Frame
X	Wood Frame

Building Style: PLAIN

Yr Built	Remodeled
2004	0

Condition: Good

Room List

	Basement
	1st Floor
	2nd Floor
	Bedrooms

(1) Exterior

	Wood/Shingle
X	Aluminum/Vinyl
	Brick
X	Insulation

(2) Windows

X	Many Avg. Few	X	Large Avg. Small

	Wood Sash
	Metal Sash
X	Vinyl Sash
	Double Hung
	Horiz. Slide
	Casement
	Double Glass
	Patio Doors
X	Storms & Screens

(3) Roof

X	Gable Hip Flat		Gambrel Mansard Shed
X	Asphalt Shingle		

Chimney:

(3) Roof (cont.)

	Eavestrough
X	Insulation
0	Front Overhang
0	Other Overhang

(4) Interior

X	Drywall Paneled		Plaster Wood T&G

Trim & Decoration

	Ex	X	Ord		Min

Size of Closets

	Lg	X	Ord		Small

Doors: | | Solid | X | H.C.

(5) Floors

Kitchen:
Other: Linoleum
Other: Carpeted

(6) Ceilings

X	Drywall		

(7) Excavation

Basement: 1008 S.F.
Crawl: 144 S.F.
Slab: 0 S.F.
Height to Joists: 0.0

(8) Basement

	Conc. Block
	Poured Conc.
	Stone
	Treated Wood
	Concrete Floor

(9) Basement Finish

	Recreation SF
	Living SF
	Walkout Doors (B)
	No Floor SF
	Walkout Doors (A)

(10) Floor Support

Joists:
Unsupported Len:
Cntr.Sup:

(11) Heating/Cooling

X	Gas Wood		Oil Coal		Elec. Steam

	Forced Air w/o Ducts
	Forced Air w/ Ducts
	Forced Hot Water
	Electric Baseboard
	Elec. Ceil. Radiant
	Radiant (in-floor)
	Electric Wall Heat
	Space Heater
	Wall/Floor Furnace
X	Forced Heat & Cool
	Heat Pump
	No Heating/Cooling

	Central Air
	Wood Furnace

(12) Electric

200	Amps Service

No./Qual. of Fixtures

	Ex.	X	Ord.		Min

No. of Elec. Outlets

	Many	X	Ave.		Few

(13) Plumbing

1	Average Fixture(s)
	3 Fixture Bath
	2 Fixture Bath
	Softener, Auto
	Softener, Manual
	Solar Water Heat
	No Plumbing
	Extra Toilet
	Extra Sink
	Separate Shower
	Ceramic Tile Floor
	Ceramic Tile Wains
	Ceramic Tub Alcove
	Vent Fan

(14) Water/Sewer

	Public Water
	Public Sewer
1	Water Well
1	1000 Gal Septic
	2000 Gal Septic

Lump Sum Items:

(15) Built-ins

	Appliance Allow.
	Cook Top
	Dishwasher
	Garbage Disposal
	Bath Heater
	Vent Fan
	Hot Tub
	Unvented Hood
	Vented Hood
	Intercom
	Jacuzzi Tub
	Jacuzzi repl.Tub
	Oven
	Microwave
	Standard Range
	Self Clean Range
	Sauna
	Trash Compactor
	Central Vacuum
	Security System

(15) Fireplaces

	Interior 1 Story
	Interior 2 Story
	2nd/Same Stack
	Two Sided
	Exterior 1 Story
	Exterior 2 Story
	Prefab 1 Story
	Prefab 2 Story
	Heat Circulator
	Raised Hearth
	Wood Stove
	Direct-Vented Gas

Class: CD
Effec. Age: 20
Floor Area: 1,152
Total Base New : 213,401 E.C.F.
Total Depr Cost: 170,723 X 1.297
Estimated T.C.V: 221,428

(16) Porches/Decks

Area	Type
48	WPP

(17) Garage

Year Built:
Car Capacity:
Class: CD
Exterior: Siding
Brick Ven.: 0
Stone Ven.: 0
Common Wall: 1 Wall
Foundation: 42 Inch
Finished ?:
Auto. Doors: 0
Mech. Doors: 0
Area: 672
% Good: 0
Storage Area: 0
No Conc. Floor: 0

Bsmnt Garage:

Carport Area:
Roof:

Cost Est. for Res. Bldg: 1 Single Family PLAIN Cls CD Blt 2004
(11) Heating System: Forced Heat & Cool
Ground Area = 1152 SF Floor Area = 1152 SF.
Phy/Ab.Phy/Func/Econ/Comb. % Good=80/100/100/100/80
Building Areas

Stories	Exterior	Foundation	Size	Cost New	Depr. Cost
1 Story	Siding	Basement	1,008		
1 Story	Siding	Crawl Space	144		
			Total:	155,320	124,258

Other Additions/Adjustments

Water/Sewer			
1000 Gal Septic	1	4,582	3,666
Water Well, 100 Feet	1	5,680	4,544
Porches			
WPP	48	1,838	1,470
Garages			
Class: CD Exterior: Siding Foundation: 42 Inch (Unfinished)			
Base Cost	672	24,985	19,988
Common Wall: 1 Wall	1	-2,529	-2,023
Class: D Exterior: Siding Foundation: 18 Inch (Unfinished)			
Base Cost	840	23,092	18,474
Door Opener	1	433	346
	Totals:	213,401	170,723

Notes:
ECF (RESIDENTIAL) 1.297 => TCV: 221,428

*** Information herein deemed reliable but not guaranteed***

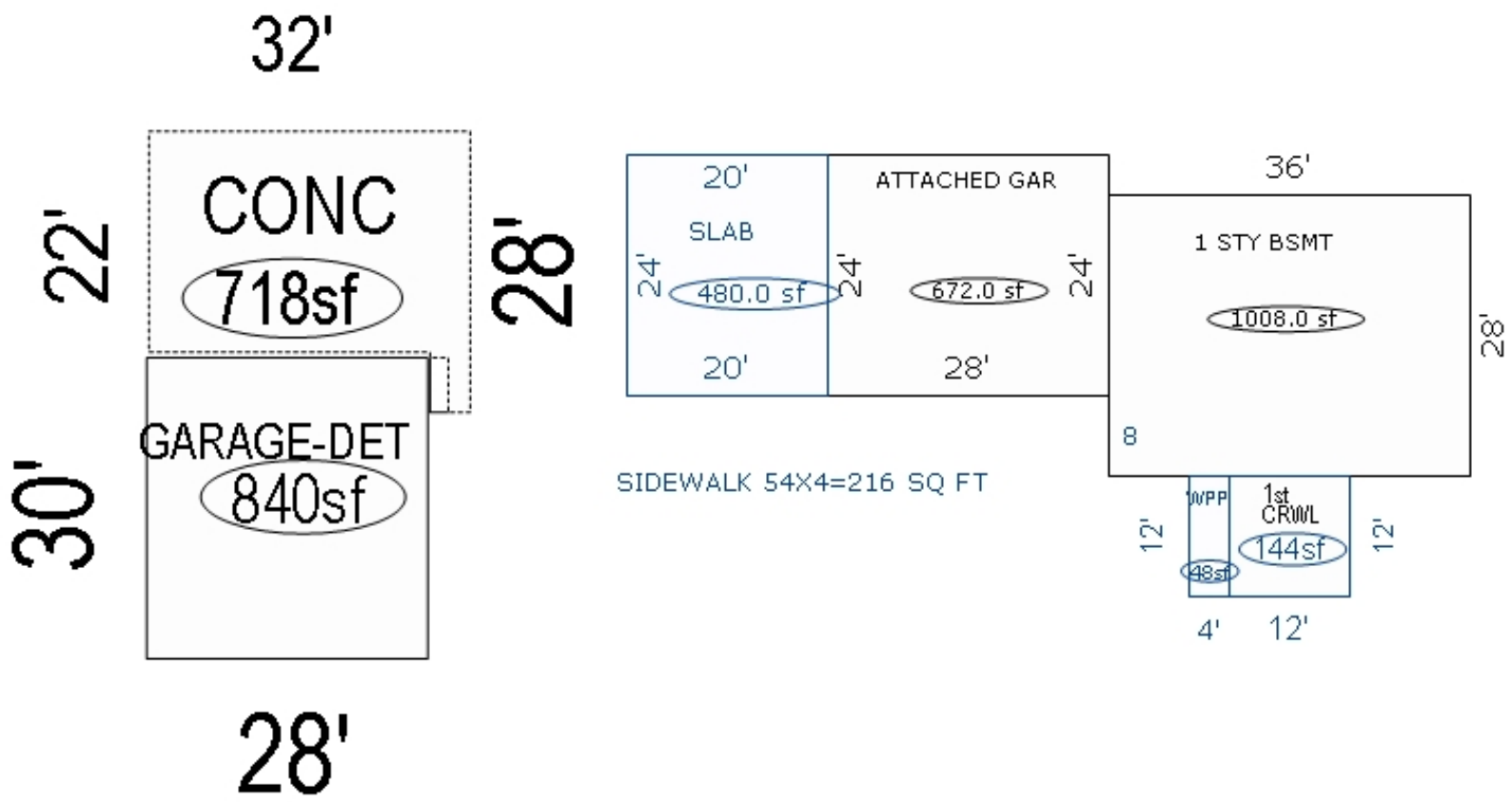

*** Information herein deemed reliable but not guaranteed***

Parcel Number: 2410-35-3204 Jurisdiction: GREENWOOD TWP County: WEXFORD Printed on 02/15/2024

Grantor	Grantee	Sale Price	Sale Date	Inst. Type	Terms of Sale	Liber & Page	Verified By	Prcnt. Trans.
HAMMOND, DENNIS R & KAREN	D & K HAMMOND FAMILY TRUST	0	01/22/2010	QC	14-INTO/OUT OF TRUST	627/940	DEED	0.0
LABARRE, RICHARD & JODY	HAMMOND, DENNIS & KAREN	31,800	02/04/2006	WD	03-ARM'S LENGTH	583:1531	DEED	0.0

Property Address

6326 N 33 RD

Owner's Name/Address

D & K HAMMOND FAMILY TRUST
1789 W G ST LOT 311
AVON PARK FL 33825

Tax Description

PAR B; COM AT W 1/4 COR OF SEC; S 660.89 FT TO POB: E 645.73 FT; S 661.26 FT; W 647.1 FT; N 660.9 FT TO POB. -9.81 A M/L- GW SEC 35 T24N R10W -MANTON- [[ASSESSED W/ 35-3202 '04

Comments/Influences

The Equalizer. Copyright (c) 1999 - 2009. Licensed To: Township of Greenwood, County of Wexford, Michigan

Class: RESIDENTIAL-IMPROV Zoning:

School: MANTON CONSOLIDATED SCHOOLS

P.R.E. 100% 05/01/2009

:

2024 Est TCV 398,524 TCV/TFA: 226.43

Building Permit(s)	Date	Number	Status
Res. Single Family	10/06/2008	PM08-10305	
Res. Single Family	10/03/2008	PP08-4757	
Res. Single Family	07/16/2008	PM08-10180	
Res. Single Family	07/08/2008	PE08-18276	

X Improved | Vacant

	Public Improvements
	Dirt Road
X	Gravel Road
	Paved Road
	Storm Sewer
	Sidewalk
	Water
	Sewer
X	Electric
	Gas
	Curb
	Street Lights
	Standard Utilities
	Underground Utils.

	Topography of Site
	Level
X	Rolling
	Low
	High
	Landscaped
	Swamp
X	Wooded
	Pond
	Waterfront
	Ravine
	Wetland
	Flood Plain
X	OPEN

Who	When	What
GLA	05/11/2020	INSPECTION
GLA	07/10/2019	INSPECTION
GLA	07/10/2019	INSPECTION

Land Value Estimates for Land Table 4010.LAND VALUES

Description	Frontage	Depth	* Factors * Front	Depth	Rate	%Adj.	Reason	Value
ACREAGE			9.310 Acres		4,717	100		43,920
ROW			0.500 Acres		0	100		0
			9.81 Total Acres		Total Est. Land Value =			43,920

Land Improvement Cost Estimates

Description	Rate	Size	% Good	Cash Value
D/W/P: 3.5 Concrete	6.63	804	84	4,478
Total Estimated Land Improvements True Cash Value =				4,478

Year	Land Value	Building Value	Assessed Value	Board of Review	Tribunal/ Other	Taxable Value
2024	22,000	177,300	199,300			109,611C
2023	12,700	144,800	157,500			104,392C
2022	11,700	122,200	133,900			99,421C
2021	12,000	123,400	135,400			96,245C

*** Information herein deemed reliable but not guaranteed***

Building Type

X	Single Family
	Mobile Home
	Town Home
	Duplex
	A-Frame
X	Wood Frame

Building Style: PLAIN

Yr Built	Remodeled
2008	0

Condition: Good

Room List

	Basement
	1st Floor
	2nd Floor
	Bedrooms

(1) Exterior

	Wood/Shingle
X	Aluminum/Vinyl
	Brick
X	Insulation

(2) Windows

	Many		Large
X	Avg.	X	Avg.
	Few		Small

	Wood Sash
	Metal Sash
X	Vinyl Sash
	Double Hung
	Horiz. Slide
	Casement
	Double Glass
	Patio Doors
X	Storms & Screens

(3) Roof

X	Gable		Gambrel
	Hip		Mansard
	Flat		Shed

X	Asphalt Shingle

Chimney:

(3) Roof (cont.)

	Eavestrough
X	Insulation
0	Front Overhang
0	Other Overhang

(4) Interior

X	Drywall		Plaster
	Paneled		Wood T&G

Trim & Decoration

	Ex	X	Ord		Min

Size of Closets

	Lg	X	Ord		Small

Doors:		Solid	X	H.C.	

(5) Floors

Kitchen:
Other: Linoleum
Other: Carpeted

(6) Ceilings

X	Drywall		

(7) Excavation

Basement: 1760 S.F.
Crawl: 0 S.F.
Slab: 0 S.F.
Height to Joists: 0.0

(8) Basement

	Conc. Block
	Poured Conc.
	Stone
	Treated Wood
	Concrete Floor

(9) Basement Finish

	Recreation SF
	Living SF
	Walkout Doors (B)
	No Floor SF
	Walkout Doors (A)

(10) Floor Support

Joists:
Unsupported Len:
Cntr.Sup:

(11) Heating/Cooling

X	Gas		Oil		Elec.
	Wood		Coal		Steam

	Forced Air w/o Ducts
X	Forced Air w/ Ducts
	Forced Hot Water
	Electric Baseboard
	Elec. Ceil. Radiant
	Radiant (in-floor)
	Electric Wall Heat
	Space Heater
	Wall/Floor Furnace
	Forced Heat & Cool
	Heat Pump
	No Heating/Cooling

	Central Air
	Wood Furnace

(12) Electric

150	Amps Service

No./Qual. of Fixtures

	Ex.	X	Ord.		Min

No. of Elec. Outlets

	Many	X	Ave.		Few

(13) Plumbing

	Average Fixture(s)
2	3 Fixture Bath
	2 Fixture Bath
	Softener, Auto
	Softener, Manual
	Solar Water Heat
	No Plumbing
	Extra Toilet
	Extra Sink
	Separate Shower
	Ceramic Tile Floor
	Ceramic Tile Wains
	Ceramic Tub Alcove
	Vent Fan

(14) Water/Sewer

	Public Water
	Public Sewer
1	Water Well
1	1000 Gal Septic
	2000 Gal Septic

Lump Sum Items:

(15) Built-ins

	Appliance Allow.
	Cook Top
	Dishwasher
	Garbage Disposal
	Bath Heater
	Vent Fan
	Hot Tub
	Unvented Hood
	Vented Hood
	Intercom
	Jacuzzi Tub
	Jacuzzi repl.Tub
	Oven
	Microwave
	Standard Range
	Self Clean Range
	Sauna
	Trash Compactor
	Central Vacuum
	Security System

(15) Fireplaces

	Interior 1 Story
	Interior 2 Story
	2nd/Same Stack
	Two Sided
	Exterior 1 Story
	Exterior 2 Story
	Prefab 1 Story
	Prefab 2 Story
	Heat Circulator
	Raised Hearth
	Wood Stove
	Direct-Vented Gas

Class: C
Effec. Age: 16
Floor Area: 1,760
Total Base New : 321,369 E.C.F.
Total Depr Cost: 269,951 X 1.297
Estimated T.C.V: 350,126

(16) Porches/Decks

Area	Type
120	WPP
70	CCP (1 Story)

(17) Garage

Year Built: 2007
Car Capacity:
Class: CD
Exterior: Siding
Brick Ven.: 0
Stone Ven.: 0
Common Wall: 1 Wall
Foundation: 42 Inch
Finished ?:
Auto. Doors: 0
Mech. Doors: 0
Area: 672
% Good: 0
Storage Area: 0
No Conc. Floor: 0

Bsmnt Garage:

Carport Area:
Roof:

Cost Est. for Res. Bldg: 1 Single Family PLAIN Cls C Blt 2008
(11) Heating System: Forced Air w/ Ducts
Ground Area = 1760 SF Floor Area = 1760 SF.
Phy/Ab.Phy/Func/Econ/Comb. % Good=84/100/100/100/84
Building Areas

Stories	Exterior	Foundation	Size	Cost New	Depr. Cost
1 Story	Siding	Basement	1,760		
			Total:	249,069	209,218
Other Additions/Adjustments					
Plumbing					
3 Fixture Bath			1	4,678	3,930
Water/Sewer					
1000 Gal Septic			1	4,899	4,115
Water Well, 100 Feet			1	5,849	4,913
Porches					
WPP			120	3,319	2,788
CCP (1 Story)			70	2,059	1,730
Garages					
Class: CD Exterior: Siding Foundation: 42 Inch (Unfinished)					
Base Cost			672	24,985	20,987
Common Wall: 1 Wall			1	-2,529	-2,124
Class: CD Exterior: Pole (Unfinished)					
Base Cost			1200	26,100	21,924
Local Cost Items					
POLE LEAN TO			560	2,940	2,470
			Totals:	321,369	269,951

Notes:

ECF (RESIDENTIAL) 1.297 => TCV: 350,126

*** Information herein deemed reliable but not guaranteed***

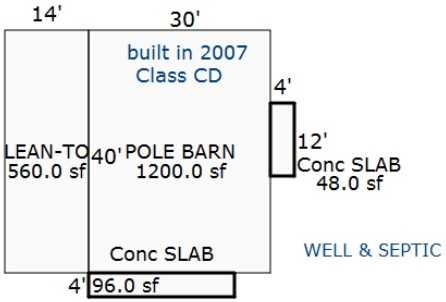

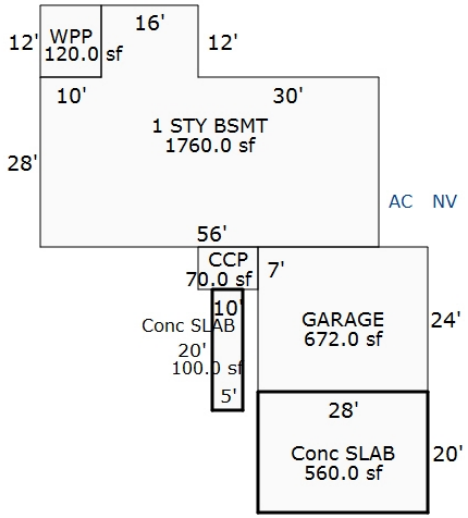

Sketch by Apex Sketch

*** Information herein deemed reliable but not guaranteed***

Parcel Number: 2410-35-3301 Jurisdiction: GREENWOOD TWP County: WEXFORD Printed on 02/15/2024

Grantor	Grantee	Sale Price	Sale Date	Inst. Type	Terms of Sale	Liber & Page	Verified By	Prcnt. Trans.
BATEMAN, KIM S & FRANCIS J	DYER, SCOTT R	37,500	05/04/2001	WD	03-ARM'S LENGTH	602/2952	DEED	0.0
CULVER, GERALD & LINA	BATEMAN, KIM & FRANCES BAT	7,500	09/25/1987	WD	03-ARM'S LENGTH	380:678	DEED	0.0

Property Address

Owner's Name/Address

DYER, SCOTT R
6879 CUT ACROSS RD
REPUBLIC MI 49879

Tax Description

SW 1/4 OF SW 1/4 40 A. GW. SEC. 35 T24N R10W -MANTON-

Comments/Influences

The Equalizer. Copyright (c) 1999 - 2009. Licensed To: Township of Greenwood, County of Wexford, Michigan

Class: AGRICULTURAL-VACAN Zoning:

School: MANTON CONSOLIDATED SCHOOLS

P.R.E. 100% / / Qual. Ag.

:

2024 Est TCV 102,220

Building Permit(s)	Date	Number	Status

	Improved	X	Vacant

	Public Improvements
X	Dirt Road
X	Gravel Road
	Paved Road
	Storm Sewer
	Sidewalk
	Water
	Sewer
X	Electric
	Gas
	Curb
	Street Lights
	Standard Utilities
	Underground Utils.

	Topography of Site
X	Level
	Rolling
	Low
	High
	Landscaped
	Swamp
	Wooded
	Pond
	Waterfront
	Ravine
	Wetland
	Flood Plain
X	OPEN

Who	When	What
GLA	05/11/2020	INSPECTION
GLA	07/10/2019	INSPECTION
GLA	07/10/2019	INSPECTION

Land Value Estimates for Land Table 1010.AG

Description	Frontage	Depth	* Factors * Front	Depth	Rate	%Adj.	Reason	Value
AG LAND	40 ACRES		38.00 Acres		2690	100		102,220
AG LAND	ROW		2.00 Acres		0	100		0
			40.00 Total Acres		Total Est. Land Value =			102,220

Year	Land Value	Building Value	Assessed Value	Board of Review	Tribunal/ Other	Taxable Value
2024	51,100	0	51,100			31,690C
2023	38,000	0	38,000			30,181C
2022	34,200	0	34,200			28,744C
2021	32,300	0	32,300			27,826C

*** Information herein deemed reliable but not guaranteed***

Parcel Number: 2410-35-3402 Jurisdiction: GREENWOOD TWP County: WEXFORD Printed on 02/15/2024

Grantor	Grantee	Sale Price	Sale Date	Inst. Type	Terms of Sale	Liber & Page	Verified By	Prcnt. Trans.
NYE, NANCY L.	NYE, NANCY L. LE	1	01/30/2020	QC	18-LIFE ESTATE	6862/847	DEED	0.0

Property Address

4249 E 14 RD

Owner's Name/Address

NYE, NANCY L. LE
4249 E 14 RD
MANTON MI 49663

Tax Description

W 14 1/2 RDS OF S 36 RDS OF SE 1/4 OF SW 1/4 --3.25 A. M/L GW. SEC. 35 T24N R10W -MANTON-

Comments/Influences

The Equalizer. Copyright (c) 1999 - 2009. Licensed To: Township of Greenwood, County of Wexford, Michigan

Class: RESIDENTIAL-IMPROV Zoning:

School: MANTON CONSOLIDATED SCHOOLS

P.R.E. 100% / /

:

2024 Est TCV 197,375 TCV/TFA: 132.64

Building Permit(s)	Date	Number	Status
RESIDENTIAL - REMODEL	08/21/2001	PE13905	
RESIDENTIAL - REMODEL	05/30/2001	PB10307	

X Improved | Vacant

Public Improvements

- Dirt Road
- X Gravel Road
- Paved Road
- Storm Sewer
- Sidewalk
- Water
- Sewer
- X Electric
- Gas
- Curb
- Street Lights
- Standard Utilities
- Underground Utils.

Topography of Site

- X Level
- X Rolling
- Low
- High
- Landscaped
- Swamp
- X Wooded
- Pond
- Waterfront
- Ravine
- Wetland
- Flood Plain
- X OPEN/PINES

Who	When	What
GLA	05/11/2020	INSPECTION
GLA	07/10/2019	INSPECTION
GLA	07/10/2019	INSPECTION

Land Value Estimates for Land Table 4010.LAND VALUES

Description	Frontage	Depth	* Factors * Front	Depth	Rate	%Adj.	Reason	Value
ACREAGE			3.070 Acres		5,499	100		16,882
ROW			0.180 Acres		0	100		0
			3.25 Total Acres		Total Est. Land Value =			16,882

Land Improvement Cost Estimates

Description	Rate	Size	% Good	Cash Value
D/W/P: 4in Concrete	7.01	878	45	2,770
Total Estimated Land Improvements True Cash Value =				2,770

Year	Land Value	Building Value	Assessed Value	Board of Review	Tribunal/ Other	Taxable Value
2024	8,400	90,300	98,700			53,062C
2023	7,200	74,300	81,500			50,536C
2022	6,500	63,100	69,600			48,130C
2021	6,400	64,100	70,500			46,593C

*** Information herein deemed reliable but not guaranteed***

Building Type

X	Single Family
	Mobile Home
	Town Home
	Duplex
	A-Frame
X	Wood Frame

Building Style: PLAIN

Yr Built	Remodeled
0	0

Condition: Good

Room List

	Basement
	1st Floor
	2nd Floor
	Bedrooms

(1) Exterior

	Wood/Shingle
X	Aluminum/Vinyl
	Brick
X	Insulation

(2) Windows

X	Many		Large
	Avg.	X	Avg.
	Few		Small

	Wood Sash
	Metal Sash
X	Vinyl Sash
	Double Hung
	Horiz. Slide
	Casement
	Double Glass
	Patio Doors
X	Storms & Screens

(3) Roof

X	Gable		Gambrel
	Hip		Mansard
	Flat		Shed
X	Asphalt Shingle		

Chimney:

(3) Roof (cont.)

	Eavestrough
X	Insulation
0	Front Overhang
0	Other Overhang

(4) Interior

X	Drywall		Plaster
	Paneled		Wood T&G

Trim & Decoration

	Ex	X	Ord		Min

Size of Closets

	Lg	X	Ord		Small

Doors:		Solid	X	H.C.	

(5) Floors

Kitchen:
Other: Linoleum
Other: Carpeted

(6) Ceilings

X	Drywall		

(7) Excavation

Basement: 1488 S.F.
Crawl: 0 S.F.
Slab: 0 S.F.
Height to Joists: 0.0

(8) Basement

	Conc. Block
	Poured Conc.
	Stone
	Treated Wood
	Concrete Floor

(9) Basement Finish

	Recreation SF
	Living SF
	Walkout Doors (B)
	No Floor SF
	Walkout Doors (A)

(10) Floor Support

Joists:
Unsupported Len:
Cntr.Sup:

(11) Heating/Cooling

X	Gas		Oil		Elec.
	Wood		Coal		Steam

	Forced Air w/o Ducts
X	Forced Air w/ Ducts
	Forced Hot Water
	Electric Baseboard
	Elec. Ceil. Radiant
	Radiant (in-floor)
	Electric Wall Heat
	Space Heater
	Wall/Floor Furnace
	Forced Heat & Cool
	Heat Pump
	No Heating/Cooling
	Central Air
	Wood Furnace

(12) Electric

150	Amps Service

No./Qual. of Fixtures

	Ex.	X	Ord.		Min

No. of Elec. Outlets

	Many	X	Ave.		Few

(13) Plumbing

2	Average Fixture(s)
	3 Fixture Bath
	2 Fixture Bath
	Softener, Auto
	Softener, Manual
	Solar Water Heat
	No Plumbing
	Extra Toilet
	Extra Sink
	Separate Shower
	Ceramic Tile Floor
	Ceramic Tile Wains
	Ceramic Tub Alcove
	Vent Fan

(14) Water/Sewer

	Public Water
	Public Sewer
1	Water Well
1	1000 Gal Septic
	2000 Gal Septic

Lump Sum Items:

(15) Built-ins

	Appliance Allow.
	Cook Top
	Dishwasher
	Garbage Disposal
	Bath Heater
	Vent Fan
	Hot Tub
	Unvented Hood
	Vented Hood
	Intercom
	Jacuzzi Tub
	Jacuzzi repl.Tub
	Oven
	Microwave
	Standard Range
	Self Clean Range
	Sauna
	Trash Compactor
	Central Vacuum
	Security System

(15) Fireplaces

	Interior 1 Story
	Interior 2 Story
	2nd/Same Stack
	Two Sided
	Exterior 1 Story
	Exterior 2 Story
	Prefab 1 Story
	Prefab 2 Story
	Heat Circulator
	Raised Hearth
	Wood Stove
	Direct-Vented Gas

Class: CD
Effec. Age: 49
Floor Area: 1,488
Total Base New : 268,678 E.C.F.
Total Depr Cost: 137,026 X 1.297
Estimated T.C.V: 177,723

(16) Porches/Decks

Area	Type
16	CCP (1 Story)
24	WGEP (1 Story)
98	WPP

(17) Garage

Year Built:
Car Capacity:
Class: CD
Exterior: Siding
Brick Ven.: 0
Stone Ven.: 0
Common Wall: 1 Wall
Foundation: 42 Inch
Finished ?:
Auto. Doors: 0
Mech. Doors: 0
Area: 1368
% Good: 0
Storage Area: 0
No Conc. Floor: 0

Bsmnt Garage:

Carport Area:
Roof:

Cost Est. for Res. Bldg: 1 Single Family PLAIN Cls CD Blt 0
(11) Heating System: Forced Air w/ Ducts
Ground Area = 1488 SF Floor Area = 1488 SF.
Phy/Ab.Phy/Func/Econ/Comb. % Good=51/100/100/100/51
Building Areas

Stories	Exterior	Foundation	Size	Cost New	Depr. Cost
1 Story	Siding	Basement	1,488		
			Total:	189,722	96,758
Other Additions/Adjustments					
Plumbing					
3 Fixture Bath			1	3,887	1,982
Water/Sewer					
1000 Gal Septic			1	4,582	2,337
Water Well, 100 Feet			1	5,680	2,897
Porches					
WPP			98	2,576	1,314
CCP (1 Story)			16	760	388
WGEP (1 Story)			24	2,170	1,107
Garages					
Class: CD Exterior: Siding Foundation: 42 Inch (Unfinished)					
Common Wall: 1 Wall			1	-2,529	-1,290
Base Cost			1368	44,118	22,500
Class: D Exterior: Pole (Unfinished)					
Base Cost			864	17,712	9,033
			Totals:	268,678	137,026

Notes:
ECF (RESIDENTIAL) 1.297 => TCV: 177,723

*** Information herein deemed reliable but not guaranteed***

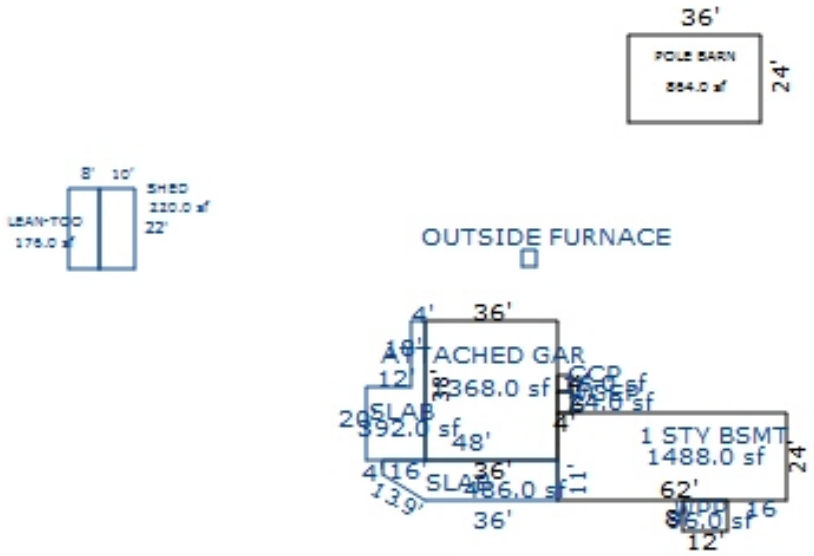

Sketch by Apex Sketch

*** Information herein deemed reliable but not guaranteed***

Parcel Number: 2410-35-4101 Jurisdiction: GREENWOOD TWP County: WEXFORD Printed on 02/15/2024

Grantor	Grantee	Sale Price	Sale Date	Inst. Type	Terms of Sale	Liber & Page	Verified By	Prcnt. Trans.
DELEON, MELISSA KAY	FRASER, GEORGE D JR TRUST	65,000	10/28/2020	WD	22-OUTLIER	688/1577	AGENT	100.0
VAN WYCK, MARY FAY	DELEON, MELISSA KAY	0	07/11/2019	QC	21-NOT USED/OTHER	685 /1186	DEED	0.0
DELEON, MELISSA K & MARY F	DELEON, MELISSA KAY	0	09/18/2017	QC	21-NOT USED/OTHER	681/255	DEED	0.0
VANWYCK, MARY FAY	DELEON, MELISSA K & MARY F	0	03/07/2014	QC	09-FAMILY	666/817	DEED	0.0

Property Address

6305 N 35 RD 231-884-5066

Owner's Name/Address

FRASER, GEORGE D JR TRUST
3327 WEST COUNTY FARM RD
SHERIDAN MI 48884

Tax Description

E 1/2 OF NE 1/4 OF SE 1/4 EXC 1 SQ ACRE IN NE COR & EXC 1 SQ ACRE IN NW COR; & EXC 1 SQ ACRE IN SE COR OF N 1/2 OF SE 1/4 OF NE 1/4 OF SE 1/4 --17 A.-- GW. SEC. 35 T24N R10W -MANTON-

Comments/Influences

The Equalizer. Copyright (c) 1999 - 2009. Licensed To: Township of Greenwood, County of Wexford, Michigan

Class: RESIDENTIAL-IMPROV Zoning:

School: MANTON CONSOLIDATED SCHOOLS

P.R.E. 0%

:

2024 Est TCV 134,383 TCV/TFA: 111.99

Building Permit(s)	Date	Number	Status
RESIDENTIAL - NEW	04/13/2005	PB12647	
RESIDENTIAL - REMODEL	11/19/2003	PM7246	

X Improved | Vacant

Public Improvements

- Dirt Road
- X Gravel Road
- Paved Road
- Storm Sewer
- Sidewalk
- Water
- Sewer
- X Electric
- Gas
- Curb
- Street Lights
- Standard Utilities
- Underground Utils.

Topography of Site

- Level
- X Rolling
- X Low
- High
- Landscaped
- X Swamp
- X Wooded
- Pond
- Waterfront
- Ravine
- Wetland
- Flood Plain
- X OPEN/PINES

Who	When	What
GLA	05/11/2020	INSPECTION
GLA	07/10/2019	INSPECTION
GLA	07/10/2019	INSPECTION

Land Value Estimates for Land Table 4010.LAND VALUES

Description	Frontage	Depth	* Factors * Front	Depth	Rate	%Adj.	Reason	Value
ACREAGE			16.140 Acres		3,200	100		51,648
ROW			0.860 Acres		0	100		0
			17.00 Total Acres		Total Est. Land Value =			51,648

Land Improvement Cost Estimates

Description	Rate	Size	% Good	Cash Value
Wood Frame	23.57	96	25	566
Total Estimated Land Improvements True Cash Value =				566

Year	Land Value	Building Value	Assessed Value	Board of Review	Tribunal/ Other	Taxable Value
2024	25,800	41,400	67,200			50,825C
2023	21,000	33,300	54,300			48,405C
2022	18,300	27,800	46,100			46,100S
2021	18,500	27,700	46,200			46,200S

*** Information herein deemed reliable but not guaranteed***

Building Type

X	Single Family
	Mobile Home
	Town Home
	Duplex
	A-Frame
X	Wood Frame

Building Style: PLAIN

Yr Built	Remodeled
0	0

Condition: Good

Room List

	Basement
	1st Floor
	2nd Floor
	Bedrooms

(1) Exterior

	Wood/Shingle
X	Aluminum/Vinyl
	Brick
X	Insulation

(2) Windows

	Many		Large
X	Avg.	X	Avg.
	Few		Small

	Wood Sash
	Metal Sash
X	Vinyl Sash
	Double Hung
	Horiz. Slide
	Casement
	Double Glass
	Patio Doors
X	Storms & Screens

(3) Roof

X	Gable		Gambrel
	Hip		Mansard
	Flat		Shed

X	Asphalt Shingle

Chimney:

(3) Roof (cont.)

	Eavestrough
X	Insulation
0	Front Overhang
0	Other Overhang

(4) Interior

X	Drywall		Plaster
	Paneled		Wood T&G

Trim & Decoration

	Ex	X	Ord		Min

Size of Closets

	Lg	X	Ord		Small

Doors:		Solid	X	H.C.	

(5) Floors

Kitchen:
Other: Linoleum
Other: Carpeted

(6) Ceilings

X	Drywall		

(7) Excavation

Basement: 0 S.F.
Crawl: 960 S.F.
Slab: 0 S.F.
Height to Joists: 0.0

(8) Basement

	Conc. Block
	Poured Conc.
	Stone
	Treated Wood
	Concrete Floor

(9) Basement Finish

	Recreation SF
	Living SF
	Walkout Doors (B)
	No Floor SF
	Walkout Doors (A)

(10) Floor Support

Joists:
Unsupported Len:
Cntr.Sup:

(11) Heating/Cooling

X	Gas		Oil		Elec.
	Wood		Coal		Steam

	Forced Air w/o Ducts
X	Forced Air w/ Ducts
	Forced Hot Water
	Electric Baseboard
	Elec. Ceil. Radiant
	Radiant (in-floor)
	Electric Wall Heat
	Space Heater
	Wall/Floor Furnace
	Forced Heat & Cool
	Heat Pump
	No Heating/Cooling

	Central Air
	Wood Furnace

(12) Electric

150	Amps Service

No./Qual. of Fixtures

	Ex.	X	Ord.		Min

No. of Elec. Outlets

	Many	X	Ave.		Few

(13) Plumbing

	Average Fixture(s)
1	3 Fixture Bath
	2 Fixture Bath
	Softener, Auto
	Softener, Manual
	Solar Water Heat
	No Plumbing
	Extra Toilet
	Extra Sink
	Separate Shower
	Ceramic Tile Floor
	Ceramic Tile Wains
	Ceramic Tub Alcove
	Vent Fan

(14) Water/Sewer

	Public Water
	Public Sewer
1	Water Well
1	1000 Gal Septic
	2000 Gal Septic

Lump Sum Items:

(15) Built-ins

	Appliance Allow.
	Cook Top
	Dishwasher
	Garbage Disposal
	Bath Heater
	Vent Fan
	Hot Tub
	Unvented Hood
	Vented Hood
	Intercom
	Jacuzzi Tub
	Jacuzzi repl.Tub
	Oven
	Microwave
	Standard Range
	Self Clean Range
	Sauna
	Trash Compactor
	Central Vacuum
	Security System

(15) Fireplaces

	Interior 1 Story
	Interior 2 Story
	2nd/Same Stack
	Two Sided
	Exterior 1 Story
	Exterior 2 Story
	Prefab 1 Story
	Prefab 2 Story
	Heat Circulator
	Raised Hearth
	Wood Stove
	Direct-Vented Gas

Class: D
Effec. Age: 65
Floor Area: 1,200
Total Base New : 140,786 E.C.F.
Total Depr Cost: 63,353 X 1.297
Estimated T.C.V: 82,169

(16) Porches/Decks

Area	Type
696	WPP
32	4in Concrete
144	Treated Wood

(17) Garage

Year Built:
Car Capacity:
Class:
Exterior:
Brick Ven.:
Stone Ven.:
Common Wall:
Foundation:
Finished ?:
Auto. Doors:
Mech. Doors:
Area:
% Good:
Storage Area:
No Conc. Floor:

Bsmnt Garage:

Carport Area:
Roof:

Cost Est. for Res. Bldg: 1 Single Family PLAIN Cls D Blt 0
(11) Heating System: Forced Air w/ Ducts
Ground Area = 960 SF Floor Area = 1200 SF.
Phy/Ab.Phy/Func/Econ/Comb. % Good=45/100/100/100/45
Building Areas

Stories	Exterior	Foundation	Size	Cost New	Depr. Cost
1.25 Story	Siding	Crawl Space	960		
			Total:	121,479	54,664
Other Additions/Adjustments					
Water/Sewer					
1000 Gal Septic			1	4,293	1,932
Water Well, 50 Feet			1	2,515	1,132
Porches					
WPP			696	9,069	4,081
4in Concrete			32	213	96
Deck					
Treated Wood			144	3,217	1,448
			Totals:	140,786	63,353

Notes:
ECF (RESIDENTIAL) 1.297 => TCV: 82,169

*** Information herein deemed reliable but not guaranteed***

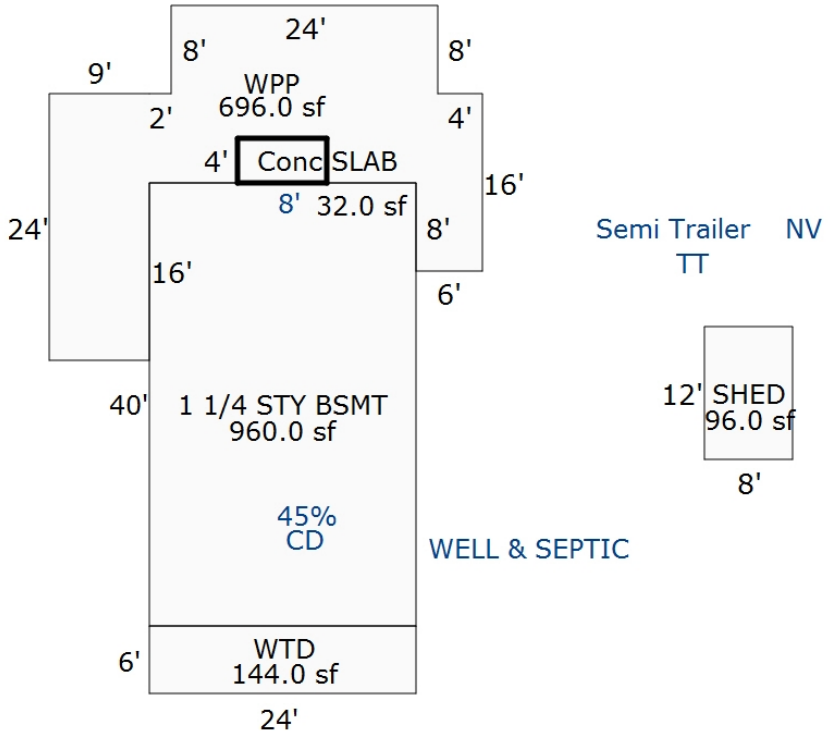

Sketch by Apex Sketch

*** Information herein deemed reliable but not guaranteed***

Parcel Number: 2410-35-4102 Jurisdiction: GREENWOOD TWP County: WEXFORD Printed on 02/15/2024

Grantor	Grantee	Sale Price	Sale Date	Inst. Type	Terms of Sale	Liber & Page	Verified By	Prcnt. Trans.
VANWYCK, HAROLD R.	HUTCHINSON, JEREMY	68,000	02/28/2018	WD	03-ARM'S LENGTH	682/191	DEED	100.0
BLOOM, JUDITH A.	VANWYCK, HAROLD R.	17,000	12/19/1987	WD	03-ARM'S LENGTH	309:361	DEED	0.0

Property Address

4828 E 12 1/2 RD

Owner's Name/Address

HUTCHINSON, JEREMY
4828 E 12 1/2 RD
MANTON MI 49663

Tax Description

W 1/2 OF NE 1/4 OF SE 1/4 20 A. GW. SEC. 35 T24N R10W -MANTON-

Comments/Influences

Class: RESIDENTIAL-IMPROV Zoning:

School: MANTON CONSOLIDATED SCHOOLS

P.R.E. 100% 06/13/2018

:

2024 Est TCV 129,618 TCV/TFA: 140.28

Building Permit(s)	Date	Number	Status

X	Improved		Vacant

	Public Improvements
	Dirt Road
X	Gravel Road
	Paved Road
	Storm Sewer
	Sidewalk
	Water
	Sewer
X	Electric
	Gas
	Curb
	Street Lights
	Standard Utilities
	Underground Utils.

	Topography of Site
	Level
X	Rolling
X	Low
	High
	Landscaped
	Swamp
X	Wooded
	Pond
	Waterfront
	Ravine
	Wetland
	Flood Plain
X	OPEN

Who	When	What
GLA	05/11/2020	INSPECTION
GLA	07/10/2019	INSPECTION
GLA	07/10/2019	INSPECTION

Land Value Estimates for Land Table 4010.LAND VALUES

Description	Frontage	Depth	* Factors * Front	Depth	Rate	%Adj.	Reason	Value
ACREAGE			19.510 Acres		3,200	100		62,432
ROW			0.490 Acres		0	100		0
			20.00 Total Acres		Total Est. Land Value =			62,432

Land Improvement Cost Estimates

Description	Rate	Size	% Good	Cash Value
D/W/P: 4in Concrete	7.01	66	46	213
Wood Frame	24.67	216	46	2,451
Total Estimated Land Improvements True Cash Value =				2,664

Year	Land Value	Building Value	Assessed Value	Board of Review	Tribunal/ Other	Taxable Value
2024	31,200	33,600	64,800			42,009C
2023	25,400	28,400	53,800			40,009C
2022	21,500	25,300	46,800			38,104C
2021	19,800	23,000	42,800			36,887C

The Equalizer. Copyright (c) 1999 - 2009.
Licensed To: Township of Greenwood, County of Wexford, Michigan

*** Information herein deemed reliable but not guaranteed***

Building Type

	Single Family
X	Mobile Home
	Town Home
	Duplex
	A-Frame

X	Wood Frame

Building Style: SWT/DWT

Yr Built	Remodeled
0	0

Condition: Good

Room List

	Basement
	1st Floor
	2nd Floor
	Bedrooms

(1) Exterior

	Wood/Shingle
	Aluminum/Vinyl
X	Brick
X	Insulation

(2) Windows

	Many		Large
	Avg.		Avg.
X	Few	X	Small

	Wood Sash
	Metal Sash
X	Vinyl Sash
	Double Hung
	Horiz. Slide
	Casement
	Double Glass
	Patio Doors
X	Storms & Screens

(3) Roof

X	Gable		Gambrel
	Hip		Mansard
	Flat		Shed

X	Asphalt Shingle

Chimney:

(3) Roof (cont.)

	Eavestrough
X	Insulation
0	Front Overhang
0	Other Overhang

(4) Interior

X	Drywall		Plaster
	Paneled		Wood T&G

Trim & Decoration

	Ex	X	Ord		Min

Size of Closets

	Lg	X	Ord		Small

Doors:		Solid	X	H.C.	

(5) Floors

Kitchen:
Other: Linoleum
Other: Carpeted

(6) Ceilings

X	Drywall

(7) Excavation

Basement: 0 S.F.
Crawl: 0 S.F.
Slab: 0 S.F.
Height to Joists: 0.0

(8) Basement

	Conc. Block
	Poured Conc.
	Stone
	Treated Wood
	Concrete Floor

(9) Basement Finish

	Recreation SF
	Living SF
	Walkout Doors (B)
	No Floor SF
	Walkout Doors (A)

(10) Floor Support

Joists:
Unsupported Len:
Cntr.Sup:

(11) Heating/Cooling

X	Gas		Oil		Elec.
	Wood		Coal		Steam

X	Forced Warm Air
	Wall Furnace
	Warm & Cool Air
	Heat Pump

	Central Air
	Wood Furnace

(12) Electric

150	Amps Service

No./Qual. of Fixtures

	Ex.	X	Ord.		Min

No. of Elec. Outlets

	Many	X	Ave.		Few

(13) Plumbing

1	Average Fixture(s)
	3 Fixture Bath
	2 Fixture Bath
	Softener, Auto
	Softener, Manual
	Solar Water Heat
	No Plumbing
	Extra Toilet
	Extra Sink
	Separate Shower
	Ceramic Tile Floor
	Ceramic Tile Wains
	Ceramic Tub Alcove
	Vent Fan

(14) Water/Sewer

	Public Water
	Public Sewer
1	Water Well
1	1000 Gal Septic
	2000 Gal Septic

Lump Sum Items:

(15) Built-ins

	Appliance Allow.
	Cook Top
	Dishwasher
	Garbage Disposal
	Bath Heater
	Vent Fan
	Hot Tub
	Unvented Hood
	Vented Hood
	Intercom
	Jacuzzi Tub
	Jacuzzi repl.Tub
	Oven
	Microwave
	Standard Range
	Self Clean Range
	Sauna
	Trash Compactor
	Central Vacuum
	Security System

(15) Fireplaces

	Interior 1 Story
	Interior 2 Story
	2nd/Same Stack
	Two Sided
	Exterior 1 Story
	Exterior 2 Story
	Prefab 1 Story
	Prefab 2 Story
	Heat Circulator
	Raised Hearth
	Wood Stove
	Direct-Vented Gas

Class: Fair
Effec. Age: 20
Floor Area:
Total Base New : 108,146 E.C.F.
Total Depr Cost: 49,747 X 1.297
Estimated T.C.V: 64,522

(16) Porches/Decks

Area	Type
402	WPP
120	Treated Wood

(17) Garage

Year Built:
Car Capacity:
Class: CD
Exterior: Pole
Brick Ven.: 0
Stone Ven.: 0
Common Wall: Detache
Foundation: 18 Inch
Finished ?:
Auto. Doors: 0
Mech. Doors: 0
Area: 1344
% Good: 0
Storage Area: 0
No Conc. Floor: 0

Bsmnt Garage:

Carport Area:
Roof:

Cost Est. for Res. Bldg: 1 Mobile Home SWT/DWT Cls Fair Blt 0
(11) Heating System: Wall Furnace
Ground Area = 924 SF Floor Area = 924 SF.
Phy/Ab.Phy/Func/Econ/Comb. % Good=46/100/100/100/46
Building Areas

Type	Ext. Walls	Roof/Fnd.	Size	Cost New	Depr. Cost
Main Home	Ribbed	Metal	924		
Expando			150		
			Total:	54,014	24,845
Other Additions/Adjustments					
Skirting, Concrete Block			134	2,523	1,161
Water/Sewer					
1000 Gal Septic			1	4,582	2,108
Water Well, 100 Feet			1	5,680	2,613
Porches					
WPP			402	8,153	3,750
Deck					
Treated Wood			120	2,900	1,334
Garages					
Class: CD Exterior: Pole (Unfinished)					
Base Cost			1344	29,232	13,447
Local Cost Items					
POLE LEANTO DIRT			287	1,062	489
			Totals:	108,146	49,747

Notes:

ECF (RESIDENTIAL) 1.297 => TCV: 64,522

*** Information herein deemed reliable but not guaranteed***

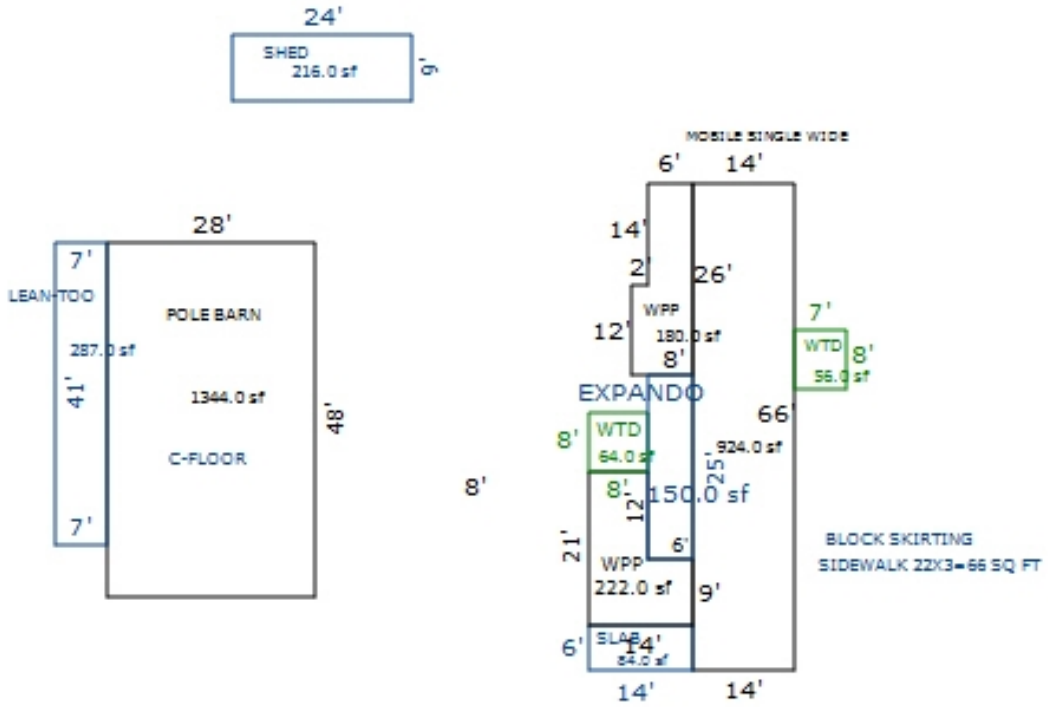

Sketch by Apex Sketch

*** Information herein deemed reliable but not guaranteed***

Parcel Number: 2410-35-4103 Jurisdiction: GREENWOOD TWP County: WEXFORD Printed on 02/15/2024

Grantor	Grantee	Sale Price	Sale Date	Inst. Type	Terms of Sale	Liber & Page	Verified By	Prcnt. Trans.
KIRBY, BETSY	GREENFIELD DAVID & LEAHNA	150,000	10/06/2023	WD	03-ARM'S LENGTH	696/683	DEED	100.0
SCHOENMAKER, SARRA E	KIRBY, BETSY	85,000	03/03/2023	WD	03-ARM'S LENGTH	694/2598	DEED	100.0
DELEON, MELISSA	SCHOENMAKER, SARRA E	50,000	12/18/2020	LC	03-ARM'S LENGTH	688/2724	AGENT	100.0
VANWYCK, STEVEN R	DELEON, MELISSA	0	10/27/2020	QC	09-FAMILY	688/2723	AGENT	0.0

Property Address

6481 N 35 RD

Owner's Name/Address

GREENFIELD DAVID & LEAHNA
2703 E MOORESTOWN RD
LAKE CITY MI 49651

Tax Description

ONE SQUARE ACRE IN NE COR OF NE 1/4 OF SE 1/4 GW. SEC. 35 T24N R10W -MANTON-

Comments/Influences

Class: RESIDENTIAL-IMPROV Zoning:

School: MANTON CONSOLIDATED SCHOOLS

P.R.E. 0%

:

2024 Est TCV 105,574 TCV/TFA: 109.97

Building Permit(s)	Date	Number	Status
OTHER	06/03/2005	PM8435	
RESIDENTIAL - NEW	04/20/2005	PP3804	
MOBILE HOME	04/18/2005	PE16789	

X Improved | Vacant

Public Improvements

- Dirt Road
- X Gravel Road
- Paved Road
- Storm Sewer
- Sidewalk
- Water
- Sewer
- X Electric
- Gas
- Curb
- Street Lights
- Standard Utilities
- Underground Utils.

Topography of Site

- X Level
- Rolling
- Low
- High
- Landscaped
- Swamp
- X Wooded
- Pond
- Waterfront
- Ravine
- Wetland
- Flood Plain
- X OPEN

Who	When	What
GLA	05/11/2020	INSPECTION
GLA	07/10/2019	INSPECTION
GLA	07/10/2019	INSPECTION

The Equalizer. Copyright (c) 1999 - 2009. Licensed To: Township of Greenwood, County of Wexford, Michigan

Land Value Estimates for Land Table 4010.LAND VALUES

Description	Frontage	Depth	* Factors * Front	Depth	Rate	%Adj.	Reason	Value
ACREAGE			0.685	Acres	10,953	100		7,503
ROW			0.315	Acres	0	100		0
			1.00	Total Acres			Total Est. Land Value =	7,503

Land Improvement Cost Estimates

Description	Rate	Size	% Good	Cash Value
Wood Frame	23.62	316	46	3,433
Total Estimated Land Improvements True Cash Value =				3,433

Year	Land Value	Building Value	Assessed Value	Board of Review	Tribunal/ Other	Taxable Value
2024	3,800	49,000	52,800			52,800S
2023	2,100	30,200	32,300			28,350C
2022	1,700	25,300	27,000			27,000S
2021	2,100	25,600	27,700			27,700S

*** Information herein deemed reliable but not guaranteed***

Building Type

X	Single Family
	Mobile Home
	Town Home
	Duplex
	A-Frame
X	Wood Frame

Building Style: PLAIN

Yr Built	Remodeled
0	0

Condition: Good

Room List

	Basement
	1st Floor
	2nd Floor
	Bedrooms

(1) Exterior

X	Wood/Shingle
	Aluminum/Vinyl
	Brick
X	Insulation

(2) Windows

	Many		Large
X	Avg.	X	Avg.
	Few		Small

X	Wood Sash
	Metal Sash
X	Vinyl Sash
	Double Hung
	Horiz. Slide
	Casement
	Double Glass
	Patio Doors
X	Storms & Screens

(3) Roof

X	Gable		Gambrel
	Hip		Mansard
	Flat		Shed

X	Asphalt Shingle

Chimney:

(3) Roof (cont.)

	Eavestrough
X	Insulation
0	Front Overhang
0	Other Overhang

(4) Interior

X	Drywall		Plaster
	Paneled		Wood T&G

Trim & Decoration

	Ex	X	Ord		Min

Size of Closets

	Lg	X	Ord		Small

Doors:		Solid	X	H.C.	

(5) Floors

Kitchen:
Other: Linoleum
Other: Carpeted

(6) Ceilings

X	Drywall

(7) Excavation

Basement: 0 S.F.
Crawl: 960 S.F.
Slab: 0 S.F.
Height to Joists: 0.0

(8) Basement

	Conc. Block
	Poured Conc.
	Stone
	Treated Wood
	Concrete Floor

(9) Basement Finish

	Recreation SF
	Living SF
	Walkout Doors (B)
	No Floor SF
	Walkout Doors (A)

(10) Floor Support

Joists:
Unsupported Len:
Cntr.Sup:

(11) Heating/Cooling

X	Gas		Oil		Elec.
	Wood		Coal		Steam

	Forced Air w/o Ducts
	Forced Air w/ Ducts
	Forced Hot Water
	Electric Baseboard
	Elec. Ceil. Radiant
	Radiant (in-floor)
	Electric Wall Heat
	Space Heater
	Wall/Floor Furnace
	Forced Heat & Cool
	Heat Pump
X	No Heating/Cooling

	Central Air
	Wood Furnace

(12) Electric

150	Amps Service

No./Qual. of Fixtures

	Ex.	X	Ord.		Min

No. of Elec. Outlets

	Many	X	Ave.		Few

(13) Plumbing

	Average Fixture(s)
1	3 Fixture Bath
	2 Fixture Bath
	Softener, Auto
	Softener, Manual
	Solar Water Heat
	No Plumbing
	Extra Toilet
	Extra Sink
	Separate Shower
	Ceramic Tile Floor
	Ceramic Tile Wains
	Ceramic Tub Alcove
	Vent Fan

(14) Water/Sewer

	Public Water
	Public Sewer
	Water Well
1	1000 Gal Septic
	2000 Gal Septic

Lump Sum Items:

(15) Built-ins

	Appliance Allow.
	Cook Top
	Dishwasher
	Garbage Disposal
	Bath Heater
	Vent Fan
	Hot Tub
	Unvented Hood
	Vented Hood
	Intercom
	Jacuzzi Tub
	Jacuzzi repl.Tub
	Oven
	Microwave
	Standard Range
	Self Clean Range
	Sauna
	Trash Compactor
	Central Vacuum
	Security System

(15) Fireplaces

	Interior 1 Story
	Interior 2 Story
	2nd/Same Stack
	Two Sided
	Exterior 1 Story
	Exterior 2 Story
	Prefab 1 Story
	Prefab 2 Story
	Heat Circulator
	Raised Hearth
	Wood Stove
	Direct-Vented Gas

Class: CD
Effec. Age: 40
Floor Area: 960
Total Base New : 121,612 E.C.F.
Total Depr Cost: 72,967 X 1.297
Estimated T.C.V: 94,638

(16) Porches/Decks

Area	Type
192	WPP
128	WPP

(17) Garage

Year Built:
Car Capacity:
Class:
Exterior:
Brick Ven.:
Stone Ven.:
Common Wall:
Foundation:
Finished ?:
Auto. Doors:
Mech. Doors:
Area:
% Good:
Storage Area:
No Conc. Floor:

Bsmnt Garage:

Carport Area:
Roof:

Cost Est. for Res. Bldg: 1 Single Family PLAIN Cls CD Blt 0
(11) Heating System: No Heating/Cooling
Ground Area = 960 SF Floor Area = 960 SF.
Phy/Ab.Phy/Func/Econ/Comb. % Good=60/100/100/100/60
Building Areas

Stories	Exterior	Foundation	Size	Cost New	Depr. Cost
1 Story	Siding	Crawl Space	960		
			Total:	109,914	65,948
Other Additions/Adjustments					
Water/Sewer					
1000 Gal Septic			1	4,582	2,749
Porches					
WPP			192	4,003	2,402
WPP			128	3,113	1,868
			Totals:	121,612	72,967

Notes:
ECF (RESIDENTIAL) 1.297 => TCV: 94,638

*** Information herein deemed reliable but not guaranteed***

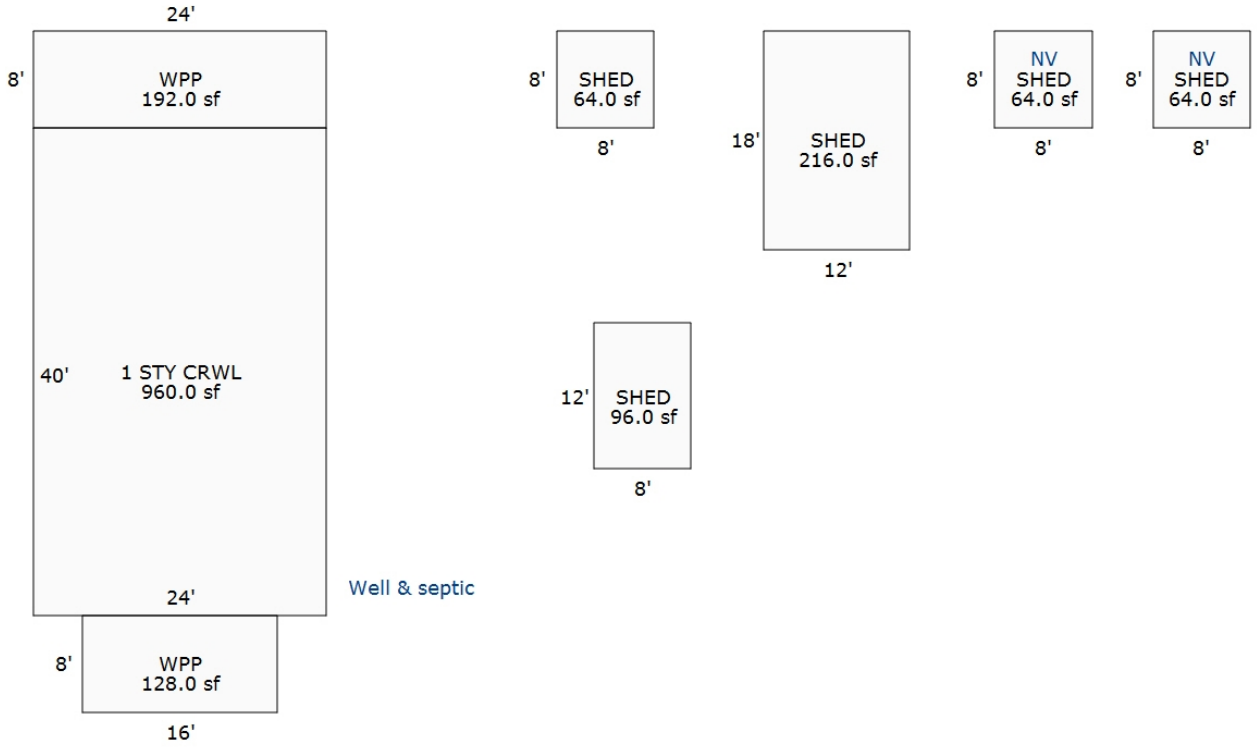

Sketch by Apex Sketch

*** Information herein deemed reliable but not guaranteed***

Parcel Number: 2410-35-4105 Jurisdiction: GREENWOOD TWP County: WEXFORD Printed on 02/15/2024

Grantor	Grantee	Sale Price	Sale Date	Inst. Type	Terms of Sale	Liber & Page	Verified By	Prcnt. Trans.
DELEON, MELISSA KAY	FRASER, GEORGE D JR TRUST	65,000	10/28/2020	WD	22-OUTLIER	688/1577	AGENT	100.0
VANWYCK, STEVEN R.	DELEON, MELISSA K	0	02/12/2014	QC	21-NOT USED/OTHER	665/2356	DEED	100.0

Property Address

6335 N 35 RD 231-884-5066

Owner's Name/Address

FRASER, GEORGE D JR TRUST
3327 WEST COUNTY FARM RD
SHERIDAN MI 48884

Tax Description

1 SQ ACRE IN SE COR OF N 1/2 OF SE 1/4 OF NE 1/4 OF SE 1/4 & 1 SQ ACRE IN NW COR OF E 1/2 OF NE 1/4 OF SE 1/4 -2 A.-- GW. SEC. 35 T24N R10W -MANTON- COMBINED 2410-35-4104 3/2011

Comments/Influences

The Equalizer. Copyright (c) 1999 - 2009. Licensed To: Township of Greenwood, County of Wexford, Michigan

Class: RESIDENTIAL-VACANT Zoning:

School: MANTON CONSOLIDATED SCHOOLS

P.R.E. 0%

:

2024 Est TCV 14,455

	Improved		Vacant
		X	

	Public Improvements
X	Dirt Road
X	Gravel Road
	Paved Road
	Storm Sewer
	Sidewalk
	Water
	Sewer
X	Electric
	Gas
	Curb
	Street Lights
	Standard Utilities
	Underground Utils.

	Topography of Site
	Level
X	Rolling
X	Low
	High
	Landscaped
X	Swamp
X	Wooded
	Pond
	Waterfront
	Ravine
	Wetland
	Flood Plain
X	OPEN/PINES

Who	When	What
GLA	05/11/2020	INSPECTION
GLA	07/10/2019	INSPECTION
GLA	07/10/2019	INSPECTION

Building Permit(s)	Date	Number	Status
RESIDENTIAL - REMODEL	02/14/2005	PM8295	
RESIDENTIAL - REMODEL	11/19/2004	PM8130	
RESIDENTIAL - REMODEL	10/23/2001	PM5422	
RESIDENTIAL - REMODEL	10/10/2001	PM5358	

Land Value Estimates for Land Table 4010.LAND VALUES

Description	Frontage	Depth	* Factors * Front	Depth	Rate	%Adj.	Reason	Value
ACREAGE			1.685 Acres		8,579	100		14,455
ROW			0.315 Acres		0	100		0
			2.00 Total Acres		Total Est. Land Value =			14,455

Year	Land Value	Building Value	Assessed Value	Board of Review	Tribunal/ Other	Taxable Value
2024	7,200	0	7,200			4,410C
2023	4,900	0	4,900			4,200C
2022	4,000	0	4,000			4,000S
2021	4,600	0	4,600			4,600S

*** Information herein deemed reliable but not guaranteed***

Parcel Number: 2410-35-4201 Jurisdiction: GREENWOOD TWP County: WEXFORD Printed on 02/15/2024

Grantor	Grantee	Sale Price	Sale Date	Inst. Type	Terms of Sale	Liber & Page	Verified By	Prcnt. Trans.

Property Address
4704 E 12 1/2 RD

Owner's Name/Address
SCHMITT, MICHAEL C. & DEBRA L. 4704 E 12 1/2 RD MANTON MI 49663

Tax Description
NW 1/4 OF SE 1/4 40 A. GW. SEC. 35 T24N R10W -MANTON-

Comments/Influences

The Equalizer. Copyright (c) 1999 - 2009.
Licensed To: Township of Greenwood, County of Wexford, Michigan

Class: RESIDENTIAL-IMPROV Zoning:

School: MANTON CONSOLIDATED SCHOOLS

P.R.E. 100% / /

:

2024 Est TCV 373,222 TCV/TFA: 127.99

Building Permit(s)	Date	Number	Status

X	Improved		Vacant

	Public Improvements
	Dirt Road
X	Gravel Road
	Paved Road
	Storm Sewer
	Sidewalk
	Water
	Sewer
X	Electric
	Gas
	Curb
	Street Lights
	Standard Utilities
	Underground Utils.

	Topography of Site
	Level
X	Rolling
X	Low
	High
	Landscaped
	Swamp
X	Wooded
	Pond
	Waterfront
	Ravine
	Wetland
	Flood Plain
X	OPEN/PINES

Who	When	What
GLA	05/11/2020	INSPECTION
GLA	07/10/2019	INSPECTION
GLA	07/10/2019	INSPECTION

Land Value Estimates for Land Table 4010.LAND VALUES

Description	Frontage	Depth	* Factors * Front	Depth	Rate	%Adj.	Reason	Value
ACREAGE			39.000 Acres		2,722	100		106,158
ROW			1.000 Acres		0	100		0
			40.00 Total Acres		Total Est. Land Value =			106,158

Land Improvement Cost Estimates

Description	Rate	Size	% Good	Cash Value
D/W/P: 4in Concrete	7.01	1080	45	3,407
Wood Frame	25.17	192	42	2,030
Total Estimated Land Improvements True Cash Value =				5,437

Year	Land Value	Building Value	Assessed Value	Board of Review	Tribunal/ Other	Taxable Value
2024	53,100	133,500	186,600			88,569C
2023	47,000	110,100	157,100			84,352C
2022	37,400	93,800	131,200			80,336C
2021	33,300	95,500	128,800			77,770C

*** Information herein deemed reliable but not guaranteed***

Building Type

X	Single Family
	Mobile Home
	Town Home
	Duplex
	A-Frame
X	Wood Frame

Building Style: PLAIN

Yr Built	Remodeled
1986	0

Condition: Good

Room List

	Basement
	1st Floor
	2nd Floor
	Bedrooms

(1) Exterior

	Wood/Shingle
X	Aluminum/Vinyl
	Brick
X	Insulation

(2) Windows

X	Many Avg. Few	X	Large Avg. Small

	Wood Sash
	Metal Sash
X	Vinyl Sash
	Double Hung
	Horiz. Slide
	Casement
	Double Glass
	Patio Doors
X	Storms & Screens

(3) Roof

X	Gable		Gambrel
	Hip		Mansard
	Flat		Shed

X	Asphalt Shingle

Chimney:

(3) Roof (cont.)

	Eavestrough
X	Insulation
0	Front Overhang
0	Other Overhang

(4) Interior

X	Drywall		Plaster
	Paneled		Wood T&G

Trim & Decoration

	Ex	X	Ord		Min

Size of Closets

	Lg	X	Ord		Small

Doors:		Solid	X	H.C.	

(5) Floors

Kitchen:
Other: Linoleum
Other: Carpeted

(6) Ceilings

X	Drywall

(7) Excavation

Basement: 1458 S.F.
Crawl: 0 S.F.
Slab: 0 S.F.
Height to Joists: 0.0

(8) Basement

	Conc. Block
	Poured Conc.
	Stone
	Treated Wood
	Concrete Floor

(9) Basement Finish

	Recreation	SF
1938	Living	SF
1	Walkout Doors (B)	
	No Floor	SF
	Walkout Doors (A)	

(10) Floor Support

Joists:
Unsupported Len:
Cntr.Sup:

(11) Heating/Cooling

X	Gas		Oil		Elec.
	Wood		Coal		Steam

	Forced Air w/o Ducts
X	Forced Air w/ Ducts
	Forced Hot Water
	Electric Baseboard
	Elec. Ceil. Radiant
	Radiant (in-floor)
	Electric Wall Heat
	Space Heater
	Wall/Floor Furnace
	Forced Heat & Cool
	Heat Pump
	No Heating/Cooling

	Central Air
	Wood Furnace

(12) Electric

150	Amps Service

No./Qual. of Fixtures

	Ex.	X	Ord.		Min

No. of Elec. Outlets

	Many	X	Ave.		Few

(13) Plumbing

2	Average Fixture(s)
	3 Fixture Bath
	2 Fixture Bath
	Softener, Auto
	Softener, Manual
	Solar Water Heat
	No Plumbing
	Extra Toilet
	Extra Sink
	Separate Shower
	Ceramic Tile Floor
	Ceramic Tile Wains
	Ceramic Tub Alcove
	Vent Fan

(14) Water/Sewer

	Public Water
	Public Sewer
1	Water Well
1	1000 Gal Septic
	2000 Gal Septic

Lump Sum Items:

(15) Built-ins

	Appliance Allow.
	Cook Top
	Dishwasher
	Garbage Disposal
	Bath Heater
	Vent Fan
	Hot Tub
	Unvented Hood
	Vented Hood
	Intercom
	Jacuzzi Tub
	Jacuzzi repl.Tub
	Oven
	Microwave
	Standard Range
	Self Clean Range
	Sauna
	Trash Compactor
	Central Vacuum
	Security System

(15) Fireplaces

	Interior 1 Story
	Interior 2 Story
	2nd/Same Stack
	Two Sided
	Exterior 1 Story
1	Exterior 2 Story
	Prefab 1 Story
	Prefab 2 Story
	Heat Circulator
	Raised Hearth
	Wood Stove
	Direct-Vented Gas

Class: CD
Effec. Age: 54
Floor Area: 2,916
Total Base New : 438,517 E.C.F.
Total Depr Cost: 201,717 X 1.297
Estimated T.C.V: 261,627

(16) Porches/Decks

Area	Type
834	CCP (1 Story)
432	CCP (1 Story)
168	Treated Wood

(17) Garage

Year Built:
Car Capacity:
Class: CD
Exterior: Siding
Brick Ven.: 0
Stone Ven.: 0
Common Wall: 1 Wall
Foundation: 18 Inch
Finished ?:
Auto. Doors: 0
Mech. Doors: 0
Area: 624
% Good: 0
Storage Area: 0
No Conc. Floor: 0

Bsmnt Garage:

Carport Area:
Roof:

Cost Est. for Res. Bldg: 1 Single Family PLAIN Cls CD Blt 1986
(11) Heating System: Forced Air w/ Ducts
Ground Area = 1458 SF Floor Area = 2916 SF.
Phy/Ab.Phy/Func/Econ/Comb. % Good=46/100/100/100/46
Building Areas

Stories	Exterior	Foundation	Size	Cost New	Depr. Cost
2 Story	Siding	Basement	1,458		
			Total:	295,805	136,070
Other Additions/Adjustments					
Basement Living Area			1938	65,252	30,016
Basement, Outside Entrance, Below Grade			1	2,176	1,001
Plumbing					
3 Fixture Bath			1	3,887	1,788
Water/Sewer					
1000 Gal Septic			1	4,582	2,108
Water Well, 100 Feet			1	5,680	2,613
Porches					
CCP (1 Story)			432	9,677	4,451
CCP (1 Story)			834	21,709	9,986
Deck					
Treated Wood			168	3,637	1,673
Garages					
Class: CD Exterior: Siding Foundation: 18 Inch (Unfinished)					
Base Cost			624	21,072	9,693
Common Wall: 1 Wall			1	-2,060	-948
Fireplaces					
Exterior 2 Story			1	7,100	3,266
			Totals:	438,517	201,717

Notes:
ECF (RESIDENTIAL) 1.297 => TCV: 261,627

*** Information herein deemed reliable but not guaranteed***

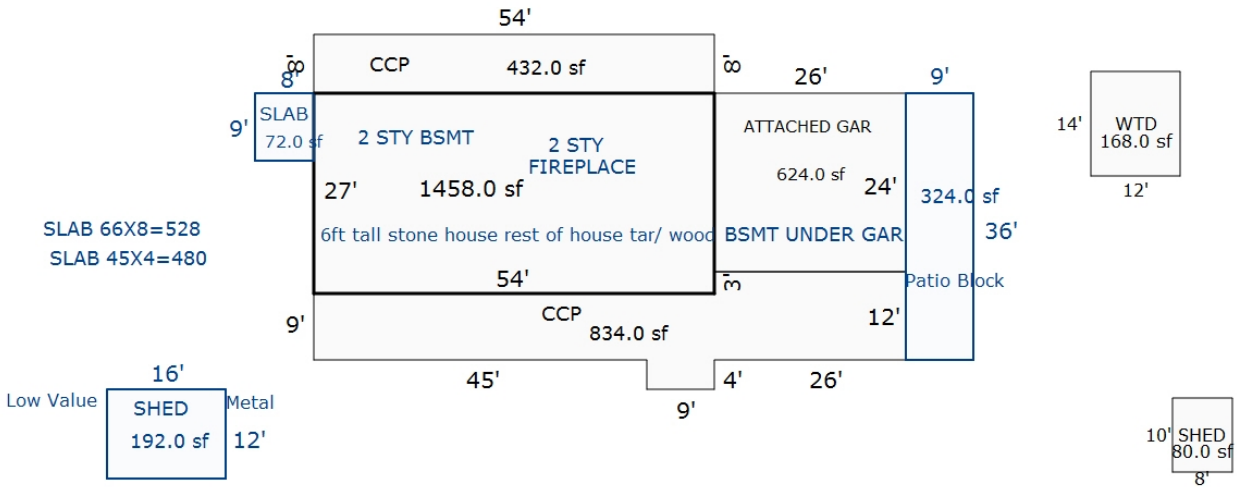

Sketch by Apex Sketch

*** Information herein deemed reliable but not guaranteed***

Parcel Number: 2410-35-4302 Jurisdiction: GREENWOOD TWP County: WEXFORD Printed on 02/15/2024

Grantor	Grantee	Sale Price	Sale Date	Inst. Type	Terms of Sale	Liber & Page	Verified By	Prcnt. Trans.
KONN, AARON A & SUZANNE M	KONN AARON A	0	06/30/2023	QC	06-COURT JUDGEMENT	695/2182	DEED	0.0
RUSH, ROBERT PETER	KONN, AARON A & SUZANNE M	31,000	08/02/2018	WD	03-ARM'S LENGTH	683/599	DEED	100.0
HOOVER, ROBERT P & JOAN L	RUSH, EDWARD J & JEAN M	0	09/06/1989	QC	21-NOT USED/OTHER	683/598	DEED	0.0

Property Address

4545 E 14 RD

Owner's Name/Address

KONN AARON A
11981 JOSHUA DR
GRAND HAVEN MI 49417

Tax Description

SW 1/4 OF SW 1/4 OF SE 1/4 --10.57 A M/L-- GW. SEC. 35 T24N R10W -MANTON-

Comments/Influences

Class: RESIDENTIAL-VACANT Zoning:

School: MANTON CONSOLIDATED SCHOOLS

P.R.E. 0%

:

2024 Est TCV 46,373

Building Permit(s)	Date	Number	Status

	Improved	X	Vacant

	Public Improvements
X	Dirt Road
X	Gravel Road
	Paved Road
	Storm Sewer
	Sidewalk
	Water
	Sewer
X	Electric
	Gas
	Curb
	Street Lights
	Standard Utilities
	Underground Utils.

	Topography of Site
	Level
X	Rolling
X	Low
	High
	Landscaped
	Swamp
	Wooded
	Pond
	Waterfront
	Ravine
	Wetland
	Flood Plain
X	OPEN

Who	When	What
GLA	05/11/2020	INSPECTION
GLA	07/10/2019	INSPECTION
GLA	07/10/2019	INSPECTION

Land Value Estimates for Land Table 4010.LAND VALUES

Description	Frontage	Depth	* Factors * Front	Depth	Rate	%Adj.	Reason	Value
	660.00	0.00	1.0000	1.0000	0	100		0
ACREAGE			10.070 Acres		4,605	100		46,373
ROW			0.500 Acres		0	100		0
660 Actual Front Feet, 10.57 Total Acres							Total Est. Land Value =	46,373

Year	Land Value	Building Value	Assessed Value	Board of Review	Tribunal/ Other	Taxable Value
2024	23,200	0	23,200			13,755C
2023	13,100	0	13,100			13,100S
2022	14,700	0	14,700			13,020C
2021	14,700	0	14,700			12,605C

The Equalizer. Copyright (c) 1999 - 2009.
Licensed To: Township of Greenwood, County of Wexford, Michigan

*** Information herein deemed reliable but not guaranteed***

Parcel Number: 2410-35-4401 Jurisdiction: GREENWOOD TWP County: WEXFORD Printed on 02/15/2024

Grantor	Grantee	Sale Price	Sale Date	Inst. Type	Terms of Sale	Liber & Page	Verified By	Prcnt. Trans.
THOMAS, WALTER G. JR.	THOMAS, WALTER JR & KATHEI	100	10/17/2022	QC	18-LIFE ESTATE	694/458	DEED	0.0

Property Address	Class: RESIDENTIAL-IMPROV	Zoning:	Building Permit(s)	Date	Number	Status
4881 E 14 RD	School: MANTON CONSOLIDATED SCHOOLS					
Owner's Name/Address	P.R.E. 100% / /					
THOMAS, WALTER JR & KATHERINE J LE 4881 E 14 RD MANTON MI 49663	:					
	2024 Est TCV 252,057 TCV/TFA: 181.08					

X	Improved		Vacant

	Public Improvements
	Dirt Road
X	Gravel Road
	Paved Road
	Storm Sewer
	Sidewalk
	Water
	Sewer
X	Electric
	Gas
	Curb
	Street Lights
	Standard Utilities
	Underground Utils.

	Topography of Site
	Level
X	Rolling
X	Low
X	High
	Landscaped
X	Swamp
X	Wooded
	Pond
	Waterfront
	Ravine
	Wetland
	Flood Plain
X	OPEN/PINES

Land Value Estimates for Land Table 4010.LAND VALUES

Description	Frontage	Depth	* Factors * Front	Depth	Rate	%Adj.	Reason	Value
	1320.00	0.00	1.0000	1.0000	0	100		0
ACREAGE			38.000 Acres		2,722	100		103,436
ROW			2.000 Acres		0	100		0
1320 Actual Front Feet, 40.00 Total Acres							Total Est. Land Value =	103,436

Tax Description

SE 1/4 OF SE 1/4 40 A. GW. SEC. 35 T24N R10W-MANTON-

Comments/Influences

Who	When	What
GLA	05/11/2020	INSPECTION
GLA	07/10/2019	INSPECTION
GLA	07/10/2019	INSPECTION

Year	Land Value	Building Value	Assessed Value	Board of Review	Tribunal/ Other	Taxable Value
2024	51,700	74,300	126,000			33,870C
2023	45,900	61,000	106,900			32,258C
2022	42,000	51,700	93,700			30,722C
2021	37,900	52,600	90,500			29,741C

The Equalizer. Copyright (c) 1999 - 2009.
Licensed To: Township of Greenwood, County of Wexford, Michigan

*** Information herein deemed reliable but not guaranteed***

Building Type

X	Single Family
	Mobile Home
	Town Home
	Duplex
	A-Frame
X	Wood Frame

Building Style: PLAIN

Yr Built	Remodeled
1988	0

Condition: Good

Room List

	Basement
	1st Floor
	2nd Floor
	Bedrooms

(1) Exterior

X	Wood/Shingle
	Aluminum/Vinyl
	Brick
X	Insulation

(2) Windows

	Many		Large
X	Avg.	X	Avg.
	Few		Small

X	Wood Sash
	Metal Sash
	Vinyl Sash
	Double Hung
	Horiz. Slide
	Casement
	Double Glass
	Patio Doors
X	Storms & Screens

(3) Roof

X	Gable		Gambrel
	Hip		Mansard
	Flat		Shed

X	Asphalt Shingle

Chimney:

(3) Roof (cont.)

	Eavestrough
X	Insulation
0	Front Overhang
0	Other Overhang

(4) Interior

X	Drywall		Plaster
	Paneled		Wood T&G

Trim & Decoration

	Ex	X	Ord		Min

Size of Closets

	Lg	X	Ord		Small

Doors:		Solid	X	H.C.	

(5) Floors

Kitchen:
Other: Linoleum
Other: Carpeted

(6) Ceilings

X	Drywall		

(7) Excavation

Basement: 0 S.F.
Crawl: 1008 S.F.
Slab: 0 S.F.
Height to Joists: 0.0

(8) Basement

	Conc. Block
	Poured Conc.
	Stone
	Treated Wood
	Concrete Floor

(9) Basement Finish

	Recreation SF
	Living SF
	Walkout Doors (B)
	No Floor SF
	Walkout Doors (A)

(10) Floor Support

Joists:
Unsupported Len:
Cntr.Sup:

(11) Heating/Cooling

X	Gas		Oil		Elec.
	Wood		Coal		Steam

	Forced Air w/o Ducts
X	Forced Air w/ Ducts
	Forced Hot Water
	Electric Baseboard
	Elec. Ceil. Radiant
	Radiant (in-floor)
	Electric Wall Heat
	Space Heater
	Wall/Floor Furnace
	Forced Heat & Cool
	Heat Pump
	No Heating/Cooling

	Central Air
	Wood Furnace

(12) Electric

150	Amps Service

No./Qual. of Fixtures

	Ex.	X	Ord.		Min

No. of Elec. Outlets

	Many	X	Ave.		Few

(13) Plumbing

1	Average Fixture(s)
	3 Fixture Bath
	2 Fixture Bath
	Softener, Auto
	Softener, Manual
	Solar Water Heat
	No Plumbing
	Extra Toilet
	Extra Sink
	Separate Shower
	Ceramic Tile Floor
	Ceramic Tile Wains
	Ceramic Tub Alcove
	Vent Fan

(14) Water/Sewer

	Public Water
	Public Sewer
1	Water Well
1	1000 Gal Septic
	2000 Gal Septic

Lump Sum Items:

(15) Built-ins

	Appliance Allow.
	Cook Top
	Dishwasher
	Garbage Disposal
	Bath Heater
	Vent Fan
	Hot Tub
	Unvented Hood
	Vented Hood
	Intercom
	Jacuzzi Tub
	Jacuzzi repl.Tub
	Oven
	Microwave
	Standard Range
	Self Clean Range
	Sauna
	Trash Compactor
	Central Vacuum
	Security System

(15) Fireplaces

	Interior 1 Story
	Interior 2 Story
	2nd/Same Stack
	Two Sided
	Exterior 1 Story
	Exterior 2 Story
	Prefab 1 Story
	Prefab 2 Story
	Heat Circulator
	Raised Hearth
	Wood Stove
	Direct-Vented Gas

Class: CD
Effec. Age: 48
Floor Area: 1,392
Total Base New : 222,442 E.C.F.
Total Depr Cost: 114,589 X 1.297
Estimated T.C.V: 148,621

(16) Porches/Decks

Area	Type
100	WGEP (1 Story)
160	WCP (1 Story)
420	4in Concrete

(17) Garage

Year Built:
Car Capacity:
Class: D
Exterior: Pole
Brick Ven.: 0
Stone Ven.: 0
Common Wall: Detache
Foundation: 18 Inch
Finished ?:
Auto. Doors: 0
Mech. Doors: 0
Area: 504
% Good: 42
Storage Area: 0
No Conc. Floor: 504

Bsmnt Garage:

Carport Area:
Roof:

Cost Est. for Res. Bldg: 1 Single Family PLAIN Cls CD Blt 1988
(11) Heating System: Forced Air w/ Ducts
Ground Area = 1008 SF Floor Area = 1392 SF.
Phy/Ab.Phy/Func/Econ/Comb. % Good=52/100/100/100/52
Building Areas

Stories	Exterior	Foundation	Size	Cost New	Depr. Cost	
1 Story	Pine Logs	Crawl Space	240			
1.5 Story	Pine Logs	Crawl Space	768			
			Total:	151,189	78,618	
Other Additions/Adjustments						
Water/Sewer						
1000 Gal Septic			1	4,582	2,383	
Water Well, 100 Feet			1	5,680	2,954	
Porches						
WGEP (1 Story)			100	8,895	4,625	
WCP (1 Story)			160	6,243	3,246	
4in Concrete			420	3,108	1,616	
Garages						
Class: D Exterior: Pole (Unfinished)						
Base Cost			504	13,628	5,724	*4
No Concrete Floor			504	-2,827	-1,187	
Class: CD Exterior: Pole (Unfinished)						
Base Cost			1440	31,320	16,286	
Local Cost Items						
SHED			80	624	324	
			Totals:	222,442	114,589	

Notes:

ECF (RESIDENTIAL) 1.297 => TCV: 148,621

*** Information herein deemed reliable but not guaranteed***

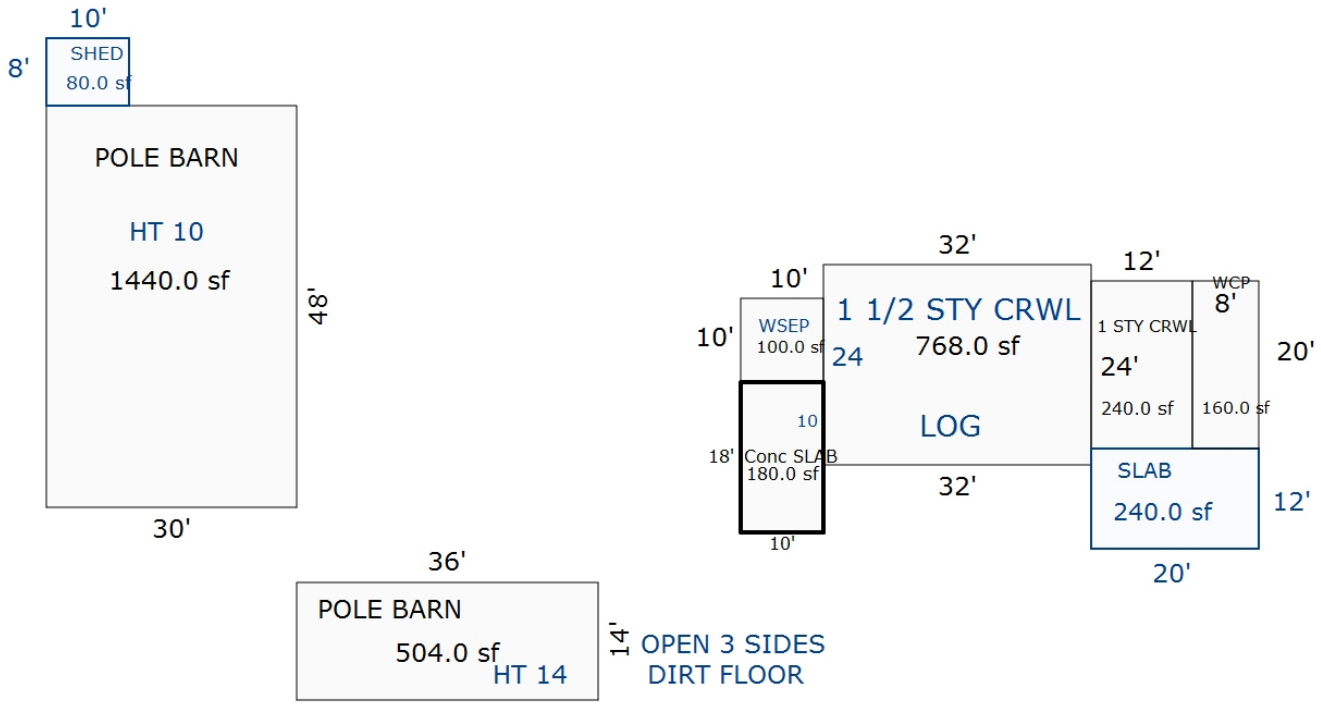

Sketch by Apex Sketch

*** Information herein deemed reliable but not guaranteed***

Parcel Number: 2410-36-1101-02 Jurisdiction: GREENWOOD TWP County: WEXFORD Printed on 02/15/2024

Grantor	Grantee	Sale Price	Sale Date	Inst. Type	Terms of Sale	Liber & Page	Verified By	Prcnt. Trans.
BAKER, ALAN & CYNTHIA		0	03/24/2022	OTH	04-BUYERS INTEREST IN A L	692/1758	DEED	0.0
THOMPSON, HIRAM N & SHERRY	BAKER, ALAN & CYNTHIA	25,000	05/05/2020	LC	03-ARM'S LENGTH	6871/241	DEED	100.0

Property Address

5830 E 12 RD

Owner's Name/Address

BAKER, ALAN & CYNTHIA
5830 E 12 RD
MANTON MI 49663

Tax Description

N 240 FT OF W 750 FT OF NE 1/4 OF NE 1/4 & S 96 FT OF N 336 FT OF E 335 FT OF W 750 FT OF NE 1/4 OF NE 1/4 4.65 AC M/L GW SEC 36 T24N R10W -MANTON- COMBINED ON 12/06/2013 FROM 2410-36-1104, 2410-36-1101;
SPLIT FROM 2410-36-1101-01;
LINE ADJUSTMENT IN 2020...

Comments/Influences

Split/Comb. on 01/28/2020 completed 01/28/2020 LINDA ;
Parent Parcel(s): 2410-36-1101-01;
Child Parcel(s): 2410-36-1101-02, 2410-36-1101-03;

The Equalizer. Copyright (c) 1999 - 2009. Licensed To: Township of Greenwood, County of Wexford, Michigan

Class: RESIDENTIAL-IMPROV Zoning:

School: MANTON CONSOLIDATED SCHOOLS

P.R.E. 100% 10/22/2020

:

2024 Est TCV 66,939 TCV/TFA: 55.05

Building Permit(s)	Date	Number	Status

X Improved | Vacant

Public Improvements

- Dirt Road
- Gravel Road
- Paved Road
- Storm Sewer
- Sidewalk
- Water
- Sewer
- Electric
- Gas
- Curb
- Street Lights
- Standard Utilities
- Underground Utils.

Topography of Site

- Level
- Rolling
- Low
- High
- Landscaped
- Swamp
- Wooded
- Pond
- Waterfront
- Ravine
- Wetland
- Flood Plain

Who	When	What
GLA	05/11/2020	INSPECTION
GLA	07/10/2019	INSPECTION

Land Value Estimates for Land Table 4010.LAND VALUES

Description	Frontage	Depth	* Factors * Front	Depth	Rate	%Adj.	Reason	Value
ACREAGE			4.650 Acres		5,087	100		23,656
			4.65 Total Acres		Total Est. Land Value =			23,656

Year	Land Value	Building Value	Assessed Value	Board of Review	Tribunal/ Other	Taxable Value
2024	11,800	21,700	33,500			23,915C
2023	10,300	17,400	27,700			22,777C
2022	7,300	14,600	21,900			21,693C
2021	8,500	12,500	21,000			21,000S

*** Information herein deemed reliable but not guaranteed***

Building Type

	Single Family
X	Mobile Home
	Town Home
	Duplex
	A-Frame

X	Wood Frame

Building Style: SWT/DWT

Yr Built	Remodeled
2001	0

Condition: Good

Room List

	Basement
	1st Floor
	2nd Floor
	Bedrooms

(1) Exterior

	Wood/Shingle
X	Aluminum/Vinyl
	Brick
X	Insulation

(2) Windows

	Many		Large
X	Avg.	X	Avg.
	Few		Small

	Wood Sash
	Metal Sash
X	Vinyl Sash
	Double Hung
	Horiz. Slide
	Casement
	Double Glass
	Patio Doors
X	Storms & Screens

(3) Roof

X	Gable		Gambrel
	Hip		Mansard
	Flat		Shed

X	Asphalt Shingle

Chimney:

(3) Roof (cont.)

	Eavestrough
X	Insulation
0	Front Overhang
0	Other Overhang

(4) Interior

X	Drywall		Plaster
	Paneled		Wood T&G

Trim & Decoration

	Ex	X	Ord		Min

Size of Closets

	Lg	X	Ord		Small

Doors:		Solid	X	H.C.	

(5) Floors

Kitchen:
Other: Linoleum
Other: Carpeted

(6) Ceilings

X	Drywall		

(7) Excavation

Basement: 0 S.F.
Crawl: 0 S.F.
Slab: 0 S.F.
Height to Joists: 0.0

(8) Basement

	Conc. Block
	Poured Conc.
	Stone
	Treated Wood
	Concrete Floor

(9) Basement Finish

	Recreation SF
	Living SF
	Walkout Doors (B)
	No Floor SF
	Walkout Doors (A)

(10) Floor Support

Joists:
Unsupported Len:
Cntr.Sup:

(11) Heating/Cooling

X	Gas		Oil		Elec.
	Wood		Coal		Steam

X	Forced Warm Air
	Wall Furnace
	Warm & Cool Air
	Heat Pump

	Central Air
	Wood Furnace

(12) Electric

150	Amps Service

No./Qual. of Fixtures

	Ex.	X	Ord.		Min

No. of Elec. Outlets

	Many	X	Ave.		Few

(13) Plumbing

	Average Fixture(s)
1	3 Fixture Bath
	2 Fixture Bath
	Softener, Auto
	Softener, Manual
	Solar Water Heat
	No Plumbing
	Extra Toilet
	Extra Sink
	Separate Shower
	Ceramic Tile Floor
	Ceramic Tile Wains
	Ceramic Tub Alcove
	Vent Fan

(14) Water/Sewer

	Public Water
	Public Sewer
1	Water Well
1	1000 Gal Septic
	2000 Gal Septic

Lump Sum Items:

(15) Built-ins

	Appliance Allow.
	Cook Top
	Dishwasher
	Garbage Disposal
	Bath Heater
	Vent Fan
	Hot Tub
	Unvented Hood
	Vented Hood
	Intercom
	Jacuzzi Tub
	Jacuzzi repl.Tub
	Oven
	Microwave
	Standard Range
	Self Clean Range
	Sauna
	Trash Compactor
	Central Vacuum
	Security System

(15) Fireplaces

	Interior 1 Story
	Interior 2 Story
	2nd/Same Stack
	Two Sided
	Exterior 1 Story
	Exterior 2 Story
	Prefab 1 Story
	Prefab 2 Story
	Heat Circulator
	Raised Hearth
	Wood Stove
	Direct-Vented Gas

Class: Fair
Effec. Age: 20
Floor Area:
Total Base New : 72,714 E.C.F.
Total Depr Cost: 33,372 X 1.297
Estimated T.C.V: 43,283

(16) Porches/Decks

Area	Type
18	WPP

(17) Garage

Year Built:
Car Capacity:
Class:
Exterior:
Brick Ven.:
Stone Ven.:
Common Wall:
Foundation:
Finished ?:
Auto. Doors:
Mech. Doors:
Area:
% Good:
Storage Area:
No Conc. Floor:

Bsmnt Garage:

Carport Area:
Roof:

Cost Est. for Res. Bldg: 1 Mobile Home SWT/DWT Cls Fair Blt 2001
(11) Heating System: Wall Furnace
Ground Area = 1216 SF Floor Area = 1216 SF.
Phy/Ab.Phy/Func/Econ/Comb. % Good=46/100/100/100/46
Building Areas

Type	Ext. Walls	Roof/Fnd.	Size	Cost New	Depr. Cost	
Main Home	Siding	Comp.Shingle	1216			
			Total:	57,934	26,650	
Other Additions/Adjustments						
Skirting, Metal or Vinyl, Vertical			184	2,052	944	
Water/Sewer						
1000 Gal Septic			1	4,582	2,108	
Water Well, 100 Feet			1	5,680	2,613	
Porches						
WPP			18	906	417	
Local Cost Items						
SHED			136	1,061	435	*4
SHED #2			64	499	205	*4
			Totals:	72,714	33,372	

Notes:
ECF (RESIDENTIAL) 1.297 => TCV: 43,283

*** Information herein deemed reliable but not guaranteed***

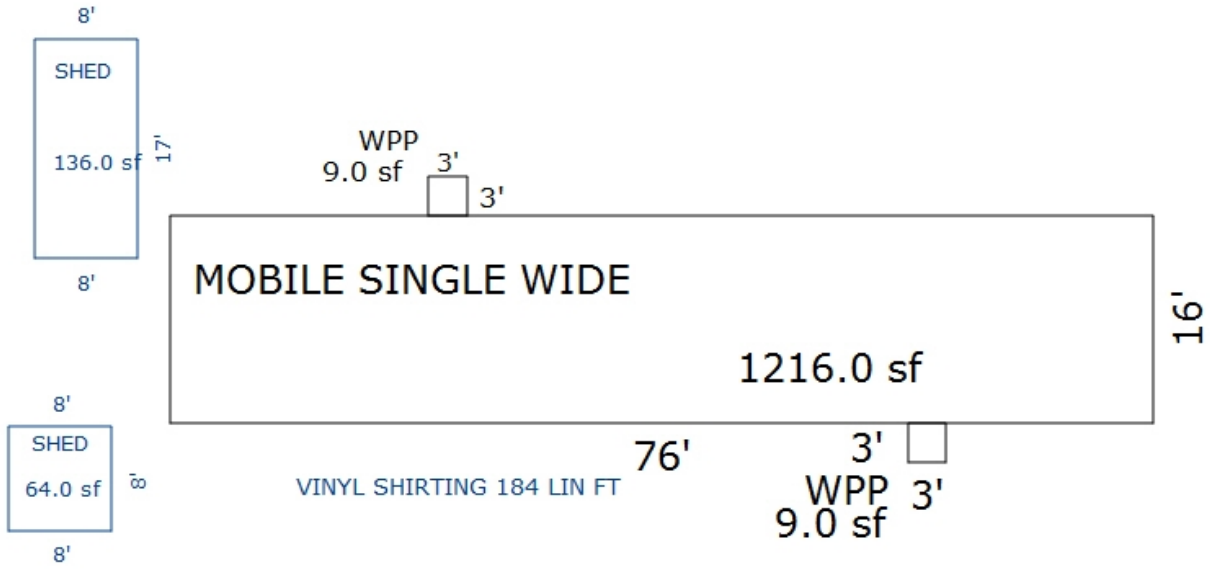

Sketch by Apex Sketch

*** Information herein deemed reliable but not guaranteed***

Parcel Number: 2410-36-1101-03 Jurisdiction: GREENWOOD TWP County: WEXFORD Printed on 02/15/2024

Grantor	Grantee	Sale Price	Sale Date	Inst. Type	Terms of Sale	Liber & Page	Verified By	Prcnt. Trans.
THOMPSON, HIRAM N & SHERRY	THOMPSON, JAMES	0	02/02/2022	QC	09-FAMILY	692/429	DEED	0.0

Property Address

6757 N 37 RD

Owner's Name/Address

THOMPSON, JAMES
2620 S RAVENNA RD
RAVENNA MI 49451

Tax Description

NE 1/4 OF NE 1/4 & NE 1/4 OF SE 1/4 OF NE 1/4 EXC THAT PART LYING E OF HWY & EXC S 96 FT OF N 336 FT OF E 335 FT OF W 750 FT OF NE 1/4 OF NE 1/4 37.7 A M/L GW SEC 36 T24N R10W -MANTON- COMBINED ON 12/06/2013 FROM 2410-36-1104, 2410-36-1101;
SPLIT ON 01/28/2020 FROM 2410-36-1101-01;
LINE ADJUSTMENT IN 2020...

Comments/Influences

Split/Comb. on 01/28/2020 completed

The Equalizer. Copyright (c) 1999 - 2009.
Licensed To: Township of Greenwood, County of Wexford, Michigan

Class: RESIDENTIAL-VACANT Zoning:
School: MANTON CONSOLIDATED SCHOOLS
P.R.E. 0%
:
2024 Est TCV 102,647

Building Permit(s)	Date	Number	Status
RESIDENTIAL - NEW	08/23/2023	PB23-0226	COMPLETE

Improved | X | Vacant

Public Improvements

Dirt Road
Gravel Road
Paved Road
Storm Sewer
Sidewalk
Water
Sewer
Electric
Gas
Curb
Street Lights
Standard Utilities
Underground Utils.

Topography of Site

Level
Rolling
Low
High
Landscaped
Swamp
Wooded
Pond
Waterfront
Ravine
Wetland
Flood Plain

Who	When	What
JB	10/23/2023	INSPECTION
GLA	05/11/2020	INSPECTION
GLA	07/10/2019	INSPECTION

Land Value Estimates for Land Table 4010.LAND VALUES

Description	Frontage	Depth	* Factors * Front	Depth	Rate	%Adj.	Reason	Value
ACREAGE			37.710 Acres		2,722	100		102,647
			37.71 Total Acres		Total Est. Land Value =			102,647

Year	Land Value	Building Value	Assessed Value	Board of Review	Tribunal/ Other	Taxable Value
2024	51,300	0	51,300			36,071C
2023	45,600	0	45,600			34,354C
2022	36,500	0	36,500			32,719C
2021	32,400	0	32,400			31,674C

*** Information herein deemed reliable but not guaranteed***

Parcel Number: 2410-36-1102 Jurisdiction: GREENWOOD TWP County: WEXFORD Printed on 02/15/2024

Grantor	Grantee	Sale Price	Sale Date	Inst. Type	Terms of Sale	Liber & Page	Verified By	Prcnt. Trans.
CUDMORE, RICHARD A	CUDMORE, RICHARD A ETAL	0	05/23/2006	QC	09-FAMILY	588/878	DEED	0.0

Property Address

Owner's Name/Address

CUDMORE, RICHARD A
& MARGARET ETAL
12 HOLLAND AVE
CHATHAM ON N7M2C-7

Tax Description

THAT PART OF NE 1/4 LYING E OF HWY --6.1 A M/L-- GW. SEC. 36 T24N R10W -MANTON-

Comments/Influences

The Equalizer. Copyright (c) 1999 - 2009. Licensed To: Township of Greenwood, County of Wexford, Michigan

Class: RESIDENTIAL-VACANT Zoning:

School: MANTON CONSOLIDATED SCHOOLS

P.R.E. 0%

:

2024 Est TCV 26,342

Building Permit(s)	Date	Number	Status

	Improved	X	Vacant

	Public Improvements
X	Dirt Road
X	Gravel Road
	Paved Road
	Storm Sewer
	Sidewalk
	Water
	Sewer
X	Electric
	Gas
	Curb
	Street Lights
	Standard Utilities
	Underground Utils.

	Topography of Site
	Level
X	Rolling
	Low
	High
	Landscaped
X	Swamp
X	Wooded
	Pond
	Waterfront
	Ravine
	Wetland
	Flood Plain
X	OPEN/PINES

Who	When	What
GLA	05/11/2020	INSPECTION
GLA	07/10/2019	INSPECTION
GLA	07/10/2019	INSPECTION

Land Value Estimates for Land Table 4010.LAND VALUES

Description	Frontage	Depth	* Factors * Front	Depth	Rate	%Adj.	Reason	Value
ACREAGE			5.153 Acres		5,112	100		26,342
			0.947 Acres		0	100		0
			6.10 Total Acres		Total Est. Land Value =			26,342

Year	Land Value	Building Value	Assessed Value	Board of Review	Tribunal/ Other	Taxable Value
2024	13,200	0	13,200			8,489C
2023	10,800	0	10,800			8,085C
2022	7,700	0	7,700			7,700S
2021	8,800	0	8,800			7,954C

*** Information herein deemed reliable but not guaranteed***

Parcel Number: 2410-36-1201 Jurisdiction: GREENWOOD TWP County: WEXFORD Printed on 02/15/2024

Grantor	Grantee	Sale Price	Sale Date	Inst. Type	Terms of Sale	Liber & Page	Verified By	Prcnt. Trans.

Property Address

Owner's Name/Address

SHEWCHUK, ARTHUR
(ET AL)
15740 PLEASANT
ALLEN PARK MI 48101

Tax Description

E 5/16 OF W 1/2 OF NE 1/4 25 A. GW. SEC. 36 T24N R10W -MANTON-

Comments/Influences

The Equalizer. Copyright (c) 1999 - 2009.
Licensed To: Township of Greenwood, County of Wexford, Michigan

Class: RESIDENTIAL-VACANT Zoning:

School: MANTON CONSOLIDATED SCHOOLS

P.R.E. 0%

:

2024 Est TCV 67,797

Building Permit(s)	Date	Number	Status

	Improved	X	Vacant

	Public Improvements
X	Dirt Road
	Gravel Road
	Paved Road
	Storm Sewer
	Sidewalk
	Water
	Sewer
X	Electric
	Gas
	Curb
	Street Lights
	Standard Utilities
	Underground Utils.

	Topography of Site
	Level
X	Rolling
X	Low
	High
	Landscaped
X	Swamp
X	Wooded
	Pond
	Waterfront
	Ravine
	Wetland
	Flood Plain
X	OPEN/PINES

Who	When	What
GLA	05/11/2020	INSPECTION
GLA	07/10/2019	INSPECTION
GLA	07/10/2019	INSPECTION

Land Value Estimates for Land Table 4010.LAND VALUES

Description	Frontage	Depth	* Factors * Front	Depth	Rate	%Adj.	Reason	Value
ACREAGE			24.688 Acres		2,746	100		67,797
ROW			0.313 Acres		0	100		0
			25.00 Total Acres		Total Est. Land Value =			67,797

Year	Land Value	Building Value	Assessed Value	Board of Review	Tribunal/ Other	Taxable Value
2024	33,900	0	33,900			11,765C
2023	30,900	0	30,900			11,205C
2022	27,200	0	27,200			10,672C
2021	24,700	0	24,700			10,332C

*** Information herein deemed reliable but not guaranteed***

Parcel Number: 2410-36-1202-01 Jurisdiction: GREENWOOD TWP County: WEXFORD Printed on 02/15/2024

Grantor	Grantee	Sale Price	Sale Date	Inst. Type	Terms of Sale	Liber & Page	Verified By	Prcnt. Trans.
VEENSTRA, JAMES A	KING, THOMAS & KATIE	330,000	08/03/2017	LC	03-ARM'S LENGTH	680 /2406	DEED	100.0

Property Address

5411 E 12 1/2 RD

Owner's Name/Address

KING, THOMAS & KATIE
5411 E 12 1/2 RD
MANTON MI 49663

Tax Description

PT OF SE 1/3 OF NW 1/4 DESC AS COM AT E 1/4 COR OF SD SEC; W 2580.45 FT TO CENTER OF SD SEC & POB; CONT W 805.45 FT N 1334.74 FT ; E 802.50 FT; S 1337.85 FT TO POB. 25 A M/L
. GW. SEC. 36 T24N R10W -MANTON-
SPLIT ON 01/05/2018 INTO 2410-36-1202-01, 2410-36-1202-02;

Comments/Influences

Split/Comb. on 01/05/2018 completed 01/05/2018 JAY ;
Parent Parcel(s): 2410-36-1202;
Child Parcel(s): 2410-36-1202-01, 2410-36-1202-02;

The Equalizer. Copyright (c) 1999 - 2009.
Licensed To: Township of Greenwood, County of Wexford, Michigan

Class: AGRICULTURAL-IMPRO Zoning:

School: MANTON CONSOLIDATED SCHOOLS

P.R.E. 100% 08/25/2017 Qual. Ag.

:

2024 Est TCV 304,660 TCV/TFA: 138.36

Building Permit(s)	Date	Number	Status
RESIDENTIAL - REMODEL	08/03/2005	PE17020	
RESIDENTIAL - REMODEL	08/27/2001	PM5208	
RESIDENTIAL - REMODEL	07/12/2001	PM5093	
RESIDENTIAL - REMODEL	07/11/2001	PE13806	

X Improved | Vacant

Public Improvements

- Dirt Road
- Gravel Road
- Paved Road
- Storm Sewer
- Sidewalk
- Water
- Sewer
- Electric
- Gas
- Curb
- Street Lights
- Standard Utilities
- Underground Utils.

Topography of Site

- Level
- Rolling
- Low
- High
- Landscaped
- Swamp
- Wooded
- Pond
- Waterfront
- Ravine
- Wetland
- Flood Plain

Who	When	What
GLA	05/13/2021	INSPECTION
GLA	07/10/2019	INSPECTION
GLA	07/10/2019	INSPECTION

Land Value Estimates for Land Table 1010.AG

Description	Frontage	Depth	* Factors * Front	Depth	Rate	%Adj.	Reason	Value
AG LAND	20 ACRES		24.38 Acres		2690	100		65,588
AG LAND	ROW		0.62 Acres		0	100		0
			25.00 Total Acres				Total Est. Land Value =	65,588

Land Improvement Cost Estimates

Description	Rate	Size	% Good	Cash Value
D/W/P: 3.5 Concrete	6.19	1847	53	6,059
Total Estimated Land Improvements True Cash Value =				6,059

Year	Land Value	Building Value	Assessed Value	Board of Review	Tribunal/ Other	Taxable Value
2024	32,800	119,500	152,300			124,011C
2023	24,400	109,700	134,100			118,106C
2022	21,900	92,500	114,400			112,482C
2021	20,700	111,100	131,800			108,889C

*** Information herein deemed reliable but not guaranteed***

Building Type

X	Single Family
	Mobile Home
	Town Home
	Duplex
	A-Frame
X	Wood Frame

Building Style: TWO STORY

Yr Built	Remodeled
2002	2005

Condition: Average

Room List

	Basement
	1st Floor
	2nd Floor
	Bedrooms

(1) Exterior

	Wood/Shingle
	Aluminum/Vinyl
	Brick
X	Vinyl
	Insulation

(2) Windows

X	Many Avg. Few	X	Large Avg. Small

	Wood Sash
	Metal Sash
X	Vinyl Sash
X	Double Hung
X	Horiz. Slide
	Casement
	Double Glass
X	Patio Doors
X	Storms & Screens

(3) Roof

X	Gable		Gambrel
	Hip		Mansard
	Flat		Shed

X	Asphalt Shingle

Chimney:

(3) Roof (cont.)

	Eavestrough
	Insulation
0	Front Overhang
0	Other Overhang

(4) Interior

	Drywall		Plaster
	Paneled		Wood T&G

Trim & Decoration

	Ex		Ord		Min

Size of Closets

	Lg		Ord		Small

Doors: | | Solid | | H.C.

(5) Floors

Kitchen:
Other:
Other:

(6) Ceilings

(7) Excavation

Basement: 697 S.F.
Crawl: 1148 S.F.
Slab: 0 S.F.
Height to Joists: 0.0

(8) Basement

	Conc. Block
	Poured Conc.
	Stone
	Treated Wood
	Concrete Floor

(9) Basement Finish

	Recreation	SF
577	Living	SF
1	Walkout Doors (B)	
	No Floor	SF
	Walkout Doors (A)	

(10) Floor Support

Joists:
Unsupported Len:
Cntr.Sup:

(11) Heating/Cooling

X	Gas		Oil		Elec.
	Wood		Coal		Steam

	Forced Air w/o Ducts
	Forced Air w/ Ducts
	Forced Hot Water
	Electric Baseboard
	Elec. Ceil. Radiant
	Radiant (in-floor)
	Electric Wall Heat
	Space Heater
	Wall/Floor Furnace
X	Forced Heat & Cool
	Heat Pump
	No Heating/Cooling

	Central Air
	Wood Furnace

(12) Electric

0	Amps Service

No./Qual. of Fixtures

	Ex.		Ord.		Min

No. of Elec. Outlets

	Many		Ave.		Few

(13) Plumbing

	Average Fixture(s)
2	3 Fixture Bath
	2 Fixture Bath
	Softener, Auto
	Softener, Manual
	Solar Water Heat
	No Plumbing
	Extra Toilet
	Extra Sink
	Separate Shower
	Ceramic Tile Floor
	Ceramic Tile Wains
	Ceramic Tub Alcove
	Vent Fan

(14) Water/Sewer

	Public Water
	Public Sewer
1	Water Well
1	1000 Gal Septic
	2000 Gal Septic

Lump Sum Items:

(15) Built-ins

	Appliance Allow.
	Cook Top
	Dishwasher
	Garbage Disposal
	Bath Heater
	Vent Fan
	Hot Tub
	Unvented Hood
	Vented Hood
	Intercom
	Jacuzzi Tub
	Jacuzzi repl.Tub
	Oven
	Microwave
	Standard Range
	Self Clean Range
	Sauna
	Trash Compactor
	Central Vacuum
	Security System

(15) Fireplaces

	Interior 1 Story
	Interior 2 Story
	2nd/Same Stack
	Two Sided
	Exterior 1 Story
	Exterior 2 Story
	Prefab 1 Story
	Prefab 2 Story
	Heat Circulator
	Raised Hearth
	Wood Stove
	Direct-Vented Gas

Class: C
Effec. Age: 47
Floor Area: 2,202
Total Base New : 417,734 E.C.F.
Total Depr Cost: 221,399 X 0.946
Estimated T.C.V: 209,443

(16) Porches/Decks

Area	Type
260	WCP (1 Story)
192	WGEP (1 Story)
120	WPP
24	WCP (1 Story)
126	CPP
63	WCP (1 Story)
128	Treated Wood

(17) Garage

Year Built:
Car Capacity:
Class: C
Exterior: Pole
Brick Ven.: 0
Stone Ven.: 0
Common Wall: Detache
Foundation: 18 Inch
Finished ?:
Auto. Doors: 0
Mech. Doors: 0
Area: 576
% Good: 0
Storage Area: 0
No Conc. Floor: 0

Bsmnt Garage:

Carport Area:
Roof:

Cost Est. for Res. Bldg: 1 Single Family TWO STORY Cls C Blt 2002
(11) Heating System: Forced Heat & Cool
Ground Area = 1845 SF Floor Area = 2202 SF.
Phy/Ab.Phy/Func/Econ/Comb. % Good=53/100/100/100/53
Building Areas

Stories	Exterior	Foundation	Size	Cost New	Depr. Cost
1.75 Story	Siding	Crawl Space	476		
1 Story	Siding	Crawl Space	672		
1 Story	Siding	Basement	697		
			Total:	282,942	149,959
Other Additions/Adjustments					
Basement Living Area			577	20,835	11,043
Basement, Outside Entrance, Below Grade			1	2,578	1,366
Plumbing					
3 Fixture Bath			1	4,678	2,479
Water/Sewer					
1000 Gal Septic			1	4,899	2,596
Water Well, 100 Feet			1	5,849	3,100
Porches					
WCP (1 Story)			260	9,352	4,957
WGEP (1 Story)			192	14,832	7,861
WPP			120	3,319	1,759
CPP			126	2,492	1,321
WCP (1 Story)			63	3,669	1,945
WCP (1 Story)			24	1,824	967
Deck					
Treated Wood			128	3,110	1,648
Garages					
Class: C Exterior: Pole (Unfinished)					
Base Cost			576	16,831	8,920

<<<<< Calculations too long. See Valuation printout for complete pricing. >>>>>

*** Information herein deemed reliable but not guaranteed***

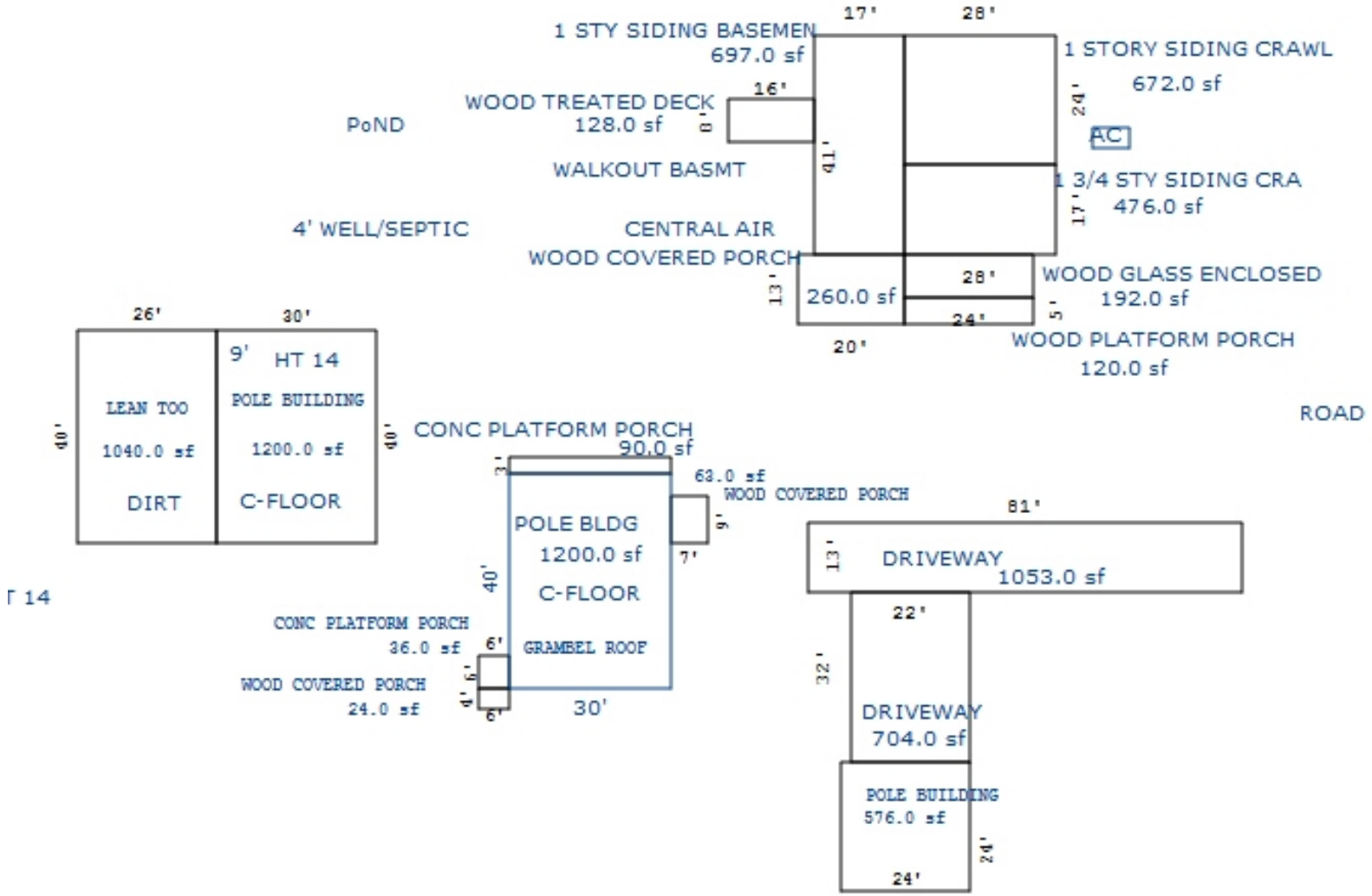

Sketch by Apex Sketch

*** Information herein deemed reliable but not guaranteed***

Building Type	Barn - General Purpose	Farm Implement/Equipment	Farm Implement/Equipment		
Year Built					
Class/Construction	D,Pole	D,Pole	D,Pole		
Quality/Exterior	Average	Low Cost	Low Cost		
# of Walls, Perimeter	4 Wall, 148	4 Wall, 140	Lean-To, 132		
Height	9	12	12		
Heating System	No Heating/Cooling	No Heating/Cooling	No Heating/Cooling		
Length/Width/Area	30 x 44 = 1320	40 x 30 = 1200	40 x 26 = 1040		
Cost New	$ 39,376	$ 5,832	$ 5,169		
Phy./Func./Econ. %Good	47/100/100 47.0	47/100/100 47.0	35/100/100 35.0		
Depreciated Cost	$ 18,507	$ 2,741	$ 1,809		
+ Unit-In-Place Items	$ 1,859	$ 0	$ 0		
Description, Size X Rate X %Good = Cost Itemized -> Unit-In-Place -> Items ->	/A22/UOOCL, 87 X 2.00 X 47 = 117 /A22/U10L, 213 X 12.10 X 47 = 1,741				
E.C.F.	X 0.946	X 0.946	X 0.946		
% Good	47	47	35		
Est. True Cash Value	$ 19,266	$ 2,593	$ 1,711		
Comments:					
Total Estimated True Cash Value of Agricultural Improvements / This Card: 23570 / All Cards: 23570					

*** Information herein deemed reliable but not guaranteed***

Parcel Number: 2410-36-1202-02 Jurisdiction: GREENWOOD TWP County: WEXFORD Printed on 02/15/2024

Grantor	Grantee	Sale Price	Sale Date	Inst. Type	Terms of Sale	Liber & Page	Verified By	Prcnt. Trans.
KING THOMAS & KATIE		0	10/26/2018	WD	16-LC PAYOFF	6832/350	DEED	0.0
VEENSTRA JAMES & MARGARET	KING THOMAS & KATIE	65,000	08/03/2017	LC	03-ARM'S LENGTH	660 /2405	DEED	100.0

Property Address

E 12 1/2 RD

Owner's Name/Address

KING THOMAS & KATIE
5411 E 12 1/2 RD
MANTON MI 49663

Tax Description

W 55 A OF W 1/2 OF NE 1/4 EXC PAR COM 2204.93 FT W OF E 1/4 COR: W 208.71 FT; N 315 FT; E 208.71 FT; S 315 FT TO POB. & EXC PAR COM AT N 1/4 COR: E 895.40 FT; S 778.38 FT; W 895.40 FT; N 778.38 FT TO POB. 37.49 A. GW. SEC. 36 T24N R10W
-MANTON-
SPLIT/ ON 01/05/2018 FROM 2410-36-1202;

Comments/Influences

Split/Comb. on 01/05/2018 completed 01/05/2018 JAY ;
Parent Parcel(s): 2410-36-1202;

The Equalizer. Copyright (c) 1999 - 2009.
Licensed To: Township of Greenwood, County of Wexford, Michigan

Class: AGRICULTURAL-VACAN Zoning:
School: MANTON CONSOLIDATED SCHOOLS
P.R.E. 100% 08/25/2017 Qual. Ag.
:
2024 Est TCV 99,369

Building Permit(s)	Date	Number	Status

Improved | X | Vacant

Public Improvements

Dirt Road
Gravel Road
Paved Road
Storm Sewer
Sidewalk
Water
Sewer
Electric
Gas
Curb
Street Lights
Standard Utilities
Underground Utils.

Topography of Site

Level
Rolling
Low
High
Landscaped
Swamp
Wooded
Pond
Waterfront
Ravine
Wetland
Flood Plain

Who	When	What
GLA	05/11/2020	INSPECTION
GLA	07/10/2019	INSPECTION
GLA	07/10/2019	INSPECTION

Land Value Estimates for Land Table 1010.AG

Description	Frontage	Depth	* Factors * Front	Depth	Rate	%Adj.	Reason	Value
AG LAND	40 ACRES		36.94 Acres		2690	100		99,369
AG LAND	ROW		0.55 Acres		0	100		0
			37.49 Total Acres		Total Est. Land Value =			99,369

Year	Land Value	Building Value	Assessed Value	Board of Review	Tribunal/ Other	Taxable Value
2024	49,700	0	49,700			29,535C
2023	36,900	0	36,900			28,129C
2022	33,200	0	33,200			26,790C
2021	31,400	0	31,400			25,935C

*** Information herein deemed reliable but not guaranteed***

Parcel Number: 2410-36-1203 Jurisdiction: GREENWOOD TWP County: WEXFORD Printed on 02/15/2024

Grantor	Grantee	Sale Price	Sale Date	Inst. Type	Terms of Sale	Liber & Page	Verified By	Prcnt. Trans.
LOUWERS, ERIC M	LOUWERS, ERIC M & BRANDY J	100	08/08/2022	QC	18-LIFE ESTATE	693/1891	DEED	0.0
COX, ARDYS ETAL	LOUWERS, ERIC & BRANDY	28,000	05/28/2003	WD	03-ARM'S LENGTH	489:594	DEED	0.0
COX, JOHN 08%	COX, WARREN L.	8,000	09/15/1986	LC	03-ARM'S LENGTH	303:296	DEED	0.0

Property Address

5600 E 12 RD

Owner's Name/Address

LOUWERS, ERIC M & BRANDY J LE
5600 E 12 RD
MANTON MI 49663

Tax Description

PAR COM AT N 1/4 COR: E 895.40 FT; S 778.38 FT; W 895.40 FT; N 778.38 FT TO POB. --16 A.-- GW. SEC. 36 T24N R10W -MANTON-

Comments/Influences

The Equalizer. Copyright (c) 1999 - 2009. Licensed To: Township of Greenwood, County of Wexford, Michigan

Class: RESIDENTIAL-IMPROV Zoning:

School: MANTON CONSOLIDATED SCHOOLS

P.R.E. 100% 05/01/2008

:

2024 Est TCV 302,493 TCV/TFA: 193.91

Building Permit(s)	Date	Number	Status
Pole Barn	02/22/2023	PB23-0017	ENTERED
OTHER	07/05/2022	PB22-0175	ENTERED
MOBILE HOME	09/05/2007	PP4552	
RESIDENTIAL - NEW	08/28/2007	PM9775	

X	Improved		Vacant

	Public Improvements
	Dirt Road
X	Gravel Road
	Paved Road
	Storm Sewer
	Sidewalk
	Water
	Sewer
X	Electric
	Gas
	Curb
	Street Lights
	Standard Utilities
	Underground Utils.

	Topography of Site
	Level
X	Rolling
X	Low
X	High
	Landscaped
	Swamp
	Wooded
	Pond
	Waterfront
	Ravine
	Wetland
	Flood Plain
X	OPEN

Who	When	What
JB	10/23/2023	INSPECTION
GLA	05/11/2020	INSPECTION
GLA	07/10/2019	INSPECTION

Land Value Estimates for Land Table 4010.LAND VALUES

Description	Frontage	Depth	* Factors * Front	Depth	Rate	%Adj.	Reason	Value
ACREAGE			15.320 Acres		3,200	100		49,024
ROW			0.680 Acres		0	100		0
			16.00 Total Acres		Total Est. Land Value =			49,024

Year	Land Value	Building Value	Assessed Value	Board of Review	Tribunal/ Other	Taxable Value
2024	24,500	126,700	151,200			102,549C
2023	19,900	94,600	114,500			82,238C
2022	17,600	76,100	93,700			74,608C
2021	18,100	77,000	95,100			72,225C

*** Information herein deemed reliable but not guaranteed***

Building Type

X	Single Family
	Mobile Home
	Town Home
	Duplex
	A-Frame
X	Wood Frame

Building Style: PLAIN

Yr Built	Remodeled
2007	0

Condition: Good

Room List

	Basement
	1st Floor
	2nd Floor
	Bedrooms

(1) Exterior

	Wood/Shingle
X	Aluminum/Vinyl
	Brick
X	Insulation

(2) Windows

X	Many Avg. Few	X	Large Avg. Small

	Wood Sash
	Metal Sash
X	Vinyl Sash
	Double Hung
	Horiz. Slide
	Casement
	Double Glass
	Patio Doors
X	Storms & Screens

(3) Roof

X	Gable		Gambrel
	Hip		Mansard
	Flat		Shed

X	Asphalt Shingle

Chimney:

(3) Roof (cont.)

	Eavestrough
X	Insulation
0	Front Overhang
0	Other Overhang

(4) Interior

X	Drywall Paneled		Plaster Wood T&G

Trim & Decoration

	Ex	X	Ord		Min

Size of Closets

	Lg	X	Ord		Small

Doors: | | Solid | X | H.C.

(5) Floors

Kitchen:
Other: Linoleum
Other: Carpeted

(6) Ceilings

X	Drywall

(7) Excavation

Basement: 0 S.F.
Crawl: 1560 S.F.
Slab: 0 S.F.
Height to Joists: 0.0

(8) Basement

	Conc. Block
	Poured Conc.
	Stone
	Treated Wood
	Concrete Floor

(9) Basement Finish

	Recreation SF
	Living SF
	Walkout Doors (B)
	No Floor SF
	Walkout Doors (A)

(10) Floor Support

Joists:
Unsupported Len:
Cntr.Sup:

(11) Heating/Cooling

X	Gas Wood		Oil Coal		Elec. Steam

	Forced Air w/o Ducts
X	Forced Air w/ Ducts
	Forced Hot Water
	Electric Baseboard
	Elec. Ceil. Radiant
	Radiant (in-floor)
	Electric Wall Heat
	Space Heater
	Wall/Floor Furnace
	Forced Heat & Cool
	Heat Pump
	No Heating/Cooling

X	Central Air
	Wood Furnace

(12) Electric

150	Amps Service

No./Qual. of Fixtures

	Ex.	X	Ord.		Min

No. of Elec. Outlets

	Many	X	Ave.		Few

(13) Plumbing

2	Average Fixture(s)
	3 Fixture Bath
	2 Fixture Bath
	Softener, Auto
	Softener, Manual
	Solar Water Heat
	No Plumbing
	Extra Toilet
	Extra Sink
	Separate Shower
	Ceramic Tile Floor
	Ceramic Tile Wains
	Ceramic Tub Alcove
	Vent Fan

(14) Water/Sewer

	Public Water
	Public Sewer
1	Water Well
1	1000 Gal Septic
	2000 Gal Septic

Lump Sum Items:

(15) Built-ins

	Appliance Allow.
	Cook Top
	Dishwasher
	Garbage Disposal
	Bath Heater
	Vent Fan
	Hot Tub
	Unvented Hood
	Vented Hood
	Intercom
	Jacuzzi Tub
	Jacuzzi repl.Tub
	Oven
	Microwave
	Standard Range
	Self Clean Range
	Sauna
	Trash Compactor
	Central Vacuum
	Security System

(15) Fireplaces

	Interior 1 Story
	Interior 2 Story
	2nd/Same Stack
	Two Sided
	Exterior 1 Story
	Exterior 2 Story
	Prefab 1 Story
	Prefab 2 Story
	Heat Circulator
	Raised Hearth
	Wood Stove
	Direct-Vented Gas

Class: CD
Effec. Age: 17
Floor Area: 1,560
Total Base New : 235,998 E.C.F.
Total Depr Cost: 195,427 X 1.297
Estimated T.C.V: 253,469

(16) Porches/Decks

Area	Type
25	WPP
416	WCP (1 Story)

(17) Garage

Year Built: 2023
Car Capacity:
Class: D
Exterior: Pole
Brick Ven.: 0
Stone Ven.: 0
Common Wall: Detache
Foundation: 18 Inch
Finished ?:
Auto. Doors: 1
Mech. Doors: 0
Area: 960
% Good: 0
Storage Area: 0
No Conc. Floor: 0

Bsmnt Garage:

Carport Area:
Roof:

Cost Est. for Res. Bldg: 1 Single Family PLAIN Cls CD Blt 2007
(11) Heating System: Forced Air w/ Ducts , Air Conditioning
Ground Area = 1560 SF Floor Area = 1560 SF.
Phy/Ab.Phy/Func/Econ/Comb. % Good=83/100/100/100/83
Building Areas

Stories	Exterior	Foundation	Size	Cost New	Depr. Cost	
1 Story	Siding	Crawl Space	1,560			
			Total:	186,692	154,954	
Other Additions/Adjustments						
Plumbing						
3 Fixture Bath			1	3,887	3,226	
Water/Sewer						
1000 Gal Septic			1	4,582	3,803	
Water Well, 100 Feet			1	5,680	4,714	
Porches						
WPP			25	1,296	1,076	
WCP (1 Story)			416	12,222	10,144	
Garages						
Class: D Exterior: Pole (Unfinished)						
Base Cost			960	19,334	16,047	
Door Opener			1	433	359	
Local Cost Items						
SHED			240	1,872	1,104	*5
			Totals:	235,998	195,427	

Notes:

ECF (RESIDENTIAL) 1.297 => TCV: 253,469

*** Information herein deemed reliable but not guaranteed***

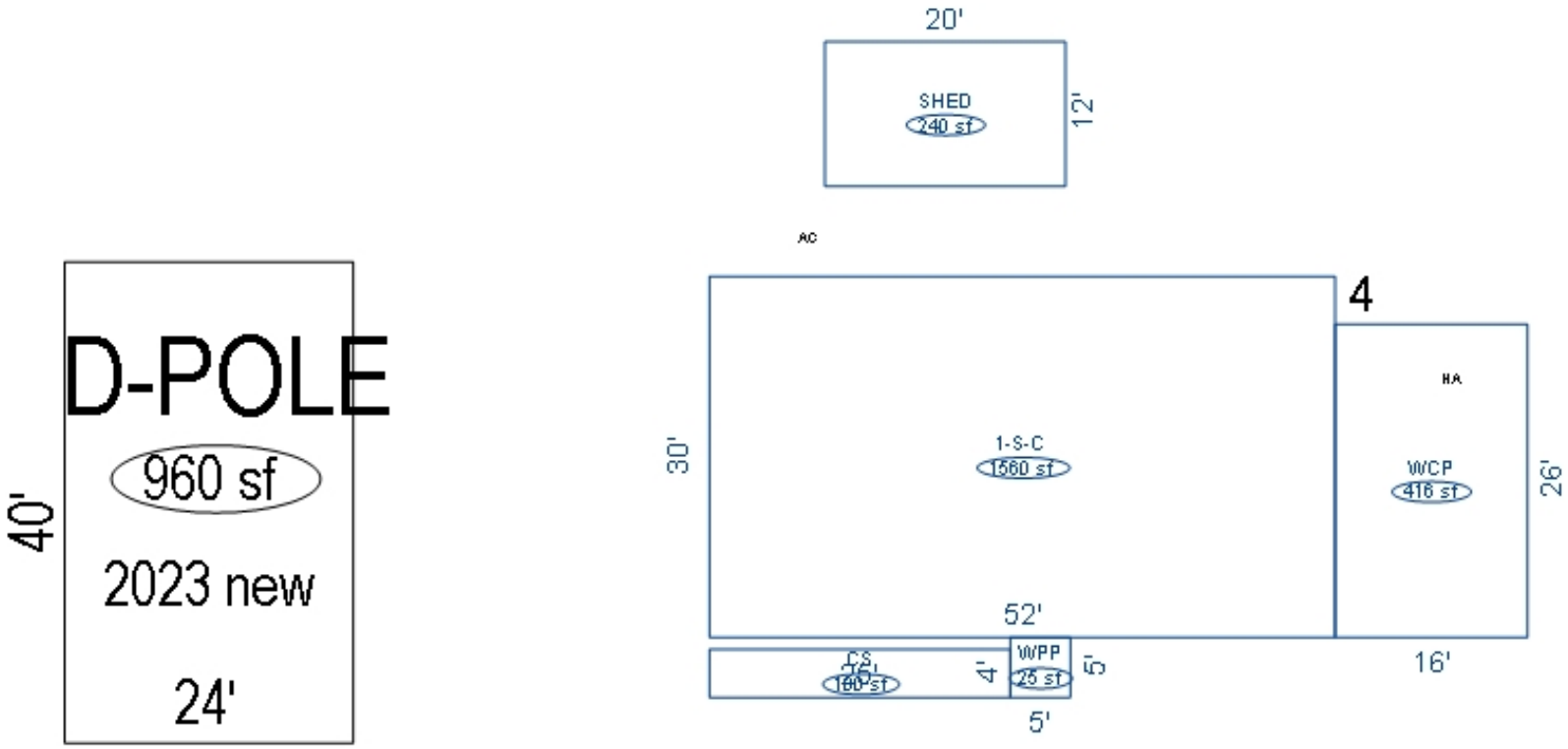

*** Information herein deemed reliable but not guaranteed***

Parcel Number: 2410-36-1301 Jurisdiction: GREENWOOD TWP County: WEXFORD Printed on 02/15/2024

Grantor	Grantee	Sale Price	Sale Date	Inst. Type	Terms of Sale	Liber & Page	Verified By	Prcnt. Trans.
ADAMS, JOHN Q & BETTY L	BAKER, VICTOR & MELODY	21,677	08/24/2015	QC	21-NOT USED/OTHER	675/2721	DEED	100.0
ADAMS, ALFRED J ETAL	ADAMS, ALFRED J LE ETAL	0	03/21/2012	QC	18-LIFE ESTATE	647/71	DEED	0.0

Property Address

5555 E 12 1/2 RD

Owner's Name/Address

BAKER, VICTOR & MELODY
5555 E 12 1/2 RD
MANTON MI 49663

Tax Description

PAR COM 2204.93 FT W OF E 1/4 COR OF SEC: W 208.71 FT; N 315 FT; E 208.71 FT; S 315 FT TO POB. --1.51 A. -- GW. SEC. 36 T24N R10W -MANTON-

Comments/Influences

The Equalizer. Copyright (c) 1999 - 2009. Licensed To: Township of Greenwood, County of Wexford, Michigan

Class: RESIDENTIAL-IMPROV Zoning:

School: MANTON CONSOLIDATED SCHOOLS

P.R.E. 100% / /

:

2024 Est TCV 88,701 TCV/TFA: 97.47

Building Permit(s)	Date	Number	Status

X Improved | Vacant

	Public Improvements
	Dirt Road
X	Gravel Road
	Paved Road
	Storm Sewer
	Sidewalk
	Water
	Sewer
X	Electric
	Gas
	Curb
	Street Lights
	Standard Utilities
	Underground Utils.

	Topography of Site
	Level
X	Rolling
X	Low
	High
	Landscaped
	Swamp
X	Wooded
	Pond
	Waterfront
	Ravine
	Wetland
	Flood Plain
X	OPEN

Who	When	What
GLA	05/11/2020	INSPECTION
GLA	07/10/2019	INSPECTION
GLA	07/10/2019	INSPECTION

Land Value Estimates for Land Table 4010.LAND VALUES

Description	Frontage	Depth	* Factors * Front	Depth	Rate	%Adj.	Reason	Value
ACREAGE			1.352 Acres		10,953	100		14,809
ROW			0.158 Acres		0	100		0
			1.51 Total Acres		Total Est. Land Value =			14,809

Land Improvement Cost Estimates

Description	Rate	Size	% Good	Cash Value
D/W/P: Asphalt Paving	3.12	3774	42	4,945
D/W/P: 3.5 Concrete	6.63	312	56	1,159
Total Estimated Land Improvements True Cash Value =				6,104

Year	Land Value	Building Value	Assessed Value	Board of Review	Tribunal/ Other	Taxable Value
2024	7,400	37,000	44,400			20,478C
2023	4,100	30,300	34,400			19,503C
2022	3,400	25,700	29,100			18,575C
2021	4,100	22,400	26,500			17,982C

*** Information herein deemed reliable but not guaranteed***

Building Type

	Single Family
X	Mobile Home
	Town Home
	Duplex
	A-Frame

X	Wood Frame

Building Style: SWT/DWT

Yr Built	Remodeled
0	0

Condition: Good

Room List

	Basement
	1st Floor
	2nd Floor
	Bedrooms

(1) Exterior

	Wood/Shingle
X	Aluminum/Vinyl
	Brick
X	Insulation

(2) Windows

X	Many Avg. Few	X	Large Avg. Small

	Wood Sash
	Metal Sash
X	Vinyl Sash
	Double Hung
	Horiz. Slide
	Casement
	Double Glass
	Patio Doors
X	Storms & Screens

(3) Roof

X	Gable Hip Flat		Gambrel Mansard Shed

X	Asphalt Shingle

Chimney:

(3) Roof (cont.)

	Eavestrough
X	Insulation
0	Front Overhang
0	Other Overhang

(4) Interior

X	Drywall Paneled		Plaster Wood T&G

Trim & Decoration

	Ex	X	Ord		Min

Size of Closets

	Lg	X	Ord		Small

Doors:		Solid	X	H.C.	

(5) Floors

Kitchen:
Other: Linoleum
Other: Carpeted

(6) Ceilings

X	Drywall

(7) Excavation

Basement: 0 S.F.
Crawl: 0 S.F.
Slab: 0 S.F.
Height to Joists: 0.0

(8) Basement

	Conc. Block
	Poured Conc.
	Stone
	Treated Wood
	Concrete Floor

(9) Basement Finish

	Recreation SF
	Living SF
	Walkout Doors (B)
	No Floor SF
	Walkout Doors (A)

(10) Floor Support

Joists:
Unsupported Len:
Cntr.Sup:

(11) Heating/Cooling

X	Gas Wood		Oil Coal		Elec. Steam	

X	Forced Warm Air
	Wall Furnace
	Warm & Cool Air
	Heat Pump

	Central Air
	Wood Furnace

(12) Electric

150	Amps Service

No./Qual. of Fixtures

	Ex.	X	Ord.		Min

No. of Elec. Outlets

	Many	X	Ave.		Few

(13) Plumbing

	Average Fixture(s)
1	3 Fixture Bath
	2 Fixture Bath
	Softener, Auto
	Softener, Manual
	Solar Water Heat
	No Plumbing
	Extra Toilet
	Extra Sink
	Separate Shower
	Ceramic Tile Floor
	Ceramic Tile Wains
	Ceramic Tub Alcove
	Vent Fan

(14) Water/Sewer

	Public Water
	Public Sewer
1	Water Well
1	1000 Gal Septic
	2000 Gal Septic

Lump Sum Items:

(15) Built-ins

	Appliance Allow.
	Cook Top
	Dishwasher
	Garbage Disposal
	Bath Heater
	Vent Fan
	Hot Tub
	Unvented Hood
	Vented Hood
	Intercom
	Jacuzzi Tub
	Jacuzzi repl.Tub
	Oven
	Microwave
	Standard Range
	Self Clean Range
	Sauna
	Trash Compactor
	Central Vacuum
	Security System

(15) Fireplaces

	Interior 1 Story
	Interior 2 Story
	2nd/Same Stack
	Two Sided
	Exterior 1 Story
	Exterior 2 Story
	Prefab 1 Story
	Prefab 2 Story
	Heat Circulator
	Raised Hearth
	Wood Stove
	Direct-Vented Gas

Class: Average
Effec. Age: 30
Floor Area:
Total Base New : 149,329 E.C.F.
Total Depr Cost: 52,265 X 1.297
Estimated T.C.V: 67,788

(16) Porches/Decks

Area	Type
120	WGEP (1 Story)
307	WGEP (1 Story)
128	WPP
120	WPP
485	WCP (1 Story)

(17) Garage

Year Built:
Car Capacity:
Class: CD
Exterior: Pole
Brick Ven.: 0
Stone Ven.: 0
Common Wall: Detache
Foundation: 18 Inch
Finished ?:
Auto. Doors: 0
Mech. Doors: 0
Area: 960
% Good: 0
Storage Area: 0
No Conc. Floor: 0

Bsmnt Garage:

Carport Area:
Roof:

Cost Est. for Res. Bldg: 1 Mobile Home SWT/DWT Cls Average Blt 0
(11) Heating System: Wall Furnace
Ground Area = 910 SF Floor Area = 910 SF.
Phy/Ab.Phy/Func/Econ/Comb. % Good=35/100/100/100/35
Building Areas

Type	Ext. Walls	Roof/Fnd.	Size	Cost New	Depr. Cost
Main Home	Ribbed	Metal	910		
			Total:	53,517	18,731
Other Additions/Adjustments					
Skirting, Metal or Vinyl, Vertical			158	1,808	633
Water/Sewer					
1000 Gal Septic			1	4,899	1,715
Water Well, 100 Feet			1	5,849	2,047
Porches					
WGEP (1 Story)			120	8,344	2,920
WGEP (1 Story)			307	16,756	5,865
WPP			128	3,508	1,228
WPP			120	3,347	1,171
WCP (1 Story)			485	17,072	5,975
Garages					
Class: CD Exterior: Pole (Unfinished)					
Base Cost			960	21,907	7,667
Local Cost Items					
FREE STANDING ROOF			1702	12,322	4,313
			Totals:	149,329	52,265

Notes:

ECF (RESIDENTIAL) 1.297 => TCV: 67,788

*** Information herein deemed reliable but not guaranteed***

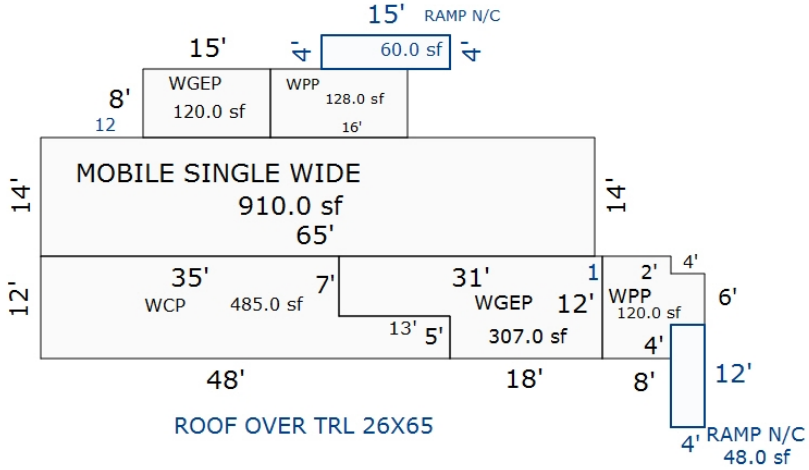

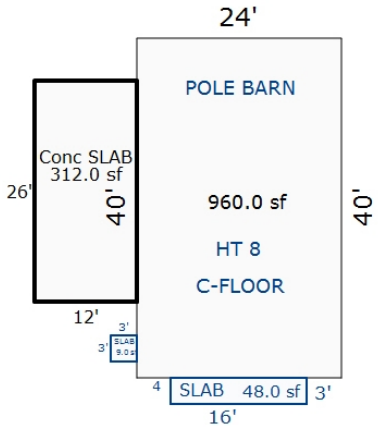

3774.22 sf of asp dwy

Sketch by Apex Sketch

*** Information herein deemed reliable but not guaranteed***

Parcel Number: 2410-36-1402 Jurisdiction: GREENWOOD TWP County: WEXFORD Printed on 02/15/2024

Grantor	Grantee	Sale Price	Sale Date	Inst. Type	Terms of Sale	Liber & Page	Verified By	Prcnt. Trans.
WALTON, RACHEL SEBASTA	WALTON, JAMES R & RACHEL I	0	05/18/2021	QC	21-NOT USED/OTHER	690/420	AGENT	0.0
OLIGER, TRISHA L	WALTON, RACHEL SEBASTA	122,000	06/02/2017	WD	03-ARM'S LENGTH	6801/188	DEED	100.0
OLIGER, BRADLEY F	OLIGER, TRISHA L	0	12/06/2010	WD	06-COURT JUDGEMENT	635/2064	DEED	0.0
WELLS FARGO BANK	DEPT OF VETERANS AFFAIRS	0	01/08/2010	WD	17-LENDING TO LENDING	627/1666	DEED	0.0

Property Address

5771 E 12 1/2 RD

Owner's Name/Address

WALTON, JAMES R & RACHEL L
5771 E 12 1/2 RD
MANTON MI 49663

Tax Description

W 1/2 OF SE 1/4 OF NE 1/4 20 A. GW. SEC. 36 T24N R10W -MANTON-

Comments/Influences

The Equalizer. Copyright (c) 1999 - 2009.
Licensed To: Township of Greenwood, County of Wexford, Michigan

Class: RESIDENTIAL-IMPROV Zoning:

School: MANTON CONSOLIDATED SCHOOLS

P.R.E. 100% 06/02/2017

:

2024 Est TCV 237,502 TCV/TFA: 178.84

Building Permit(s)	Date	Number	Status

X Improved | Vacant

	Public Improvements
	Dirt Road
X	Gravel Road
	Paved Road
	Storm Sewer
	Sidewalk
	Water
	Sewer
X	Electric
	Gas
	Curb
	Street Lights
	Standard Utilities
	Underground Utils.

	Topography of Site
	Level
X	Rolling
X	Low
	High
	Landscaped
	Swamp
	Wooded
	Pond
	Waterfront
	Ravine
	Wetland
	Flood Plain
X	OPEN

Who	When	What
GLA	05/11/2020	INSPECTION
GLA	07/10/2019	INSPECTION
GLA	07/10/2019	INSPECTION

Land Value Estimates for Land Table 4010.LAND VALUES

Description	Frontage	Depth	* Factors * Front	Depth	Rate	%Adj.	Reason	Value
ACREAGE			19.510 Acres		3,200	100		62,432
ROW			0.490 Acres		0	100		0
			20.00 Total Acres		Total Est. Land Value =			62,432

Land Improvement Cost Estimates

Description	Rate	Size	% Good	Cash Value
D/W/P: 3.5 Concrete	6.21	1729	51	5,476
Fencing: Wire Mesh, #9	3.76	528	83	1,648
Pool: Concrete	90.57	512	16	7,605
Total Estimated Land Improvements True Cash Value =				14,729

Year	Land Value	Building Value	Assessed Value	Board of Review	Tribunal/ Other	Taxable Value
2024	31,200	87,600	118,800			75,550C
2023	25,400	72,800	98,200			71,953C
2022	21,500	62,400	83,900			68,527C
2021	19,800	63,000	82,800			66,338C

*** Information herein deemed reliable but not guaranteed***

Building Type

X	Single Family
	Mobile Home
	Town Home
	Duplex
	A-Frame
X	Wood Frame

Building Style: TWO STORY

Yr Built	Remodeled
0	0

Condition: Good

Room List

	Basement
	1st Floor
	2nd Floor
	Bedrooms

(1) Exterior

X	Wood/Shingle
	Aluminum/Vinyl
	Brick
	Insulation

(2) Windows

X	Many	X	Large
	Avg.		Avg.
	Few		Small

	Wood Sash
	Metal Sash
	Vinyl Sash
	Double Hung
	Horiz. Slide
	Casement
	Double Glass
	Patio Doors
	Storms & Screens

(3) Roof

X	Gable		Gambrel
	Hip		Mansard
	Flat		Shed

X	Asphalt Shingle

Chimney: Brick

(3) Roof (cont.)

	Eavestrough
	Insulation
0	Front Overhang
0	Other Overhang

(4) Interior

	Drywall		Plaster
	Paneled		Wood T&G

Trim & Decoration

	Ex	X	Ord		Min

Size of Closets

	Lg	X	Ord		Small

Doors:		Solid	X	H.C.	

(5) Floors

Kitchen:
Other:
Other:

(6) Ceilings

(7) Excavation

Basement: 1196 S.F.
Crawl: 132 S.F.
Slab: 0 S.F.
Height to Joists: 0.0

(8) Basement

	Conc. Block
	Poured Conc.
	Stone
	Treated Wood
	Concrete Floor

(9) Basement Finish

	Recreation SF
	Living SF
	Walkout Doors (B)
	No Floor SF
	Walkout Doors (A)

(10) Floor Support

Joists:
Unsupported Len:
Cntr.Sup:

(11) Heating/Cooling

X	Gas		Oil		Elec.
	Wood		Coal		Steam

	Forced Air w/o Ducts
X	Forced Air w/ Ducts
	Forced Hot Water
	Electric Baseboard
	Elec. Ceil. Radiant
	Radiant (in-floor)
	Electric Wall Heat
	Space Heater
	Wall/Floor Furnace
	Forced Heat & Cool
	Heat Pump
	No Heating/Cooling

	Central Air
	Wood Furnace

(12) Electric

0	Amps Service

No./Qual. of Fixtures

	Ex.	X	Ord.		Min

No. of Elec. Outlets

	Many	X	Ave.		Few

(13) Plumbing

1	Average Fixture(s)
	3 Fixture Bath
	2 Fixture Bath
	Softener, Auto
	Softener, Manual
	Solar Water Heat
	No Plumbing
	Extra Toilet
	Extra Sink
	Separate Shower
	Ceramic Tile Floor
	Ceramic Tile Wains
	Ceramic Tub Alcove
	Vent Fan

(14) Water/Sewer

	Public Water
	Public Sewer
1	Water Well
1	1000 Gal Septic
	2000 Gal Septic

Lump Sum Items:

(15) Built-ins

	Appliance Allow.
	Cook Top
	Dishwasher
	Garbage Disposal
	Bath Heater
	Vent Fan
	Hot Tub
	Unvented Hood
	Vented Hood
	Intercom
	Jacuzzi Tub
	Jacuzzi repl.Tub
	Oven
	Microwave
	Standard Range
	Self Clean Range
	Sauna
	Trash Compactor
	Central Vacuum
	Security System

(15) Fireplaces

	Interior 1 Story
	Interior 2 Story
	2nd/Same Stack
	Two Sided
	Exterior 1 Story
	Exterior 2 Story
	Prefab 1 Story
	Prefab 2 Story
	Heat Circulator
	Raised Hearth
	Wood Stove
	Direct-Vented Gas

Class: C
Effec. Age: 49
Floor Area: 1,328
Total Base New : 250,096 E.C.F.
Total Depr Cost: 123,625 X 1.297
Estimated T.C.V: 160,341

(16) Porches/Decks

Area	Type
36	CCP (1 Story)
48	Brzwy, FW

(17) Garage

Year Built:
Car Capacity:
Class: C
Exterior: Siding
Brick Ven.: 0
Stone Ven.: 0
Common Wall: 1 Wall
Foundation: 42 Inch
Finished ?:
Auto. Doors: 0
Mech. Doors: 0
Area: 564
% Good: 0
Storage Area: 0
No Conc. Floor: 0

Bsmnt Garage:

Carport Area:
Roof:

Cost Est. for Res. Bldg: 1 Single Family TWO STORY Cls C Blt 0
(11) Heating System: Forced Air w/ Ducts
Ground Area = 1328 SF Floor Area = 1328 SF.
Phy/Ab.Phy/Func/Econ/Comb. % Good=51/100/100/100/51
Building Areas

Stories	Exterior	Foundation	Size	Cost New	Depr. Cost	
1 Story	Siding	Basement	1,196			
1 Story	Siding	Crawl Space	132			
			Total:	194,047	98,964	
Other Additions/Adjustments						
Water/Sewer						
1000 Gal Septic			1	4,899	2,498	
Water Well, 100 Feet			1	5,849	2,983	
Porches						
CCP (1 Story)			36	1,165	594	
Garages						
Class: C Exterior: Siding Foundation: 42 Inch (Unfinished)						
Base Cost			564	24,641	12,567	
Common Wall: 1 Wall			1	-2,705	-1,380	
Class: D Exterior: Pole (Unfinished)						
Base Cost			1440	27,691	8,584	*3
No Concrete Floor			1440	-8,078	-2,504	
Breezeways						
Frame Wall			48	2,587	1,319	
			Totals:	250,096	123,625	

Notes:

ECF (RESIDENTIAL) 1.297 => TCV: 160,341

*** Information herein deemed reliable but not guaranteed***

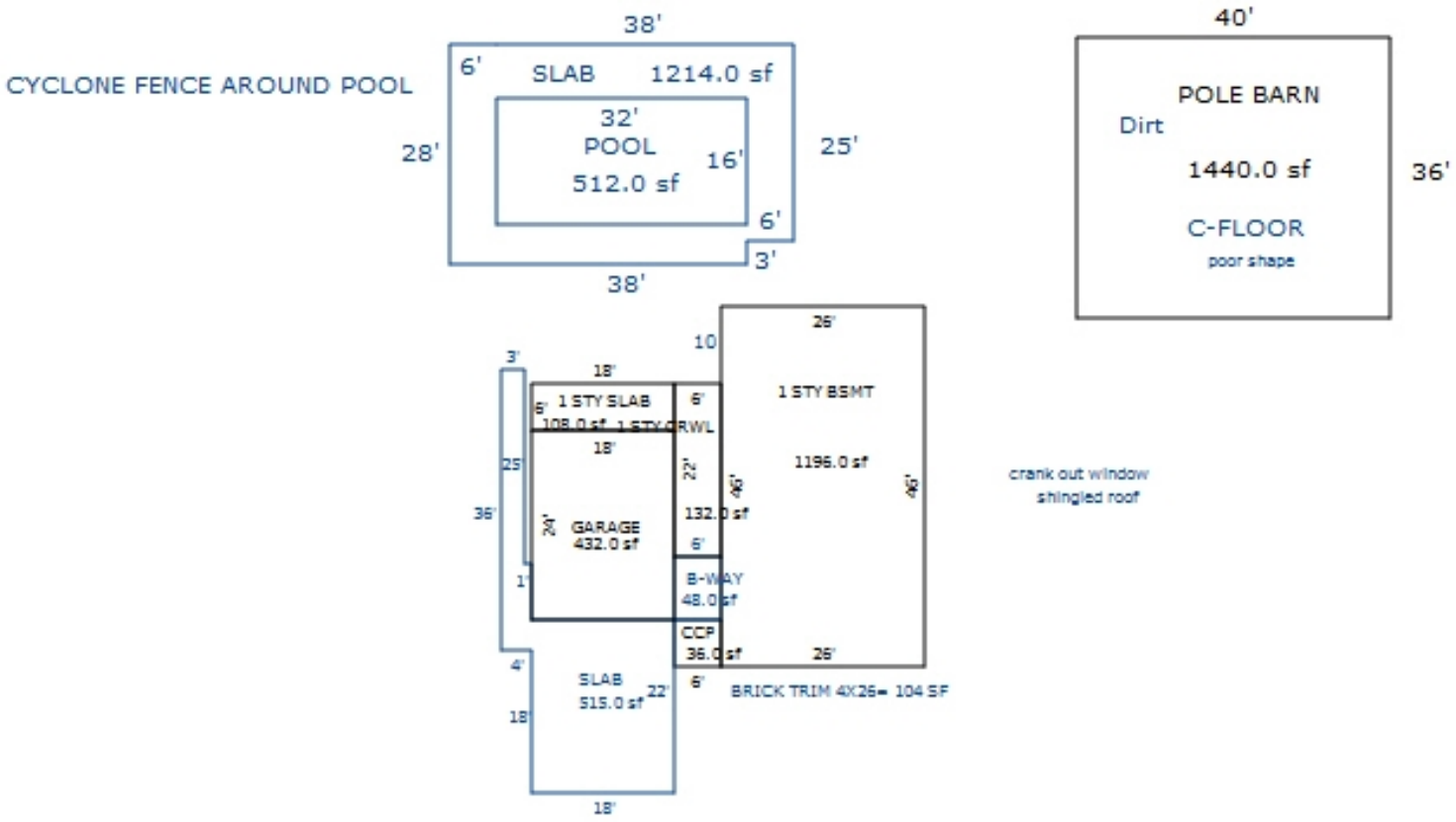

Sketch by Apex Sketch

*** Information herein deemed reliable but not guaranteed***

Parcel Number: 2410-36-1403 Jurisdiction: GREENWOOD TWP County: WEXFORD Printed on 02/15/2024

Grantor	Grantee	Sale Price	Sale Date	Inst. Type	Terms of Sale	Liber & Page	Verified By	Prcnt. Trans.
FARRELL, JOSHUA P	THOMPSON, EMILY R & KRISTI	130,700	11/30/2022	WD	03-ARM'S LENGTH	694/1038	DEED	100.0
HANKINS, JACK SR.	THOMPSON, KRISTINA M.	35,000	04/30/1997	WD	03-ARM'S LENGTH	354:508	DEED	0.0
LABARRE, RICHARD E.	HANKINS SR., JACK & PAT	25,000	07/14/1995	WD	03-ARM'S LENGTH	344:998	DEED	0.0

Property Address

5913 E 12 1/2 RD

Owner's Name/Address

THOMPSON, EMILY R & KRISTINA M
& KRISTINA M
5913 E 12 1/2 RD
MANTON MI 49663

Tax Description

SE 1/4 OF SE 1/4 OF NE 1/4 9.55 A M/L GW. SEC. 36 T24N R10W -MANTON- [[ASSESSED W/ 36-1401, 1404 & 1405 '06

Comments/Influences

Default Comments

The Equalizer. Copyright (c) 1999 - 2009.
Licensed To: Township of Greenwood, County of Wexford, Michigan

Class: RESIDENTIAL-IMPROV Zoning:

School: MANTON CONSOLIDATED SCHOOLS

P.R.E. 100% 12/12/2022 Qual. Ag.

:

2024 Est TCV 137,171 TCV/TFA: 71.44

Building Permit(s)	Date	Number	Status
RESIDENTIAL - REMODEL	05/07/2003	PM6694	
RESIDENTIAL - NEW	02/04/2000	PM3957	
RESIDENTIAL - REMODEL	11/02/1999	PP1564	
RESIDENTIAL - REMODEL	05/27/1999	PE12096	

X Improved | Vacant

Public Improvements

- Dirt Road
- X Gravel Road
- Paved Road
- Storm Sewer
- Sidewalk
- Water
- Sewer
- X Electric
- Gas
- Curb
- Street Lights
- Standard Utilities
- Underground Utils.

Topography of Site

- Level
- X Rolling
- X Low
- High
- Landscaped
- X Swamp
- Wooded
- Pond
- Waterfront
- Ravine
- Wetland
- Flood Plain
- X OPEN/OPEN

Who	When	What
GLA	05/13/2021	INSPECTION
GLA	07/10/2019	INSPECTION
GLA	07/10/2019	INSPECTION

Land Value Estimates for Land Table 1010.AG

Description	Frontage	Depth	* Factors * Front	Depth	Rate	%Adj.	Reason	Value
AG LAND	60 ACRES		8.52 Acres		2690	100		22,919
AG LAND	ROW		1.03 Acres		0	100		0
			9.55 Total Acres		Total Est. Land Value =			22,919

Land Improvement Cost Estimates

Description	Rate	Size	% Good	Cash Value
Fencing: Wd, Solid, 5 ft.	26.37	252	41	2,724
Total Estimated Land Improvements True Cash Value =				2,724

Year	Land Value	Building Value	Assessed Value	Board of Review	Tribunal/ Other	Taxable Value
2024	11,500	57,100	68,600			63,210C
2023	8,500	51,700	60,200			60,200S
2022	7,700	42,900	50,600			44,592C
2021	7,200	49,600	56,800			43,168C

*** Information herein deemed reliable but not guaranteed***

Building Type

X	Single Family
	Mobile Home
	Town Home
	Duplex
	A-Frame
X	Wood Frame

Building Style: PLAIN

Yr Built	Remodeled
1979	0

Condition: Poor

Room List

	Basement
	1st Floor
	2nd Floor
	Bedrooms

(1) Exterior

	Wood/Shingle
	Aluminum/Vinyl
	Brick
X	Vinyl
	Insulation

(2) Windows

X	Many Avg. Few	X	Large Avg. Small

X	Wood Sash
X	Metal Sash
	Vinyl Sash
	Double Hung
X	Horiz. Slide
	Casement
	Double Glass
	Patio Doors
X	Storms & Screens

(3) Roof

X	Gable		Gambrel
	Hip		Mansard
	Flat		Shed

X	Asphalt Shingle

Chimney: Metal

(3) Roof (cont.)

	Eavestrough
	Insulation
18	Front Overhang
18	Other Overhang

(4) Interior

	Drywall		Plaster
X	Paneled		Wood T&G

Trim & Decoration

	Ex	X	Ord		Min

Size of Closets

	Lg	X	Ord		Small

Doors:		Solid	X	H.C.	

(5) Floors

Kitchen: Linoleum
Other: Carpeted
Other:

(6) Ceilings

(7) Excavation

Basement: 0 S.F.
Crawl: 1488 S.F.
Slab: 0 S.F.
Height to Joists: 0.0

(8) Basement

	Conc. Block
	Poured Conc.
	Stone
	Treated Wood
	Concrete Floor

(9) Basement Finish

	Recreation	SF
	Living	SF
	Walkout Doors (B)	
	No Floor	SF
	Walkout Doors (A)	

(10) Floor Support

Joists:
Unsupported Len:
Cntr.Sup:

(11) Heating/Cooling

X	Gas		Oil		Elec.
	Wood		Coal		Steam

	Forced Air w/o Ducts
X	Forced Air w/ Ducts
	Forced Hot Water
	Electric Baseboard
	Elec. Ceil. Radiant
	Radiant (in-floor)
	Electric Wall Heat
	Space Heater
	Wall/Floor Furnace
	Forced Heat & Cool
	Heat Pump
	No Heating/Cooling

	Central Air
	Wood Furnace

(12) Electric

0	Amps Service

No./Qual. of Fixtures

	Ex.	X	Ord.		Min

No. of Elec. Outlets

	Many	X	Ave.		Few

(13) Plumbing

1	Average Fixture(s)
	3 Fixture Bath
	2 Fixture Bath
	Softener, Auto
	Softener, Manual
	Solar Water Heat
	No Plumbing
	Extra Toilet
	Extra Sink
	Separate Shower
	Ceramic Tile Floor
	Ceramic Tile Wains
	Ceramic Tub Alcove
	Vent Fan

(14) Water/Sewer

	Public Water
	Public Sewer
1	Water Well
1	1000 Gal Septic
	2000 Gal Septic

Lump Sum Items:

(15) Built-ins

	Appliance Allow.
	Cook Top
	Dishwasher
	Garbage Disposal
	Bath Heater
	Vent Fan
	Hot Tub
	Unvented Hood
	Vented Hood
	Intercom
	Jacuzzi Tub
	Jacuzzi repl.Tub
	Oven
	Microwave
	Standard Range
	Self Clean Range
	Sauna
	Trash Compactor
	Central Vacuum
	Security System

(15) Fireplaces

	Interior 1 Story
	Interior 2 Story
	2nd/Same Stack
	Two Sided
	Exterior 1 Story
	Exterior 2 Story
	Prefab 1 Story
	Prefab 2 Story
	Heat Circulator
	Raised Hearth
	Wood Stove
	Direct-Vented Gas

Class: CD
Effec. Age: 61
Floor Area: 1,920
Total Base New : 261,834 E.C.F.
Total Depr Cost: 117,894 X 0.946
Estimated T.C.V: 111,528

(16) Porches/Decks

Area	Type
308	WPP
15	4in Concrete
32	CPP
144	WCP (1 Story)
256	Treated Wood
48	Treated Wood
96	Brzwy, FW

(17) Garage

Year Built:
Car Capacity:
Class: CD
Exterior: Siding
Brick Ven.: 0
Stone Ven.: 0
Common Wall: Detache
Foundation: 42 Inch
Finished ?:
Auto. Doors: 0
Mech. Doors: 0
Area: 384
% Good: 0
Storage Area: 0
No Conc. Floor: 0

Bsmnt Garage:

Carport Area:
Roof:

Cost Est. for Res. Bldg: 1 Single Family PLAIN Cls CD Blt 1979
(11) Heating System: Forced Air w/ Ducts
Ground Area = 1488 SF Floor Area = 1920 SF.
Phy/Ab.Phy/Func/Econ/Comb. % Good=45/100/100/100/45
Building Areas

Stories	Exterior	Foundation	Size	Cost New	Depr. Cost
1 Story	Siding	Crawl Space	1,056		
2 Story	Siding	Crawl Space	432		
			Total:	203,269	91,471

Other Additions/Adjustments

Water/Sewer				
1000 Gal Septic	1	4,582	2,062	
Water Well, 100 Feet	1	5,680	2,556	
Porches				
WPP	308	4,614	2,076	
CPP	32	833	375	
WCP (1 Story)	144	5,777	2,600	
4in Concrete	15	111	50	
Deck				
Treated Wood	256	4,792	2,156	
Treated Wood w/Roof (Deck Portion)	48	1,702	766	
Treated Wood w/Roof (Roof portion)	48	883	397	
Garages				
Class: CD Exterior: Siding Foundation: 42 Inch (Unfinished)				
Base Cost	384	17,076	7,684	
Breezeways				
Frame Wall	96	4,590	2,065	
Local Cost Items				
SHED	800	6,240	2,870	*4
SHED #2	96	749	345	*4

<<<<< Calculations too long. See Valuation printout for complete pricing. >>>>>

*** Information herein deemed reliable but not guaranteed***

this building is in poor shape

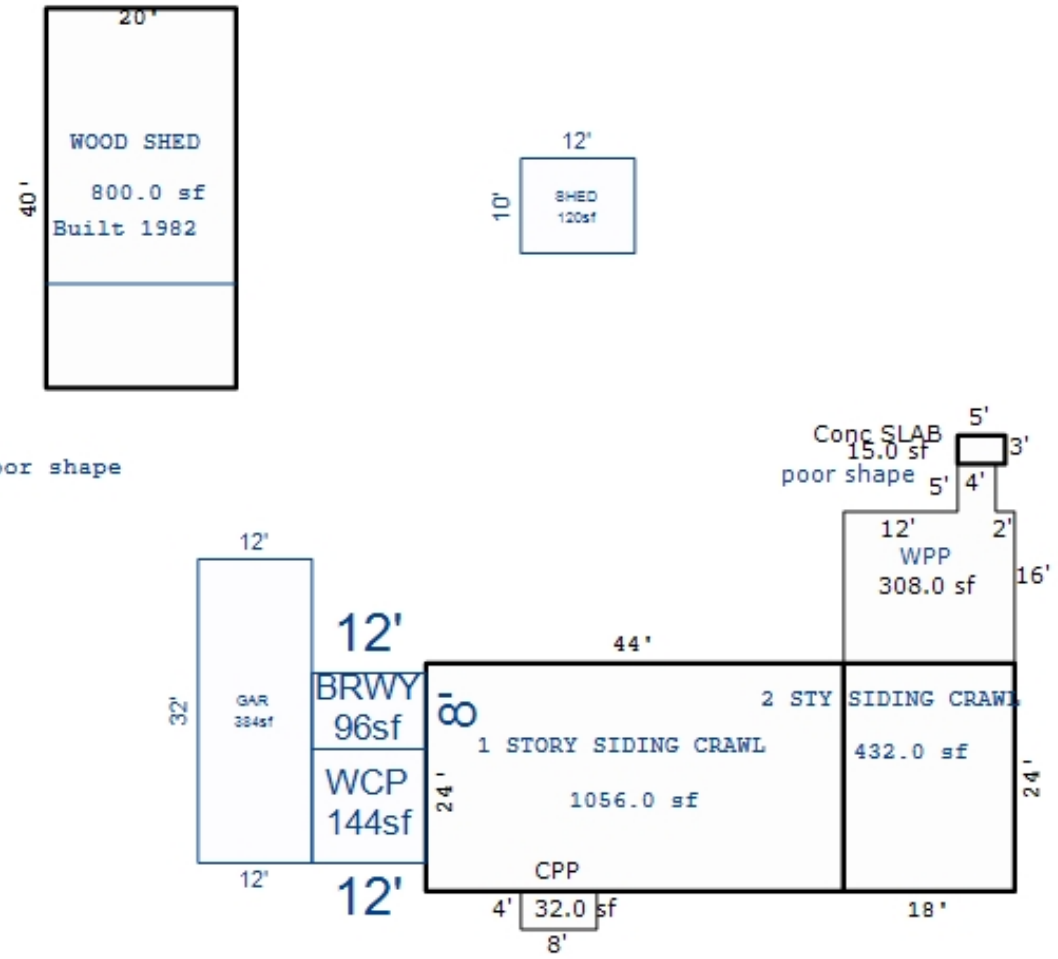

*** Information herein deemed reliable but not guaranteed***

Parcel Number: 2410-36-2101 Jurisdiction: GREENWOOD TWP County: WEXFORD Printed on 02/15/2024

Grantor	Grantee	Sale Price	Sale Date	Inst. Type	Terms of Sale	Liber & Page	Verified By	Prcnt. Trans.
THOMAS, TERRY & ROBERTA	OSBORNE, CATHERINE & CLIFF	125,000	09/10/2004	WD	03-ARM'S LENGTH	561:2286	DEED	0.0
		125,000	09/01/2004	WD	03-ARM'S LENGTH	561/2286	DEED	0.0
GLENN, JOHN R	THOMAS, TERRY & ROBERTA	8,900	10/23/2002	WD	08-ESTATE	448:456	DEED	0.0

Property Address

5540 E 12 RD

Owner's Name/Address

OSBORNE,CATHERINE
& CLIFFORD
5440 E 12 RD
MANTON MI 49663

Tax Description

E 1/4 OF NE 1/4 OF NW 1/4 10 A. GW. SEC. 36 T24N R10W -MANTON-

Comments/Influences

Class: RESIDENTIAL-IMPROV Zoning:

School: MANTON CONSOLIDATED SCHOOLS

P.R.E. 0%

:

2024 Est TCV 133,230 TCV/TFA: 102.80

Building Permit(s)	Date	Number	Status
Res. Add/Alter/Repair	09/03/2019	PB19-0197	RECHECK
RESIDENTIAL - REMODEL	10/31/2003	PB11954	
RESIDENTIAL - REMODEL	10/23/2002	PB11298	

X	Improved		Vacant

	Public Improvements
	Dirt Road
X	Gravel Road
	Paved Road
	Storm Sewer
	Sidewalk
	Water
	Sewer
X	Electric
	Gas
	Curb
	Street Lights
	Standard Utilities
	Underground Utils.

	Topography of Site
	Level
X	Rolling
X	Low
	High
	Landscaped
X	Swamp
	Wooded
	Pond
	Waterfront
	Ravine
	Wetland
	Flood Plain
X	OPEN/PINES

Who	When	What
GLA	05/11/2020	INSPECTION
GLA	07/10/2019	INSPECTION
GLA	07/10/2019	INSPECTION

Land Value Estimates for Land Table 4010.LAND VALUES

Description	Frontage	Depth	* Factors * Front	Depth	Rate	%Adj.	Reason	Value
ACREAGE			9.750 Acres		4,664	100		45,470
ROW			0.250 Acres		0	100		0
			10.00 Total Acres		Total Est. Land Value =			45,470

Land Improvement Cost Estimates

Description	Rate	Size	% Good	Cash Value
D/W/P: 3.5 Concrete	6.63	452	50	1,498
Fencing: Wire Mesh, #9	3.82	6390	40	9,764
Total Estimated Land Improvements True Cash Value =				11,262

Year	Land Value	Building Value	Assessed Value	Board of Review	Tribunal/ Other	Taxable Value
2024	22,700	43,900	66,600			34,241C
2023	12,900	37,600	50,500			32,611C
2022	11,900	33,700	45,600			31,059C
2021	12,000	31,000	43,000			30,067C

The Equalizer. Copyright (c) 1999 - 2009.
Licensed To: Township of Greenwood, County of Wexford, Michigan

*** Information herein deemed reliable but not guaranteed***

Building Type

	Single Family
X	Mobile Home
	Town Home
	Duplex
	A-Frame

X	Wood Frame

Building Style: RANCH

Yr Built	Remodeled
0	0

Condition: Good

Room List

	Basement
	1st Floor
	2nd Floor
	Bedrooms

(1) Exterior

X	Wood/Shingle
	Aluminum/Vinyl
	Brick
	Insulation

(2) Windows

X	Many Avg. Few	X	Large Avg. Small

	Wood Sash
	Metal Sash
	Vinyl Sash
	Double Hung
	Horiz. Slide
	Casement
	Double Glass
	Patio Doors
	Storms & Screens

(3) Roof

X	Gable		Gambrel
	Hip		Mansard
	Flat		Shed

X	Asphalt Shingle

Chimney: Brick

(3) Roof (cont.)

	Eavestrough
	Insulation
0	Front Overhang
0	Other Overhang

(4) Interior

	Drywall		Plaster
	Paneled		Wood T&G

Trim & Decoration

	Ex	X	Ord		Min

Size of Closets

	Lg	X	Ord		Small

Doors:		Solid	X	H.C.	

(5) Floors

Kitchen:
Other:
Other:

(6) Ceilings

(7) Excavation

Basement: 0 S.F.
Crawl: 0 S.F.
Slab: 0 S.F.
Height to Joists: 0.0

(8) Basement

	Conc. Block
	Poured Conc.
	Stone
	Treated Wood
	Concrete Floor

(9) Basement Finish

	Recreation SF
	Living SF
	Walkout Doors (B)
	No Floor SF
	Walkout Doors (A)

(10) Floor Support

Joists:
Unsupported Len:
Cntr.Sup:

(11) Heating/Cooling

X	Gas		Oil		Elec.
	Wood		Coal		Steam

X	Forced Warm Air
	Wall Furnace
	Warm & Cool Air
	Heat Pump

	Central Air
	Wood Furnace

(12) Electric

0	Amps Service

No./Qual. of Fixtures

	Ex.	X	Ord.		Min

No. of Elec. Outlets

	Many	X	Ave.		Few

(13) Plumbing

	Average Fixture(s)
2	3 Fixture Bath
	2 Fixture Bath
	Softener, Auto
	Softener, Manual
	Solar Water Heat
	No Plumbing
	Extra Toilet
	Extra Sink
	Separate Shower
	Ceramic Tile Floor
	Ceramic Tile Wains
	Ceramic Tub Alcove
	Vent Fan

(14) Water/Sewer

	Public Water
	Public Sewer
1	Water Well
1	1000 Gal Septic
	2000 Gal Septic

Lump Sum Items:

(15) Built-ins

	Appliance Allow.
	Cook Top
	Dishwasher
	Garbage Disposal
	Bath Heater
	Vent Fan
	Hot Tub
	Unvented Hood
	Vented Hood
	Intercom
	Jacuzzi Tub
	Jacuzzi repl.Tub
	Oven
	Microwave
	Standard Range
	Self Clean Range
	Sauna
	Trash Compactor
	Central Vacuum
	Security System

(15) Fireplaces

	Interior 1 Story
	Interior 2 Story
	2nd/Same Stack
	Two Sided
	Exterior 1 Story
	Exterior 2 Story
	Prefab 1 Story
	Prefab 2 Story
	Heat Circulator
	Raised Hearth
	Wood Stove
	Direct-Vented Gas

Class: Fair
Effec. Age: 20
Floor Area:
Total Base New : 128,417 E.C.F.
Total Depr Cost: 58,981 X 1.297
Estimated T.C.V: 76,498

(16) Porches/Decks

Area	Type
120	Treated Wood
16	Treated Wood

(17) Garage

Year Built:
Car Capacity:
Class: CD
Exterior: Pole
Brick Ven.: 0
Stone Ven.: 0
Common Wall: Detache
Foundation: 18 Inch
Finished ?:
Auto. Doors: 0
Mech. Doors: 0
Area: 1040
% Good: 0
Storage Area: 0
No Conc. Floor: 0

Bsmnt Garage:

Carport Area:
Roof:

Cost Est. for Res. Bldg: 1 Mobile Home RANCH Cls Fair Blt 0
(11) Heating System: Forced Warm Air
Ground Area = 1296 SF Floor Area = 1296 SF.
Phy/Ab.Phy/Func/Econ/Comb. % Good=46/100/100/100/46
Building Areas

Type	Ext. Walls	Roof/Fnd.	Size	Cost New	Depr. Cost	
Main Home	Siding	Comp.Shingle	1296			
			Total:	78,802	36,249	
Other Additions/Adjustments						
Skirting, Metal or Vinyl, Vertical			156	1,739	800	
Plumbing						
3 Fixture Bath			1	2,745	1,263	
Water/Sewer						
1000 Gal Septic			1	4,582	2,108	
Water Well, 100 Feet			1	5,680	2,613	
Deck						
Treated Wood			120	2,900	1,334	
Treated Wood			16	720	331	
Garages						
Class: CD Exterior: Pole (Unfinished)						
Base Cost			1040	22,620	10,405	
Unit-in-Place Cost Items						
WOOD BURNING STOVE			1	7,100	3,266	
Local Cost Items						
SHED			196	1,529	612	*4
			Totals:	128,417	58,981	

Notes:

ECF (RESIDENTIAL) 1.297 => TCV: 76,498

*** Information herein deemed reliable but not guaranteed***

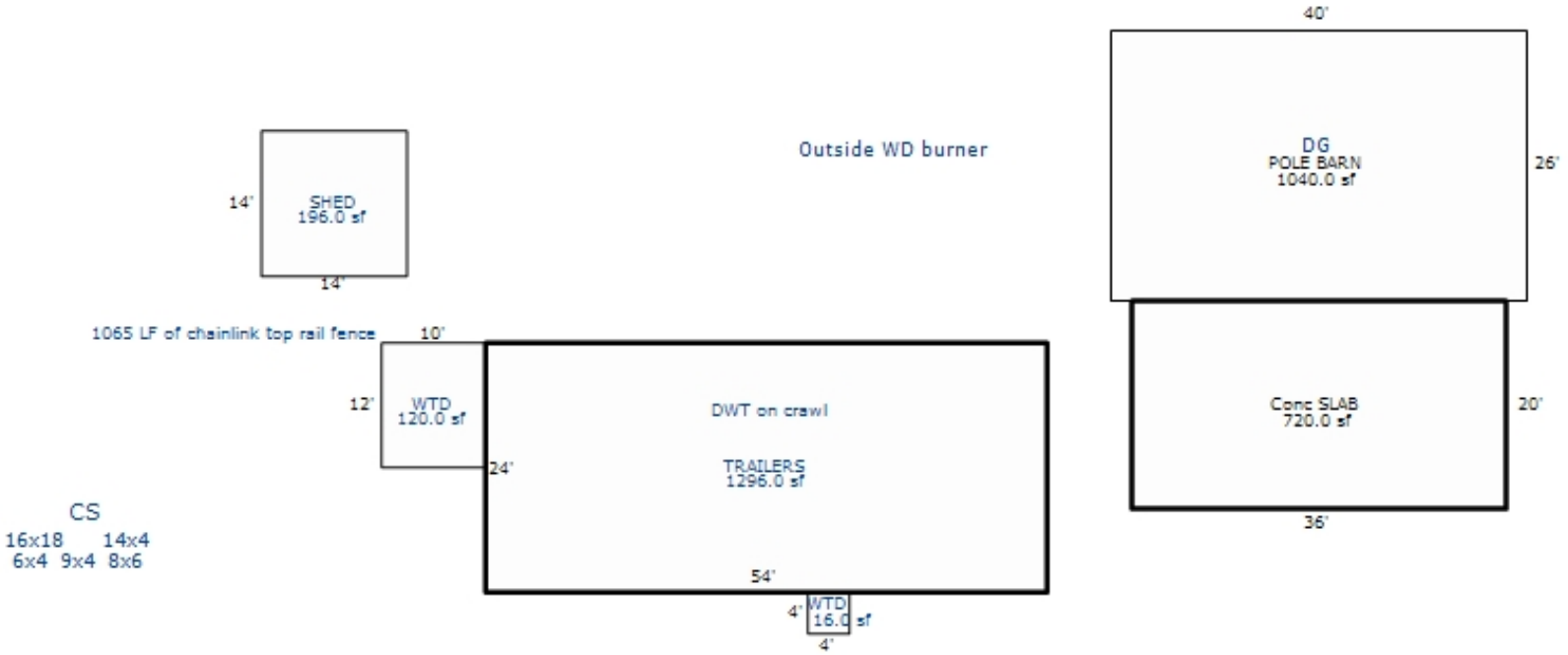

*** Information herein deemed reliable but not guaranteed***

Parcel Number: 2410-36-2102 Jurisdiction: GREENWOOD TWP County: WEXFORD Printed on 02/15/2024

Grantor	Grantee	Sale Price	Sale Date	Inst. Type	Terms of Sale	Liber & Page	Verified By	Prcnt. Trans.
GLENN, JOHN & NANCY	THOMAS, TERRY & ROBERTA	8,900	07/29/2004	WD	08-ESTATE	560:302	DEED	0.0
GLENN, JOHN R.	THOMAS, TERRY & ROBERTA	8,900	05/01/1995	LC	03-ARM'S LENGTH	347:163	DEED	0.0

Property Address

Owner's Name/Address

OSBORNE, CATHERINE
& CLIFFORD
5440 E 12 RD
MANTON MI 49663

Tax Description

W 1/2 OF E 1/2 OF NE 1/4 OF NW 1/4 10 A.
GW. SEC. 36 T24N R10W- MANTON-

Comments/Influences

Class: RESIDENTIAL-VACANT Zoning:

School: MANTON CONSOLIDATED SCHOOLS

P.R.E. 0%

:

2024 Est TCV 45,505

Building Permit(s)	Date	Number	Status

	Improved	X	Vacant

	Public Improvements
X	Dirt Road
X	Gravel Road
	Paved Road
	Storm Sewer
	Sidewalk
	Water
	Sewer
X	Electric
	Gas
	Curb
	Street Lights
	Standard Utilities
	Underground Utils.

	Topography of Site
	Level
X	Rolling
X	Low
	High
	Landscaped
X	Swamp
	Wooded
	Pond
	Waterfront
	Ravine
	Wetland
	Flood Plain
X	OPEN/PINES

Who	When	What
GLA	05/11/2020	INSPECTION
GLA	07/10/2019	INSPECTION
GLA	07/10/2019	INSPECTION

Land Value Estimates for Land Table 4010.LAND VALUES

Description	Frontage	Depth	* Factors * Front	Depth	Rate	%Adj.	Reason	Value
ACREAGE			9.760 Acres		4,662	100		45,505
ROW			0.240 Acres		0	100		0
			10.00 Total Acres		Total Est. Land Value =			45,505

Year	Land Value	Building Value	Assessed Value	Board of Review	Tribunal/ Other	Taxable Value
2024	22,800	0	22,800			11,059C
2023	12,900	0	12,900			10,533C
2022	11,900	0	11,900			10,032C
2021	12,000	0	12,000			9,712C

The Equalizer. Copyright (c) 1999 - 2009.
Licensed To: Township of Greenwood, County of Wexford, Michigan

*** Information herein deemed reliable but not guaranteed***

Parcel Number: 2410-36-2103 Jurisdiction: GREENWOOD TWP County: WEXFORD Printed on 02/15/2024

Grantor	Grantee	Sale Price	Sale Date	Inst. Type	Terms of Sale	Liber & Page	Verified By	Prcnt. Trans.
KUKUK, ROBERT & JOLENE	PEIRSON, BRADLEY	150,000	02/17/2017	WD	03-ARM'S LENGTH	6791/491	DEED	100.0
KUKUK, JOLENE M & ROBERT L	BERGEN, WALT & STACY	134,000	12/05/2014	LC	03-ARM'S LENGTH	676/192	DEED	0.0
VANDENBERG, PHILLIP	KUKUK, JOLENE M & ROBERT I	0	10/27/2014	QC	21-NOT USED/OTHER	671/2994	DEED	0.0
KUKUK, ROBERT & JOLENE	VANDENBERG, PHILLIP	145,000	08/12/2013	LC	19-MULTI PARCEL ARM'S LEN	661/1626	DEED	100.0

Property Address

5338 E 12 RD

Owner's Name/Address

PEIRSON, BRADLEY
5338 E 12 RD
MANTON MI 49663

Tax Description

W 1/2 OF NE 1/4 OF NW 1/4 EXC N 660 FT OF W 330 FT THEREOF 15 A M/L GW. SEC. 36 T24N R10W -MANTON-

Comments/Influences

Class: RESIDENTIAL-IMPROV Zoning:

School: MANTON CONSOLIDATED SCHOOLS

P.R.E. 100% 02/27/2017

:

2024 Est TCV 375,764 TCV/TFA: 176.58

Building Permit(s)	Date	Number	Status
RESIDENTIAL - NEW	09/09/2002	PM6180	
RESIDENTIAL - NEW	08/07/2002	PM6106	
RESIDENTIAL - NEW	07/11/2002	PP2668	
RESIDENTIAL - NEW	07/05/2002	PE14594	

X	Improved		Vacant

	Public Improvements
	Dirt Road
X	Gravel Road
	Paved Road
	Storm Sewer
	Sidewalk
	Water
	Sewer
X	Electric
	Gas
	Curb
	Street Lights
	Standard Utilities
	Underground Utils.

	Topography of Site
	Level
X	Rolling
	Low
X	High
	Landscaped
	Swamp
	Wooded
	Pond
	Waterfront
	Ravine
	Wetland
	Flood Plain
X	OPEN/PINES

Who	When	What
GLA	05/11/2020	INSPECTION
GLA	07/10/2019	INSPECTION
GLA	07/10/2019	INSPECTION

The Equalizer. Copyright (c) 1999 - 2009. Licensed To: Township of Greenwood, County of Wexford, Michigan

Land Value Estimates for Land Table 4010.LAND VALUES

Description	Frontage	Depth	* Factors * Front	Depth	Rate	%Adj.	Reason	Value
ACREAGE			14.750 Acres		3,249	100		47,918
ROW			0.250 Acres		0	100		0
			15.00 Total Acres				Total Est. Land Value =	47,918

Land Improvement Cost Estimates

Description	Rate	Size	% Good	Cash Value
D/W/P: 3.5 Concrete	6.63	641	41	1,742
Total Estimated Land Improvements True Cash Value =				1,742

Year	Land Value	Building Value	Assessed Value	Board of Review	Tribunal/ Other	Taxable Value
2024	24,000	163,900	187,900			121,102C
2023	19,200	133,900	153,100			115,336C
2022	17,000	113,100	130,100			109,844C
2021	17,700	114,500	132,200			106,335C

*** Information herein deemed reliable but not guaranteed***

Building Type

X	Single Family
	Mobile Home
	Town Home
	Duplex
	A-Frame
X	Wood Frame

Building Style: PLAIN

Yr Built	Remodeled
2002	0

Condition: Good

Room List

	Basement
	1st Floor
	2nd Floor
	Bedrooms

(1) Exterior

	Wood/Shingle
X	Aluminum/Vinyl
	Brick
X	Insulation

(2) Windows

X	Many Avg. Few	X	Large Avg. Small

	Wood Sash
	Metal Sash
X	Vinyl Sash
	Double Hung
	Horiz. Slide
	Casement
	Double Glass
	Patio Doors
X	Storms & Screens

(3) Roof

X	Gable		Gambrel
	Hip		Mansard
	Flat		Shed

X	Asphalt Shingle

Chimney:

(3) Roof (cont.)

	Eavestrough
X	Insulation
0	Front Overhang
0	Other Overhang

(4) Interior

X	Drywall		Plaster
	Paneled		Wood T&G

Trim & Decoration

	Ex	X	Ord		Min

Size of Closets

	Lg	X	Ord		Small

Doors:		Solid	X	H.C.	

(5) Floors

Kitchen:
Other: Linoleum
Other: Carpeted

(6) Ceilings

X	Drywall

(7) Excavation

Basement: 728 S.F.
Crawl: 1400 S.F.
Slab: 0 S.F.
Height to Joists: 0.0

(8) Basement

	Conc. Block
	Poured Conc.
	Stone
	Treated Wood
	Concrete Floor

(9) Basement Finish

	Recreation SF
	Living SF
	Walkout Doors (B)
	No Floor SF
	Walkout Doors (A)

(10) Floor Support

Joists:
Unsupported Len:
Cntr.Sup:

(11) Heating/Cooling

X	Gas		Oil		Elec.
	Wood		Coal		Steam

	Forced Air w/o Ducts
X	Forced Air w/ Ducts
	Forced Hot Water
	Electric Baseboard
	Elec. Ceil. Radiant
	Radiant (in-floor)
	Electric Wall Heat
	Space Heater
	Wall/Floor Furnace
	Forced Heat & Cool
	Heat Pump
	No Heating/Cooling

	Central Air
	Wood Furnace

(12) Electric

200	Amps Service

No./Qual. of Fixtures

	Ex.	X	Ord.		Min

No. of Elec. Outlets

	Many	X	Ave.		Few

(13) Plumbing

2	Average Fixture(s)
	3 Fixture Bath
	2 Fixture Bath
	Softener, Auto
	Softener, Manual
	Solar Water Heat
	No Plumbing
	Extra Toilet
	Extra Sink
	Separate Shower
	Ceramic Tile Floor
	Ceramic Tile Wains
	Ceramic Tub Alcove
	Vent Fan

(14) Water/Sewer

	Public Water
	Public Sewer
1	Water Well
1	1000 Gal Septic
	2000 Gal Septic

Lump Sum Items:

(15) Built-ins

	Appliance Allow.
	Cook Top
	Dishwasher
	Garbage Disposal
	Bath Heater
	Vent Fan
	Hot Tub
	Unvented Hood
	Vented Hood
	Intercom
	Jacuzzi Tub
	Jacuzzi repl.Tub
	Oven
	Microwave
	Standard Range
	Self Clean Range
	Sauna
	Trash Compactor
	Central Vacuum
	Security System

(15) Fireplaces

	Interior 1 Story
	Interior 2 Story
	2nd/Same Stack
	Two Sided
	Exterior 1 Story
	Exterior 2 Story
	Prefab 1 Story
	Prefab 2 Story
	Heat Circulator
	Raised Hearth
	Wood Stove
	Direct-Vented Gas

Class: CD
Effec. Age: 22
Floor Area: 2,128
Total Base New : 336,615 E.C.F.
Total Depr Cost: 251,429 X 1.297
Estimated T.C.V: 326,104

(16) Porches/Decks

Area	Type
264	CGEP (1 Story)
90	Treated Wood

(17) Garage

Year Built:
Car Capacity:
Class: CD
Exterior: Siding
Brick Ven.: 0
Stone Ven.: 0
Common Wall: 1 Wall
Foundation: 42 Inch
Finished ?:
Auto. Doors: 0
Mech. Doors: 0
Area: 896
% Good: 0
Storage Area: 0
No Conc. Floor: 0

Bsmnt Garage:

Carport Area:
Roof:

Cost Est. for Res. Bldg: 1 Single Family PLAIN Cls CD Blt 2002
(11) Heating System: Forced Air w/ Ducts
Ground Area = 2128 SF Floor Area = 2128 SF.
Phy/Ab.Phy/Func/Econ/Comb. % Good=78/100/100/100/78
Building Areas

Stories	Exterior	Foundation	Size	Cost New	Depr. Cost	
1 Story	Siding	Basement	728			
1 Story	Siding	Crawl Space	1,400			
			Total:	241,585	188,438	
Other Additions/Adjustments						
Plumbing						
3 Fixture Bath			1	3,887	3,032	
Water/Sewer						
1000 Gal Septic			1	4,582	3,574	
Water Well, 100 Feet			1	5,680	4,430	
Porches						
CGEP (1 Story)			264	13,527	10,551	
Deck						
Treated Wood			90	2,382	1,858	
Garages						
Class: CD Exterior: Siding Foundation: 42 Inch (Unfinished)						
Base Cost			896	30,787	24,014	
Common Wall: 1 Wall			1	-2,529	-1,973	
Class: CD Exterior: Pole (Unfinished)						
Base Cost			2090	45,458	20,911	*4
No Concrete Floor			2090	-12,854	-5,913	
Local Cost Items						
WOOD LEAN TO DIRT			448	1,926	1,502	
SHED			280	2,184	1,005	*4
			Totals:	336,615	251,429	

<<<<< Calculations too long. See Valuation printout for complete pricing. >>>>>

*** Information herein deemed reliable but not guaranteed***

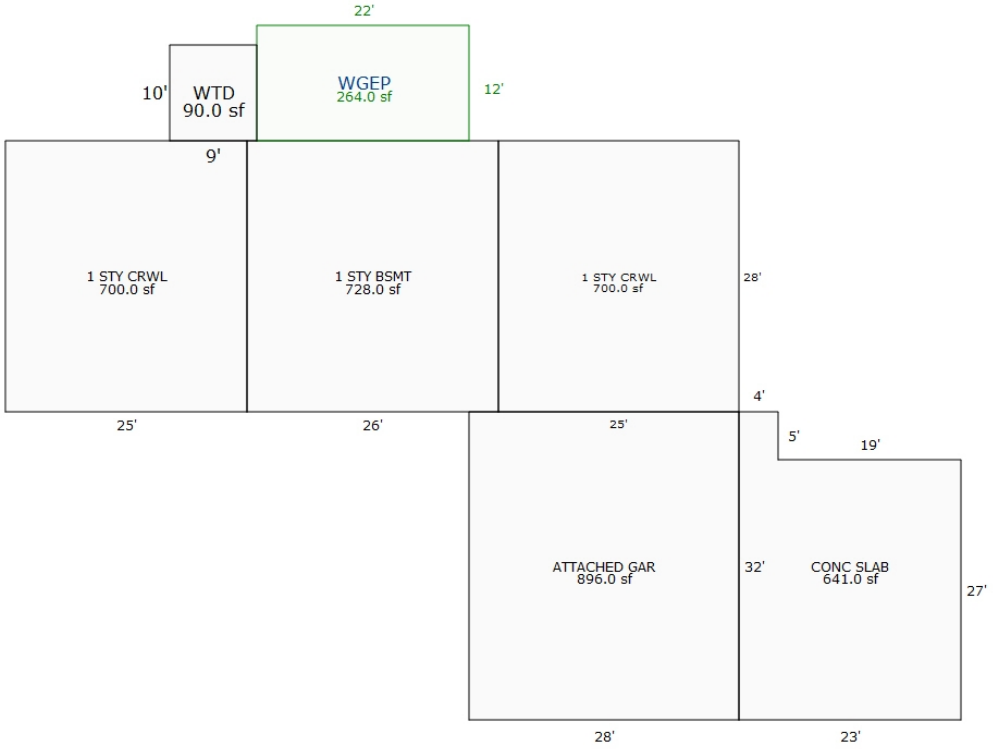

Sketch by Apex Sketch

*** Information herein deemed reliable but not guaranteed***

Parcel Number: 2410-36-2104 Jurisdiction: GREENWOOD TWP County: WEXFORD Printed on 02/15/2024

Grantor	Grantee	Sale Price	Sale Date	Inst. Type	Terms of Sale	Liber & Page	Verified By	Prcnt. Trans.
MOWERY, ROBERT J	PENIRSON, BRADLEY & ASHLEY	11,000	03/24/2023	WD	03-ARM'S LENGTH	694/2709	DEED	100.0
MOWERY, ROBERT J		11,000	03/20/2023	OTH	21-NOT USED/OTHER	694/2708	DEED	0.0
KUKUK, JOLENE M & ROBERT L	MOWERY, ROBERT J	1	11/29/2019	QC	21-NOT USED/OTHER	686 /799	DEED	100.0
BERGEN WALT & STACY	KUKUK, JOLENE M & ROBERT I	0	11/18/2016	QC	09-FAMILY	6782/651	DEED	0.0

Property Address

Owner's Name/Address

PENIRSON, BRADLEY & ASHLEY LYNN
5338 E 12 RD
MANTON MI 49663

Tax Description

N 660 FT OF W 330 FT OF W 1/4 OF NE 1/4 OF NW 1/4 5 A M/L GW. SEC. 36 T24N R10W-MANTON

Comments/Influences

Class: RESIDENTIAL-VACANT Zoning:

School: MANTON CONSOLIDATED SCHOOLS

P.R.E. 0%

:

2024 Est TCV 24,200

Building Permit(s)	Date	Number	Status

	Improved	X	Vacant

	Public Improvements
X	Dirt Road
	Gravel Road
	Paved Road
	Storm Sewer
	Sidewalk
	Water
	Sewer
X	Electric
	Gas
	Curb
	Street Lights
	Standard Utilities
	Underground Utils.

	Topography of Site
	Level
	Rolling
X	Low
	High
	Landscaped
X	Swamp
	Wooded
	Pond
	Waterfront
	Ravine
	Wetland
	Flood Plain
X	OPEN

Who	When	What
GLA	05/11/2020	INSPECTION
GLA	07/10/2019	INSPECTION
GLA	07/10/2019	INSPECTION

Land Value Estimates for Land Table 4010.LAND VALUES

Description	Frontage	Depth	* Factors * Front	Depth	Rate	%Adj.	Reason	Value
ACREAGE			4.750 Acres		5,095	100		24,200
ROW			0.250 Acres		0	100		0
			5.00 Total Acres		Total Est. Land Value =			24,200

Year	Land Value	Building Value	Assessed Value	Board of Review	Tribunal/ Other	Taxable Value
2024	12,100	0	12,100			12,100S
2023	10,400	0	10,400			7,770C
2022	7,400	0	7,400			7,400S
2021	8,500	0	8,500			7,199C

The Equalizer. Copyright (c) 1999 - 2009.
Licensed To: Township of Greenwood, County of Wexford, Michigan

*** Information herein deemed reliable but not guaranteed***

Parcel Number: 2410-36-2201 Jurisdiction: GREENWOOD TWP County: WEXFORD Printed on 02/15/2024

Grantor	Grantee	Sale Price	Sale Date	Inst. Type	Terms of Sale	Liber & Page	Verified By	Prcnt. Trans.
WILLIAMS, JAMES	WILLIAMS, JAMES & VICTORIA	0	03/16/2017	QC	14-INTO/OUT OF TRUST	6791/942	DEED	0.0
WILLIAMS, BEATRICE	WILLIAMS, JAMES & VICTORIA	82,000	05/14/2003	WD	03-ARM'S LENGTH	488:883	DEED	0.0

Property Address

6550 N 35 RD

Owner's Name/Address

WILLIAMS, JAMES & VICTORIA TRUST
9861 SHARON
TAYLOR MI 48180

Tax Description

S 505 FT OF W 1/2 OF SW 1/4 OF NW 1/4
7.65 A. M/L GW. SEC. 36 T24N R10W
-MANTON-

Comments/Influences

The Equalizer. Copyright (c) 1999 - 2009.
Licensed To: Township of Greenwood, County of Wexford, Michigan

Class: RESIDENTIAL-IMPROV Zoning:

School: MANTON CONSOLIDATED SCHOOLS

P.R.E. 15% 07/12/2022 Qual. Ag.

:

2024 Est TCV 200,880 TCV/TFA: 139.50

Building Permit(s)	Date	Number	Status

X Improved | Vacant

	Public Improvements
	Dirt Road
X	Gravel Road
	Paved Road
	Storm Sewer
	Sidewalk
	Water
	Sewer
X	Electric
	Gas
	Curb
	Street Lights
	Standard Utilities
	Underground Utils.

	Topography of Site
	Level
X	Rolling
	Low
	High
	Landscaped
X	Swamp
	Wooded
	Pond
	Waterfront
	Ravine
	Wetland
	Flood Plain
X	OPEN

Who	When	What
GLA	05/11/2020	INSPECTION
GLA	07/10/2019	INSPECTION
GLA	07/10/2019	INSPECTION

Land Value Estimates for Land Table 4010.LAND VALUES

Description	Frontage	Depth	* Factors * Front	Depth	Rate	%Adj.	Reason	Value
ACREAGE			6.780 Acres		5,112	100		34,659
ROW			0.870 Acres		0	100		0
			7.65 Total Acres		Total Est. Land Value =			34,659

Land Improvement Cost Estimates

Description	Rate	Size	% Good	Cash Value
D/W/P: 3.5 Concrete	6.63	1603	52	5,527
Total Estimated Land Improvements True Cash Value =				5,527

Year	Land Value	Building Value	Assessed Value	Board of Review	Tribunal/ Other	Taxable Value
2024	17,300	83,100	100,400			60,785C
2023	11,800	68,500	80,300			57,891C
2022	10,200	58,400	68,600		68,600W	55,135C
2021	11,500	59,300	70,800			53,374C

*** Information herein deemed reliable but not guaranteed***

Building Type

X	Single Family
	Mobile Home
	Town Home
	Duplex
	A-Frame
X	Wood Frame

Building Style: PLAIN

Yr Built	Remodeled
0	0

Condition: Good

Room List

	Basement
	1st Floor
	2nd Floor
	Bedrooms

(1) Exterior

X	Wood/Shingle
	Aluminum/Vinyl
	Brick
X	Insulation

(2) Windows

X	Many Avg. Few	X	Large Avg. Small

X	Wood Sash
	Metal Sash
	Vinyl Sash
	Double Hung
	Horiz. Slide
	Casement
	Double Glass
	Patio Doors
X	Storms & Screens

(3) Roof

X	Gable		Gambrel
	Hip		Mansard
	Flat		Shed

X	Asphalt Shingle

Chimney:

(3) Roof (cont.)

	Eavestrough
X	Insulation
0	Front Overhang
0	Other Overhang

(4) Interior

X	Drywall Paneled		Plaster Wood T&G

Trim & Decoration

	Ex	X	Ord		Min

Size of Closets

	Lg	X	Ord		Small

Doors: | | Solid | X | H.C.

(5) Floors

Kitchen:
Other: Linoleum
Other: Carpeted

(6) Ceilings

X	Drywall

(7) Excavation

Basement: 1440 S.F.
Crawl: 0 S.F.
Slab: 0 S.F.
Height to Joists: 0.0

(8) Basement

	Conc. Block
	Poured Conc.
	Stone
	Treated Wood
	Concrete Floor

(9) Basement Finish

	Recreation SF
	Living SF
	Walkout Doors (B)
	No Floor SF
	Walkout Doors (A)

(10) Floor Support

Joists:
Unsupported Len:
Cntr.Sup:

(11) Heating/Cooling

X	Gas		Oil		Elec.
	Wood		Coal		Steam

	Forced Air w/o Ducts
X	Forced Air w/ Ducts
	Forced Hot Water
	Electric Baseboard
	Elec. Ceil. Radiant
	Radiant (in-floor)
	Electric Wall Heat
	Space Heater
	Wall/Floor Furnace
	Forced Heat & Cool
	Heat Pump
	No Heating/Cooling

	Central Air
	Wood Furnace

(12) Electric

150	Amps Service

No./Qual. of Fixtures

	Ex.	X	Ord.		Min

No. of Elec. Outlets

	Many	X	Ave.		Few

(13) Plumbing

2	Average Fixture(s)
	3 Fixture Bath
	2 Fixture Bath
	Softener, Auto
	Softener, Manual
	Solar Water Heat
	No Plumbing
	Extra Toilet
	Extra Sink
	Separate Shower
	Ceramic Tile Floor
	Ceramic Tile Wains
	Ceramic Tub Alcove
	Vent Fan

(14) Water/Sewer

	Public Water
	Public Sewer
1	Water Well
1	1000 Gal Septic
	2000 Gal Septic

Lump Sum Items:

(15) Built-ins

	Appliance Allow.
	Cook Top
	Dishwasher
	Garbage Disposal
	Bath Heater
	Vent Fan
	Hot Tub
	Unvented Hood
	Vented Hood
	Intercom
	Jacuzzi Tub
	Jacuzzi repl.Tub
	Oven
	Microwave
	Standard Range
	Self Clean Range
	Sauna
	Trash Compactor
	Central Vacuum
	Security System

(15) Fireplaces

	Interior 1 Story
	Interior 2 Story
	2nd/Same Stack
	Two Sided
	Exterior 1 Story
	Exterior 2 Story
	Prefab 1 Story
	Prefab 2 Story
	Heat Circulator
	Raised Hearth
	Wood Stove
	Direct-Vented Gas

Class: CD
Effec. Age: 49
Floor Area: 1,440
Total Base New : 249,265 E.C.F.
Total Depr Cost: 123,897 X 1.297
Estimated T.C.V: 160,694

(16) Porches/Decks

Area	Type
105	WSEP (2 Story)
90	Brzwy, FW

(17) Garage

Year Built:
Car Capacity:
Class: CD
Exterior: Siding
Brick Ven.: 0
Stone Ven.: 0
Common Wall: 1/2 Wal
Foundation: 42 Inch
Finished ?:
Auto. Doors: 0
Mech. Doors: 0
Area: 576
% Good: 0
Storage Area: 0
No Conc. Floor: 0

Bsmnt Garage:

Carport Area:
Roof:

Cost Est. for Res. Bldg: 1 Single Family PLAIN Cls CD Blt 0
(11) Heating System: Forced Air w/ Ducts
Ground Area = 1440 SF Floor Area = 1440 SF.
Phy/Ab.Phy/Func/Econ/Comb. % Good=51/100/100/100/51
Building Areas

Stories	Exterior	Foundation	Size	Cost New	Depr. Cost	
1 Story	Siding	Basement	1,440			
			Total:	184,606	94,149	
Other Additions/Adjustments						
Plumbing						
3 Fixture Bath			1	3,887	1,982	
Water/Sewer						
1000 Gal Septic			1	4,582	2,337	
Water Well, 100 Feet			1	5,680	2,897	
Porches						
WSEP (2 Story)			105	8,924	4,551	
Garages						
Class: CD Exterior: Siding Foundation: 42 Inch (Unfinished)						
Base Cost			576	22,401	11,425	
Common Wall: 1/2 Wall			1	-1,261	-643	
Class: D Exterior: Pole (Unfinished)						
Base Cost			768	16,143	5,004	*3
Breezeways						
Frame Wall			90	4,303	2,195	
			Totals:	249,265	123,897	

Notes:
ECF (RESIDENTIAL) 1.297 => TCV: 160,694

*** Information herein deemed reliable but not guaranteed***

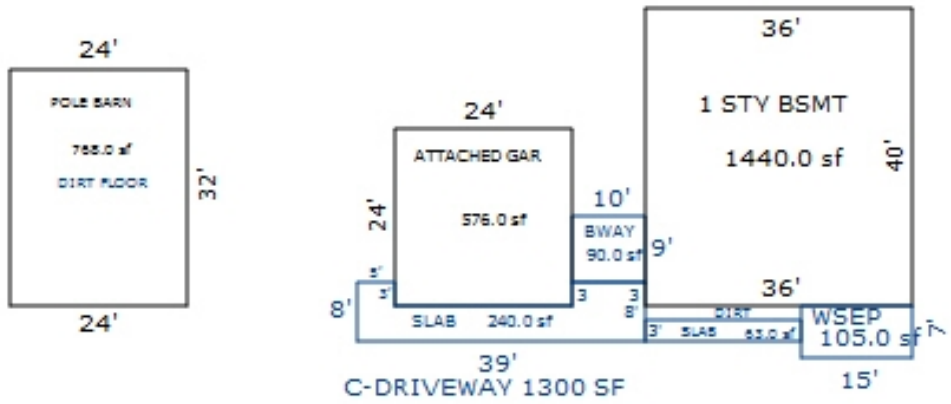

Sketch by Apex Sketch

*** Information herein deemed reliable but not guaranteed***

Parcel Number: 2410-36-2202 Jurisdiction: GREENWOOD TWP County: WEXFORD Printed on 02/15/2024

Grantor	Grantee	Sale Price	Sale Date	Inst. Type	Terms of Sale	Liber & Page	Verified By	Prcnt. Trans.

Property Address	Class: COMMERCIAL-VACANT	Zoning:	Building Permit(s)	Date	Number	Status
6830 N 35 RD	School: MANTON CONSOLIDATED SCHOOLS					
	P.R.E. 0%					
Owner's Name/Address	:					
CEMETERY	2024 Est TCV 0					

	Improved	X	Vacant

	Public Improvements
	Dirt Road
X	Gravel Road
	Paved Road
	Storm Sewer
	Sidewalk
	Water
	Sewer
X	Electric
	Gas
	Curb
	Street Lights
	Standard Utilities
	Underground Utils.

	Topography of Site
	Level
X	Rolling
X	Low
	High
	Landscaped
	Swamp
	Wooded
	Pond
	Waterfront
	Ravine
	Wetland
	Flood Plain
X	OPEN

Who	When	What
GLA	05/11/2020	INSPECTION
GLA	07/10/2019	INSPECTION
GLA	07/10/2019	INSPECTION

Tax Description

COM 40 RDS S OF NW COR OF NW 1/4 OF NW 1/4: TH E 22 RDS; S 28 RDS; W 22 RDS; N 28 RDS TO BEG. --3 A. M/L-- GW. SEC. 36 T24N R10W -MANTON-

Comments/Influences

Land Value Estimates for Land Table 4010.LAND VALUES

Description	Frontage	Depth	* Factors * Front	Depth	Rate	%Adj.	Reason	Value
ACREAGE			2.650 Acres		5,546	100		14,697
ROW			0.350 Acres		0	100		0
			3.00 Total Acres		Total Est. Land Value =			14,697

Year	Land Value	Building Value	Assessed Value	Board of Review	Tribunal/ Other	Taxable Value
2024	EXEMPT	EXEMPT	EXEMPT			EXEMPT
2023	EXEMPT	EXEMPT	EXEMPT			EXEMPT
2022	0	0	0			0
2021	0	0	0			0

The Equalizer. Copyright (c) 1999 - 2009. Licensed To: Township of Greenwood, County of Wexford, Michigan

*** Information herein deemed reliable but not guaranteed***

Parcel Number: 2410-36-2203 Jurisdiction: GREENWOOD TWP County: WEXFORD Printed on 02/15/2024

Grantor	Grantee	Sale Price	Sale Date	Inst. Type	Terms of Sale	Liber & Page	Verified By	Prcnt. Trans.
THOMAS, JESSIE PAUL & TREV	COLE, CAMERON M & MARIA L	40,000	11/05/2020	WD	03-ARM'S LENGTH	688/1706	AGENT	100.0
LYTLE, LUCILLE J LE	THOMAS, JESSIE PAUL & TREV	38,500	11/30/2018	WD	03-ARM'S LENGTH	683/2845	DEED	100.0
LYTLE, RICHARD	LYTLE, LUCILLE J LE	0	10/10/2017	WD	18-LIFE ESTATE	6817/08	DEED	0.0
HUGHES, JANETTE I.	LYTLE, RICHARD & LUCILLE	21,000	09/04/1996	WD	03-ARM'S LENGTH	351:251	DEED	0.0

Property Address

Owner's Name/Address

COLE, CAMERON M & MARIA L
8101 NORTH 103RD AVE
PEORIA AZ 85345

Tax Description

W 1/2 OF W 1/2 OF NW 1/4 EXC S 505 FT THEREOF & EXC COM AT SW COR OF NW 1/4; N 1534.2 FT TO POB: E 363 FT; N 462 FT; W 363 FT; S 462 FT TO POB. --27.46 A M/L-- GW. SEC. 36 T24N R10W - MANTON -

Comments/Influences

Class: RESIDENTIAL-VACANT Zoning:

School: MANTON CONSOLIDATED SCHOOLS

P.R.E. 0%

:

2024 Est TCV 69,901

Building Permit(s)	Date	Number	Status
MOBILE HOME	08/17/2005	PB12881	

	Improved	X	Vacant

	Public Improvements
X	Dirt Road
X	Gravel Road
	Paved Road
	Storm Sewer
	Sidewalk
	Water
	Sewer
X	Electric
	Gas
	Curb
	Street Lights
	Standard Utilities
	Underground Utils.

	Topography of Site
	Level
X	Rolling
X	Low
	High
	Landscaped
	Swamp
	Wooded
	Pond
	Waterfront
	Ravine
	Wetland
	Flood Plain
X	OPEN

Who	When	What
GLA	05/11/2020	INSPECTION
GLA	07/10/2019	INSPECTION
GLA	07/10/2019	INSPECTION

Land Value Estimates for Land Table 4010.LAND VALUES

Description	Frontage	Depth	* Factors * Front	Depth	Rate	%Adj.	Reason	Value
ACREAGE			25.680 Acres		2,722	100		69,901
ROW			1.780 Acres		0	100		0
			27.46 Total Acres		Total Est. Land Value =			69,901

Year	Land Value	Building Value	Assessed Value	Board of Review	Tribunal/ Other	Taxable Value
2024	35,000	0	35,000			28,812C
2023	32,100	0	32,100			27,440C
2022	28,000	0	28,000			26,134C
2021	25,300	0	25,300			25,300S

The Equalizer. Copyright (c) 1999 - 2009.
Licensed To: Township of Greenwood, County of Wexford, Michigan

*** Information herein deemed reliable but not guaranteed***

Parcel Number: 2410-36-2204 Jurisdiction: GREENWOOD TWP County: WEXFORD Printed on 02/15/2024

Grantor	Grantee	Sale Price	Sale Date	Inst. Type	Terms of Sale	Liber & Page	Verified By	Prcnt. Trans.
SK WYSONG EQUIPMENT SALES	LINES, REBECCA	51,000	05/28/2021	WD	03-ARM'S LENGTH	690/733	AGENT	100.0
KUKUK, ROBERT & JOLENE	SK WYSONG EQUIPMENT SALES	3,000	04/08/2013	WD	03-ARM'S LENGTH	657/2586	DEED	100.0

Property Address

Owner's Name/Address

LINES, REBECCA
P O BOX 128
LAPEER MI 48446

Tax Description

PAR 1; E 350.00 FT OF N 755.75 FT OF E 1/2 OF NW 1/4 OF NW 1/4. --6.07 A M/L-- GW SEC 36 T24N R10W -MANTON-

Comments/Influences

DO NOT INSPECT PROPERTY! SEE ATTACHMENT!

Class: RESIDENTIAL-IMPROV Zoning:

School: MANTON CONSOLIDATED SCHOOLS

P.R.E. 0%

:

2024 Est TCV 35,121 TCV/TFA: 0.00

Building Permit(s)	Date	Number	Status

X	Improved		Vacant

	Public Improvements
	Dirt Road
X	Gravel Road
	Paved Road
	Storm Sewer
	Sidewalk
	Water
	Sewer
X	Electric
	Gas
	Curb
	Street Lights
	Standard Utilities
	Underground Utils.

	Topography of Site
	Level
X	Rolling
X	Low
	High
	Landscaped
	Swamp
	Wooded
	Pond
	Waterfront
	Ravine
	Wetland
	Flood Plain
X	OPEN

Who	When	What
GLA	05/11/2020	INSPECTION
GLA	07/10/2019	INSPECTION
GLA	07/10/2019	INSPECTION

Land Value Estimates for Land Table 4010.LAND VALUES

Description	Frontage	Depth	* Factors * Front	Depth	Rate	%Adj.	Reason	Value
ACREAGE			5.810 Acres		5,112	100		29,701
ROW			0.260 Acres		0	100		0
			6.07 Total Acres		Total Est. Land Value =			29,701

Year	Land Value	Building Value	Assessed Value	Board of Review	Tribunal/ Other	Taxable Value
2024	14,900	2,700	17,600			12,017C
2023	11,200	2,400	13,600			11,445C
2022	8,700	2,200	10,900			10,900S
2021	9,900	2,400	12,300			10,287C

The Equalizer. Copyright (c) 1999 - 2009.
Licensed To: Township of Greenwood, County of Wexford, Michigan

*** Information herein deemed reliable but not guaranteed***

Building Type

X	Single Family
	Mobile Home
	Town Home
	Duplex
	A-Frame
X	Wood Frame

Building Style: PLAIN

Yr Built	Remodeled
0	0

Condition: Good

Room List

	Basement
	1st Floor
	2nd Floor
	Bedrooms

(1) Exterior

	Wood/Shingle
X	Aluminum/Vinyl
	Brick
X	Insulation

(2) Windows

	Many		Large
X	Avg.	X	Avg.
	Few		Small

	Wood Sash
	Metal Sash
X	Vinyl Sash
	Double Hung
	Horiz. Slide
	Casement
	Double Glass
	Patio Doors
X	Storms & Screens

(3) Roof

X	Gable		Gambrel
	Hip		Mansard
	Flat		Shed

X	Asphalt Shingle

Chimney:

(3) Roof (cont.)

	Eavestrough
X	Insulation
0	Front Overhang
0	Other Overhang

(4) Interior

X	Drywall		Plaster
	Paneled		Wood T&G

Trim & Decoration

	Ex	X	Ord		Min

Size of Closets

	Lg	X	Ord		Small

Doors:		Solid	X	H.C.	

(5) Floors

Kitchen:
Other: Linoleum
Other: Carpeted

(6) Ceilings

X	Drywall		

(7) Excavation

Basement: 0 S.F.
Crawl: 0 S.F.
Slab: 0 S.F.
Height to Joists: 0.0

(8) Basement

	Conc. Block
	Poured Conc.
	Stone
	Treated Wood
	Concrete Floor

(9) Basement Finish

	Recreation SF
	Living SF
	Walkout Doors (B)
	No Floor SF
	Walkout Doors (A)

(10) Floor Support

Joists:
Unsupported Len:
Cntr.Sup:

(11) Heating/Cooling

X	Gas		Oil		Elec.
	Wood		Coal		Steam

	Forced Air w/o Ducts
X	Forced Air w/ Ducts
	Forced Hot Water
	Electric Baseboard
	Elec. Ceil. Radiant
	Radiant (in-floor)
	Electric Wall Heat
	Space Heater
	Wall/Floor Furnace
	Forced Heat & Cool
	Heat Pump
	No Heating/Cooling

	Central Air
	Wood Furnace

(12) Electric

150	Amps Service

No./Qual. of Fixtures

	Ex.	X	Ord.		Min

No. of Elec. Outlets

	Many	X	Ave.		Few

(13) Plumbing

	Average Fixture(s)
1	3 Fixture Bath
	2 Fixture Bath
	Softener, Auto
	Softener, Manual
	Solar Water Heat
	No Plumbing
	Extra Toilet
	Extra Sink
	Separate Shower
	Ceramic Tile Floor
	Ceramic Tile Wains
	Ceramic Tub Alcove
	Vent Fan

(14) Water/Sewer

	Public Water
	Public Sewer
	Water Well
	1000 Gal Septic
	2000 Gal Septic

Lump Sum Items:

(15) Built-ins

	Appliance Allow.
	Cook Top
	Dishwasher
	Garbage Disposal
	Bath Heater
	Vent Fan
	Hot Tub
	Unvented Hood
	Vented Hood
	Intercom
	Jacuzzi Tub
	Jacuzzi repl.Tub
	Oven
	Microwave
	Standard Range
	Self Clean Range
	Sauna
	Trash Compactor
	Central Vacuum
	Security System

(15) Fireplaces

	Interior 1 Story
	Interior 2 Story
	2nd/Same Stack
	Two Sided
	Exterior 1 Story
	Exterior 2 Story
	Prefab 1 Story
	Prefab 2 Story
	Heat Circulator
	Raised Hearth
	Wood Stove
	Direct-Vented Gas

Class: CD
Effec. Age: 5
Floor Area: 0
Total Base New : 4,399 E.C.F.
Total Depr Cost: 4,179 X 1.297
Estimated T.C.V: 5,420

(16) Porches/Decks

Area	Type

(17) Garage

Year Built:
Car Capacity:
Class:
Exterior:
Brick Ven.:
Stone Ven.:
Common Wall:
Foundation:
Finished ?:
Auto. Doors:
Mech. Doors:
Area:
% Good:
Storage Area:
No Conc. Floor:

Bsmnt Garage:

Carport Area:
Roof:

Cost Est. for Res. Bldg: 1 Single Family PLAIN Cls CD Blt 0
(11) Heating System: Forced Air w/ Ducts
Ground Area = 0 SF Floor Area = 0 SF.
Phy/Ab.Phy/Func/Econ/Comb. % Good=95/100/100/100/95
Building Areas

Stories	Exterior	Foundation	Size	Cost New	Depr. Cost
Other Additions/Adjustments					
Local Cost Items					
SHED			564	4,399	4,179
			Totals:	4,399	4,179

Notes:
ECF (RESIDENTIAL) 1.297 => TCV: 5,420

*** Information herein deemed reliable but not guaranteed***

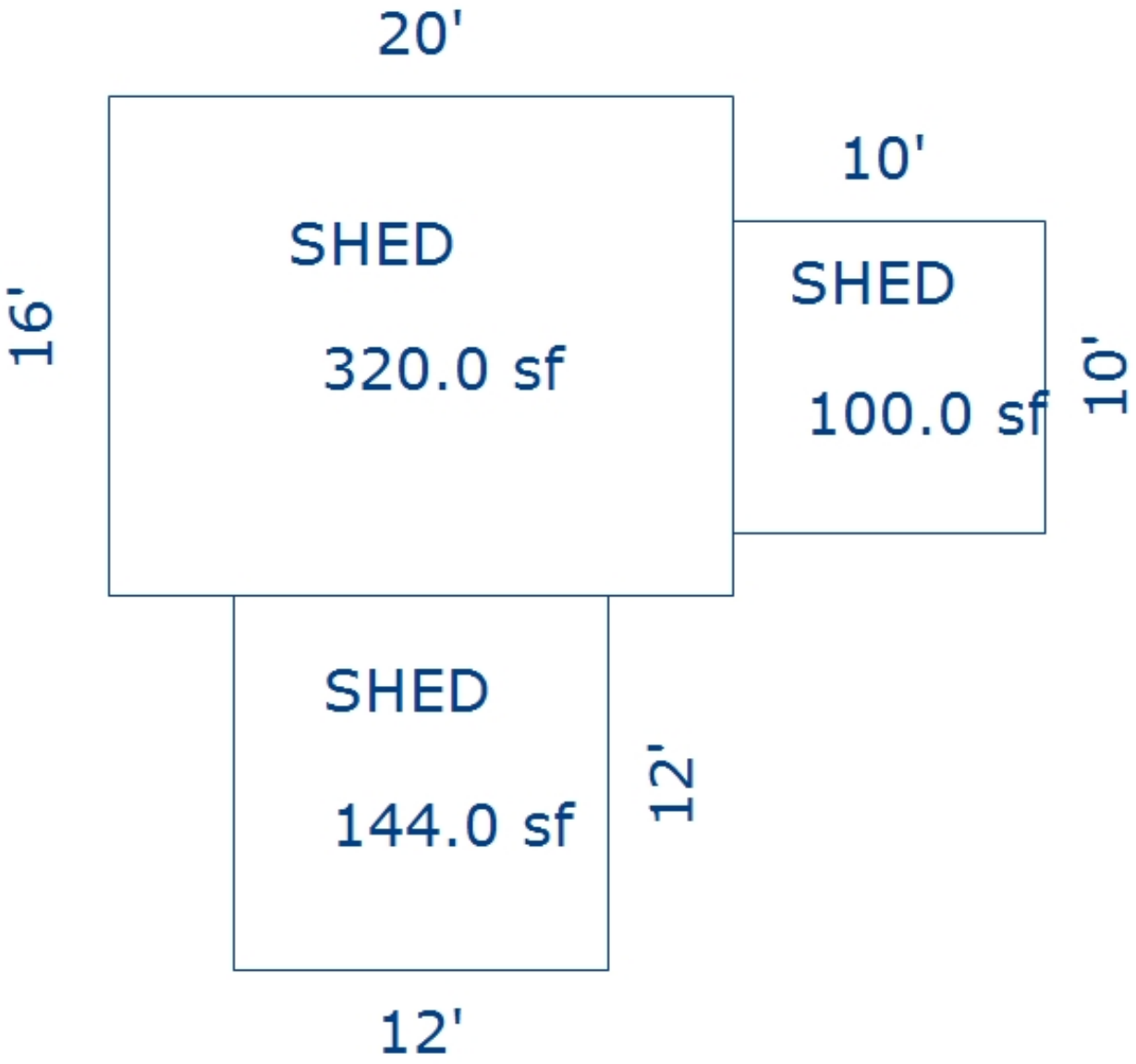

*** Information herein deemed reliable but not guaranteed***

Parcel Number: 2410-36-2205 Jurisdiction: GREENWOOD TWP County: WEXFORD Printed on 02/15/2024

Grantor	Grantee	Sale Price	Sale Date	Inst. Type	Terms of Sale	Liber & Page	Verified By	Prcnt. Trans.
KUKUK, ROBERT & JOLENE	MAES, JOSH & ERIN	30,000	01/06/2012	WD	03-ARM'S LENGTH	644/2276	DEED	100.0
LYTLE, RICHARD & LUCILLE	KUKUK, ROBERT & JOLENE	11,500	08/05/2005	WD	03-ARM'S LENGTH	576:27	DEED	0.0
LYTLE, RICHARD & LUCILLE	KUKUK, ROBERT & JOLENE	11,500	08/04/2005	WD	03-ARM'S LENGTH	576:27	DEED	0.0

Property Address

5144 E 12 RD

Owner's Name/Address

MAES, JOSH & ERIN
5144 E 12 RD
MANTON MI 49663

Tax Description

PAR 2; E 640.99 FT OF N 755.75 FT OF E 1/2 OF NW 1/4 OF NW 1/4 EXC E 350 FT. --5.05 A M/L-- GW SEC 36 T24N R10W -MANTON-

Comments/Influences

The Equalizer. Copyright (c) 1999 - 2009. Licensed To: Township of Greenwood, County of Wexford, Michigan

Class: RESIDENTIAL-IMPROV Zoning:

School: MANTON CONSOLIDATED SCHOOLS

P.R.E. 100% / /

:

2024 Est TCV 58,421 TCV/TFA: 48.04

Building Permit(s)	Date	Number	Status
MOBILE HOME	11/08/2005	PP4060	
RESIDENTIAL - REMODEL	10/13/2005	PM8694	
MOBILE HOME	10/06/2005	PE17137	

X Improved | Vacant

	Public Improvements
	Dirt Road
X	Gravel Road
	Paved Road
	Storm Sewer
	Sidewalk
	Water
	Sewer
X	Electric
	Gas
	Curb
	Street Lights
	Standard Utilities
	Underground Utils.

	Topography of Site
	Level
X	Rolling
X	Low
	High
	Landscaped
	Swamp
	Wooded
	Pond
	Waterfront
	Ravine
	Wetland
	Flood Plain
X	OPEN

Who	When	What
GLA	05/11/2020	INSPECTION
GLA	07/10/2019	INSPECTION
GLA	07/10/2019	INSPECTION

Land Value Estimates for Land Table 4010.LAND VALUES

Description	Frontage	Depth	* Factors * Front	Depth	Rate	%Adj.	Reason	Value
	293.40	749.63	1.0000	0.0000	0	100*		0
ACREAGE			4.830 Acres		5,100	100		24,635
ROW			0.220 Acres		0	100		0

* denotes lines that do not contribute to the total acreage calculation.

293 Actual Front Feet, 5.05 Total Acres Total Est. Land Value = 24,635

Land Improvement Cost Estimates

Description	Rate	Size	% Good	Cash Value
Wood Frame	31.33	16	16	80
Total Estimated Land Improvements True Cash Value =				80

Year	Land Value	Building Value	Assessed Value	Board of Review	Tribunal/ Other	Taxable Value
2024	12,300	16,900	29,200			18,936C
2023	10,500	13,600	24,100			18,035C
2022	7,400	11,400	18,800			17,177C
2021	8,500	9,700	18,200			16,629C

*** Information herein deemed reliable but not guaranteed***

Building Type

	Single Family
X	Mobile Home
	Town Home
	Duplex
	A-Frame

X	Wood Frame

Building Style: SWT/DWT

Yr Built	Remodeled
0	0

Condition: Good

Room List

	Basement
	1st Floor
	2nd Floor
	Bedrooms

(1) Exterior

	Wood/Shingle
X	Aluminum/Vinyl
	Brick
X	Insulation

(2) Windows

	Many		Large
X	Avg.	X	Avg.
	Few		Small

	Wood Sash
	Metal Sash
X	Vinyl Sash
	Double Hung
	Horiz. Slide
	Casement
	Double Glass
	Patio Doors
X	Storms & Screens

(3) Roof

X	Gable		Gambrel
	Hip		Mansard
	Flat		Shed

X	Asphalt Shingle

Chimney:

(3) Roof (cont.)

	Eavestrough
X	Insulation
0	Front Overhang
0	Other Overhang

(4) Interior

X	Drywall		Plaster
	Paneled		Wood T&G

Trim & Decoration

	Ex	X	Ord		Min

Size of Closets

	Lg	X	Ord		Small

Doors:		Solid	X	H.C.	

(5) Floors

Kitchen:
Other: Linoleum
Other: Carpeted

(6) Ceilings

X	Drywall		

(7) Excavation

Basement: 0 S.F.
Crawl: 0 S.F.
Slab: 0 S.F.
Height to Joists: 0.0

(8) Basement

	Conc. Block
	Poured Conc.
	Stone
	Treated Wood
	Concrete Floor

(9) Basement Finish

	Recreation SF
	Living SF
	Walkout Doors (B)
	No Floor SF
	Walkout Doors (A)

(10) Floor Support

Joists:
Unsupported Len:
Cntr.Sup:

(11) Heating/Cooling

X	Gas		Oil		Elec.
	Wood		Coal		Steam

X	Forced Warm Air
	Wall Furnace
	Warm & Cool Air
	Heat Pump

	Central Air
	Wood Furnace

(12) Electric

150	Amps Service

No./Qual. of Fixtures

	Ex.	X	Ord.		Min

No. of Elec. Outlets

	Many	X	Ave.		Few

(13) Plumbing

	Average Fixture(s)
1	3 Fixture Bath
	2 Fixture Bath
	Softener, Auto
	Softener, Manual
	Solar Water Heat
	No Plumbing
	Extra Toilet
	Extra Sink
	Separate Shower
	Ceramic Tile Floor
	Ceramic Tile Wains
	Ceramic Tub Alcove
	Vent Fan

(14) Water/Sewer

	Public Water
	Public Sewer
1	Water Well
1	1000 Gal Septic
	2000 Gal Septic

Lump Sum Items:

(15) Built-ins

	Appliance Allow.
	Cook Top
	Dishwasher
	Garbage Disposal
	Bath Heater
	Vent Fan
	Hot Tub
	Unvented Hood
	Vented Hood
	Intercom
	Jacuzzi Tub
	Jacuzzi repl.Tub
	Oven
	Microwave
	Standard Range
	Self Clean Range
	Sauna
	Trash Compactor
	Central Vacuum
	Security System

(15) Fireplaces

	Interior 1 Story
	Interior 2 Story
	2nd/Same Stack
	Two Sided
	Exterior 1 Story
	Exterior 2 Story
	Prefab 1 Story
	Prefab 2 Story
	Heat Circulator
	Raised Hearth
	Wood Stove
	Direct-Vented Gas

Class: Fair
Effec. Age: 25
Floor Area:
Total Base New : 74,090 E.C.F.
Total Depr Cost: 25,988 X 1.297
Estimated T.C.V: 33,706

(16) Porches/Decks

Area	Type
12	WPP

(17) Garage

Year Built:
Car Capacity:
Class:
Exterior:
Brick Ven.:
Stone Ven.:
Common Wall:
Foundation:
Finished ?:
Auto. Doors:
Mech. Doors:
Area:
% Good:
Storage Area:
No Conc. Floor:

Bsmnt Garage:

Carport Area:
Roof:

Cost Est. for Res. Bldg: 1 Mobile Home SWT/DWT Cls Fair Blt 0
(11) Heating System: Wall Furnace
Ground Area = 1216 SF Floor Area = 1216 SF.
Phy/Ab.Phy/Func/Econ/Comb. % Good=35/100/100/100/35
Building Areas

Type	Ext. Walls	Roof/Fnd.	Size	Cost New	Depr. Cost	
Main Home	Siding	Comp.Shingle	1216			
			Total:	57,934	20,278	
Other Additions/Adjustments						
Skirting, Metal or Vinyl, Vertical			184	2,052	718	
Water/Sewer						
1000 Gal Septic			1	4,582	1,604	
Water Well, 150 Feet			1	8,419	2,947	
Porches						
WPP			12	604	211	
Local Cost Items						
SHED			64	499	230	*4
			Totals:	74,090	25,988	

Notes:
ECF (RESIDENTIAL) 1.297 => TCV: 33,706

*** Information herein deemed reliable but not guaranteed***

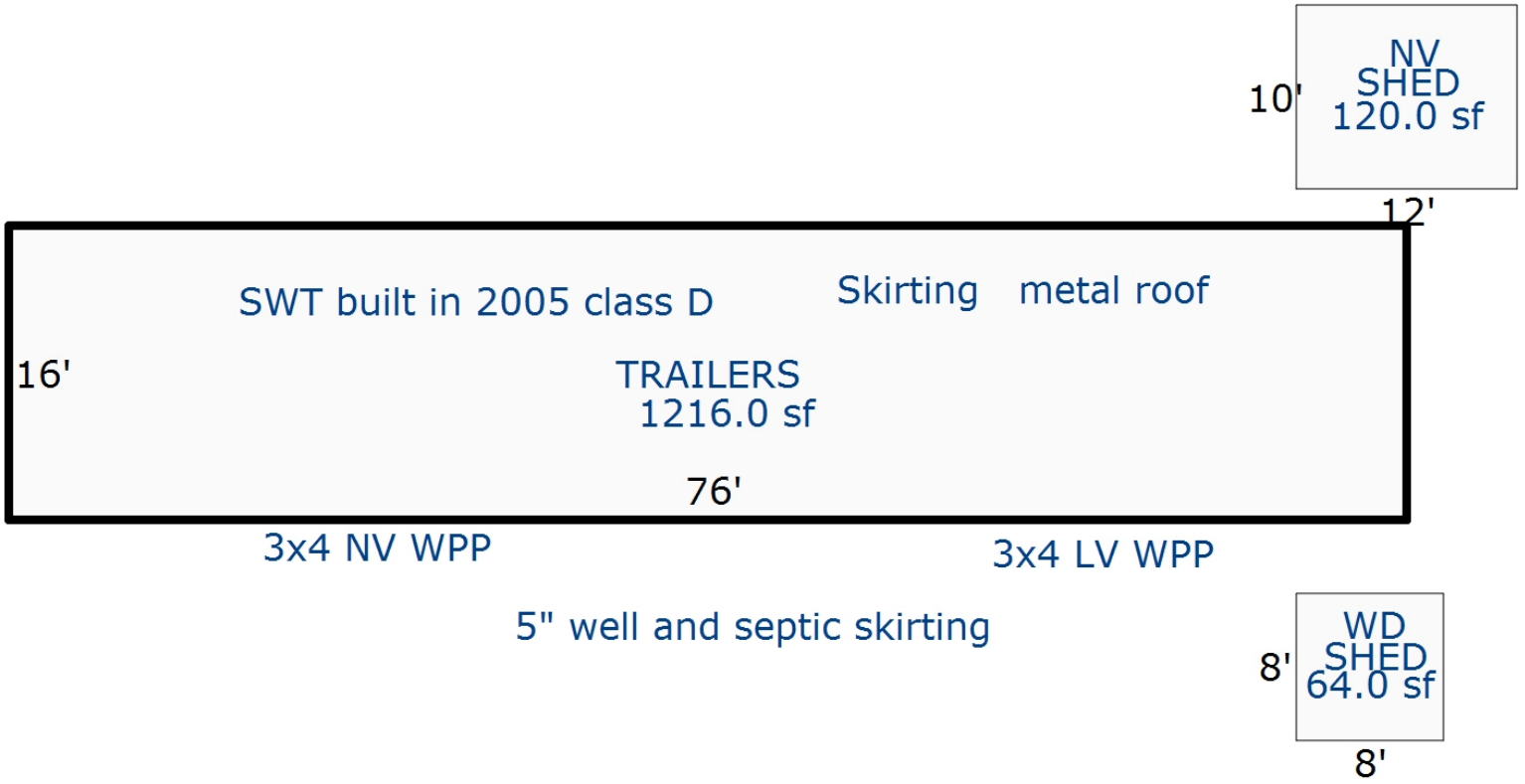

Sketch by Apex Sketch

*** Information herein deemed reliable but not guaranteed***

Parcel Number: 2410-36-2301 Jurisdiction: GREENWOOD TWP County: WEXFORD Printed on 02/15/2024

Grantor	Grantee	Sale Price	Sale Date	Inst. Type	Terms of Sale	Liber & Page	Verified By	Prcnt. Trans.
WILLIS CHARLOTTE MAY	WILLIS, PHILLIP W	0	07/09/2021	QC	09-FAMILY	690/2210	DEED	0.0
HARDEN, STEVEN R & PATRICI	WILLIS CHARLOTTE MAY	47,500	02/26/2016	WD	03-ARM'S LENGTH	676 /2978	DEED	100.0
WRIGHT, JAMES & MARSTELLA	HARDEN, STEVEN R & PATRICI	25,000	07/30/2009	WD	03-ARM'S LENGTH	623/563	DEED	100.0
WRIGHT, TIMOTHY S & SUSAN	WRIGHT, JAMES & MARSTELLA	34,900	07/31/2008	WD	09-FAMILY	613/1528	DEED	0.0

Property Address

5201 E 12 1/2 RD

Owner's Name/Address

WILLIS, PHILLIP W
5201 E 12 1/2 RD
MANTON MI 49663

Tax Description

COM AT W 1/4 COR OF SEC; E 1011.73 FT TO POB: N 315 FT; E 277 FT; S 315 FT; W 277 FT TO POB. --2 A M/L-- GW. SEC. 36 T24N R10W -MANTON-

Comments/Influences

The Equalizer. Copyright (c) 1999 - 2009.
Licensed To: Township of Greenwood, County of Wexford, Michigan

Class: RESIDENTIAL-IMPROV Zoning:

School: MANTON CONSOLIDATED SCHOOLS

P.R.E. 100% 07/09/2021

:

2024 Est TCV 93,496 TCV/TFA: 73.74

Building Permit(s)	Date	Number	Status
Electrical	07/08/2009	PE09-18530	
RESIDENTIAL - REMODEL	07/10/2000	PM4247	

X	Improved		Vacant

	Public Improvements
X	Dirt Road
X	Gravel Road
	Paved Road
	Storm Sewer
	Sidewalk
	Water
	Sewer
X	Electric
	Gas
	Curb
	Street Lights
	Standard Utilities
	Underground Utils.

	Topography of Site
	Level
X	Rolling
	Low
	High
	Landscaped
X	Swamp
	Wooded
	Pond
	Waterfront
	Ravine
	Wetland
	Flood Plain
X	PINES

Who	When	What
GLA	05/11/2020	INSPECTION
GLA	07/10/2019	INSPECTION
GLA	07/10/2019	INSPECTION

Land Value Estimates for Land Table 4010.LAND VALUES

Description	Frontage	Depth	* Factors * Front	Depth	Rate	%Adj.	Reason	Value
ACREAGE			1.789 Acres		7,459	100		13,345
ROW			0.211 Acres		0	100		0
			2.00 Total Acres		Total Est. Land Value =			13,345

Land Improvement Cost Estimates

Description	Rate	Size	% Good	Cash Value
Wood Frame	18.03	952	42	7,209
Total Estimated Land Improvements True Cash Value =				7,209

Year	Land Value	Building Value	Assessed Value	Board of Review	Tribunal/ Other	Taxable Value
2024	6,700	40,000	46,700			25,298C
2023	5,100	32,900	38,000			24,094C
2022	4,200	27,800	32,000			22,947C
2021	4,700	24,200	28,900		28,900W	22,214C

*** Information herein deemed reliable but not guaranteed***

Building Type

	Single Family
X	Mobile Home
	Town Home
	Duplex
	A-Frame

X	Wood Frame

Building Style: SWT/DWT

Yr Built	Remodeled
0	0

Condition: Fair

Room List

	Basement
	1st Floor
	2nd Floor
	Bedrooms

(1) Exterior

	Wood/Shingle
	Aluminum/Vinyl
	Brick
X	Aluminum
	Insulation

(2) Windows

X	Many Avg. Few	X	Large Avg. Small

X	Wood Sash
	Metal Sash
	Vinyl Sash
	Double Hung
X	Horiz. Slide
	Casement
	Double Glass
	Patio Doors
X	Storms & Screens

(3) Roof

X	Gable		Gambrel
	Hip		Mansard
	Flat		Shed

X	Asphalt Shingle
	Metal

Chimney: Metal

(3) Roof (cont.)

	Eavestrough
	Insulation
0	Front Overhang
0	Other Overhang

(4) Interior

	Drywall		Plaster
	Paneled		Wood T&G

Trim & Decoration

	Ex	X	Ord		Min

Size of Closets

	Lg	X	Ord		Small

Doors:		Solid	X	H.C.	

(5) Floors

Kitchen:
Other:
Other:

(6) Ceilings

(7) Excavation

Basement: 0 S.F.
Crawl: 400 S.F.
Slab: 0 S.F.
Height to Joists: 0.0

(8) Basement

	Conc. Block
	Poured Conc.
	Stone
	Treated Wood
	Concrete Floor

(9) Basement Finish

	Recreation	SF
	Living	SF
	Walkout Doors	(B)
	No Floor	SF
	Walkout Doors	(A)

(10) Floor Support

Joists:
Unsupported Len:
Cntr.Sup:

(11) Heating/Cooling

X	Gas		Oil		Elec.
	Wood		Coal		Steam

X	Forced Warm Air
	Wall Furnace
	Warm & Cool Air
	Heat Pump

X	Central Air
	Wood Furnace

(12) Electric

0	Amps Service

No./Qual. of Fixtures

	Ex.	X	Ord.		Min

No. of Elec. Outlets

	Many	X	Ave.		Few

(13) Plumbing

2	Average Fixture(s)
	3 Fixture Bath
	2 Fixture Bath
	Softener, Auto
	Softener, Manual
	Solar Water Heat
	No Plumbing
	Extra Toilet
	Extra Sink
	Separate Shower
	Ceramic Tile Floor
	Ceramic Tile Wains
	Ceramic Tub Alcove
	Vent Fan

(14) Water/Sewer

	Public Water
	Public Sewer
1	Water Well
1	1000 Gal Septic
	2000 Gal Septic

Lump Sum Items:
1

(15) Built-ins

	Appliance Allow.
	Cook Top
	Dishwasher
	Garbage Disposal
	Bath Heater
	Vent Fan
	Hot Tub
	Unvented Hood
	Vented Hood
	Intercom
	Jacuzzi Tub
	Jacuzzi repl.Tub
	Oven
	Microwave
	Standard Range
	Self Clean Range
	Sauna
	Trash Compactor
	Central Vacuum
	Security System

(15) Fireplaces

	Interior 1 Story
	Interior 2 Story
	2nd/Same Stack
	Two Sided
	Exterior 1 Story
	Exterior 2 Story
	Prefab 1 Story
	Prefab 2 Story
	Heat Circulator
	Raised Hearth
	Wood Stove
	Direct-Vented Gas

Class: Low
Effec. Age: 20
Floor Area:
Total Base New : 122,258 E.C.F.
Total Depr Cost: 56,239 X 1.297
Estimated T.C.V: 72,942

(16) Porches/Decks

Area	Type
614	4in Concrete
96	Treated Wood

(17) Garage

Year Built:
Car Capacity:
Class: CD
Exterior: Pole
Brick Ven.: 0
Stone Ven.: 0
Common Wall: Detache
Foundation: 18 Inch
Finished ?:
Auto. Doors: 0
Mech. Doors: 0
Area: 1280
% Good: 0
Storage Area: 0
No Conc. Floor: 0

Bsmnt Garage:

Carport Area:
Roof:

Cost Est. for Res. Bldg: 1 Mobile Home SWT/DWT Cls Low Blt 0
(11) Heating System: Forced Warm Air, Air Conditioning
Ground Area = 1268 SF Floor Area = 1268 SF.
Phy/Ab.Phy/Func/Econ/Comb. % Good=46/100/100/100/46

Building Areas

Type	Ext. Walls	Roof/Fnd.	Size	Cost New	Depr. Cost
Main Home	Ribbed	Metal	868		
Addition	Siding	Crawl	400		
			Total:	67,785	31,181
Other Additions/Adjustments					
Skirting, Metal or Vinyl, Vertical			132	1,434	660
Plumbing					
3 Fixture Bath			1	2,387	1,098
Water/Sewer					
1000 Gal Septic			1	4,293	1,975
Water Well, 100 Feet			1	5,545	2,551
Deck					
Treated Wood			96	2,401	1,104
Porches					
4in Concrete			614	4,089	1,881
Garages					
Class: CD Exterior: Pole (Unfinished)					
Base Cost			1280	27,840	12,806
Local Cost Items					
FREE STANDING ROOF			868	6,284	2,891
Lump Sum Items					
OLD BARN FOR HORSES IN				200	92
			Totals:	122,258	56,239

Notes:
ECF (RESIDENTIAL) 1.297 => TCV: 72,942

*** Information herein deemed reliable but not guaranteed***

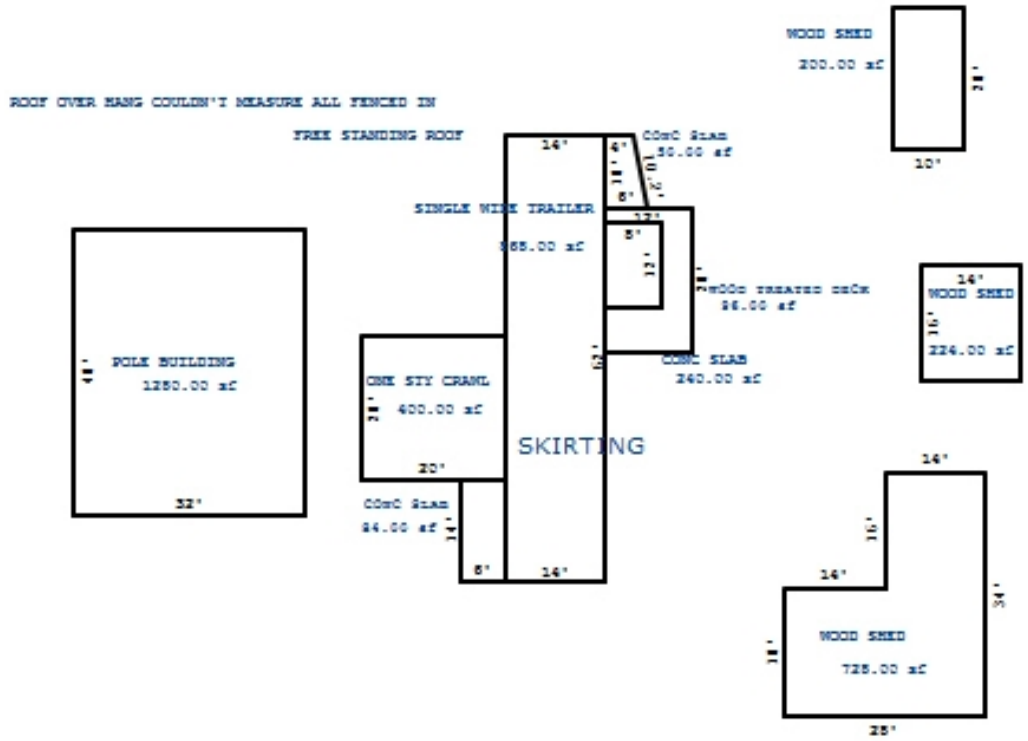

Sketch by Apex Sketch

*** Information herein deemed reliable but not guaranteed***

Parcel Number: 2410-36-2302 Jurisdiction: GREENWOOD TWP County: WEXFORD Printed on 02/15/2024

Grantor	Grantee	Sale Price	Sale Date	Inst. Type	Terms of Sale	Liber & Page	Verified By	Prcnt. Trans.
SPARKS DAVID S	MIKULA CHAD	265,000	12/24/2023	WD	03-ARM'S LENGTH	694-2787	DEED	100.0
CURTISS, DAVID L & KATHY M	SPARKS DAVID S	162,500	03/17/2020	WD	03-ARM'S LENGTH	6862/783	DEED	100.0
WRIGHT, JAMES C SR & MARST	CURTISS, DAVID L & KATHY M	29,000	11/13/2013	WD	03-ARM'S LENGTH	663/2991	DEED	100.0

Property Address

5157 E 12 1/2 RD

Owner's Name/Address

MIKULA CHAD
2473 E BLAIR TOWNHALL RD
KINGSLEY MI 49649

Tax Description

E 1/2 OF SW 1/4 OF NW 1/4 EXC S 315 FT OF E 277 FT & E 40 RDS OF S 34 RDS OF NW 1/4 OF NW 1/4 --26.5 A M/L-- GW SEC 36 T24N R10W -MANTON- [[ASSESSED W/ 36-2301 '01

Comments/Influences

The Equalizer. Copyright (c) 1999 - 2009.
Licensed To: Township of Greenwood, County of Wexford, Michigan

Class: RESIDENTIAL-IMPROV Zoning:
School: MANTON CONSOLIDATED SCHOOLS
P.R.E. 0%
:
2024 Est TCV 237,306 TCV/TFA: 274.66

Building Permit(s)	Date	Number	Status
RESIDENTIAL - NEW	08/05/2014	PB14-0188	

X Improved | Vacant

	Public Improvements
	Dirt Road
X	Gravel Road
	Paved Road
	Storm Sewer
	Sidewalk
	Water
	Sewer
X	Electric
	Gas
	Curb
	Street Lights
	Standard Utilities
	Underground Utils.

	Topography of Site
	Level
X	Rolling
X	Low
	High
	Landscaped
X	Swamp
X	Wooded
	Pond
	Waterfront
	Ravine
	Wetland
	Flood Plain
X	OPEN/PINES

Who	When	What
GLA	05/11/2020	INSPECTION
GLA	07/10/2019	INSPECTION
GLA	07/10/2019	INSPECTION

Land Value Estimates for Land Table 4010.LAND VALUES

Description	Frontage	Depth	* Factors * Front	Depth	Rate	%Adj.	Reason	Value
ACREAGE			26.220 Acres		2,722	75	LOW & SWANPY	53,528
ROW			0.280 Acres		0	100		0
			26.50 Total Acres		Total Est. Land Value =			53,528

Year	Land Value	Building Value	Assessed Value	Board of Review	Tribunal/ Other	Taxable Value
2024	26,800	91,900	118,700			118,700S
2023	24,600	74,800	99,400			88,515C
2022	21,400	62,900	84,300			84,300S
2021	19,100	63,500	82,600			82,600S

*** Information herein deemed reliable but not guaranteed***

Building Type

X	Single Family
	Mobile Home
	Town Home
	Duplex
	A-Frame
X	Wood Frame

Building Style: PLAIN

Yr Built	Remodeled
2015	0

Condition: Good

Room List

	Basement
	1st Floor
	2nd Floor
	Bedrooms

(1) Exterior

	Wood/Shingle
X	Aluminum/Vinyl
	Brick
X	Insulation

(2) Windows

X	Many Avg. Few	X	Large Avg. Small

	Wood Sash
	Metal Sash
X	Vinyl Sash
	Double Hung
	Horiz. Slide
	Casement
	Double Glass
	Patio Doors
X	Storms & Screens

(3) Roof

X	Gable		Gambrel
	Hip		Mansard
	Flat		Shed

X	Asphalt Shingle

Chimney:

(3) Roof (cont.)

	Eavestrough
X	Insulation
0	Front Overhang
0	Other Overhang

(4) Interior

X	Drywall		Plaster
	Paneled		Wood T&G

Trim & Decoration

	Ex	X	Ord		Min

Size of Closets

	Lg	X	Ord		Small

Doors:		Solid	X	H.C.	

(5) Floors

Kitchen:
Other: Linoleum
Other: Carpeted

(6) Ceilings

X	Drywall		

(7) Excavation

Basement: 864 S.F.
Crawl: 0 S.F.
Slab: 0 S.F.
Height to Joists: 0.0

(8) Basement

	Conc. Block
	Poured Conc.
	Stone
	Treated Wood
	Concrete Floor

(9) Basement Finish

	Recreation	SF
	Living	SF
1	Walkout Doors (B)	
	No Floor	SF
	Walkout Doors (A)	

(10) Floor Support

Joists:
Unsupported Len:
Cntr.Sup:

(11) Heating/Cooling

X	Gas		Oil		Elec.
	Wood		Coal		Steam

	Forced Air w/o Ducts
X	Forced Air w/ Ducts
	Forced Hot Water
	Electric Baseboard
	Elec. Ceil. Radiant
	Radiant (in-floor)
	Electric Wall Heat
	Space Heater
	Wall/Floor Furnace
	Forced Heat & Cool
	Heat Pump
	No Heating/Cooling

	Central Air
	Wood Furnace

(12) Electric

150	Amps Service

No./Qual. of Fixtures

	Ex.	X	Ord.		Min

No. of Elec. Outlets

	Many	X	Ave.		Few

(13) Plumbing

	Average Fixture(s)
1	3 Fixture Bath
	2 Fixture Bath
	Softener, Auto
	Softener, Manual
	Solar Water Heat
	No Plumbing
	Extra Toilet
	Extra Sink
	Separate Shower
	Ceramic Tile Floor
	Ceramic Tile Wains
	Ceramic Tub Alcove
	Vent Fan

(14) Water/Sewer

	Public Water
	Public Sewer
1	Water Well
1	1000 Gal Septic
	2000 Gal Septic

Lump Sum Items:

(15) Built-ins

	Appliance Allow.
	Cook Top
	Dishwasher
	Garbage Disposal
	Bath Heater
	Vent Fan
	Hot Tub
	Unvented Hood
	Vented Hood
	Intercom
	Jacuzzi Tub
	Jacuzzi repl.Tub
	Oven
	Microwave
	Standard Range
	Self Clean Range
	Sauna
	Trash Compactor
	Central Vacuum
	Security System

(15) Fireplaces

	Interior 1 Story
	Interior 2 Story
	2nd/Same Stack
	Two Sided
	Exterior 1 Story
	Exterior 2 Story
	Prefab 1 Story
	Prefab 2 Story
	Heat Circulator
	Raised Hearth
	Wood Stove
	Direct-Vented Gas

Class: C
Effec. Age: 10
Floor Area: 864
Total Base New : 157,439 E.C.F.
Total Depr Cost: 141,695 X 1.297
Estimated T.C.V: 183,778

(16) Porches/Decks

Area	Type
192	WCP (1 Story)
102	4in Concrete

(17) Garage

Year Built:
Car Capacity:
Class:
Exterior:
Brick Ven.:
Stone Ven.:
Common Wall:
Foundation:
Finished ?:
Auto. Doors:
Mech. Doors:
Area:
% Good:
Storage Area:
No Conc. Floor:

Bsmnt Garage:

Carport Area:
Roof:

Cost Est. for Res. Bldg: 1 Single Family PLAIN Cls C Blt 2015
(11) Heating System: Forced Air w/ Ducts
Ground Area = 864 SF Floor Area = 864 SF.
Phy/Ab.Phy/Func/Econ/Comb. % Good=90/100/100/100/90
Building Areas

Stories	Exterior	Foundation	Size	Cost New	Depr. Cost
1 Story	Siding	Basement	864		
			Total:	135,399	121,859
Other Additions/Adjustments					
Basement, Outside Entrance, Below Grade			1	2,578	2,320
Water/Sewer					
1000 Gal Septic			1	4,899	4,409
Water Well, 100 Feet			1	5,849	5,264
Porches					
WCP (1 Story)			192	7,874	7,087
4in Concrete			102	840	756
			Totals:	157,439	141,695

Notes:

ECF (RESIDENTIAL) 1.297 => TCV: 183,778

*** Information herein deemed reliable but not guaranteed***

WALKOUT BSMT

CCP UNDER WCP 102 SF

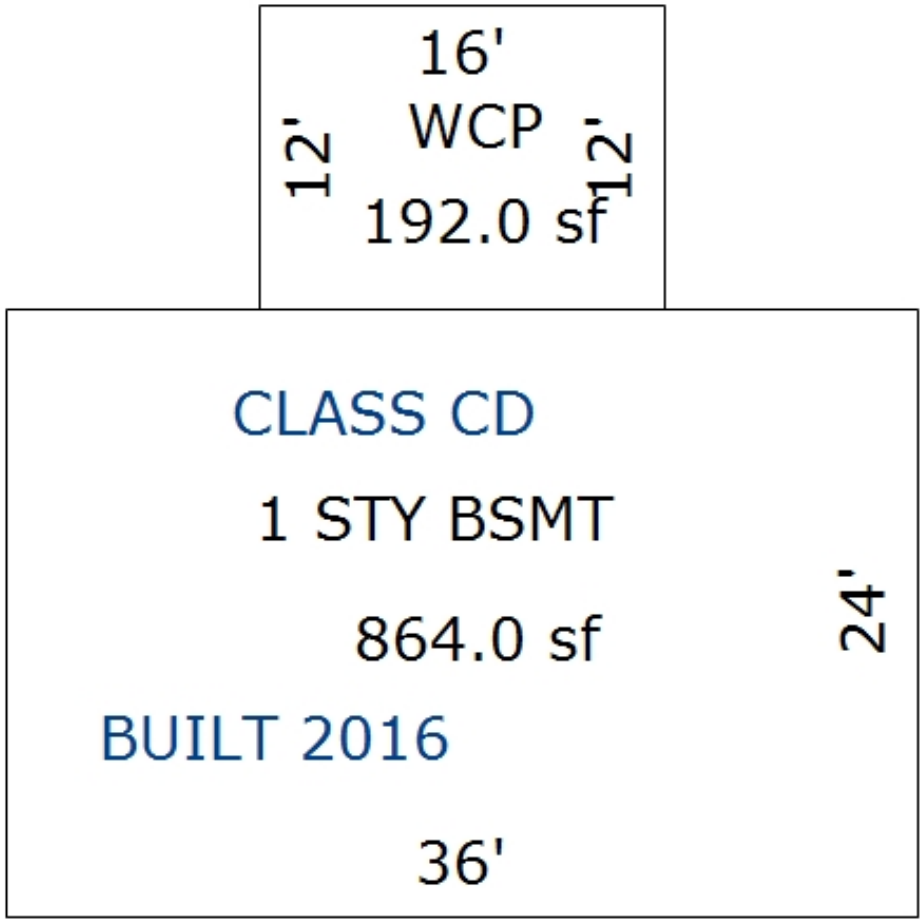

*** Information herein deemed reliable but not guaranteed***

Parcel Number: 2410-36-2402 Jurisdiction: GREENWOOD TWP County: WEXFORD Printed on 02/15/2024

Grantor	Grantee	Sale Price	Sale Date	Inst. Type	Terms of Sale	Liber & Page	Verified By	Prcnt. Trans.
FLEMING, DANNY & JUDITH	DECKER, EUGENE & MARIE B	85,000	09/29/2000	WD	03-ARM'S LENGTH	376:494	DEED	0.0

Property Address	Class: RESIDENTIAL-IMPROV	Zoning:	Building Permit(s)	Date	Number	Status
5301 E 12 1/2 RD	School: MANTON CONSOLIDATED SCHOOLS					
	P.R.E. 100% / /					
Owner's Name/Address	:					
DECKER, EUGENE & MARIE B 5301 E 12 1/2 RD MANTON MI 49663	2024 Est TCV 196,504 TCV/TFA: 188.95					

X Improved | Vacant

Land Value Estimates for Land Table 4010.LAND VALUES

Description	Frontage	Depth	* Factors * Front	Depth	Rate	%Adj.	Reason	Value
ACREAGE			14.630 Acres		3,273	100		47,878
ROW			0.370 Acres		0	100		0
			15.00 Total Acres		Total Est. Land Value =			47,878

Public Improvements

	Dirt Road
X	Gravel Road
	Paved Road
	Storm Sewer
	Sidewalk
	Water
	Sewer
X	Electric
	Gas
	Curb
	Street Lights
	Standard Utilities
	Underground Utils.

Land Improvement Cost Estimates

Description	Rate	Size	% Good	Cash Value
D/W/P: 4in Concrete	6.53	286	45	841
D/W/P: 4in Concrete	6.53	204	45	599
D/W/P: 4in Concrete	6.53	48	45	141
D/W/P: 4in Concrete	6.53	160	45	470
Total Estimated Land Improvements True Cash Value =				2,051

Topography of Site

	Level
X	Rolling
X	Low
X	High
	Landscaped
	Swamp
	Wooded
	Pond
	Waterfront
	Ravine
	Wetland
	Flood Plain
X	OPEN/PINES

Tax Description

W 3/8 OF SE 1/4 OF NW 1/4 15 A. GW. SEC. 36 T24N R10W -MANTON-

Comments/Influences

Who	When	What
GLA	05/11/2020	INSPECTION
GLA	07/10/2019	INSPECTION
GLA	07/10/2019	INSPECTION

Year	Land Value	Building Value	Assessed Value	Board of Review	Tribunal/ Other	Taxable Value
2024	23,900	74,400	98,300			54,952C
2023	19,000	61,200	80,200			52,336C
2022	16,900	52,100	69,000			49,844C
2021	17,600	53,000	70,600			48,252C

The Equalizer. Copyright (c) 1999 - 2009.
Licensed To: Township of Greenwood, County of Wexford, Michigan

*** Information herein deemed reliable but not guaranteed***

Building Type

X	Single Family
	Mobile Home
	Town Home
	Duplex
	A-Frame
X	Wood Frame

Building Style: PLAIN

Yr Built	Remodeled
0	0

Condition: Good

Room List

	Basement
	1st Floor
	2nd Floor
	Bedrooms

(1) Exterior

	Wood/Shingle
X	Aluminum/Vinyl
	Brick
X	Insulation

(2) Windows

X	Many Avg. Few	X	Large Avg. Small

	Wood Sash
	Metal Sash
X	Vinyl Sash
	Double Hung
	Horiz. Slide
	Casement
	Double Glass
	Patio Doors
X	Storms & Screens

(3) Roof

X	Gable Hip Flat		Gambrel Mansard Shed
X	Asphalt Shingle		

Chimney:

(3) Roof (cont.)

	Eavestrough
X	Insulation
0	Front Overhang
0	Other Overhang

(4) Interior

X	Drywall Paneled		Plaster Wood T&G

Trim & Decoration

	Ex	X	Ord		Min

Size of Closets

	Lg	X	Ord		Small

Doors: Solid X H.C.

(5) Floors

Kitchen:
Other: Linoleum
Other: Carpeted

(6) Ceilings

X	Drywall		

(7) Excavation

Basement: 1040 S.F.
Crawl: 0 S.F.
Slab: 0 S.F.
Height to Joists: 0.0

(8) Basement

	Conc. Block
	Poured Conc.
	Stone
	Treated Wood
	Concrete Floor

(9) Basement Finish

	Recreation SF
	Living SF
	Walkout Doors (B)
	No Floor SF
	Walkout Doors (A)

(10) Floor Support

Joists:
Unsupported Len:
Cntr.Sup:

(11) Heating/Cooling

X	Gas Wood		Oil Coal		Elec. Steam

	Forced Air w/o Ducts
X	Forced Air w/ Ducts
	Forced Hot Water
	Electric Baseboard
	Elec. Ceil. Radiant
	Radiant (in-floor)
	Electric Wall Heat
	Space Heater
	Wall/Floor Furnace
	Forced Heat & Cool
	Heat Pump
	No Heating/Cooling

	Central Air
	Wood Furnace

(12) Electric

150 Amps Service

No./Qual. of Fixtures

	Ex.	X	Ord.		Min

No. of Elec. Outlets

	Many	X	Ave.		Few

(13) Plumbing

1	Average Fixture(s)
	3 Fixture Bath
	2 Fixture Bath
	Softener, Auto
	Softener, Manual
	Solar Water Heat
	No Plumbing
	Extra Toilet
	Extra Sink
	Separate Shower
	Ceramic Tile Floor
	Ceramic Tile Wains
	Ceramic Tub Alcove
	Vent Fan

(14) Water/Sewer

	Public Water
	Public Sewer
1	Water Well
1	1000 Gal Septic
	2000 Gal Septic

Lump Sum Items:

(15) Built-ins

	Appliance Allow.
	Cook Top
	Dishwasher
	Garbage Disposal
	Bath Heater
	Vent Fan
	Hot Tub
	Unvented Hood
	Vented Hood
	Intercom
	Jacuzzi Tub
	Jacuzzi repl.Tub
	Oven
	Microwave
	Standard Range
	Self Clean Range
	Sauna
	Trash Compactor
	Central Vacuum
	Security System

(15) Fireplaces

	Interior 1 Story
	Interior 2 Story
	2nd/Same Stack
	Two Sided
	Exterior 1 Story
	Exterior 2 Story
	Prefab 1 Story
	Prefab 2 Story
	Heat Circulator
	Raised Hearth
	Wood Stove
	Direct-Vented Gas

Class: CD
Effec. Age: 49
Floor Area: 1,040
Total Base New : 231,747 E.C.F.
Total Depr Cost: 113,011 X 1.297
Estimated T.C.V: 146,575

(16) Porches/Decks

Area	Type
512	WGEP (1 Story)

(17) Garage

Year Built:
Car Capacity:
Class: CD
Exterior: Siding
Brick Ven.: 0
Stone Ven.: 0
Common Wall: 1 Wall
Foundation: 42 Inch
Finished ?:
Auto. Doors: 0
Mech. Doors: 0
Area: 576
% Good: 0
Storage Area: 0
No Conc. Floor: 0

Bsmnt Garage:

Carport Area:
Roof:

Cost Est. for Res. Bldg: 1 Single Family PLAIN Cls CD Blt 0
(11) Heating System: Forced Air w/ Ducts
Ground Area = 1040 SF Floor Area = 1040 SF.
Phy/Ab.Phy/Func/Econ/Comb. % Good=51/100/100/100/51
Building Areas

Stories	Exterior	Foundation	Size	Cost New	Depr. Cost	
1 Story	Siding	Basement	1,040			
			Total:	140,490	71,649	
Other Additions/Adjustments						
Water/Sewer						
1000 Gal Septic			1	4,582	2,337	
Water Well, 100 Feet			1	5,680	2,897	
Porches						
WGEP (1 Story)			512	30,684	15,649	
Garages						
Class: CD Exterior: Siding Foundation: 42 Inch (Unfinished)						
Base Cost			576	22,401	11,425	
Common Wall: 1 Wall			1	-2,529	-1,290	
Class: D Exterior: Pole (Unfinished)						
Base Cost			960	19,334	9,860	
No Concrete Floor			960	-5,386	-2,747	
Class: D Exterior: Pole (Unfinished)						
Base Cost			976	19,598	3,136	*1
No Concrete Floor			976	-5,475	-876	
Local Cost Items						
POLE LEANTO DIRT			640	2,368	971	*4
			Totals:	231,747	113,011	

Notes:
ECF (RESIDENTIAL) 1.297 => TCV: 146,575

*** Information herein deemed reliable but not guaranteed***

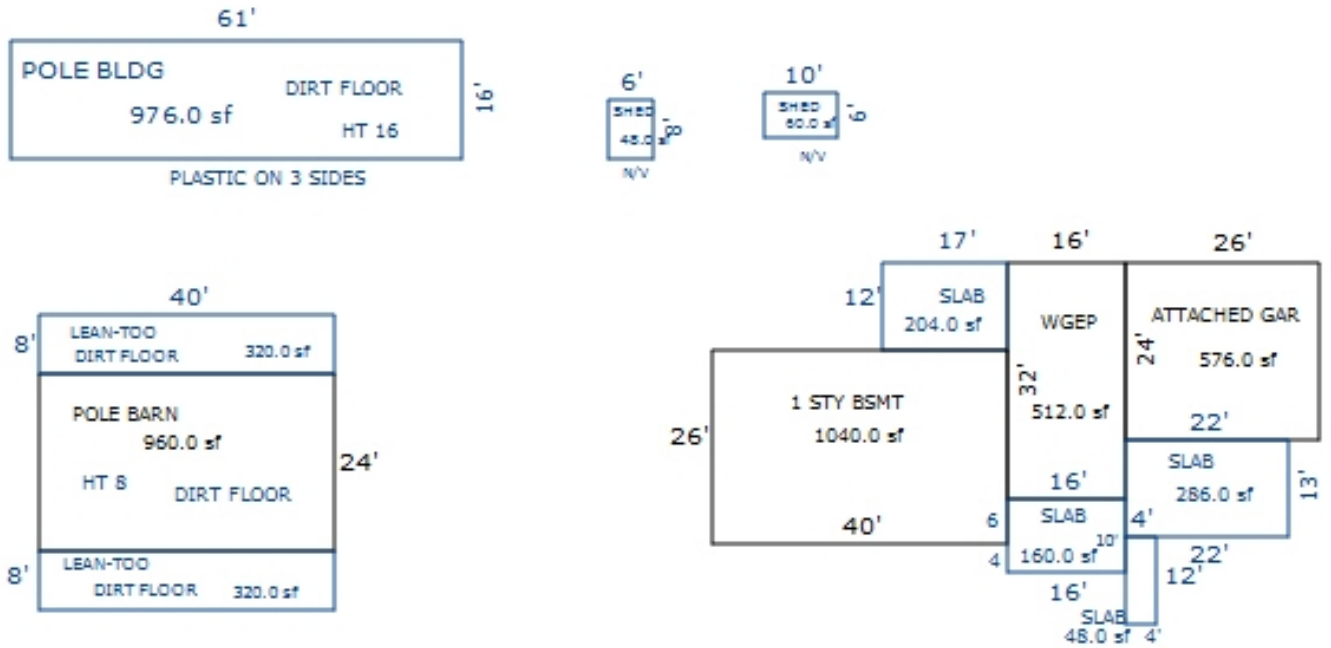

Sketch by Apex Sketch

*** Information herein deemed reliable but not guaranteed***

Parcel Number: 2410-36-3101 Jurisdiction: GREENWOOD TWP County: WEXFORD Printed on 02/15/2024

Grantor	Grantee	Sale Price	Sale Date	Inst. Type	Terms of Sale	Liber & Page	Verified By	Prcnt. Trans.
ADAMS, JOHN Q.	ADAMS, PATRICIA M LE	100	05/21/2021	QC	18-LIFE ESTATE	690-1097	AGENT	0.0

Property Address

5490 E 12 1/2 RD

Owner's Name/Address

ADAMS, PATRICIA M LE
5490 E 12 1/2 RD
MANTON MI 49663

Tax Description

E 1/4 OF E 1/2 OF NE 1/4 OF SW 1/4 5 A.
GW. SEC. 36 T24N R10W -MANTON-

Comments/Influences

The Equalizer. Copyright (c) 1999 - 2009.
Licensed To: Township of Greenwood, County of Wexford, Michigan

Class: RESIDENTIAL-IMPROV Zoning:
School: MANTON CONSOLIDATED SCHOOLS
P.R.E. 100% / /
:
2024 Est TCV 95,324 TCV/TFA: 67.70

Building Permit(s)	Date	Number	Status
RESIDENTIAL - REMODEL	05/01/2001	PB10221	

X Improved | Vacant

	Public Improvements
	Dirt Road
X	Gravel Road
	Paved Road
	Storm Sewer
	Sidewalk
	Water
	Sewer
X	Electric
	Gas
	Curb
	Street Lights
	Standard Utilities
	Underground Utils.

	Topography of Site
	Level
X	Rolling
	Low
X	High
	Landscaped
X	Swamp
X	Wooded
	Pond
	Waterfront
	Ravine
	Wetland
	Flood Plain
X	OPEN

Who	When	What
GLA	05/11/2020	INSPECTION
GLA	07/10/2019	INSPECTION
GLA	07/10/2019	INSPECTION

Land Value Estimates for Land Table 4010.LAND VALUES

Description	Frontage	Depth	* Factors * Front	Depth	Rate	%Adj.	Reason	Value
ACREAGE			4.870 Acres		5,103	100		24,853
ROW			0.130 Acres		0	100		0
			5.00 Total Acres		Total Est. Land Value =			24,853

Land Improvement Cost Estimates

Description	Rate	Size	% Good	Cash Value
D/W/P: 4in Concrete	7.01	20	45	63
Wood Frame	23.01	374	42	3,615
Total Estimated Land Improvements True Cash Value =				3,678

Year	Land Value	Building Value	Assessed Value	Board of Review	Tribunal/ Other	Taxable Value
2024	12,400	35,300	47,700			23,399C
2023	10,600	28,700	39,300			22,285C
2022	7,400	24,200	31,600		31,600A	21,224C
2021	8,500	20,600	29,100			20,546C

*** Information herein deemed reliable but not guaranteed***

Building Type

	Single Family
X	Mobile Home
	Town Home
	Duplex
	A-Frame

X	Wood Frame

Building Style: SWT/DWT

Yr Built	Remodeled
0	0

Condition: Poor

Room List

	Basement
	1st Floor
	2nd Floor
	Bedrooms

(1) Exterior

	Wood/Shingle
X	Aluminum/Vinyl
	Brick
X	Insulation

(2) Windows

	Many		Large
X	Avg.	X	Avg.
	Few		Small

	Wood Sash
	Metal Sash
X	Vinyl Sash
	Double Hung
	Horiz. Slide
	Casement
	Double Glass
	Patio Doors
X	Storms & Screens

(3) Roof

X	Gable		Gambrel
	Hip		Mansard
	Flat		Shed

X	Asphalt Shingle

Chimney:

(3) Roof (cont.)

	Eavestrough
X	Insulation
0	Front Overhang
0	Other Overhang

(4) Interior

X	Drywall		Plaster
	Paneled		Wood T&G

Trim & Decoration

	Ex	X	Ord		Min

Size of Closets

	Lg	X	Ord		Small

Doors:		Solid	X	H.C.	

(5) Floors

Kitchen:
Other: Linoleum
Other: Carpeted

(6) Ceilings

X	Drywall		

(7) Excavation

Basement: 0 S.F.
Crawl: 540 S.F.
Slab: 0 S.F.
Height to Joists: 0.0

(8) Basement

	Conc. Block
	Poured Conc.
	Stone
	Treated Wood
	Concrete Floor

(9) Basement Finish

	Recreation SF
	Living SF
	Walkout Doors (B)
	No Floor SF
	Walkout Doors (A)

(10) Floor Support

Joists:
Unsupported Len:
Cntr.Sup:

(11) Heating/Cooling

X	Gas		Oil		Elec.
	Wood		Coal		Steam

X	Forced Warm Air
	Wall Furnace
	Warm & Cool Air
	Heat Pump

	Central Air
	Wood Furnace

(12) Electric

150	Amps Service

No./Qual. of Fixtures

	Ex.	X	Ord.		Min

No. of Elec. Outlets

	Many	X	Ave.		Few

(13) Plumbing

	Average Fixture(s)
1	3 Fixture Bath
	2 Fixture Bath
	Softener, Auto
	Softener, Manual
	Solar Water Heat
	No Plumbing
	Extra Toilet
	Extra Sink
	Separate Shower
	Ceramic Tile Floor
	Ceramic Tile Wains
	Ceramic Tub Alcove
	Vent Fan

(14) Water/Sewer

	Public Water
	Public Sewer
1	Water Well
1	1000 Gal Septic
	2000 Gal Septic

Lump Sum Items:

(15) Built-ins

	Appliance Allow.
	Cook Top
	Dishwasher
	Garbage Disposal
	Bath Heater
	Vent Fan
	Hot Tub
	Unvented Hood
	Vented Hood
	Intercom
	Jacuzzi Tub
	Jacuzzi repl.Tub
	Oven
	Microwave
	Standard Range
	Self Clean Range
	Sauna
	Trash Compactor
	Central Vacuum
	Security System

(15) Fireplaces

	Interior 1 Story
	Interior 2 Story
	2nd/Same Stack
	Two Sided
	Exterior 1 Story
	Exterior 2 Story
	Prefab 1 Story
	Prefab 2 Story
	Heat Circulator
	Raised Hearth
	Wood Stove
	Direct-Vented Gas

Class: Fair
Effec. Age: 25
Floor Area:
Total Base New : 147,137 E.C.F.
Total Depr Cost: 51,498 X 1.297
Estimated T.C.V: 66,793

(16) Porches/Decks

Area	Type
80	WPP
34	4in Concrete
210	WGEP (1 Story)
390	WCP (1 Story)

(17) Garage

Year Built:
Car Capacity:
Class: CD
Exterior: Siding
Brick Ven.: 0
Stone Ven.: 0
Common Wall: Detache
Foundation: 42 Inch
Finished ?:
Auto. Doors: 0
Mech. Doors: 0
Area: 720
% Good: 0
Storage Area: 0
No Conc. Floor: 720

Bsmnt Garage:

Carport Area:
Roof:

Cost Est. for Res. Bldg: 1 Mobile Home SWT/DWT Cls Fair Blt 0
(11) Heating System: Forced Warm Air
Ground Area = 1408 SF Floor Area = 1408 SF.
Phy/Ab.Phy/Func/Econ/Comb. % Good=35/100/100/100/35
Building Areas

Type	Ext. Walls	Roof/Fnd.	Size	Cost New	Depr. Cost
Main Home	Ribbed	Metal	868		
Addition	Siding	Crawl	540		
			Total:	81,611	28,565
Other Additions/Adjustments					
Skirting, Metal or Vinyl, Vertical			92	1,026	359
Water/Sewer					
1000 Gal Septic			1	4,582	1,604
Water Well, 100 Feet			1	5,680	1,988
Porches					
WPP			80	2,449	857
WGEP (1 Story)			210	10,945	3,831
WCP (1 Story)			390	12,492	4,372
4in Concrete			34	252	88
Garages					
Class: CD Exterior: Siding Foundation: 42 Inch (Unfinished)					
Base Cost			720	26,244	9,185
No Concrete Floor			720	-4,428	-1,550
Local Cost Items					
FREE STANDING ROOF			868	6,284	2,199
			Totals:	147,137	51,498

Notes: 1973 SCHULT #124661 AFF OF AFFIXTURE..

ECF (RESIDENTIAL) 1.297 => TCV: 66,793

*** Information herein deemed reliable but not guaranteed***

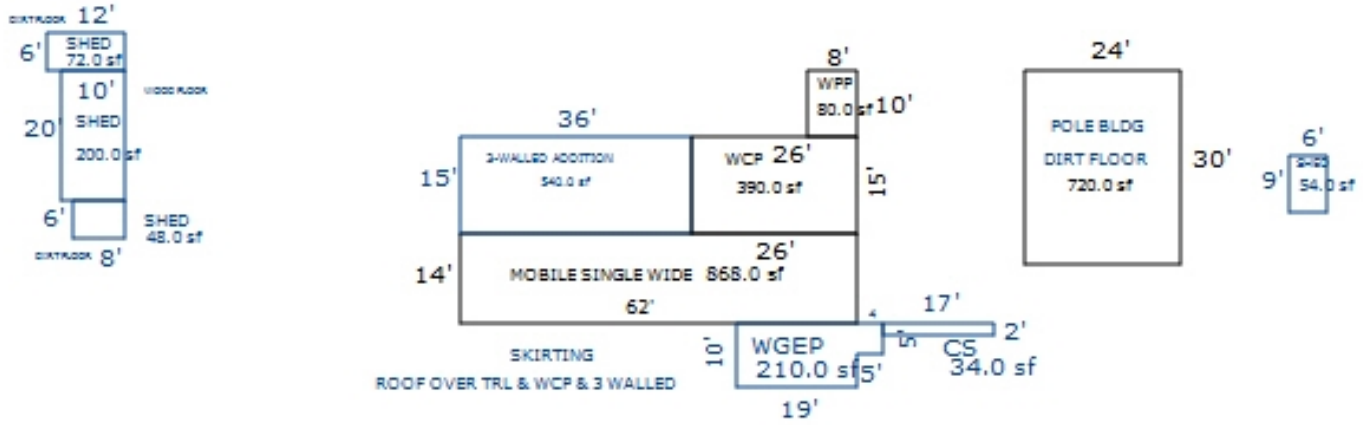

Sketch by Apex Sketch

*** Information herein deemed reliable but not guaranteed***

Parcel Number: 2410-36-3102 Jurisdiction: GREENWOOD TWP County: WEXFORD Printed on 02/15/2024

Grantor	Grantee	Sale Price	Sale Date	Inst. Type	Terms of Sale	Liber & Page	Verified By	Prcnt. Trans.
JOHN. SCOTT CLAYTON	JOHN, SCOTT C & SARAH A HA	0	12/27/2022	QC	21-NOT USED/OTHER	694/1448	DEED	0.0
HUNDLEY, VICTORIA LYNN	JOHN. SCOTT CLAYTON	0	09/13/2019	QC	21-NOT USED/OTHER	685/2335	DEED	100.0
BESEY, STEVEN T	HUNDLY, VICTORIA LYNN	6,000	06/21/2018	QC	03-ARM'S LENGTH	682 /2961	DEED	100.0
JOHN, SCOTT C & ELIZABETH	GLENN, JOHN R TRUST	0	10/28/2006	QC	21-NOT USED/OTHER	594/362	DEED	0.0

Property Address

5312 E 12 1/2 RD

Owner's Name/Address

JOHN, SCOTT C & SARAH A HARRISON
5312 E 12 1/2 RD
MANTON MI 49663

Tax Description

SW 1/4 OF NE 1/4 OF SW 1/4 10 A. GW. SEC. 36 T24N R10W -MANTON-

Comments/Influences

CHANGED ADDRESS 06-13-17
C/O SCOTT JOHN
5312 E 12 1/2 RD
MANTON MI 49663
PER COUNTY EQ

The Equalizer. Copyright (c) 1999 - 2009.
Licensed To: Township of Greenwood, County of Wexford, Michigan

Class: RESIDENTIAL-IMPROV Zoning:
School: MANTON CONSOLIDATED SCHOOLS
P.R.E. 100% 02/08/2021
:
2024 Est TCV 92,368 TCV/TFA: 104.25

Building Permit(s)	Date	Number	Status
MOBILE HOME	09/01/1999	PE12375	

X	Improved		Vacant

	Public Improvements
	Dirt Road
X	Gravel Road
	Paved Road
	Storm Sewer
	Sidewalk
	Water
	Sewer
X	Electric
	Gas
	Curb
	Street Lights
	Standard Utilities
	Underground Utils.

	Topography of Site
	Level
X	Rolling
	Low
	High
	Landscaped
	Swamp
	Wooded
	Pond
	Waterfront
	Ravine
	Wetland
	Flood Plain
X	OPEN

Who	When	What
GLA	05/11/2020	INSPECTION
GLA	07/10/2019	INSPECTION
GLA	07/10/2019	INSPECTION

Land Value Estimates for Land Table 4010.LAND VALUES

Description	Frontage	Depth	* Factors * Front	Depth	Rate	%Adj.	Reason	Value
ACREAGE			15.000 Acres		3,200	100		48,000
			15.00 Total Acres		Total Est. Land Value =			48,000

Land Improvement Cost Estimates

Description	Rate	Size	% Good	Cash Value
Wood Frame	19.52	220	41	1,761
Total Estimated Land Improvements True Cash Value =				1,761

Year	Land Value	Building Value	Assessed Value	Board of Review	Tribunal/ Other	Taxable Value
2024	24,000	22,200	46,200			30,832C
2023	19,500	18,100	37,600			29,364C
2022	17,300	15,200	32,500			27,966C
2021	18,000	13,200	31,200			27,073C

*** Information herein deemed reliable but not guaranteed***

Building Type

	Single Family
X	Mobile Home
	Town Home
	Duplex
	A-Frame

X	Wood Frame

Building Style: SWT/DWT

Yr Built	Remodeled
0	0

Condition: Good

Room List

	Basement
	1st Floor
	2nd Floor
	Bedrooms

(1) Exterior

	Wood/Shingle
X	Aluminum/Vinyl
	Brick
X	Insulation

(2) Windows

	Many		Large
X	Avg.	X	Avg.
	Few		Small

	Wood Sash
	Metal Sash
X	Vinyl Sash
	Double Hung
	Horiz. Slide
	Casement
	Double Glass
	Patio Doors
X	Storms & Screens

(3) Roof

X	Gable		Gambrel
	Hip		Mansard
	Flat		Shed

X	Asphalt Shingle

Chimney:

(3) Roof (cont.)

	Eavestrough
X	Insulation
0	Front Overhang
0	Other Overhang

(4) Interior

X	Drywall		Plaster
	Paneled		Wood T&G

Trim & Decoration

	Ex	X	Ord		Min

Size of Closets

	Lg	X	Ord		Small

Doors:		Solid	X	H.C.	

(5) Floors

Kitchen:
Other: Linoleum
Other: Carpeted

(6) Ceilings

X	Drywall		

(7) Excavation

Basement: 0 S.F.
Crawl: 416 S.F.
Slab: 0 S.F.
Height to Joists: 0.0

(8) Basement

	Conc. Block
	Poured Conc.
	Stone
	Treated Wood
	Concrete Floor

(9) Basement Finish

	Recreation SF
	Living SF
	Walkout Doors (B)
	No Floor SF
	Walkout Doors (A)

(10) Floor Support

Joists:
Unsupported Len:
Cntr.Sup:

(11) Heating/Cooling

X	Gas		Oil		Elec.
	Wood		Coal		Steam

X	Forced Warm Air
	Wall Furnace
	Warm & Cool Air
	Heat Pump

	Central Air
	Wood Furnace

(12) Electric

150	Amps Service

No./Qual. of Fixtures

	Ex.	X	Ord.		Min

No. of Elec. Outlets

	Many	X	Ave.		Few

(13) Plumbing

	Average Fixture(s)
1	3 Fixture Bath
	2 Fixture Bath
	Softener, Auto
	Softener, Manual
	Solar Water Heat
	No Plumbing
	Extra Toilet
	Extra Sink
	Separate Shower
	Ceramic Tile Floor
	Ceramic Tile Wains
	Ceramic Tub Alcove
	Vent Fan

(14) Water/Sewer

	Public Water
	Public Sewer
1	Water Well
1	1000 Gal Septic
	2000 Gal Septic

Lump Sum Items:

(15) Built-ins

	Appliance Allow.
	Cook Top
	Dishwasher
	Garbage Disposal
	Bath Heater
	Vent Fan
	Hot Tub
	Unvented Hood
	Vented Hood
	Intercom
	Jacuzzi Tub
	Jacuzzi repl.Tub
	Oven
	Microwave
	Standard Range
	Self Clean Range
	Sauna
	Trash Compactor
	Central Vacuum
	Security System

(15) Fireplaces

	Interior 1 Story
	Interior 2 Story
	2nd/Same Stack
	Two Sided
	Exterior 1 Story
	Exterior 2 Story
	Prefab 1 Story
	Prefab 2 Story
	Heat Circulator
	Raised Hearth
	Wood Stove
	Direct-Vented Gas

Class: Low
Effec. Age: 25
Floor Area:
Total Base New : 93,763 E.C.F.
Total Depr Cost: 32,851 X 1.297
Estimated T.C.V: 42,607

(16) Porches/Decks

Area	Type
120	WGEP (1 Story)
120	Treated Wood

(17) Garage

Year Built:
Car Capacity:
Class: D
Exterior: Siding
Brick Ven.: 0
Stone Ven.: 0
Common Wall: Detache
Foundation: 42 Inch
Finished ?:
Auto. Doors: 0
Mech. Doors: 0
Area: 320
% Good: 0
Storage Area: 0
No Conc. Floor: 320

Bsmnt Garage:

Carport Area:
Roof:

Cost Est. for Res. Bldg: 1 Mobile Home SWT/DWT Cls Low Blt 0
(11) Heating System: Wall Furnace
Ground Area = 886 SF Floor Area = 886 SF.
Phy/Ab.Phy/Func/Econ/Comb. % Good=35/100/100/100/35
Building Areas

Type	Ext. Walls	Roof/Fnd.	Size	Cost New	Depr. Cost	
Main Home	Ribbed	Metal	470			
Addition	Siding	Crawl	416			
			Total:	54,424	19,048	
Other Additions/Adjustments						
Skirting, Metal or Vinyl, Vertical			57	619	217	
Water/Sewer						
1000 Gal Septic			1	4,293	1,503	
Water Well, 100 Feet			1	5,545	1,941	
Porches						
WGEP (1 Story)			120	7,536	2,638	
Deck						
Treated Wood			120	2,836	993	
Garages						
Class: D Exterior: Siding Foundation: 42 Inch (Unfinished)						
Base Cost			320	13,357	4,675	
No Concrete Floor			320	-1,795	-628	
Local Cost Items						
POLE LEANTO DIRT			144	533	219	*4
FREE STANDING ROOF			886	6,415	2,245	
			Totals:	93,763	32,851	

Notes:

ECF (RESIDENTIAL) 1.297 => TCV: 42,607

*** Information herein deemed reliable but not guaranteed***

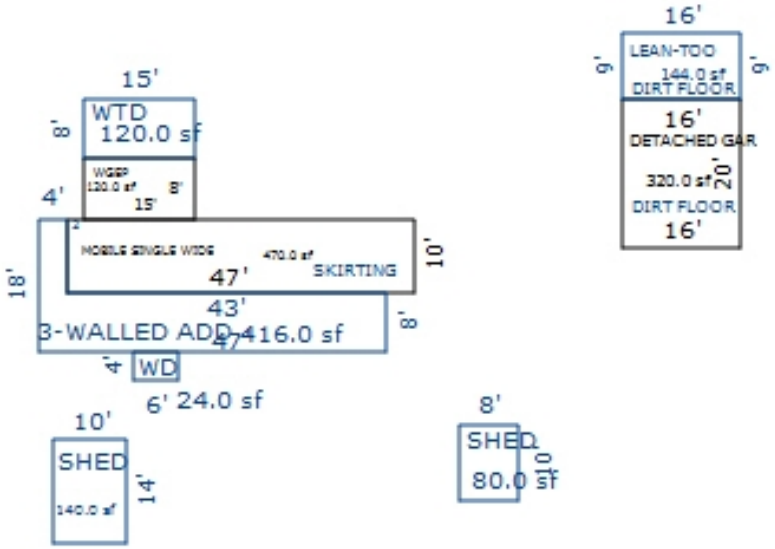

Sketch by Apex Sketch

*** Information herein deemed reliable but not guaranteed***

Parcel Number: 2410-36-3103 Jurisdiction: GREENWOOD TWP County: WEXFORD Printed on 02/15/2024

Grantor	Grantee	Sale Price	Sale Date	Inst. Type	Terms of Sale	Liber & Page	Verified By	Prcnt. Trans.
DIETZ, RANDY J.	OLSEN, DEREK	20,000	07/15/2022	WD	03-ARM'S LENGTH	693/1284	DEED	100.0

Property Address

5394 E 12 1/2 RD

Owner's Name/Address

OLSEN, DEREK
5394 E 12 1/2 RD
MANTON MI 49663

Tax Description

PAR COM 1933.10 FT E OF W 1/4 COR: E 164.88 FT; S 1320.37 FT; W 164.88 FT; N 1320 FT TO POB. --5 A.-- GW. SEC. 36 T24N R10W -MANTON-

Comments/Influences

The Equalizer. Copyright (c) 1999 - 2009. Licensed To: Township of Greenwood, County of Wexford, Michigan

Class: RESIDENTIAL-IMPROV Zoning:
School: MANTON CONSOLIDATED SCHOOLS
P.R.E. 100% 03/27/2023
:
2024 Est TCV 142,283 TCV/TFA: 117.01

Building Permit(s)	Date	Number	Status
Manufactured home	10/12/2022	PB22-0311	ENTERED

X	Improved		Vacant

	Public Improvements
	Dirt Road
X	Gravel Road
	Paved Road
	Storm Sewer
	Sidewalk
	Water
	Sewer
X	Electric
	Gas
	Curb
	Street Lights
	Standard Utilities
	Underground Utils.

	Topography of Site
	Level
X	Rolling
X	Low
	High
	Landscaped
	Swamp
	Wooded
	Pond
	Waterfront
	Ravine
	Wetland
	Flood Plain
X	OPEN

Who	When	What
JB	10/23/2023	INSPECTION
GLA	05/11/2020	INSPECTION
GLA	07/10/2019	INSPECTION

Land Value Estimates for Land Table 4010.LAND VALUES

Description	Frontage	Depth	* Factors * Front	Depth	Rate	%Adj.	Reason	Value
ACREAGE			4.880 Acres		5,104	100		24,907
ROW			0.120 Acres		0	100		0
			5.00 Total Acres		Total Est. Land Value =			24,907

Land Improvement Cost Estimates

Description	Rate	Size	% Good	Cash Value
Wood Frame	22.45	117	87	2,285
Total Estimated Land Improvements True Cash Value =				2,285

Year	Land Value	Building Value	Assessed Value	Board of Review	Tribunal/ Other	Taxable Value
2024	12,500	58,600	71,100			66,875C
2023	10,600	900	11,500			11,500S
2022	7,400	800	8,200			5,843C
2021	8,500	900	9,400			5,657C

*** Information herein deemed reliable but not guaranteed***

Building Type

	Single Family
X	Mobile Home
	Town Home
	Duplex
	A-Frame

X	Wood Frame

Building Style: SWT/DWT

Yr Built	Remodeled
2023	0

Condition: Average

Room List

	Basement
	1st Floor
	2nd Floor
	Bedrooms

(1) Exterior

	Wood/Shingle
X	Aluminum/Vinyl
	Brick
X	Insulation

(2) Windows

	Many		Large
X	Avg.	X	Avg.
	Few		Small

	Wood Sash
	Metal Sash
X	Vinyl Sash
	Double Hung
	Horiz. Slide
	Casement
X	Double Glass
	Patio Doors
	Storms & Screens

(3) Roof

X	Gable		Gambrel
	Hip		Mansard
	Flat		Shed

X	Asphalt Shingle

Chimney:

(3) Roof (cont.)

	Eavestrough
X	Insulation
0	Front Overhang
0	Other Overhang

(4) Interior

X	Drywall		Plaster
	Paneled		Wood T&G

Trim & Decoration

	Ex	X	Ord		Min

Size of Closets

	Lg	X	Ord		Small

Doors:		Solid	X	H.C.	

(5) Floors

Kitchen:
Other: Linoleum
Other: Carpeted

(6) Ceilings

X	Drywall		

(7) Excavation

Basement: 0 S.F.
Crawl: 0 S.F.
Slab: 0 S.F.
Height to Joists: 0.0

(8) Basement

	Conc. Block
	Poured Conc.
	Stone
	Treated Wood
	Concrete Floor

(9) Basement Finish

	Recreation SF
	Living SF
	Walkout Doors (B)
	No Floor SF
	Walkout Doors (A)

(10) Floor Support

Joists:
Unsupported Len:
Cntr.Sup:

(11) Heating/Cooling

X	Gas		Oil		Elec.
	Wood		Coal		Steam

X	Forced Warm Air
	Wall Furnace
	Warm & Cool Air
	Heat Pump
	Central Air
	Wood Furnace

(12) Electric

150	Amps Service

No./Qual. of Fixtures

	Ex.	X	Ord.		Min

No. of Elec. Outlets

	Many	X	Ave.		Few

(13) Plumbing

	Average Fixture(s)
2	3 Fixture Bath
	2 Fixture Bath
	Softener, Auto
	Softener, Manual
	Solar Water Heat
	No Plumbing
	Extra Toilet
	Extra Sink
	Separate Shower
	Ceramic Tile Floor
	Ceramic Tile Wains
	Ceramic Tub Alcove
	Vent Fan

(14) Water/Sewer

	Public Water
	Public Sewer
1	Water Well
1	1000 Gal Septic
	2000 Gal Septic

Lump Sum Items:

(15) Built-ins

	Appliance Allow.
	Cook Top
	Dishwasher
	Garbage Disposal
	Bath Heater
	Vent Fan
	Hot Tub
	Unvented Hood
	Vented Hood
	Intercom
	Jacuzzi Tub
	Jacuzzi repl.Tub
	Oven
	Microwave
	Standard Range
	Self Clean Range
	Sauna
	Trash Compactor
	Central Vacuum
	Security System

(15) Fireplaces

	Interior 1 Story
	Interior 2 Story
	2nd/Same Stack
	Two Sided
	Exterior 1 Story
	Exterior 2 Story
	Prefab 1 Story
	Prefab 2 Story
	Heat Circulator
	Raised Hearth
	Wood Stove
	Direct-Vented Gas

Class: Low
Effec. Age: 1
Floor Area:
Total Base New : 96,887 E.C.F.
Total Depr Cost: 88,737 X 1.297
Estimated T.C.V: 115,091

(16) Porches/Decks

Area	Type
80	Treated Wood
16	Treated Wood

(17) Garage

Year Built: 2022
Car Capacity:
Class: D
Exterior: Pole
Brick Ven.: 0
Stone Ven.: 0
Common Wall: Detache
Foundation: 18 Inch
Finished ?:
Auto. Doors: 1
Mech. Doors: 0
Area: 576
% Good: 0
Storage Area: 0
No Conc. Floor: 0

Bsmnt Garage:

Carport Area:
Roof:

Cost Est. for Res. Bldg: 1 Mobile Home SWT/DWT Cls Low Blt 2023
(11) Heating System: Forced Warm Air
Ground Area = 1216 SF Floor Area = 1216 SF.
Phy/Ab.Phy/Func/Econ/Comb. % Good=96/100/100/100/96
Building Areas

Type	Ext. Walls	Roof/Fnd.	Size	Cost New	Depr. Cost	
Main Home	Lap	Comp.Shingle	1216			
			Total:	57,160	54,874	
Other Additions/Adjustments						
Skirting, Metal or Vinyl, Vertical			184	1,998	1,918	
Plumbing						
3 Fixture Bath			1	2,387	2,292	
Water/Sewer						
1000 Gal Septic			1	4,293	4,121	
Water Well, 100 Feet			1	5,545	5,323	
Deck						
Treated Wood			80	2,179	2,092	
Treated Wood			16	707	679	
Garages						
Class: D Exterior: Pole (Unfinished)						
Base Cost			576	12,891	12,375	
Door Opener			1	433	416	
Class: D Exterior: Pole (Unfinished)						
Base Cost			540	12,323	6,161	*5
No Concrete Floor			540	-3,029	-1,515	
			Totals:	96,887	88,737	

Notes:

ECF (RESIDENTIAL) 1.297 => TCV: 115,091

*** Information herein deemed reliable but not guaranteed***

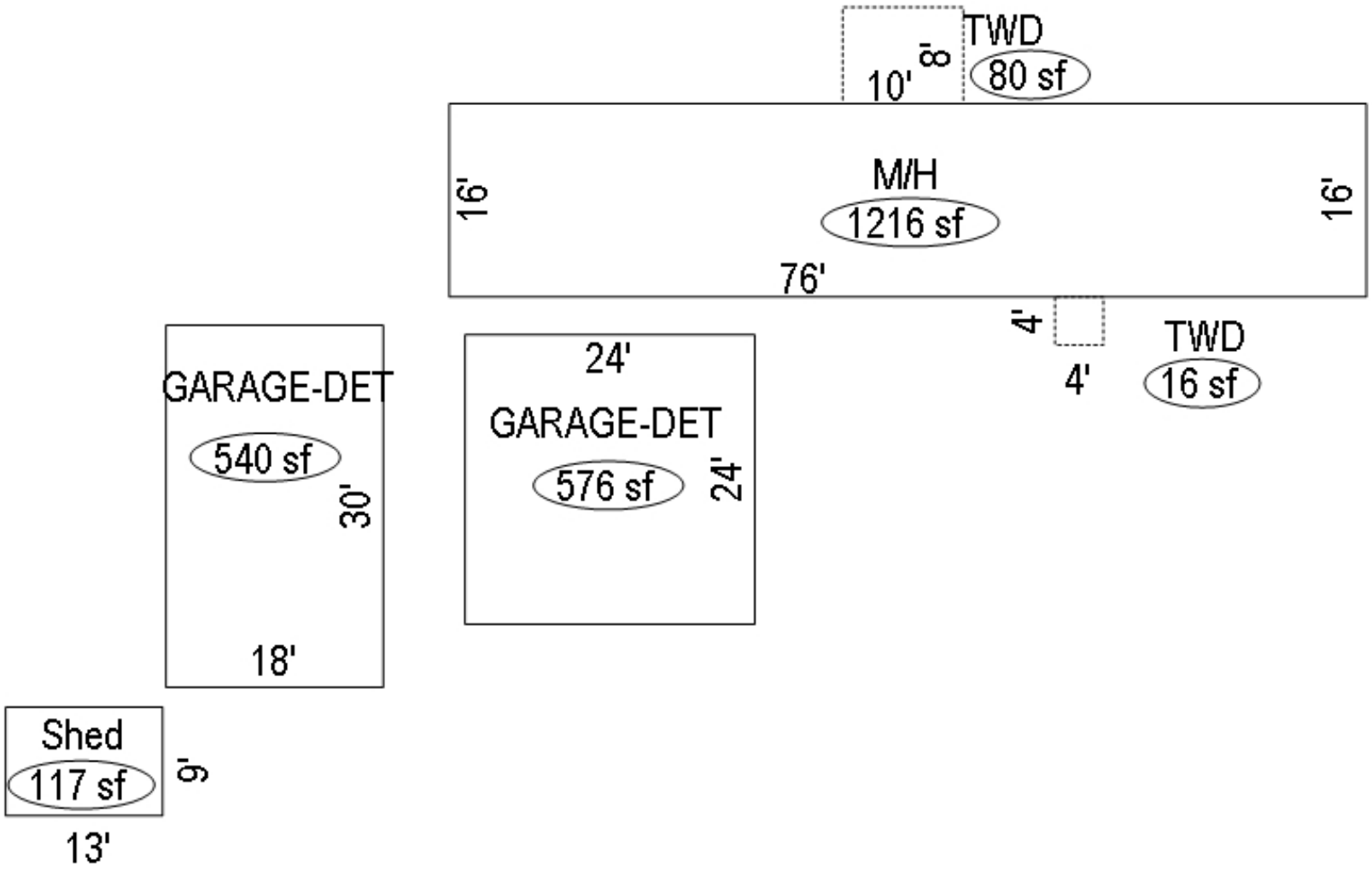

*** Information herein deemed reliable but not guaranteed***

Parcel Number: 2410-36-3104 Jurisdiction: GREENWOOD TWP County: WEXFORD Printed on 02/15/2024

Grantor	Grantee	Sale Price	Sale Date	Inst. Type	Terms of Sale	Liber & Page	Verified By	Prcnt. Trans.
ADAMS, ALFRED J.	SNYDER, JEFFERY W & JOANN	30,000	06/15/2022	WD	03-ARM'S LENGTH	693-1011	DEED	100.0

Property Address

Owner's Name/Address

SNYDER, JEFFERY W & JOANN L
112 MOYER AVE
ALMA MI 48801

Tax Description

E 1/2 OF NE 1/4 OF SW 1/4 EXC W 5 A. & EXC E 5 A. THEREOF --10 A.-- GW. SEC. 36 T24N R10W -MANTON-

Comments/Influences

The Equalizer. Copyright (c) 1999 - 2009. Licensed To: Township of Greenwood, County of Wexford, Michigan

Class: RESIDENTIAL-VACANT Zoning:

School: MANTON CONSOLIDATED SCHOOLS

P.R.E. 0%

:

2024 Est TCV 45,505

Building Permit(s)	Date	Number	Status

	Improved	X	Vacant

	Public Improvements
X	Dirt Road
X	Gravel Road
	Paved Road
	Storm Sewer
	Sidewalk
	Water
	Sewer
X	Electric
	Gas
	Curb
	Street Lights
	Standard Utilities
	Underground Utils.

	Topography of Site
	Level
X	Rolling
	Low
X	High
	Landscaped
	Swamp
	Wooded
	Pond
	Waterfront
	Ravine
	Wetland
	Flood Plain
X	OPEN

Who	When	What
GLA	05/11/2020	INSPECTION
GLA	07/10/2019	INSPECTION
GLA	07/10/2019	INSPECTION

Land Value Estimates for Land Table 4010.LAND VALUES

Description	Frontage	Depth	* Factors * Front	Depth	Rate	%Adj.	Reason	Value
ACREAGE			9.760 Acres		4,662	100		45,505
ROW			0.240 Acres		0	100		0
			10.00 Total Acres		Total Est. Land Value =			45,505

Year	Land Value	Building Value	Assessed Value	Board of Review	Tribunal/ Other	Taxable Value
2024	22,800	0	22,800			13,545C
2023	12,900	0	12,900			12,900S
2022	11,900	0	11,900			5,669C
2021	12,000	0	12,000			5,488C

*** Information herein deemed reliable but not guaranteed***

Parcel Number: 2410-36-3105 Jurisdiction: GREENWOOD TWP County: WEXFORD Printed on 02/15/2024

Grantor	Grantee	Sale Price	Sale Date	Inst. Type	Terms of Sale	Liber & Page	Verified By	Prcnt. Trans.
MORRIS, VERNA L ESTATE	AGEE, BRIAN J & PRISCILLA	28,500	04/30/2012	WD	08-ESTATE	647/2697	DEED	100.0
GLENN, JOHN R	MORRIS, VERNA L	7,900	12/29/2000	WD	08-ESTATE	378:284	DEED	0.0
GLENN, JOHN R. 11%	MORRIS, VERNA L.	7,900	08/15/1986	LC	03-ARM'S LENGTH	0	DEED	0.0

Property Address

5302 E 12 1/2 RD

Owner's Name/Address

AGEE, BRIAN J & PRISCILLA D
730 CRESCENT DR
DEARBORN MI 48124

Tax Description

W 1/2 OF N 1/2 OF W 1/2 OF NE 1/4 OF SW 1/4 --5 A.-- SUB TO EASMT L378 P931 '00 GW. SEC. 36 T24N R10W -MANTON-

Comments/Influences

The Equalizer. Copyright (c) 1999 - 2009. Licensed To: Township of Greenwood, County of Wexford, Michigan

Class: RESIDENTIAL-IMPROV Zoning:

School: MANTON CONSOLIDATED SCHOOLS

P.R.E. 0%

:

2024 Est TCV 95,166 TCV/TFA: 99.13

Building Permit(s)	Date	Number	Status
Pole Barn	07/09/2014	PB14-0158	COMPLETE
MOBILE HOME	10/23/2001	PM5429	
MOBILE HOME	09/27/2001	PE14010	
RESIDENTIAL - REMODEL	09/27/2001	PP2373	

X	Improved		Vacant

	Public Improvements
	Dirt Road
X	Gravel Road
	Paved Road
	Storm Sewer
	Sidewalk
	Water
	Sewer
X	Electric
	Gas
	Curb
	Street Lights
	Standard Utilities
	Underground Utils.

	Topography of Site
	Level
X	Rolling
	Low
	High
	Landscaped
X	Swamp
X	Wooded
	Pond
	Waterfront
	Ravine
	Wetland
	Flood Plain
X	OPEN

Who	When	What
GLA	05/11/2020	INSPECTION
GLA	07/10/2019	INSPECTION
GLA	07/10/2019	INSPECTION

Land Value Estimates for Land Table 4010.LAND VALUES

Description	Frontage	Depth	* Factors * Front	Depth	Rate	%Adj.	Reason	Value
ACREAGE			4.760 Acres		5,095	100		24,254
ROW			0.240 Acres		0	100		0
			5.00 Total Acres		Total Est. Land Value =			24,254

Year	Land Value	Building Value	Assessed Value	Board of Review	Tribunal/ Other	Taxable Value
2024	12,100	35,500	47,600			21,458C
2023	10,400	28,600	39,000			20,437C
2022	7,400	23,800	31,200			19,464C
2021	8,500	20,400	28,900			18,843C

*** Information herein deemed reliable but not guaranteed***

Building Type

	Single Family
X	Mobile Home
	Town Home
	Duplex
	A-Frame

X	Wood Frame

Building Style: SWT/DWT

Yr Built	Remodeled
0	0

Condition: Fair

Room List

	Basement
	1st Floor
	2nd Floor
	Bedrooms

(1) Exterior

	Wood/Shingle
	Aluminum/Vinyl
	Brick
X	Vinyl
	Insulation

(2) Windows

X	Many		Large
	Avg.	X	Avg.
	Few		Small

	Wood Sash
	Metal Sash
X	Vinyl Sash
X	Double Hung
	Horiz. Slide
	Casement
	Double Glass
	Patio Doors
X	Storms & Screens

(3) Roof

X	Gable		Gambrel
	Hip		Mansard
	Flat		Shed

X	Asphalt Shingle

Chimney:

(3) Roof (cont.)

	Eavestrough
	Insulation
0	Front Overhang
0	Other Overhang

(4) Interior

	Drywall		Plaster
	Paneled		Wood T&G

Trim & Decoration

	Ex	X	Ord		Min

Size of Closets

	Lg	X	Ord		Small

Doors:		Solid	X	H.C.	

(5) Floors

Kitchen:
Other:
Other:

(6) Ceilings

(7) Excavation

Basement: 0 S.F.
Crawl: 0 S.F.
Slab: 0 S.F.
Height to Joists: 0.0

(8) Basement

	Conc. Block
	Poured Conc.
	Stone
	Treated Wood
	Concrete Floor

(9) Basement Finish

	Recreation SF
	Living SF
	Walkout Doors (B)
	No Floor SF
	Walkout Doors (A)

(10) Floor Support

Joists:
Unsupported Len:
Cntr.Sup:

(11) Heating/Cooling

X	Gas		Oil		Elec.
	Wood		Coal		Steam

X	Forced Warm Air
	Wall Furnace
	Warm & Cool Air
	Heat Pump

	Central Air
	Wood Furnace

(12) Electric

0	Amps Service

No./Qual. of Fixtures

	Ex.	X	Ord.		Min

No. of Elec. Outlets

	Many	X	Ave.		Few

(13) Plumbing

	Average Fixture(s)
2	3 Fixture Bath
	2 Fixture Bath
	Softener, Auto
	Softener, Manual
	Solar Water Heat
	No Plumbing
	Extra Toilet
	Extra Sink
	Separate Shower
	Ceramic Tile Floor
	Ceramic Tile Wains
	Ceramic Tub Alcove
	Vent Fan

(14) Water/Sewer

	Public Water
	Public Sewer
1	Water Well
1	1000 Gal Septic
	2000 Gal Septic

Lump Sum Items:

(15) Built-ins

	Appliance Allow.
	Cook Top
	Dishwasher
	Garbage Disposal
	Bath Heater
	Vent Fan
	Hot Tub
	Unvented Hood
	Vented Hood
	Intercom
	Jacuzzi Tub
	Jacuzzi repl.Tub
	Oven
	Microwave
	Standard Range
	Self Clean Range
	Sauna
	Trash Compactor
	Central Vacuum
	Security System

(15) Fireplaces

	Interior 1 Story
	Interior 2 Story
	2nd/Same Stack
	Two Sided
	Exterior 1 Story
	Exterior 2 Story
	Prefab 1 Story
	Prefab 2 Story
	Heat Circulator
	Raised Hearth
	Wood Stove
	Direct-Vented Gas

Class: Fair
Effec. Age: 20
Floor Area:
Total Base New : 119,003 E.C.F.
Total Depr Cost: 54,674 X 1.297
Estimated T.C.V: 70,912

(16) Porches/Decks

Area	Type
9	WCP (1 Story)
124	4in Concrete
24	4in Concrete
96	Treated Wood
96	Treated Wood

(17) Garage

Year Built: 2015
Car Capacity:
Class: CD
Exterior: Pole
Brick Ven.: 0
Stone Ven.: 0
Common Wall: Detache
Foundation: 18 Inch
Finished ?:
Auto. Doors: 0
Mech. Doors: 0
Area: 1440
% Good: 0
Storage Area: 0
No Conc. Floor: 0

Bsmnt Garage:

Carport Area:
Roof:

Cost Est. for Res. Bldg: 1 Mobile Home SWT/DWT Cls Fair Blt 0
(11) Heating System: Forced Warm Air
Ground Area = 960 SF Floor Area = 960 SF.
Phy/Ab.Phy/Func/Econ/Comb. % Good=46/100/100/100/46
Building Areas

Type	Ext. Walls	Roof/Fnd.	Size	Cost New	Depr. Cost	
Main Home	Siding	Comp.Shingle	960			
			Total:	65,251	30,015	
Other Additions/Adjustments						
Skirting, Metal or Vinyl, Vertical			128	1,427	656	
Plumbing						
3 Fixture Bath			1	2,745	1,263	
Water/Sewer						
1000 Gal Septic			1	4,582	2,108	
Water Well, 100 Feet			1	5,680	2,613	
Deck						
Treated Wood			96	2,460	1,132	
Treated Wood			96	2,460	1,132	
Porches						
WCP (1 Story)			9	640	294	
4in Concrete			124	918	422	
4in Concrete			24	178	82	
Garages						
Class: CD Exterior: Pole (Unfinished)						
Base Cost			1440	31,320	14,407	
Local Cost Items						
SHED			172	1,342	550	*4
			Totals:	119,003	54,674	

Notes:
ECF (RESIDENTIAL) 1.297 => TCV: 70,912

*** Information herein deemed reliable but not guaranteed***

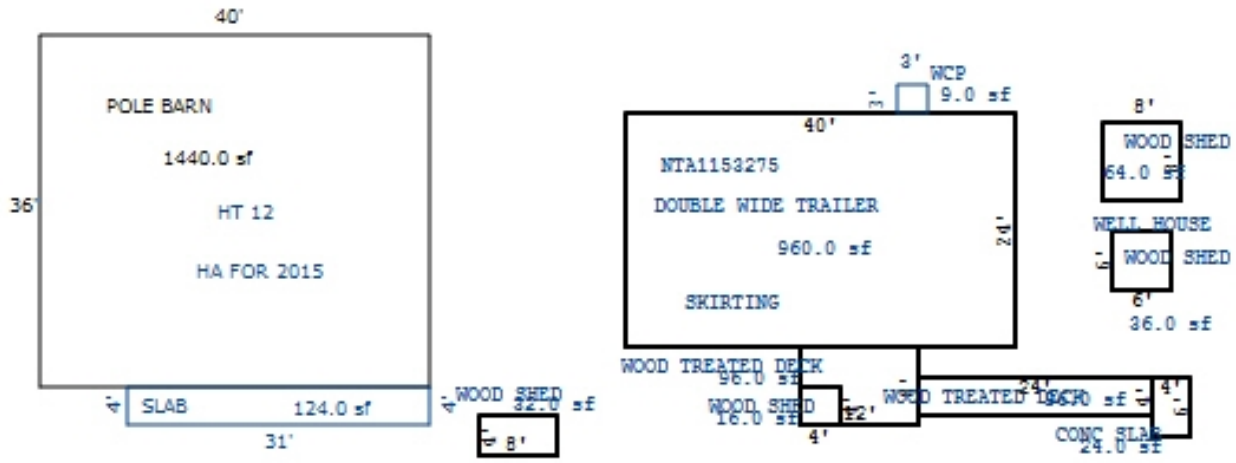

Sketch by Apex Sketch

*** Information herein deemed reliable but not guaranteed***

Parcel Number: 2410-36-3106 Jurisdiction: GREENWOOD TWP County: WEXFORD Printed on 02/15/2024

Grantor	Grantee	Sale Price	Sale Date	Inst. Type	Terms of Sale	Liber & Page	Verified By	Prcnt. Trans.
NELSON, TERRANCE & GLADYS	MCCABE, GEORGE JR ETAL	0	12/21/2007	QC	21-NOT USED/OTHER	607/880	DEED	0.0
MCCABE, GEORGE JR ETAL	SORENSEN, TIMOTHY & LAUREI	63,900	12/21/2007	WD	03-ARM'S LENGTH	607/882	DEED	100.0
HORN, SHAWNEE	MCCABE, GEORGE JR ETAL	17,500	08/02/2004	WD	03-ARM'S LENGTH	559:2086	DEED	0.0

Property Address

5360 E 12 1/2 RD

Owner's Name/Address

SORENSEN, TIMOTHY & LAUREL
5360 E 12 1/2 RD
MANTON MI 49663

Tax Description

E 1/2 OF NW 1/4 OF NE 1/4 OF SW 1/4 --5 A.-- GW. SEC. 36 T24N R10W -MANTON-

Comments/Influences

The Equalizer. Copyright (c) 1999 - 2009.
Licensed To: Township of Greenwood, County of Wexford, Michigan

Class: RESIDENTIAL-IMPROV Zoning:
School: MANTON CONSOLIDATED SCHOOLS
P.R.E. 100% 05/01/2008
:
2024 Est TCV 209,694 TCV/TFA: 187.23

Building Permit(s)	Date	Number	Status
OTHER	01/09/2023	PB23-0001	ENTERED
Pole Barn	08/17/2016	PB16-0160	ENTERED
Res. Add/Alter/Repair	06/24/2008	PM08-10147	
RESIDENTIAL - NEW	08/17/2004	PM7812	

X Improved | Vacant

Public Improvements

- Dirt Road
- Gravel Road
- X Paved Road
- Storm Sewer
- Sidewalk
- Water
- Sewer
- X Electric
- Gas
- Curb
- Street Lights
- Standard Utilities
- Underground Utils.

Topography of Site

- Level
- X Rolling
- Low
- High
- Landscaped
- Swamp
- Wooded
- Pond
- Waterfront
- Ravine
- Wetland
- Flood Plain
- X OPEN/PINES

Who	When	What
GLA	05/11/2020	INSPECTION
GLA	07/10/2019	INSPECTION
GLA	07/10/2019	INSPECTION

Land Value Estimates for Land Table 4010.LAND VALUES

Description	Frontage	Depth	* Factors * Front	Depth	Rate	%Adj.	Reason	Value
ACREAGE			4.760 Acres		5,095	100		24,254
ROW			0.240 Acres		0	100		0
			5.00 Total Acres		Total Est. Land Value =			24,254

Year	Land Value	Building Value	Assessed Value	Board of Review	Tribunal/ Other	Taxable Value
2024	12,100	92,700	104,800			53,819C
2023	10,400	75,600	86,000			51,257C
2022	7,400	63,700	71,100			48,817C
2021	8,500	64,400	72,900			47,258C

*** Information herein deemed reliable but not guaranteed***

Building Type

X	Single Family
	Mobile Home
	Town Home
	Duplex
	A-Frame
X	Wood Frame

Building Style: PLAIN

Yr Built	Remodeled
2002	0

Condition: Good

Room List

	Basement
	1st Floor
	2nd Floor
	Bedrooms

(1) Exterior

	Wood/Shingle
X	Aluminum/Vinyl
	Brick
X	Insulation

(2) Windows

	Many		Large
X	Avg.	X	Avg.
	Few		Small

	Wood Sash
	Metal Sash
X	Vinyl Sash
	Double Hung
	Horiz. Slide
	Casement
	Double Glass
	Patio Doors
X	Storms & Screens

(3) Roof

X	Gable		Gambrel
	Hip		Mansard
	Flat		Shed

X	Asphalt Shingle

Chimney:

(3) Roof (cont.)

	Eavestrough
X	Insulation
0	Front Overhang
0	Other Overhang

(4) Interior

X	Drywall		Plaster
	Paneled		Wood T&G

Trim & Decoration

	Ex	X	Ord		Min

Size of Closets

	Lg	X	Ord		Small

Doors:		Solid	X	H.C.	

(5) Floors

Kitchen:
Other: Linoleum
Other: Carpeted

(6) Ceilings

X	Drywall		

(7) Excavation

Basement: 1120 S.F.
Crawl: 0 S.F.
Slab: 0 S.F.
Height to Joists: 0.0

(8) Basement

	Conc. Block
	Poured Conc.
	Stone
	Treated Wood
	Concrete Floor

(9) Basement Finish

	Recreation SF
	Living SF
	Walkout Doors (B)
	No Floor SF
	Walkout Doors (A)

(10) Floor Support

Joists:
Unsupported Len:
Cntr.Sup:

(11) Heating/Cooling

X	Gas		Oil		Elec.
	Wood		Coal		Steam

	Forced Air w/o Ducts
X	Forced Air w/ Ducts
	Forced Hot Water
	Electric Baseboard
	Elec. Ceil. Radiant
	Radiant (in-floor)
	Electric Wall Heat
	Space Heater
	Wall/Floor Furnace
	Forced Heat & Cool
	Heat Pump
	No Heating/Cooling

	Central Air
	Wood Furnace

(12) Electric

150	Amps Service

No./Qual. of Fixtures

	Ex.	X	Ord.		Min

No. of Elec. Outlets

	Many	X	Ave.		Few

(13) Plumbing

	Average Fixture(s)
1	3 Fixture Bath
	2 Fixture Bath
	Softener, Auto
	Softener, Manual
	Solar Water Heat
	No Plumbing
	Extra Toilet
	Extra Sink
	Separate Shower
	Ceramic Tile Floor
	Ceramic Tile Wains
	Ceramic Tub Alcove
	Vent Fan

(14) Water/Sewer

	Public Water
	Public Sewer
1	Water Well
1	1000 Gal Septic
	2000 Gal Septic

Lump Sum Items:

(15) Built-ins

	Appliance Allow.
	Cook Top
	Dishwasher
	Garbage Disposal
	Bath Heater
	Vent Fan
	Hot Tub
	Unvented Hood
	Vented Hood
	Intercom
	Jacuzzi Tub
	Jacuzzi repl.Tub
	Oven
	Microwave
	Standard Range
	Self Clean Range
	Sauna
	Trash Compactor
	Central Vacuum
	Security System

(15) Fireplaces

	Interior 1 Story
	Interior 2 Story
	2nd/Same Stack
	Two Sided
	Exterior 1 Story
	Exterior 2 Story
	Prefab 1 Story
	Prefab 2 Story
	Heat Circulator
	Raised Hearth
	Wood Stove
	Direct-Vented Gas

Class: CD
Effec. Age: 22
Floor Area: 1,120
Total Base New : 183,302 E.C.F.
Total Depr Cost: 142,976 X 1.297
Estimated T.C.V: 185,440

(16) Porches/Decks

Area	Type
64	WPP
120	WPP

(17) Garage

Year Built: 2016
Car Capacity:
Class: CD
Exterior: Pole
Brick Ven.: 0
Stone Ven.: 0
Common Wall: Detache
Foundation: 18 Inch
Finished ?:
Auto. Doors: 0
Mech. Doors: 0
Area: 768
% Good: 0
Storage Area: 0
No Conc. Floor: 0

Bsmnt Garage:

Carport Area:
Roof:

Cost Est. for Res. Bldg: 1 Single Family PLAIN Cls CD Blt 2002
(11) Heating System: Forced Air w/ Ducts
Ground Area = 1120 SF Floor Area = 1120 SF.
Phy/Ab.Phy/Func/Econ/Comb. % Good=78/100/100/100/78
Building Areas

Stories	Exterior	Foundation	Size	Cost New	Depr. Cost
1 Story	Siding	Basement	1,120		
			Total:	149,503	116,613
Other Additions/Adjustments					
Water/Sewer					
1000 Gal Septic			1	4,582	3,574
Water Well, 100 Feet			1	5,680	4,430
Porches					
WPP			64	2,173	1,695
WPP			120	2,970	2,317
Garages					
Class: CD Exterior: Pole (Unfinished)					
Base Cost			768	18,394	14,347
			Totals:	183,302	142,976

Notes:
ECF (RESIDENTIAL) 1.297 => TCV: 185,440

*** Information herein deemed reliable but not guaranteed***

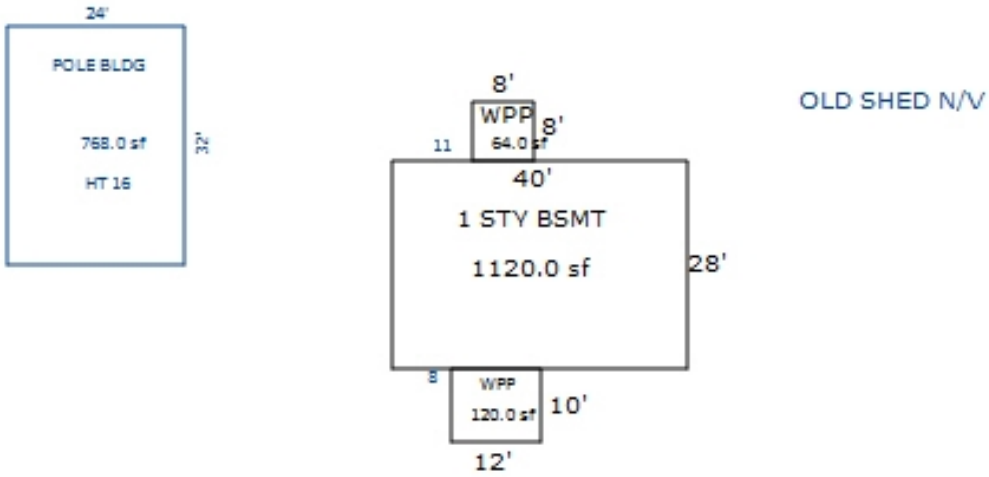

Sketch by Apex Sketch

*** Information herein deemed reliable but not guaranteed***

Parcel Number: 2410-36-3201 Jurisdiction: GREENWOOD TWP County: WEXFORD Printed on 02/15/2024

Grantor	Grantee	Sale Price	Sale Date	Inst. Type	Terms of Sale	Liber & Page	Verified By	Prcnt. Trans.
ELIZABETH WOODFOLK ESTATE	PETERSON, STEVEN	4,500	08/11/1987	WD	03-ARM'S LENGTH	307:716	DEED	0.0

Property Address

5020 E 12 1/2 RD

Owner's Name/Address

PETERSON, STEVEN
& MARGARET
5020 E 12 1/2 RD
MANTON MI 49663

Tax Description

NW 1/4 OF NW 1/4 OF SW 1/4 10 A. GW. SEC. 36 T24N R10W -MANTON-

Comments/Influences

The Equalizer. Copyright (c) 1999 - 2009. Licensed To: Township of Greenwood, County of Wexford, Michigan

Class: RESIDENTIAL-IMPROV Zoning:

School: MANTON CONSOLIDATED SCHOOLS

P.R.E. 0%

:

2024 Est TCV 85,205 TCV/TFA: 48.03

Building Permit(s)	Date	Number	Status

X	Improved		Vacant

	Public Improvements
	Dirt Road
X	Gravel Road
	Paved Road
	Storm Sewer
	Sidewalk
	Water
	Sewer
X	Electric
	Gas
	Curb
	Street Lights
	Standard Utilities
	Underground Utils.

	Topography of Site
	Level
X	Rolling
	Low
	High
	Landscaped
	Swamp
X	Wooded
	Pond
	Waterfront
	Ravine
	Wetland
	Flood Plain
X	OPEN/PINES

Who	When	What
GLA	05/11/2020	INSPECTION
GLA	07/10/2019	INSPECTION
GLA	07/10/2019	INSPECTION

Land Value Estimates for Land Table 4010.LAND VALUES

Description	Frontage	Depth	* Factors * Front	Depth	Rate	%Adj.	Reason	Value
ACREAGE			9.000 Acres		4,759	100		42,828
ROW			1.000 Acres		0	100		0
			10.00 Total Acres		Total Est. Land Value =			42,828

Land Improvement Cost Estimates

Description	Rate	Size	% Good	Cash Value
Wood Frame	22.73	532	42	5,079
Wood Frame	26.18	168	42	1,847
Total Estimated Land Improvements True Cash Value =				6,926

Year	Land Value	Building Value	Assessed Value	Board of Review	Tribunal/ Other	Taxable Value
2024	21,400	21,200	42,600			20,889C
2023	12,600	17,600	30,200			19,895C
2022	11,500	15,000	26,500			18,948C
2021	12,000	14,100	26,100			18,343C

*** Information herein deemed reliable but not guaranteed***

Building Type

	Single Family
X	Mobile Home
	Town Home
	Duplex
	A-Frame

X	Wood Frame

Building Style: SWT/DWT

Yr Built	Remodeled
0	0

Condition: Good

Room List

	Basement
	1st Floor
	2nd Floor
	Bedrooms

(1) Exterior

	Wood/Shingle
	Aluminum/Vinyl
X	Brick
X	Insulation

(2) Windows

	Many		Large
X	Avg.	X	Avg.
	Few		Small

	Wood Sash
	Metal Sash
X	Vinyl Sash
	Double Hung
	Horiz. Slide
	Casement
	Double Glass
	Patio Doors
X	Storms & Screens

(3) Roof

X	Gable		Gambrel
	Hip		Mansard
	Flat		Shed

X	Asphalt Shingle

Chimney:

(3) Roof (cont.)

	Eavestrough
X	Insulation
0	Front Overhang
0	Other Overhang

(4) Interior

X	Drywall		Plaster
	Paneled		Wood T&G

Trim & Decoration

	Ex	X	Ord		Min

Size of Closets

	Lg	X	Ord		Small

Doors:		Solid	X	H.C.	

(5) Floors

Kitchen:
Other: Linoleum
Other: Carpeted

(6) Ceilings

X	Drywall		

(7) Excavation

Basement: 0 S.F.
Crawl: 546 S.F.
Slab: 270 S.F.
Height to Joists: 0.0

(8) Basement

	Conc. Block
	Poured Conc.
	Stone
	Treated Wood
	Concrete Floor

(9) Basement Finish

	Recreation	SF
	Living	SF
	Walkout Doors (B)	
	No Floor	SF
	Walkout Doors (A)	

(10) Floor Support

Joists:
Unsupported Len:
Cntr.Sup:

(11) Heating/Cooling

X	Gas		Oil		Elec.
	Wood		Coal		Steam

X	Forced Warm Air
	Wall Furnace
	Warm & Cool Air
	Heat Pump

	Central Air
	Wood Furnace

(12) Electric

150	Amps Service

No./Qual. of Fixtures

	Ex.	X	Ord.		Min

No. of Elec. Outlets

	Many	X	Ave.		Few

(13) Plumbing

1	Average Fixture(s)
	3 Fixture Bath
	2 Fixture Bath
	Softener, Auto
	Softener, Manual
	Solar Water Heat
	No Plumbing
	Extra Toilet
	Extra Sink
	Separate Shower
	Ceramic Tile Floor
	Ceramic Tile Wains
	Ceramic Tub Alcove
	Vent Fan

(14) Water/Sewer

	Public Water
	Public Sewer
1	Water Well
1	1000 Gal Septic
	2000 Gal Septic

Lump Sum Items:

(15) Built-ins

	Appliance Allow.
	Cook Top
	Dishwasher
	Garbage Disposal
	Bath Heater
	Vent Fan
	Hot Tub
	Unvented Hood
	Vented Hood
	Intercom
	Jacuzzi Tub
	Jacuzzi repl.Tub
	Oven
	Microwave
	Standard Range
	Self Clean Range
	Sauna
	Trash Compactor
	Central Vacuum
	Security System

(15) Fireplaces

	Interior 1 Story
	Interior 2 Story
	2nd/Same Stack
	Two Sided
	Exterior 1 Story
	Exterior 2 Story
	Prefab 1 Story
	Prefab 2 Story
	Heat Circulator
	Raised Hearth
	Wood Stove
	Direct-Vented Gas

Class: Fair
Effec. Age: 25
Floor Area:
Total Base New : 143,552 E.C.F.
Total Depr Cost: 9,997 X 1.297
Estimated T.C.V: 12,966

(16) Porches/Decks

Area	Type
48	CCP (1 Story)
287	WCP (1 Story)
42	WGEP (1 Story)
64	WPP
42	CCP (1 Story)
144	Treated Wood

(17) Garage

Year Built:
Car Capacity:
Class: D
Exterior: Siding
Brick Ven.: 0
Stone Ven.: 0
Common Wall: Detache
Foundation: 18 Inch
Finished ?:
Auto. Doors: 0
Mech. Doors: 0
Area: 360
% Good: 0
Storage Area: 0
No Conc. Floor: 0

Bsmnt Garage:

Carport Area:
Roof:

Cost Est. for Res. Bldg: 1 Mobile Home SWT/DWT Cls Fair Blt 0
(11) Heating System: Wall Furnace
Ground Area = 1488 SF Floor Area = 1488 SF.
Phy/Ab.Phy/Func/Econ/Comb. % Good=35/20/100/100/7
Building Areas

Type	Ext. Walls	Roof/Fnd.	Size	Cost New	Depr. Cost	
Main Home	Ribbed	Metal	672			
Addition	Siding	Crawl	462			
Addition	Siding	Crawl	84			
Addition	Siding	Slab	270			
			Total:	93,011	6,510	
Other Additions/Adjustments						
Skirting, Metal or Vinyl, Vertical			56	624	44	
Water/Sewer						
1000 Gal Septic			1	4,582	321	
Water Well, 100 Feet			1	5,680	398	
Porches						
CCP (1 Story)			48	1,116	78	
WCP (1 Story)			287	9,261	648	
WGEP (1 Story)			42	4,114	288	
WPP			64	2,192	153	
CCP (1 Story)			42	997	70	
Deck						
Treated Wood			144	3,288	230	
Garages						
Class: D Exterior: Siding Foundation: 18 Inch (Unfinished)						
Base Cost			360	12,478	873	
Local Cost Items						
SHED			532	4,150	257	*3
SHED #2			168	1,310	81	*3

<<<<< Calculations too long. See Valuation printout for complete pricing. >>>>>

*** Information herein deemed reliable but not guaranteed***

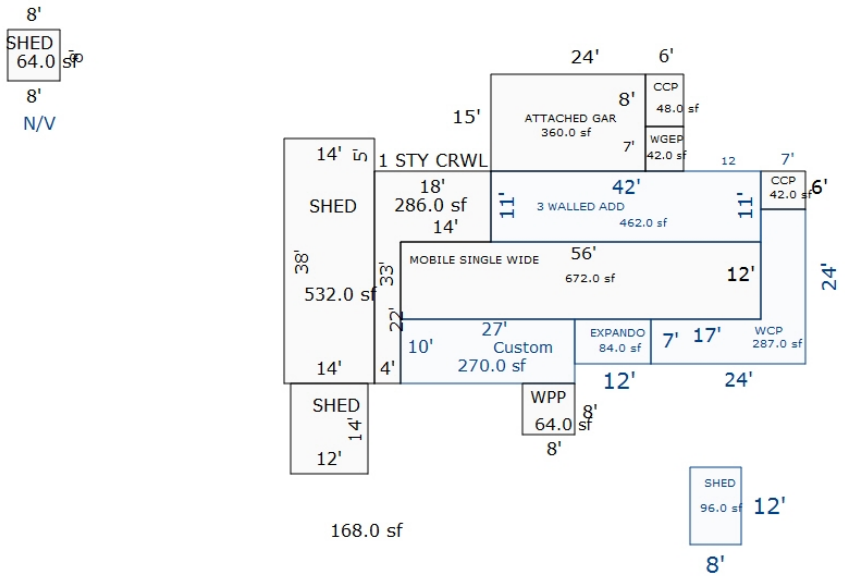

Sketch by Apex Sketch

*** Information herein deemed reliable but not guaranteed***

Building Type

X	Single Family
	Mobile Home
	Town Home
	Duplex
	A-Frame
X	Wood Frame

Building Style: PLAIN

Yr Built	Remodeled
0	0

Condition: Good

Room List

	Basement
	1st Floor
	2nd Floor
	Bedrooms

(1) Exterior

X	Wood/Shingle
	Aluminum/Vinyl
	Brick
X	Insulation

(2) Windows

X	Many		Large
	Avg.	X	Avg.
	Few		Small

	Wood Sash
	Metal Sash
X	Vinyl Sash
	Double Hung
	Horiz. Slide
	Casement
	Double Glass
	Patio Doors
X	Storms & Screens

(3) Roof

X	Gable		Gambrel
	Hip		Mansard
	Flat		Shed

X	Asphalt Shingle

Chimney:

(3) Roof (cont.)

	Eavestrough
X	Insulation
0	Front Overhang
0	Other Overhang

(4) Interior

X	Drywall		Plaster
	Paneled		Wood T&G

Trim & Decoration

	Ex	X	Ord		Min

Size of Closets

	Lg	X	Ord		Small

Doors:		Solid	X	H.C.	

(5) Floors

Kitchen:
Other: Linoleum
Other: Carpeted

(6) Ceilings

X	Drywall		

(7) Excavation

Basement: 0 S.F.
Crawl: 286 S.F.
Slab: 0 S.F.
Height to Joists: 0.0

(8) Basement

	Conc. Block
	Poured Conc.
	Stone
	Treated Wood
	Concrete Floor

(9) Basement Finish

	Recreation SF
	Living SF
	Walkout Doors (B)
	No Floor SF
	Walkout Doors (A)

(10) Floor Support

Joists:
Unsupported Len:
Cntr.Sup:

(11) Heating/Cooling

X	Gas		Oil		Elec.
	Wood		Coal		Steam

	Forced Air w/o Ducts
X	Forced Air w/ Ducts
	Forced Hot Water
	Electric Baseboard
	Elec. Ceil. Radiant
	Radiant (in-floor)
	Electric Wall Heat
	Space Heater
	Wall/Floor Furnace
	Forced Heat & Cool
	Heat Pump
	No Heating/Cooling

	Central Air
	Wood Furnace

(12) Electric

150	Amps Service

No./Qual. of Fixtures

	Ex.	X	Ord.		Min

No. of Elec. Outlets

	Many	X	Ave.		Few

(13) Plumbing

1	Average Fixture(s)
	3 Fixture Bath
	2 Fixture Bath
	Softener, Auto
	Softener, Manual
	Solar Water Heat
	No Plumbing
	Extra Toilet
	Extra Sink
	Separate Shower
	Ceramic Tile Floor
	Ceramic Tile Wains
	Ceramic Tub Alcove
	Vent Fan

(14) Water/Sewer

	Public Water
	Public Sewer
	Water Well
	1000 Gal Septic
	2000 Gal Septic

Lump Sum Items:

(15) Built-ins

	Appliance Allow.
	Cook Top
	Dishwasher
	Garbage Disposal
	Bath Heater
	Vent Fan
	Hot Tub
	Unvented Hood
	Vented Hood
	Intercom
	Jacuzzi Tub
	Jacuzzi repl.Tub
	Oven
	Microwave
	Standard Range
	Self Clean Range
	Sauna
	Trash Compactor
	Central Vacuum
	Security System

(15) Fireplaces

	Interior 1 Story
	Interior 2 Story
	2nd/Same Stack
	Two Sided
	Exterior 1 Story
	Exterior 2 Story
	Prefab 1 Story
	Prefab 2 Story
	Heat Circulator
	Raised Hearth
	Wood Stove
	Direct-Vented Gas

Class: CD
Effec. Age: 59
Floor Area: 286
Total Base New : 38,527 E.C.F.
Total Depr Cost: 17,336 X 1.297
Estimated T.C.V: 22,485

(16) Porches/Decks

Area	Type

(17) Garage

Year Built:
Car Capacity:
Class:
Exterior:
Brick Ven.:
Stone Ven.:
Common Wall:
Foundation:
Finished ?:
Auto. Doors:
Mech. Doors:
Area:
% Good:
Storage Area:
No Conc. Floor:

Bsmnt Garage:

Carport Area:
Roof:

Cost Est. for Res. Bldg: 2 Single Family PLAIN Cls CD Blt 0
(11) Heating System: Forced Air w/ Ducts
Ground Area = 286 SF Floor Area = 286 SF.
Phy/Ab.Phy/Func/Econ/Comb. % Good=45/100/100/100/45
Building Areas

Stories	Exterior	Foundation	Size	Cost New	Depr. Cost
1 Story	Siding	Crawl Space	286		
			Total:	38,527	17,336

Other Additions/Adjustments

Totals:	38,527	17,336

Notes:

ECF (RESIDENTIAL) 1.297 => TCV: 22,485

*** Information herein deemed reliable but not guaranteed***

Parcel Number: 2410-36-3202 Jurisdiction: GREENWOOD TWP County: WEXFORD Printed on 02/15/2024

Grantor	Grantee	Sale Price	Sale Date	Inst. Type	Terms of Sale	Liber & Page	Verified By	Prcnt. Trans.
FEDERAL NATIONAL MORTGAGE	MITCHELL, JAMES	45,000	04/22/2014	WD	11-FROM LENDING INSTITUTI	668/1646	DEED	100.0
GREEN TREE SERVICING LLC	FEDERAL NATIONAL MORTGAGE	0	07/31/2013	QC	17-LENDING TO LENDING	662/875	DEED	0.0
BRETTSCHNEIDER, MICHAEL	GREEN TREE SERVICING LLC	0	07/19/2013	SD	10-FORECLOSURE	660/2889	DEED	0.0
WILCOX, RANDALL V.	BRETTSCHNEIDER, MICHAEL	70,000	06/22/1992	WD	03-ARM'S LENGTH	330:45	DEED	0.0

Property Address

6304 N 35 RD

Owner's Name/Address

MITCHELL, JAMES
6304 N 35 RD
MANTON MI 49663

Tax Description

SW 1/4 OF NW 1/4 OF SW 1/4 10 A. GW. SEC. 36 T24N R10W -MANTON-

Comments/Influences

Class: RESIDENTIAL-IMPROV Zoning:

School: MANTON CONSOLIDATED SCHOOLS

P.R.E. 100% 09/22/2014

:

2024 Est TCV 158,262 TCV/TFA: 111.30

Building Permit(s)	Date	Number	Status

X Improved | Vacant

Public Improvements

- X Dirt Road
- X Gravel Road
- Paved Road
- Storm Sewer
- Sidewalk
- Water
- Sewer
- X Electric
- Gas
- Curb
- Street Lights
- Standard Utilities
- Underground Utils.

Topography of Site

- Level
- X Rolling
- Low
- X High
- Landscaped
- Swamp
- X Wooded
- Pond
- Waterfront
- Ravine
- Wetland
- Flood Plain
- X OPEN

Land Value Estimates for Land Table 4010.LAND VALUES

Description	Frontage	Depth	* Factors * Front	Depth	Rate	%Adj.	Reason	Value
	500.00	0.00	1.0000	1.0000	0	100		0
ACREAGE			9.500 Acres		4,694	100		44,589
ROW			0.500 Acres		0	100		0

500 Actual Front Feet, 10.00 Total Acres Total Est. Land Value = 44,589

Land Improvement Cost Estimates

Description	Rate	Size	% Good	Cash Value
D/W/P: 4in Concrete	6.11	1133	45	3,115

Total Estimated Land Improvements True Cash Value = 3,115

The Equalizer. Copyright (c) 1999 - 2009.
Licensed To: Township of Greenwood, County of Wexford, Michigan

Who	When	What
GLA	05/11/2020	INSPECTION
GLA	07/10/2019	INSPECTION
GLA	07/10/2019	INSPECTION

Year	Land Value	Building Value	Assessed Value	Board of Review	Tribunal/ Other	Taxable Value
2024	22,300	56,800	79,100			53,659C
2023	12,800	46,000	58,800			51,104C
2022	12,800	38,400	51,200			48,671C
2021	13,000	38,200	51,200			47,117C

*** Information herein deemed reliable but not guaranteed***

Building Type

X	Single Family
	Mobile Home
	Town Home
	Duplex
	A-Frame
X	Wood Frame

Building Style: PLAIN

Yr Built	Remodeled
0	0

Condition: Good

Room List

	Basement
	1st Floor
	2nd Floor
	Bedrooms

(1) Exterior

X	Wood/Shingle
	Aluminum/Vinyl
	Brick
X	Insulation

(2) Windows

	Many		Large
X	Avg.	X	Avg.
	Few		Small

X	Wood Sash
	Metal Sash
	Vinyl Sash
	Double Hung
	Horiz. Slide
	Casement
	Double Glass
	Patio Doors
X	Storms & Screens

(3) Roof

X	Gable		Gambrel
	Hip		Mansard
	Flat		Shed

X	Asphalt Shingle

Chimney:

(3) Roof (cont.)

	Eavestrough
X	Insulation
0	Front Overhang
0	Other Overhang

(4) Interior

X	Drywall		Plaster
	Paneled		Wood T&G

Trim & Decoration

	Ex	X	Ord		Min

Size of Closets

	Lg	X	Ord		Small

Doors:		Solid	X	H.C.	

(5) Floors

Kitchen:
Other: Linoleum
Other: Carpeted

(6) Ceilings

X	Drywall

(7) Excavation

Basement: 0 S.F.
Crawl: 0 S.F.
Slab: 1260 S.F.
Height to Joists: 0.0

(8) Basement

	Conc. Block
	Poured Conc.
	Stone
	Treated Wood
	Concrete Floor

(9) Basement Finish

	Recreation SF
	Living SF
	Walkout Doors (B)
	No Floor SF
	Walkout Doors (A)

(10) Floor Support

Joists:
Unsupported Len:
Cntr.Sup:

(11) Heating/Cooling

X	Gas		Oil		Elec.
	Wood		Coal		Steam

	Forced Air w/o Ducts
X	Forced Air w/ Ducts
	Forced Hot Water
	Electric Baseboard
	Elec. Ceil. Radiant
	Radiant (in-floor)
	Electric Wall Heat
	Space Heater
	Wall/Floor Furnace
	Forced Heat & Cool
	Heat Pump
	No Heating/Cooling

	Central Air
	Wood Furnace

(12) Electric

150	Amps Service

No./Qual. of Fixtures

	Ex.	X	Ord.		Min

No. of Elec. Outlets

	Many	X	Ave.		Few

(13) Plumbing

2	Average Fixture(s)
	3 Fixture Bath
	2 Fixture Bath
	Softener, Auto
	Softener, Manual
	Solar Water Heat
	No Plumbing
	Extra Toilet
	Extra Sink
	Separate Shower
	Ceramic Tile Floor
	Ceramic Tile Wains
	Ceramic Tub Alcove
	Vent Fan

(14) Water/Sewer

	Public Water
	Public Sewer
1	Water Well
1	1000 Gal Septic
	2000 Gal Septic

Lump Sum Items:

(15) Built-ins

	Appliance Allow.
	Cook Top
	Dishwasher
	Garbage Disposal
	Bath Heater
	Vent Fan
	Hot Tub
	Unvented Hood
	Vented Hood
	Intercom
	Jacuzzi Tub
	Jacuzzi repl.Tub
	Oven
	Microwave
	Standard Range
	Self Clean Range
	Sauna
	Trash Compactor
	Central Vacuum
	Security System

(15) Fireplaces

	Interior 1 Story
	Interior 2 Story
	2nd/Same Stack
	Two Sided
	Exterior 1 Story
	Exterior 2 Story
	Prefab 1 Story
	Prefab 2 Story
	Heat Circulator
	Raised Hearth
	Wood Stove
	Direct-Vented Gas

Class: CD
Effec. Age: 59
Floor Area: 1,422
Total Base New : 189,426 E.C.F.
Total Depr Cost: 85,241 X 1.297
Estimated T.C.V: 110,558

(16) Porches/Decks

Area	Type
1133	4in Concrete

(17) Garage

Year Built:
Car Capacity:
Class: CD
Exterior: Siding
Brick Ven.: 0
Stone Ven.: 0
Common Wall: 1 Wall
Foundation: 18 Inch
Finished ?:
Auto. Doors: 0
Mech. Doors: 0
Area: 456
% Good: 0
Storage Area: 0
No Conc. Floor: 0

Bsmnt Garage:

Carport Area:
Roof:

Cost Est. for Res. Bldg: 1 Single Family PLAIN Cls CD Blt 0
(11) Heating System: Forced Air w/ Ducts
Ground Area = 1260 SF Floor Area = 1422 SF.
Phy/Ab.Phy/Func/Econ/Comb. % Good=45/100/100/100/45
Building Areas

Stories	Exterior	Foundation	Size	Cost New	Depr. Cost
1.25 Story	Siding	Slab	648		
1 Story	Siding	Slab	276		
1 Story	Siding	Slab	336		
			Total:	152,008	68,403
Other Additions/Adjustments					
Plumbing					
3 Fixture Bath			1	3,887	1,749
Water/Sewer					
1000 Gal Septic			1	4,582	2,062
Water Well, 100 Feet			1	5,680	2,556
Garages					
Class: CD Exterior: Siding Foundation: 18 Inch (Unfinished)					
Base Cost			456	16,945	7,625
Common Wall: 1 Wall			1	-2,060	-927
Porches					
4in Concrete			1133	8,384	3,773
			Totals:	189,426	85,241

Notes:
ECF (RESIDENTIAL) 1.297 => TCV: 110,558

*** Information herein deemed reliable but not guaranteed***

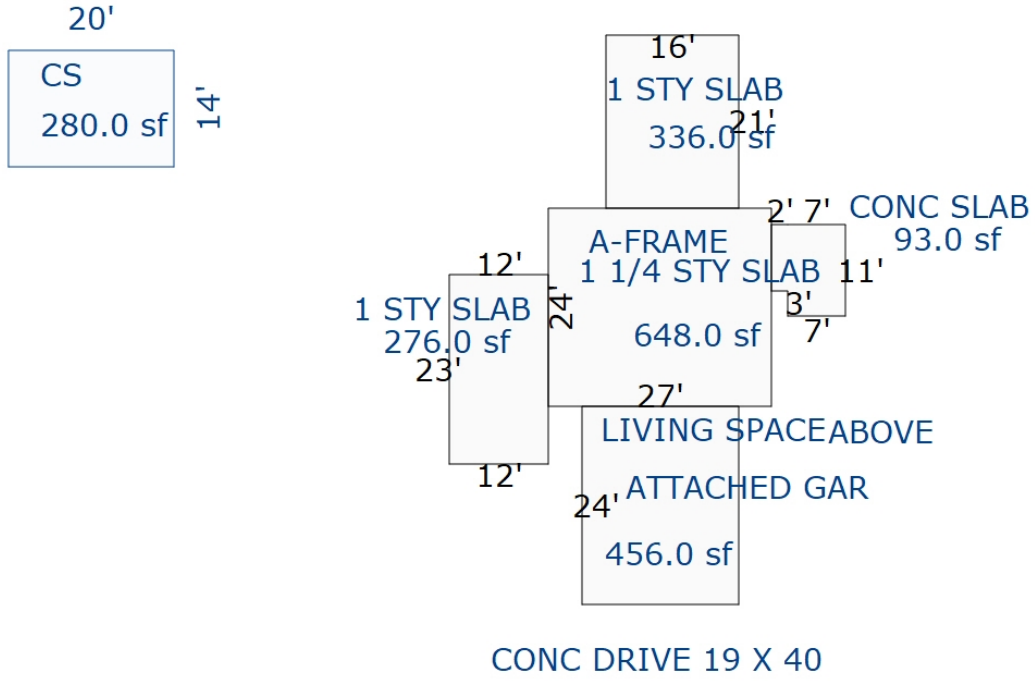

Sketch by Apex Sketch

*** Information herein deemed reliable but not guaranteed***

Parcel Number: 2410-36-3204 Jurisdiction: GREENWOOD TWP County: WEXFORD Printed on 02/15/2024

Grantor	Grantee	Sale Price	Sale Date	Inst. Type	Terms of Sale	Liber & Page	Verified By	Prcnt. Trans.
NYE, ROBERT L.	WENZEL, MARCUS & HOLLY	38,500	05/24/1996	WD	03-ARM'S LENGTH	350:712	DEED	0.0

Property Address

5152 E 12 1/2 RD

Owner's Name/Address

WENZEL, MARCUS G.
& HOLLY J.
5152 E 12 1/2 RD
MANTON MI 49663

Tax Description

W 165 FT OF NE 1/4 OF NW 1/4 OF SW 1/4
--2.45 A M/L-- GW. SEC. 36 T24N R10W
-MANTON-

Comments/Influences

Class: RESIDENTIAL-IMPROV Zoning:
School: MANTON CONSOLIDATED SCHOOLS
P.R.E. 100% / /
:
2024 Est TCV 89,349 TCV/TFA: 109.50

Building Permit(s)	Date	Number	Status
RESIDENTIAL - REMODEL	09/19/2002	PM6203	

X Improved | Vacant

	Public Improvements
	Dirt Road
X	Gravel Road
	Paved Road
	Storm Sewer
	Sidewalk
	Water
	Sewer
X	Electric
	Gas
	Curb
	Street Lights
	Standard Utilities
	Underground Utils.

	Topography of Site
	Level
X	Rolling
X	Low
	High
	Landscaped
	Swamp
	Wooded
	Pond
	Waterfront
	Ravine
	Wetland
	Flood Plain
X	OPEN/PINES

Who	When	What
GLA	05/11/2020	INSPECTION
GLA	07/10/2019	INSPECTION
GLA	07/10/2019	INSPECTION

Land Value Estimates for Land Table 4010.LAND VALUES

Description	Frontage	Depth	* Factors * Front	Depth	Rate	%Adj.	Reason	Value
ACREAGE			2.330 Acres		5,546	100		12,922
ROW			0.120 Acres		0	100		0
			2.45 Total Acres		Total Est. Land Value =			12,922

Land Improvement Cost Estimates

Description	Rate	Size	% Good	Cash Value
Wood Frame	18.79	308	42	2,431
Wood Frame	25.79	80	42	866
Total Estimated Land Improvements True Cash Value =				3,297

Year	Land Value	Building Value	Assessed Value	Board of Review	Tribunal/ Other	Taxable Value
2024	6,500	38,200	44,700			21,649C
2023	6,400	31,600	38,000			20,619C
2022	5,200	26,900	32,100			19,638C
2021	5,100	27,200	32,300			19,011C

The Equalizer. Copyright (c) 1999 - 2009.
Licensed To: Township of Greenwood, County of Wexford, Michigan

*** Information herein deemed reliable but not guaranteed***

Building Type

X	Single Family
	Mobile Home
	Town Home
	Duplex
	A-Frame
X	Wood Frame

Building Style: PLAIN

Yr Built	Remodeled
0	0

Condition: Good

Room List

	Basement
	1st Floor
	2nd Floor
	Bedrooms

(1) Exterior

	Wood/Shingle
X	Aluminum/Vinyl
	Brick
X	Insulation

(2) Windows

	Many		Large
X	Avg.	X	Avg.
	Few		Small

	Wood Sash
	Metal Sash
X	Vinyl Sash
	Double Hung
	Horiz. Slide
	Casement
	Double Glass
	Patio Doors
X	Storms & Screens

(3) Roof

X	Gable		Gambrel
	Hip		Mansard
	Flat		Shed

X	Asphalt Shingle

Chimney:

(3) Roof (cont.)

	Eavestrough
X	Insulation
0	Front Overhang
0	Other Overhang

(4) Interior

X	Drywall		Plaster
	Paneled		Wood T&G

Trim & Decoration

	Ex	X	Ord		Min

Size of Closets

	Lg	X	Ord		Small

Doors:		Solid	X	H.C.	

(5) Floors

Kitchen:
Other: Linoleum
Other: Carpeted

(6) Ceilings

X	Drywall		

(7) Excavation

Basement: 0 S.F.
Crawl: 0 S.F.
Slab: 816 S.F.
Height to Joists: 0.0

(8) Basement

	Conc. Block
	Poured Conc.
	Stone
	Treated Wood
	Concrete Floor

(9) Basement Finish

	Recreation SF
	Living SF
	Walkout Doors (B)
	No Floor SF
	Walkout Doors (A)

(10) Floor Support

Joists:
Unsupported Len:
Cntr.Sup:

(11) Heating/Cooling

X	Gas		Oil		Elec.
	Wood		Coal		Steam

	Forced Air w/o Ducts
X	Forced Air w/ Ducts
	Forced Hot Water
	Electric Baseboard
	Elec. Ceil. Radiant
	Radiant (in-floor)
	Electric Wall Heat
	Space Heater
	Wall/Floor Furnace
	Forced Heat & Cool
	Heat Pump
	No Heating/Cooling

	Central Air
	Wood Furnace

(12) Electric

150	Amps Service

No./Qual. of Fixtures

	Ex.	X	Ord.		Min

No. of Elec. Outlets

	Many	X	Ave.		Few

(13) Plumbing

	Average Fixture(s)
1	3 Fixture Bath
	2 Fixture Bath
	Softener, Auto
	Softener, Manual
	Solar Water Heat
	No Plumbing
	Extra Toilet
	Extra Sink
	Separate Shower
	Ceramic Tile Floor
	Ceramic Tile Wains
	Ceramic Tub Alcove
	Vent Fan

(14) Water/Sewer

	Public Water
	Public Sewer
1	Water Well
1	1000 Gal Septic
	2000 Gal Septic

Lump Sum Items:

(15) Built-ins

	Appliance Allow.
	Cook Top
	Dishwasher
	Garbage Disposal
	Bath Heater
	Vent Fan
	Hot Tub
	Unvented Hood
	Vented Hood
	Intercom
	Jacuzzi Tub
	Jacuzzi repl.Tub
	Oven
	Microwave
	Standard Range
	Self Clean Range
	Sauna
	Trash Compactor
	Central Vacuum
	Security System

(15) Fireplaces

1	Interior 1 Story
	Interior 2 Story
	2nd/Same Stack
	Two Sided
	Exterior 1 Story
	Exterior 2 Story
	Prefab 1 Story
	Prefab 2 Story
	Heat Circulator
	Raised Hearth
	Wood Stove
	Direct-Vented Gas

Class: D
Effec. Age: 46
Floor Area: 816
Total Base New : 104,415 E.C.F.
Total Depr Cost: 56,384 X 1.297
Estimated T.C.V: 73,130

(16) Porches/Decks

Area	Type
54	4in Concrete

(17) Garage

Year Built:
Car Capacity:
Class:
Exterior:
Brick Ven.:
Stone Ven.:
Common Wall:
Foundation:
Finished ?:
Auto. Doors:
Mech. Doors:
Area:
% Good:
Storage Area:
No Conc. Floor:

Bsmnt Garage:

Carport Area:
Roof:

Cost Est. for Res. Bldg: 1 Single Family PLAIN Cls D Blt 0
(11) Heating System: Forced Air w/ Ducts
Ground Area = 816 SF Floor Area = 816 SF.
Phy/Ab.Phy/Func/Econ/Comb. % Good=54/100/100/100/54
Building Areas

Stories	Exterior	Foundation	Size	Cost New	Depr. Cost
1 Story	Siding	Slab	816		
			Total:	90,058	48,632
Other Additions/Adjustments					
Water/Sewer					
1000 Gal Septic			1	4,293	2,318
Water Well, 100 Feet			1	5,545	2,994
Fireplaces					
Interior 1 Story			1	4,159	2,246
Porches					
4in Concrete			54	360	194
			Totals:	104,415	56,384

Notes:

ECF (RESIDENTIAL) 1.297 => TCV: 73,130

*** Information herein deemed reliable but not guaranteed***

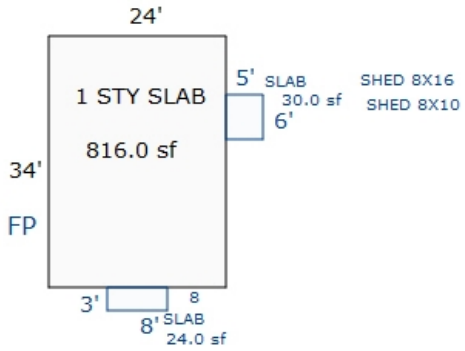

Sketch by Apex Sketch

*** Information herein deemed reliable but not guaranteed***

Parcel Number: 2410-36-3205 Jurisdiction: GREENWOOD TWP County: WEXFORD Printed on 02/15/2024

Grantor	Grantee	Sale Price	Sale Date	Inst. Type	Terms of Sale	Liber & Page	Verified By	Prcnt. Trans.
WEXFORD COUNTY	GREENWOOD TOWNSHIP	0	08/22/2023	QC	21-NOT USED/OTHER	695/2726	DEED	100.0
MORRIS, DENNIS L.	WEXFORD COUNTY	0	02/24/2023	QC	06-COURT JUDGEMENT	694/2286	DEED	100.0

Property Address

Owner's Name/Address

GREENWOOD TOWNSHIP
6761 N 35 RD P.O BOX 398
MANTON MI 49663

Tax Description

E 165 FT OF W 330 FT OF NE 1/4 OF NW 1/4 OF SW 1/4 --2.45 A M/L-- GW. SEC. 36 T24N R10W -MANTON-

Comments/Influences

Class: RESIDENTIAL-VACANT Zoning:

School: MANTON CONSOLIDATED SCHOOLS

P.R.E. 0%

:

2024 Est TCV 0

Building Permit(s)	Date	Number	Status

	Improved	X	Vacant

	Public Improvements
X	Dirt Road
X	Gravel Road
	Paved Road
	Storm Sewer
	Sidewalk
	Water
	Sewer
X	Electric
	Gas
	Curb
	Street Lights
	Standard Utilities
	Underground Utils.

	Topography of Site
X	Level
	Rolling
	Low
	High
	Landscaped
	Swamp
	Wooded
	Pond
	Waterfront
	Ravine
	Wetland
	Flood Plain
X	OPEN/PINES

Who	When	What
GLA	05/11/2020	INSPECTION
GLA	07/10/2019	INSPECTION
GLA	07/10/2019	INSPECTION

Land Value Estimates for Land Table 4010.LAND VALUES

Description	Frontage	Depth	* Factors * Front	Depth	Rate	%Adj.	Reason	Value
ACREAGE			2.330 Acres		5,546	100		12,922
ROW			0.120 Acres		0	100		0
			2.45 Total Acres		Total Est. Land Value =			12,922

Year	Land Value	Building Value	Assessed Value	Board of Review	Tribunal/ Other	Taxable Value
2024	EXEMPT	EXEMPT	EXEMPT			EXEMPT
2023	6,400	0	6,400			3,599C
2022	5,200	0	5,200			3,428C
2021	5,100	0	5,100			3,319C

The Equalizer. Copyright (c) 1999 - 2009.
Licensed To: Township of Greenwood, County of Wexford, Michigan

*** Information herein deemed reliable but not guaranteed***

Parcel Number: 2410-36-3206 Jurisdiction: GREENWOOD TWP County: WEXFORD Printed on 02/15/2024

Grantor	Grantee	Sale Price	Sale Date	Inst. Type	Terms of Sale	Liber & Page	Verified By	Prcnt. Trans.

Property Address

Owner's Name/Address

WOOD, JOE
4619 E 16 RD
MANTON MI 49663

Tax Description

E 165 FT OF W 495 FT OF NE 1/4 OF NW 1/4 OF SW 1/4 --2.45 A M/L-- TOG W/ EASMT L378 P931 '00 GW. SEC. 36 T24N R10W -MANTON-

Comments/Influences

Class: RESIDENTIAL-IMPROV Zoning:

School: MANTON CONSOLIDATED SCHOOLS

P.R.E. 0%

:

2024 Est TCV 15,195 TCV/TFA: 0.00

Building Permit(s)	Date	Number	Status

X Improved | Vacant

	Public Improvements
	Dirt Road
X	Gravel Road
	Paved Road
	Storm Sewer
	Sidewalk
	Water
	Sewer
X	Electric
	Gas
	Curb
	Street Lights
	Standard Utilities
	Underground Utils.

	Topography of Site
X	Level
	Rolling
	Low
	High
	Landscaped
	Swamp
	Wooded
	Pond
	Waterfront
	Ravine
	Wetland
	Flood Plain
X	OPEN/PINES

Who	When	What
GLA	05/11/2020	INSPECTION
GLA	07/10/2019	INSPECTION
GLA	07/10/2019	INSPECTION

Land Value Estimates for Land Table 4010.LAND VALUES

Description	Frontage	Depth	* Factors * Front	Depth	Rate	%Adj.	Reason	Value
ACREAGE			2.330 Acres		5,546	100		12,922
ROW			0.120 Acres		0	100		0
			2.45 Total Acres		Total Est. Land Value =			12,922

Year	Land Value	Building Value	Assessed Value	Board of Review	Tribunal/ Other	Taxable Value
2024	6,500	1,100	7,600			2,075C
2023	6,400	1,000	7,400			1,977C
2022	5,200	900	6,100			1,883C
2021	5,100	900	6,000			1,823C

The Equalizer. Copyright (c) 1999 - 2009.
Licensed To: Township of Greenwood, County of Wexford, Michigan

*** Information herein deemed reliable but not guaranteed***

Building Type

X	Single Family
	Mobile Home
	Town Home
	Duplex
	A-Frame
X	Wood Frame

Building Style: PLAIN

Yr Built	Remodeled
0	0

Condition: Good
Part. Construct.: 30%

Room List

	Basement
	1st Floor
	2nd Floor
	Bedrooms

(1) Exterior

	Wood/Shingle
X	Aluminum/Vinyl
	Brick
X	Insulation

(2) Windows

	Many		Large
X	Avg.	X	Avg.
	Few		Small

	Wood Sash
	Metal Sash
X	Vinyl Sash
	Double Hung
	Horiz. Slide
	Casement
	Double Glass
	Patio Doors
X	Storms & Screens

(3) Roof

X	Gable		Gambrel
	Hip		Mansard
	Flat		Shed

X	Asphalt Shingle

Chimney:

(3) Roof (cont.)

	Eavestrough
X	Insulation
0	Front Overhang
0	Other Overhang

(4) Interior

X	Drywall		Plaster
	Paneled		Wood T&G

Trim & Decoration

	Ex	X	Ord		Min

Size of Closets

	Lg	X	Ord		Small

Doors:		Solid	X	H.C.	

(5) Floors

Kitchen:
Other: Linoleum
Other: Carpeted

(6) Ceilings

X	Drywall

(7) Excavation

Basement: 0 S.F.
Crawl: 0 S.F.
Slab: 0 S.F.
Height to Joists: 0.0

(8) Basement

	Conc. Block
	Poured Conc.
	Stone
	Treated Wood
	Concrete Floor

(9) Basement Finish

	Recreation SF
	Living SF
	Walkout Doors (B)
	No Floor SF
	Walkout Doors (A)

(10) Floor Support

Joists:
Unsupported Len:
Cntr.Sup:

(11) Heating/Cooling

X	Gas		Oil		Elec.
	Wood		Coal		Steam

	Forced Air w/o Ducts
	Forced Air w/ Ducts
	Forced Hot Water
	Electric Baseboard
	Elec. Ceil. Radiant
	Radiant (in-floor)
	Electric Wall Heat
	Space Heater
	Wall/Floor Furnace
	Forced Heat & Cool
	Heat Pump
X	No Heating/Cooling

	Central Air
	Wood Furnace

(12) Electric

150	Amps Service

No./Qual. of Fixtures

	Ex.	X	Ord.		Min

No. of Elec. Outlets

	Many	X	Ave.		Few

(13) Plumbing

	Average Fixture(s)
1	3 Fixture Bath
	2 Fixture Bath
	Softener, Auto
	Softener, Manual
	Solar Water Heat
	No Plumbing
	Extra Toilet
	Extra Sink
	Separate Shower
	Ceramic Tile Floor
	Ceramic Tile Wains
	Ceramic Tub Alcove
	Vent Fan

(14) Water/Sewer

	Public Water
	Public Sewer
	Water Well
	1000 Gal Septic
	2000 Gal Septic

Lump Sum Items:

(15) Built-ins

	Appliance Allow.
	Cook Top
	Dishwasher
	Garbage Disposal
	Bath Heater
	Vent Fan
	Hot Tub
	Unvented Hood
	Vented Hood
	Intercom
	Jacuzzi Tub
	Jacuzzi repl.Tub
	Oven
	Microwave
	Standard Range
	Self Clean Range
	Sauna
	Trash Compactor
	Central Vacuum
	Security System

(15) Fireplaces

	Interior 1 Story
	Interior 2 Story
	2nd/Same Stack
	Two Sided
	Exterior 1 Story
	Exterior 2 Story
	Prefab 1 Story
	Prefab 2 Story
	Heat Circulator
	Raised Hearth
	Wood Stove
	Direct-Vented Gas

Class: D
Effec. Age: 20
Floor Area: 0
Total Base New : 22,464 E.C.F.
Total Depr Cost: 5,840 X 1.297
Estimated T.C.V: 7,575

(16) Porches/Decks

Area	Type

(17) Garage

Year Built:
Car Capacity:
Class: CD
Exterior: Pole
Brick Ven.: 0
Stone Ven.: 0
Common Wall: Detache
Foundation: 18 Inch
Finished ?:
Auto. Doors: 0
Mech. Doors: 0
Area: 1440
% Good: 26
Storage Area: 0
No Conc. Floor: 1440

Bsmnt Garage:

Carport Area:
Roof:

Cost Est. for Res. Bldg: 1 Single Family PLAIN Cls D Blt 0
(11) Heating System: No Heating/Cooling
Ground Area = 0 SF Floor Area = 0 SF.
Phy/Ab.Phy/Func/Econ/Comb. % Good=80/100/100/100/80
Building Areas

Stories	Exterior	Foundation	Size	Cost New	Depr. Cost	
Other Additions/Adjustments						
Garages						
Class: CD Exterior: Pole (Unfinished)						
Base Cost			1440	31,320	8,143	*2
No Concrete Floor			1440	-8,856	-2,303	
			Totals:	22,464	5,840	

Notes:
ECF (RESIDENTIAL) 1.297 => TCV: 7,575
30% Completed => Est. True Cash Value 2024 =

*** Information herein deemed reliable but not guaranteed***

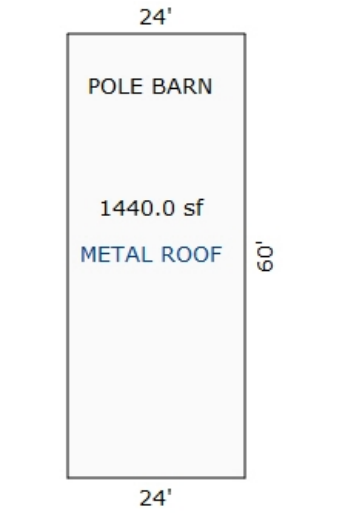

Sketch by Apex Sketch

*** Information herein deemed reliable but not guaranteed***

Parcel Number: 2410-36-3207 Jurisdiction: GREENWOOD TWP County: WEXFORD Printed on 02/15/2024

Grantor	Grantee	Sale Price	Sale Date	Inst. Type	Terms of Sale	Liber & Page	Verified By	Prcnt. Trans.
WOOD, JOE D.	WINTERS, VANCE & JODY	103,125	07/30/2021	WD	03-ARM'S LENGTH	690/2143	DEED	0.0
LINDENAU, JOE & PAMELA	WOOD, JOE & CYNTHIA	21,000	12/27/2004	WD	08-ESTATE	567:293	DEED	0.0

Property Address

5220 E 12 1/2 RD

Owner's Name/Address

WINTERS, VANCE & JODY
5220 E 12 1/2 RD
MANTON MI 49663

Tax Description

SE 1/4 OF NW 1/4 OF SW 1/4 & E 165 FT OF W 660 FT OF E 3/4 OF N 1/2 OF N 1/2 OF SW 1/4 --12.5 A. M/L-- GW. SEC. 36 T24N R10W -MANTON-

Comments/Influences

The Equalizer. Copyright (c) 1999 - 2009.
Licensed To: Township of Greenwood, County of Wexford, Michigan

Class: RESIDENTIAL-IMPROV Zoning:

School: MANTON CONSOLIDATED SCHOOLS

P.R.E. 100% 08/16/2021

:

2024 Est TCV 160,616 TCV/TFA: 143.41

Building Permit(s)	Date	Number	Status
RESIDENTIAL - REMODEL	04/12/2004	PE16007	
RESIDENTIAL - REMODEL	12/06/2000	PM4722	

X Improved | Vacant

	Public Improvements
	Dirt Road
X	Gravel Road
	Paved Road
	Storm Sewer
	Sidewalk
	Water
	Sewer
X	Electric
	Gas
	Curb
	Street Lights
	Standard Utilities
	Underground Utils.

	Topography of Site
X	Level
	Rolling
X	Low
	High
	Landscaped
	Swamp
	Wooded
	Pond
	Waterfront
	Ravine
	Wetland
	Flood Plain
X	OPEN/PINES

Who	When	What
GLA	05/11/2020	INSPECTION
GLA	07/10/2019	INSPECTION
GLA	07/10/2019	INSPECTION

Land Value Estimates for Land Table 4010.LAND VALUES

Description	Frontage	Depth	* Factors * Front	Depth	Rate	%Adj.	Reason	Value
ACREAGE			12.370 Acres		3,810	100		47,132
ROW			0.130 Acres		0	100		0
			12.50 Total Acres		Total Est. Land Value =			47,132

Year	Land Value	Building Value	Assessed Value	Board of Review	Tribunal/ Other	Taxable Value
2024	23,600	56,700	80,300			27,406C
2023	16,100	46,600	62,700			26,101C
2022	14,500	39,600	54,100			24,859C
2021	14,800	40,500	55,300		55,300W	24,065C

*** Information herein deemed reliable but not guaranteed***

Building Type

X	Single Family
	Mobile Home
	Town Home
	Duplex
	A-Frame
X	Wood Frame

Building Style: PLAIN

Yr Built	Remodeled
0	0

Condition: Good

Room List

	Basement
	1st Floor
	2nd Floor
	Bedrooms

(1) Exterior

X	Wood/Shingle
	Aluminum/Vinyl
	Brick
X	Insulation

(2) Windows

	Many		Large
X	Avg.	X	Avg.
	Few		Small

X	Wood Sash
	Metal Sash
	Vinyl Sash
	Double Hung
	Horiz. Slide
	Casement
	Double Glass
	Patio Doors
X	Storms & Screens

(3) Roof

X	Gable		Gambrel
	Hip		Mansard
	Flat		Shed

X	Asphalt Shingle

Chimney:

(3) Roof (cont.)

	Eavestrough
X	Insulation
0	Front Overhang
0	Other Overhang

(4) Interior

X	Drywall		Plaster
	Paneled		Wood T&G

Trim & Decoration

	Ex	X	Ord		Min

Size of Closets

	Lg	X	Ord		Small

Doors:		Solid	X	H.C.	

(5) Floors

Kitchen:
Other: Linoleum
Other: Carpeted

(6) Ceilings

X	Drywall		

(7) Excavation

Basement: 0 S.F.
Crawl: 1120 S.F.
Slab: 0 S.F.
Height to Joists: 0.0

(8) Basement

	Conc. Block
	Poured Conc.
	Stone
	Treated Wood
	Concrete Floor

(9) Basement Finish

	Recreation SF
	Living SF
	Walkout Doors (B)
	No Floor SF
	Walkout Doors (A)

(10) Floor Support

Joists:
Unsupported Len:
Cntr.Sup:

(11) Heating/Cooling

X	Gas		Oil		Elec.
	Wood		Coal		Steam

	Forced Air w/o Ducts
X	Forced Air w/ Ducts
	Forced Hot Water
	Electric Baseboard
	Elec. Ceil. Radiant
	Radiant (in-floor)
	Electric Wall Heat
	Space Heater
	Wall/Floor Furnace
	Forced Heat & Cool
	Heat Pump
	No Heating/Cooling

	Central Air
	Wood Furnace

(12) Electric

150	Amps Service

No./Qual. of Fixtures

	Ex.	X	Ord.		Min

No. of Elec. Outlets

	Many	X	Ave.		Few

(13) Plumbing

	Average Fixture(s)
1	3 Fixture Bath
	2 Fixture Bath
	Softener, Auto
	Softener, Manual
	Solar Water Heat
	No Plumbing
	Extra Toilet
	Extra Sink
	Separate Shower
	Ceramic Tile Floor
	Ceramic Tile Wains
	Ceramic Tub Alcove
	Vent Fan

(14) Water/Sewer

	Public Water
	Public Sewer
1	Water Well
1	1000 Gal Septic
	2000 Gal Septic

Lump Sum Items:

(15) Built-ins

	Appliance Allow.
	Cook Top
	Dishwasher
	Garbage Disposal
	Bath Heater
	Vent Fan
	Hot Tub
	Unvented Hood
	Vented Hood
	Intercom
	Jacuzzi Tub
	Jacuzzi repl.Tub
	Oven
	Microwave
	Standard Range
	Self Clean Range
	Sauna
	Trash Compactor
	Central Vacuum
	Security System

(15) Fireplaces

	Interior 1 Story
	Interior 2 Story
	2nd/Same Stack
	Two Sided
	Exterior 1 Story
	Exterior 2 Story
	Prefab 1 Story
	Prefab 2 Story
	Heat Circulator
	Raised Hearth
	Wood Stove
	Direct-Vented Gas

Class: D
Effec. Age: 49
Floor Area: 1,120
Total Base New : 176,549 E.C.F.
Total Depr Cost: 87,497 X 1.297
Estimated T.C.V: 113,484

(16) Porches/Decks

Area	Type
9	WPP
36	WGEP (1 Story)
356	Treated Wood

(17) Garage

Year Built:
Car Capacity:
Class: D
Exterior: Pole
Brick Ven.: 0
Stone Ven.: 0
Common Wall: Detache
Foundation: 18 Inch
Finished ?:
Auto. Doors: 0
Mech. Doors: 0
Area: 1200
% Good: 0
Storage Area: 0
No Conc. Floor: 0

Bsmnt Garage:

Carport Area:
Roof:

Cost Est. for Res. Bldg: 1 Single Family PLAIN Cls D Blt 0
(11) Heating System: Forced Air w/ Ducts
Ground Area = 1120 SF Floor Area = 1120 SF.
Phy/Ab.Phy/Func/Econ/Comb. % Good=51/100/100/100/51
Building Areas

Stories	Exterior	Foundation	Size	Cost New	Depr. Cost	
1 Story	Siding	Crawl Space	1,120			
			Total:	120,362	61,384	
Other Additions/Adjustments						
Water/Sewer						
1000 Gal Septic			1	4,293	2,189	
Water Well, 100 Feet			1	5,545	2,828	
Porches						
WGEP (1 Story)			36	4,482	2,286	
WPP			9	427	218	
Deck						
Treated Wood			356	5,813	2,965	
Garages						
Class: D Exterior: Pole (Unfinished)						
Base Cost			621	13,656	3,551	*2
No Concrete Floor			621	-3,484	-906	
Class: D Exterior: Pole (Unfinished)						
Base Cost			1200	23,076	11,769	
Local Cost Items						
POLE LEANTO DIRT			643	2,379	1,213	
			Totals:	176,549	87,497	

Notes:

ECF (RESIDENTIAL) 1.297 => TCV: 113,484

*** Information herein deemed reliable but not guaranteed***

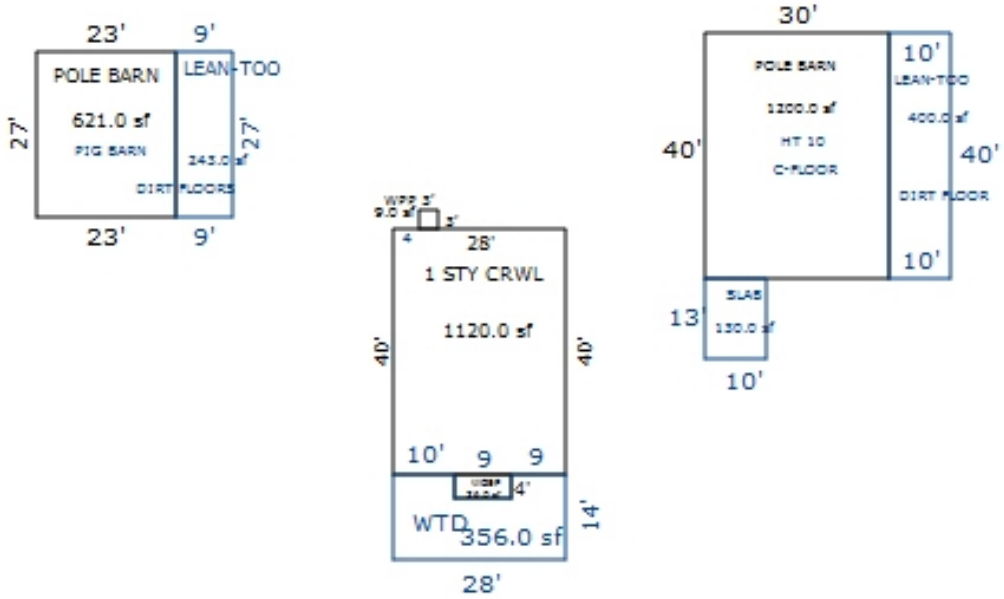

Sketch by Apex Sketch

*** Information herein deemed reliable but not guaranteed***

Parcel Number: 2410-36-3301 Jurisdiction: GREENWOOD TWP County: WEXFORD Printed on 02/15/2024

Grantor	Grantee	Sale Price	Sale Date	Inst. Type	Terms of Sale	Liber & Page	Verified By	Prcnt. Trans.
ZOCHARSKI, DENNIS & NOEL	HENRY, GEORGE & RUTH C	260,000	05/10/2002	WD	03-ARM'S LENGTH	388:525	DEED	0.0
PARKS, JOHN A. JR.	ZOCHARSKI, DENNIS & NOEL	80,000	07/05/1996	LC	03-ARM'S LENGTH	350:275	DEED	0.0

Property Address

5339 E 14 RD

Owner's Name/Address

HENRY, GEORGE J
& RUTH C
698 PINECREST DR
LEONARD MI 48367

Tax Description

S 1/2 OF SW 1/4 -78.65 A GW. SEC. 36 T24N R10W -MANTON- COMB ON 2/8/11 FROM 2410-36-3303

Comments/Influences

Class: RESIDENTIAL-IMPROV Zoning:

School: MANTON CONSOLIDATED SCHOOLS

P.R.E. 0%

:

2024 Est TCV 537,042 TCV/TFA: 162.15

Building Permit(s)	Date	Number	Status
RESIDENTIAL - REMODEL	06/02/2003	PM6744	
RESIDENTIAL - REMODEL	12/04/2002	PM6420	
RESIDENTIAL - NEW	11/19/2002	PM6376	
RESIDENTIAL - REMODEL	11/08/2002	PB11338	

X	Improved		Vacant

	Public Improvements
	Dirt Road
X	Gravel Road
	Paved Road
	Storm Sewer
	Sidewalk
	Water
	Sewer
X	Electric
	Gas
	Curb
	Street Lights
	Standard Utilities
	Underground Utils.

	Topography of Site
	Level
X	Rolling
X	Low
	High
	Landscaped
	Swamp
	Wooded
	Pond
	Waterfront
	Ravine
	Wetland
	Flood Plain
X	OPEN

Who	When	What
GLA	05/11/2020	INSPECTION
GLA	07/10/2019	INSPECTION
GLA	07/10/2019	INSPECTION

Land Value Estimates for Land Table 4010.LAND VALUES

Description	Frontage	Depth	* Factors * Front	Depth	Rate	%Adj.	Reason	Value
ACREAGE			75.650 Acres		2,558	100		193,505
ROW			3.000 Acres		0	100		0
			78.65 Total Acres				Total Est. Land Value =	193,505

Land Improvement Cost Estimates

Description	Rate	Size	% Good	Cash Value
D/W/P: 4in Concrete	6.53	720	28	1,317
Total Estimated Land Improvements True Cash Value =				1,317

Year	Land Value	Building Value	Assessed Value	Board of Review	Tribunal/ Other	Taxable Value
2024	96,800	171,700	268,500			163,739C
2023	83,600	140,100	223,700			155,942C
2022	64,300	118,200	182,500			148,517C
2021	59,200	119,500	178,700			143,773C

The Equalizer. Copyright (c) 1999 - 2009.
Licensed To: Township of Greenwood, County of Wexford, Michigan

*** Information herein deemed reliable but not guaranteed***

Building Type

X	Single Family
	Mobile Home
	Town Home
	Duplex
	A-Frame
X	Wood Frame

Building Style: TWO STORY

Yr Built	Remodeled
2003	0

Condition: Average

Room List

	Basement
	1st Floor
	2nd Floor
	Bedrooms

(1) Exterior

	Wood/Shingle
	Aluminum/Vinyl
	Brick
X	Vinyl
	Insulation

(2) Windows

X	Many		Large
	Avg.	X	Avg.
	Few		Small

	Wood Sash
	Metal Sash
X	Vinyl Sash
	Double Hung
	Horiz. Slide
	Casement
	Double Glass
	Patio Doors
X	Storms & Screens

(3) Roof

X	Gable		Gambrel
	Hip		Mansard
	Flat		Shed

X	Asphalt Shingle

Chimney: Metal

(3) Roof (cont.)

	Eavestrough
	Insulation
0	Front Overhang
0	Other Overhang

(4) Interior

	Drywall		Plaster
	Paneled		Wood T&G

Trim & Decoration

	Ex		Ord		Min

Size of Closets

	Lg		Ord		Small

Doors:		Solid		H.C.

(5) Floors

Kitchen:
Other:
Other:

(6) Ceilings

(7) Excavation

Basement: 0 S.F.
Crawl: 0 S.F.
Slab: 1656 S.F.
Height to Joists: 0.0

(8) Basement

	Conc. Block
	Poured Conc.
	Stone
	Treated Wood
	Concrete Floor

(9) Basement Finish

	Recreation SF
	Living SF
	Walkout Doors (B)
	No Floor SF
	Walkout Doors (A)

(10) Floor Support

Joists:
Unsupported Len:
Cntr.Sup:

(11) Heating/Cooling

X	Gas		Oil		Elec.
	Wood		Coal		Steam

	Forced Air w/o Ducts
X	Forced Air w/ Ducts
	Forced Hot Water
	Electric Baseboard
	Elec. Ceil. Radiant
	Radiant (in-floor)
	Electric Wall Heat
	Space Heater
	Wall/Floor Furnace
	Forced Heat & Cool
	Heat Pump
	No Heating/Cooling

	Central Air
	Wood Furnace

(12) Electric

0	Amps Service

No./Qual. of Fixtures

	Ex.		Ord.		Min

No. of Elec. Outlets

	Many		Ave.		Few

(13) Plumbing

	Average Fixture(s)
1	3 Fixture Bath
	2 Fixture Bath
	Softener, Auto
	Softener, Manual
	Solar Water Heat
	No Plumbing
	Extra Toilet
	Extra Sink
	Separate Shower
	Ceramic Tile Floor
	Ceramic Tile Wains
	Ceramic Tub Alcove
	Vent Fan

(14) Water/Sewer

	Public Water
	Public Sewer
1	Water Well
1	1000 Gal Septic
	2000 Gal Septic

Lump Sum Items:

(15) Built-ins

	Appliance Allow.
	Cook Top
	Dishwasher
	Garbage Disposal
	Bath Heater
	Vent Fan
	Hot Tub
	Unvented Hood
	Vented Hood
	Intercom
	Jacuzzi Tub
	Jacuzzi repl.Tub
	Oven
	Microwave
	Standard Range
	Self Clean Range
	Sauna
	Trash Compactor
	Central Vacuum
	Security System

(15) Fireplaces

	Interior 1 Story
	Interior 2 Story
	2nd/Same Stack
	Two Sided
	Exterior 1 Story
	Exterior 2 Story
	Prefab 1 Story
	Prefab 2 Story
	Heat Circulator
	Raised Hearth
	Wood Stove
	Direct-Vented Gas

Class: CD
Effec. Age: 21
Floor Area: 3,312
Total Base New : 347,164 E.C.F.
Total Depr Cost: 263,855 X 1.297
Estimated T.C.V: 342,220

(16) Porches/Decks

Area	Type
384	Treated Wood
660	Treated Wood
900	Treated Wood

(17) Garage

Year Built:
Car Capacity:
Class:
Exterior:
Brick Ven.:
Stone Ven.:
Common Wall:
Foundation:
Finished ?:
Auto. Doors:
Mech. Doors:
Area:
% Good:
Storage Area:
No Conc. Floor:

Bsmnt Garage: 2 Car

Carport Area:
Roof:

Cost Est. for Res. Bldg: 1 Single Family TWO STORY Cls CD Blt 2003
(11) Heating System: Forced Air w/ Ducts
Ground Area = 1656 SF Floor Area = 3312 SF.
Phy/Ab.Phy/Func/Econ/Comb. % Good=79/100/100/100/79
Building Areas

Stories	Exterior	Foundation	Size	Cost New	Depr. Cost	
2 Story	Siding	Slab	1,656			
			Total:	306,766	242,346	
Other Additions/Adjustments						
Water/Sewer						
1000 Gal Septic			1	4,582	3,620	
Water Well, 100 Feet			1	5,680	4,487	
Deck						
Treated Wood			384	6,255	4,941	
Treated Wood			660	8,910	2,495	*2
Treated Wood			900	11,493	3,218	*2
Garages						
Class: CD Exterior: Siding Foundation: 42 Inch (Unfinished)						
Basement Garage: 2 Car			1	3,478	2,748	
			Totals:	347,164	263,855	

Notes:
ECF (RESIDENTIAL) 1.297 => TCV: 342,220

*** Information herein deemed reliable but not guaranteed***

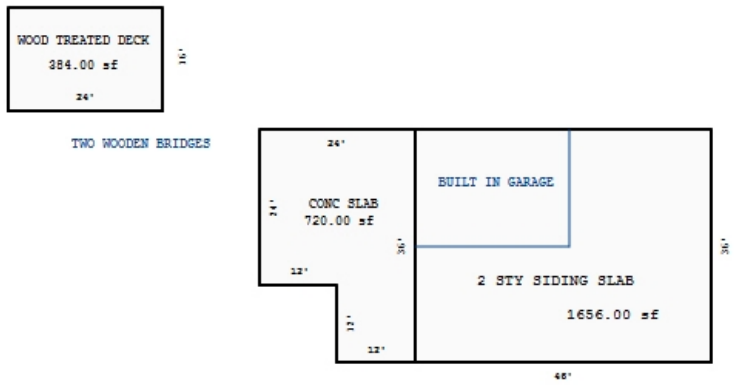

Sketch by Apex Sketch

*** Information herein deemed reliable but not guaranteed***

Parcel Number: 2410-36-4101 Jurisdiction: GREENWOOD TWP County: WEXFORD Printed on 02/15/2024

Grantor	Grantee	Sale Price	Sale Date	Inst. Type	Terms of Sale	Liber & Page	Verified By	Prcnt. Trans.
MILLER, JEFFREY & MARTHA A	STOLTZFUS, MATTHEW LEE & F	180,000	03/01/2023	WD	03-ARM'S LENGTH	694/2718	PROPERTY TRANSFER	100.0
MILLER, JEFFREY	MILLER, JEFFREY & MARTHA A	0	01/26/2017	QC	21-NOT USED/OTHER	679/1941	DEED	0.0
COX, MARY LE ETAL	MILLER, JEFFREY	120,000	05/12/2008	WD	03-ARM'S LENGTH	614/1343	DEED	100.0

Property Address

6301 N 37 RD

Owner's Name/Address

STOLTZFUS, MATTHEW LEE & ROSE MARIE
6301 N 37 RD
MANTON MI 49663

Tax Description

NE 1/4 OF SE 1/4 40 A. GW. SEC. 36 T24N R10W -MANTON-

Comments/Influences

Class: RESIDENTIAL-IMPROV Zoning:

School: MANTON CONSOLIDATED SCHOOLS

P.R.E. 0%

:

2024 Est TCV 225,368 TCV/TFA: 213.42

Building Permit(s)	Date	Number	Status
Res. New Construction	08/23/2023	PB23-0224	COMPLETE

X Improved | Vacant

	Public Improvements
	Dirt Road
X	Gravel Road
	Paved Road
	Storm Sewer
	Sidewalk
	Water
	Sewer
X	Electric
	Gas
	Curb
	Street Lights
	Standard Utilities
	Underground Utils.

	Topography of Site
	Level
X	Rolling
X	Low
	High
	Landscaped
	Swamp
	Wooded
	Pond
	Waterfront
	Ravine
	Wetland
	Flood Plain
X	OPEN

Land Value Estimates for Land Table 4010.LAND VALUES

Description	Frontage	Depth	* Factors * Front	Depth	Rate	%Adj.	Reason	Value
ACREAGE			38.000 Acres		2,722	100		103,436
ROW			2.000 Acres		0	100		0
			40.00 Total Acres		Total Est. Land Value =			103,436

Year	Land Value	Building Value	Assessed Value	Board of Review	Tribunal/ Other	Taxable Value
2024	51,700	61,000	112,700			112,700S
2023	45,900	54,900	100,800			62,177C
2022	36,700	46,800	83,500			59,217C
2021	32,600	47,700	80,300			57,326C

Who	When	What
GLA	05/11/2020	INSPECTION
GLA	07/10/2019	INSPECTION
GLA	07/10/2019	INSPECTION

The Equalizer. Copyright (c) 1999 - 2009.
Licensed To: Township of Greenwood, County of Wexford, Michigan

*** Information herein deemed reliable but not guaranteed***

Building Type

X	Single Family
	Mobile Home
	Town Home
	Duplex
	A-Frame
X	Wood Frame

Building Style: RANCH

Yr Built	Remodeled
1975	0

Condition: Fair

Room List

	Basement
	1st Floor
	2nd Floor
	Bedrooms

(1) Exterior

	Wood/Shingle
	Aluminum/Vinyl
	Brick
X	Aluminum
	Insulation

(2) Windows

X	Many		Large
	Avg.	X	Avg.
	Few		Small

X	Wood Sash
X	Metal Sash
	Vinyl Sash
X	Double Hung
	Horiz. Slide
	Casement
	Double Glass
	Patio Doors
X	Storms & Screens

(3) Roof

X	Gable		Gambrel
	Hip		Mansard
	Flat		Shed

X	Asphalt Shingle

Chimney: Metal

(3) Roof (cont.)

	Eavestrough
	Insulation
0	Front Overhang
0	Other Overhang

(4) Interior

	Drywall		Plaster
	Paneled		Wood T&G

Trim & Decoration

	Ex	X	Ord		Min

Size of Closets

	Lg	X	Ord		Small

Doors:		Solid	X	H.C.	

(5) Floors

Kitchen:
Other:
Other:

(6) Ceilings

(7) Excavation

Basement: 0 S.F.
Crawl: 1056 S.F.
Slab: 0 S.F.
Height to Joists: 0.0

(8) Basement

	Conc. Block
	Poured Conc.
	Stone
	Treated Wood
	Concrete Floor

(9) Basement Finish

	Recreation SF
	Living SF
	Walkout Doors (B)
	No Floor SF
	Walkout Doors (A)

(10) Floor Support

Joists:
Unsupported Len:
Cntr.Sup:

(11) Heating/Cooling

X	Gas		Oil		Elec.
	Wood		Coal		Steam

	Forced Air w/o Ducts
X	Forced Air w/ Ducts
	Forced Hot Water
	Electric Baseboard
	Elec. Ceil. Radiant
	Radiant (in-floor)
	Electric Wall Heat
	Space Heater
	Wall/Floor Furnace
	Forced Heat & Cool
	Heat Pump
	No Heating/Cooling

	Central Air
	Wood Furnace

(12) Electric

0	Amps Service

No./Qual. of Fixtures

	Ex.	X	Ord.		Min

No. of Elec. Outlets

	Many	X	Ave.		Few

(13) Plumbing

1	Average Fixture(s)
	3 Fixture Bath
	2 Fixture Bath
	Softener, Auto
	Softener, Manual
	Solar Water Heat
	No Plumbing
	Extra Toilet
	Extra Sink
	Separate Shower
	Ceramic Tile Floor
	Ceramic Tile Wains
	Ceramic Tub Alcove
	Vent Fan

(14) Water/Sewer

	Public Water
	Public Sewer
1	Water Well
1	1000 Gal Septic
	2000 Gal Septic

Lump Sum Items:

(15) Built-ins

	Appliance Allow.
	Cook Top
	Dishwasher
	Garbage Disposal
	Bath Heater
	Vent Fan
	Hot Tub
	Unvented Hood
	Vented Hood
	Intercom
	Jacuzzi Tub
	Jacuzzi repl.Tub
	Oven
	Microwave
	Standard Range
	Self Clean Range
	Sauna
	Trash Compactor
	Central Vacuum
	Security System

(15) Fireplaces

	Interior 1 Story
	Interior 2 Story
	2nd/Same Stack
	Two Sided
	Exterior 1 Story
	Exterior 2 Story
	Prefab 1 Story
	Prefab 2 Story
	Heat Circulator
	Raised Hearth
	Wood Stove
	Direct-Vented Gas

Class: D
Effec. Age: 49
Floor Area: 1,056
Total Base New : 183,988 E.C.F.
Total Depr Cost: 94,011 X 1.297
Estimated T.C.V: 121,932

(16) Porches/Decks

Area	Type
32	CPP
270	CCP (1 Story)
240	Brzwy, FW

(17) Garage

Year Built:
Car Capacity:
Class: D
Exterior: Siding
Brick Ven.: 0
Stone Ven.: 0
Common Wall: 1 Wall
Foundation: 18 Inch
Finished ?:
Auto. Doors: 0
Mech. Doors: 0
Area: 720
% Good: 0
Storage Area: 0
No Conc. Floor: 0

Bsmnt Garage:

Carport Area:
Roof:

Cost Est. for Res. Bldg: 1 Single Family RANCH Cls D Blt 1975
(11) Heating System: Forced Air w/ Ducts
Ground Area = 1056 SF Floor Area = 1056 SF.
Phy/Ab.Phy/Func/Econ/Comb. % Good=51/100/100/100/51
Building Areas

Stories	Exterior	Foundation	Size	Cost New	Depr. Cost	
1 Story	Siding	Crawl Space	1,056			
			Total:	114,695	58,494	
Other Additions/Adjustments						
Water/Sewer						
1000 Gal Septic			1	4,293	2,189	
Water Well, 100 Feet			1	5,545	2,828	
Porches						
CPP			32	785	400	
CCP (1 Story)			270	5,651	2,882	
Garages						
Class: D Exterior: Siding Foundation: 18 Inch (Unfinished)						
Base Cost			720	20,484	10,447	
Common Wall: 1 Wall			1	-1,857	-947	
Class: D Exterior: Pole (Unfinished)						
Base Cost			1200	23,076	11,769	
No Concrete Floor			1200	-6,732	-3,433	
Breezeways						
Frame Wall			240	12,804	6,530	
Local Cost Items						
POLE LEANTO DIRT			456	1,687	860	
SHED			456	3,557	1,992	*5
			Totals:	183,988	94,011	

Notes:
ECF (RESIDENTIAL) 1.297 => TCV: 121,932

*** Information herein deemed reliable but not guaranteed***

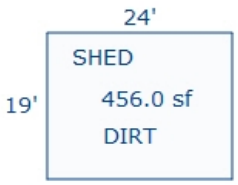

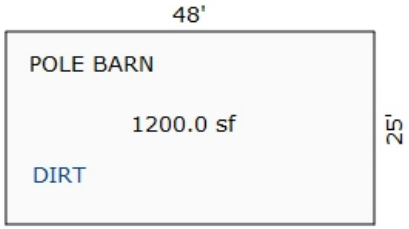

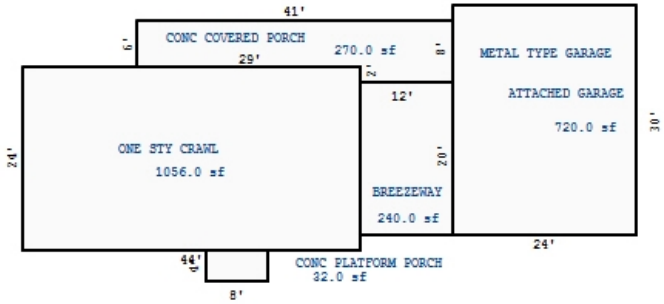

Sketch by Apex Sketch

*** Information herein deemed reliable but not guaranteed***

Parcel Number: 2410-36-4201 Jurisdiction: GREENWOOD TWP County: WEXFORD Printed on 02/15/2024

Grantor	Grantee	Sale Price	Sale Date	Inst. Type	Terms of Sale	Liber & Page	Verified By	Prcnt. Trans.
EMERALD CHRISTMAS TREE	KEIM NICHOLAS D & JOEL D	105,000	12/08/2023	WD	03-ARM'S LENGTH	696-1679	PROPERTY TRANSFER	100.0

Property Address

Owner's Name/Address

KEIM NICHOLAS D & JOEL D
6215 N 37 RD
MANTON MI 49663

Tax Description

NW 1/4 OF SE 1/4 40 A. GW. SEC. 36 T24N R10W -MANTON-

Comments/Influences

Class: RESIDENTIAL-VACANT Zoning:

School: MANTON CONSOLIDATED SCHOOLS

P.R.E. 0%

:

2024 Est TCV 106,158

Building Permit(s)	Date	Number	Status

	Improved	X	Vacant

	Public Improvements
X	Dirt Road
	Gravel Road
	Paved Road
	Storm Sewer
	Sidewalk
	Water
	Sewer
X	Electric
	Gas
	Curb
	Street Lights
	Standard Utilities
	Underground Utils.

	Topography of Site
	Level
X	Rolling
	Low
X	High
	Landscaped
	Swamp
	Wooded
	Pond
	Waterfront
	Ravine
	Wetland
	Flood Plain
X	OPEN/PINES

Who	When	What
GLA	05/11/2020	INSPECTION
GLA	07/10/2019	INSPECTION
GLA	07/10/2019	INSPECTION

Land Value Estimates for Land Table 4010.LAND VALUES

Description	Frontage	Depth	* Factors * Front	Depth	Rate	%Adj.	Reason	Value
ACREAGE			39.000 Acres		2,722	100		106,158
ROW			1.000 Acres		0	100		0
			40.00 Total Acres		Total Est. Land Value =			106,158

Year	Land Value	Building Value	Assessed Value	Board of Review	Tribunal/ Other	Taxable Value
2024	53,100	0	53,100			53,100S
2023	47,000	0	47,000			16,815C
2022	37,400	0	37,400			16,015C
2021	33,300	0	33,300			15,504C

The Equalizer. Copyright (c) 1999 - 2009.
Licensed To: Township of Greenwood, County of Wexford, Michigan

*** Information herein deemed reliable but not guaranteed***

Parcel Number: 2410-36-4301 Jurisdiction: GREENWOOD TWP County: WEXFORD Printed on 02/15/2024

Grantor	Grantee	Sale Price	Sale Date	Inst. Type	Terms of Sale	Liber & Page	Verified By	Prcnt. Trans.
HOOKER, CECIL W.	MAES, WILLIS	13,000	05/19/1995	LC	03-ARM'S LENGTH	344:197	DEED	0.0

Property Address	Class: RESIDENTIAL-IMPROV	Zoning:	Building Permit(s)	Date	Number	Status
5525 E 14 RD	School: MANTON CONSOLIDATED SCHOOLS		RESIDENTIAL - REMODEL	10/06/2000	PM4513	
	P.R.E. 100% / /					
Owner's Name/Address	:					
MAES, STEPHEN WILLIS & KATHY ANN 5525 E 14 RD MANTON MI 49663	2024 Est TCV 244,893 TCV/TFA: 242.95					

X Improved | Vacant

Land Value Estimates for Land Table 4010.LAND VALUES

Description	Frontage	Depth	Front	Depth	Rate	%Adj.	Reason	Value
			* Factors *					
ACREAGE			19.510	Acres	3,200	100		62,432
ROW			0.490	Acres	0	100		0
			20.00	Total Acres			Total Est. Land Value =	62,432

Tax Description

W 1/2 OF SW 1/4 OF SE 1/4 20 A. GW. SEC. 36 T24N R10W -MANTON-

Comments/Influences

The Equalizer. Copyright (c) 1999 - 2009. Licensed To: Township of Greenwood, County of Wexford, Michigan

Public Improvements

	Dirt Road
X	Gravel Road
	Paved Road
	Storm Sewer
	Sidewalk
	Water
	Sewer
X	Electric
	Gas
	Curb
	Street Lights
	Standard Utilities
	Underground Utils.

Topography of Site

	Level
X	Rolling
X	Low
	High
	Landscaped
	Swamp
	Wooded
	Pond
	Waterfront
	Ravine
	Wetland
	Flood Plain
X	OPEN

Who	When	What
GLA	05/11/2020	INSPECTION
GLA	07/10/2019	INSPECTION
GLA	07/10/2019	INSPECTION

Year	Land Value	Building Value	Assessed Value	Board of Review	Tribunal/ Other	Taxable Value
2024	31,200	91,200	122,400			45,762C
2023	25,400	74,700	100,100			43,583C
2022	21,500	63,400	84,900			41,508C
2021	19,800	64,400	84,200			40,182C

*** Information herein deemed reliable but not guaranteed***

Building Type

X	Single Family
	Mobile Home
	Town Home
	Duplex
	A-Frame
X	Wood Frame

Building Style: PLAIN

Yr Built	Remodeled
1997	0

Condition: Good

Room List

	Basement
	1st Floor
	2nd Floor
	Bedrooms

(1) Exterior

	Wood/Shingle
X	Aluminum/Vinyl
	Brick
X	Insulation

(2) Windows

X	Many Avg. Few	X	Large Avg. Small

	Wood Sash
	Metal Sash
X	Vinyl Sash
	Double Hung
	Horiz. Slide
	Casement
	Double Glass
	Patio Doors
X	Storms & Screens

(3) Roof

X	Gable		Gambrel
	Hip		Mansard
	Flat		Shed

X	Asphalt Shingle

Chimney:

(3) Roof (cont.)

	Eavestrough
X	Insulation
0	Front Overhang
0	Other Overhang

(4) Interior

X	Drywall Paneled		Plaster Wood T&G

Trim & Decoration

	Ex	X	Ord		Min

Size of Closets

	Lg	X	Ord		Small

Doors: | | Solid | X | H.C.

(5) Floors

Kitchen:
Other: Linoleum
Other: Carpeted

(6) Ceilings

X	Drywall

(7) Excavation

Basement: 1008 S.F.
Crawl: 0 S.F.
Slab: 0 S.F.
Height to Joists: 0.0

(8) Basement

	Conc. Block
	Poured Conc.
	Stone
	Treated Wood
	Concrete Floor

(9) Basement Finish

	Recreation	SF
	Living	SF
1	Walkout Doors	(B)
	No Floor	SF
	Walkout Doors	(A)

(10) Floor Support

Joists:
Unsupported Len:
Cntr.Sup:

(11) Heating/Cooling

X	Gas		Oil		Elec.
	Wood		Coal		Steam

	Forced Air w/o Ducts
X	Forced Air w/ Ducts
	Forced Hot Water
	Electric Baseboard
	Elec. Ceil. Radiant
	Radiant (in-floor)
	Electric Wall Heat
	Space Heater
	Wall/Floor Furnace
	Forced Heat & Cool
	Heat Pump
	No Heating/Cooling

	Central Air
	Wood Furnace

(12) Electric

150	Amps Service

No./Qual. of Fixtures

	Ex.	X	Ord.		Min

No. of Elec. Outlets

	Many	X	Ave.		Few

(13) Plumbing

	Average Fixture(s)
1	3 Fixture Bath
	2 Fixture Bath
	Softener, Auto
	Softener, Manual
	Solar Water Heat
	No Plumbing
	Extra Toilet
	Extra Sink
	Separate Shower
	Ceramic Tile Floor
	Ceramic Tile Wains
	Ceramic Tub Alcove
	Vent Fan

(14) Water/Sewer

	Public Water
	Public Sewer
1	Water Well
1	1000 Gal Septic
	2000 Gal Septic

Lump Sum Items:

(15) Built-ins

	Appliance Allow.
	Cook Top
	Dishwasher
	Garbage Disposal
	Bath Heater
	Vent Fan
	Hot Tub
	Unvented Hood
	Vented Hood
	Intercom
	Jacuzzi Tub
	Jacuzzi repl.Tub
	Oven
	Microwave
	Standard Range
	Self Clean Range
	Sauna
	Trash Compactor
	Central Vacuum
	Security System

(15) Fireplaces

	Interior 1 Story
	Interior 2 Story
	2nd/Same Stack
	Two Sided
	Exterior 1 Story
	Exterior 2 Story
	Prefab 1 Story
	Prefab 2 Story
	Heat Circulator
	Raised Hearth
	Wood Stove
	Direct-Vented Gas

Class: CD
Effec. Age: 27
Floor Area: 1,008
Total Base New : 193,889 E.C.F.
Total Depr Cost: 140,679 X 1.297
Estimated T.C.V: 182,461

(16) Porches/Decks

Area	Type
60	WPP
72	WPP
16	WPP
72	4in Concrete
96	WPP
458	Treated Wood

(17) Garage

Year Built:
Car Capacity:
Class: D
Exterior: Pole
Brick Ven.: 0
Stone Ven.: 0
Common Wall: Detache
Foundation: 18 Inch
Finished ?:
Auto. Doors: 0
Mech. Doors: 0
Area: 960
% Good: 0
Storage Area: 0
No Conc. Floor: 0

Bsmnt Garage:

Carport Area:
Roof:

Cost Est. for Res. Bldg: 1 Single Family PLAIN Cls CD Blt 1997
(11) Heating System: Forced Air w/ Ducts
Ground Area = 1008 SF Floor Area = 1008 SF.
Phy/Ab.Phy/Func/Econ/Comb. % Good=73/100/100/100/73
Building Areas

Stories	Exterior	Foundation	Size	Cost New	Depr. Cost	
1 Story	Siding	Basement	1,008			
			Total:	136,835	99,889	
Other Additions/Adjustments						
Basement, Outside Entrance, Below Grade			1	2,176	1,588	
Water/Sewer						
1000 Gal Septic			1	4,582	3,345	
Water Well, 100 Feet			1	5,680	4,146	
Porches						
WPP			60	2,092	1,527	
WPP			72	2,315	1,690	
WPP			96	2,567	1,874	
WPP			16	805	588	
4in Concrete			72	533	389	
Deck						
Treated Wood			458	7,012	5,119	
Garages						
Class: D Exterior: Pole (Unfinished)						
Base Cost			960	19,334	14,114	
Local Cost Items						
POLE LEANTO DIRT			480	1,776	1,296	
SHED			408	3,182	1,464	*4
OUTSIDE FURNACE			1	5,000	3,650	
			Totals:	193,889	140,679	

Notes:
ECF (RESIDENTIAL) 1.297 => TCV: 182,461

*** Information herein deemed reliable but not guaranteed***

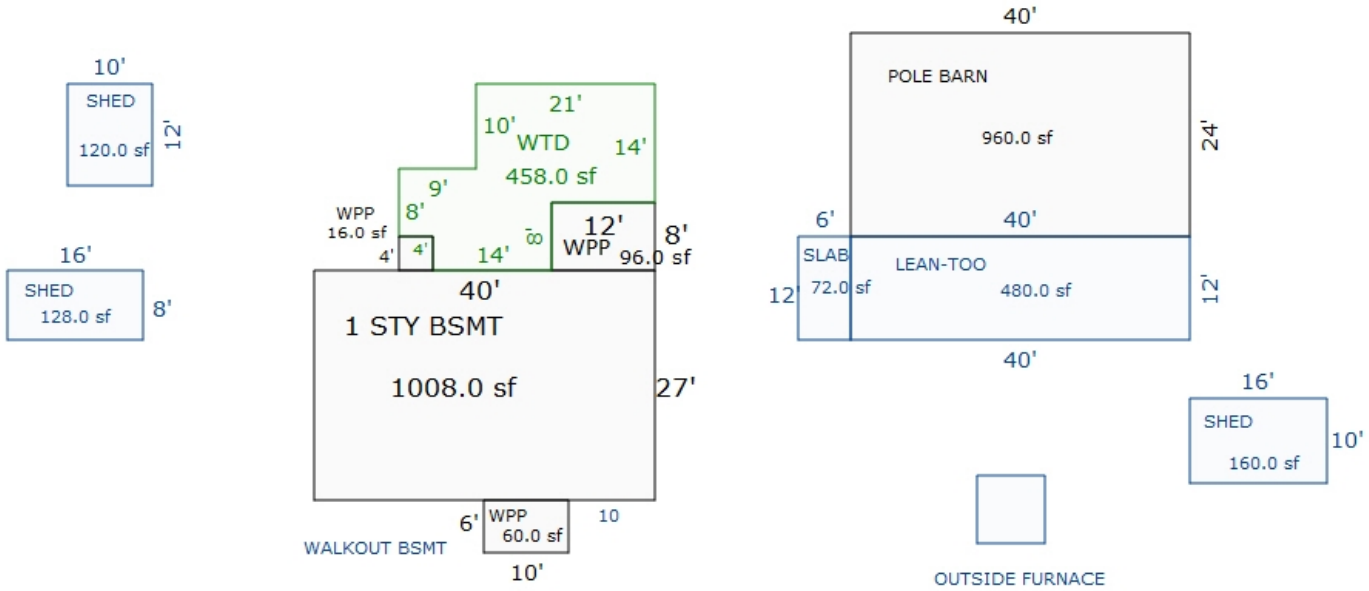

Sketch by Apex Sketch

*** Information herein deemed reliable but not guaranteed***

Parcel Number: 2410-36-4302 Jurisdiction: GREENWOOD TWP County: WEXFORD Printed on 02/15/2024

Grantor	Grantee	Sale Price	Sale Date	Inst. Type	Terms of Sale	Liber & Page	Verified By	Prcnt. Trans.
ARAUJO, ALBERT J.	ARAUJO, ALBERT J JR & SHIF	0	10/12/2022	QC	18-LIFE ESTATE	COPY OF DEED	DEED	0.0

Property Address

Owner's Name/Address

ARAUJO, ALBERT J JR & SHIRLEY J LE
P.O. BOX 495
MANTON MI 49663

Tax Description

E 1/2 OF SW 1/4 OF SE 1/4 20 A. M/L GW. SEC. 36 T24N R100W -MANTON-

Comments/Influences

The Equalizer. Copyright (c) 1999 - 2009. Licensed To: Township of Greenwood, County of Wexford, Michigan

Class: RESIDENTIAL-VACANT Zoning:

School: MANTON CONSOLIDATED SCHOOLS

P.R.E. 0%

:

2024 Est TCV 62,432

	Improved	X	Vacant

	Public Improvements
X	Dirt Road
X	Gravel Road
	Paved Road
	Storm Sewer
	Sidewalk
	Water
	Sewer
X	Electric
	Gas
	Curb
	Street Lights
	Standard Utilities
	Underground Utils.

	Topography of Site
X	Level
X	Rolling
	Low
	High
	Landscaped
	Swamp
	Wooded
	Pond
	Waterfront
	Ravine
	Wetland
	Flood Plain
X	OPEN

Who	When	What
GLA	05/11/2020	INSPECTION
GLA	07/10/2019	INSPECTION

Building Permit(s)	Date	Number	Status

Land Value Estimates for Land Table 4010.LAND VALUES

Description	Frontage	Depth	* Factors * Front	Depth	Rate	%Adj.	Reason	Value
ACREAGE			19.510 Acres		3,200	100		62,432
ROW			0.490 Acres		0	100		0
			20.00 Total Acres		Total Est. Land Value =			62,432

Year	Land Value	Building Value	Assessed Value	Board of Review	Tribunal/ Other	Taxable Value
2024	31,200	0	31,200			8,910C
2023	25,400	0	25,400			8,486C
2022	21,500	0	21,500			8,082C
2021	19,800	0	19,800			7,824C

*** Information herein deemed reliable but not guaranteed***

Parcel Number: 2410-36-4401 Jurisdiction: GREENWOOD TWP County: WEXFORD Printed on 02/15/2024

Grantor	Grantee	Sale Price	Sale Date	Inst. Type	Terms of Sale	Liber & Page	Verified By	Prcnt. Trans.
KIDD, JOHN F.	KEIM, DUANE & RUTH ANN	31,000	01/05/1999	WD	03-ARM'S LENGTH	365:384	DEED	0.0
HOOKER, CECIL W.	KIDD ET AL, JOHN F.	18,000	05/30/1995	LC	03-ARM'S LENGTH	344:324	DEED	0.0

Property Address

6215 N 37 RD

Owner's Name/Address

KEIM, DUANE R
& RUTH ANN
6215 N 37 RD
MANTON MI 49663

Tax Description

SE 1/4 OF SE 1/4 EXC PAR COM AT SE COR: TH W 650.74 FT; N 656.54 FT; E 649.36 FT; S 655.57 FT TO POB. --30.31 A. M/L GW. SEC. 36 T24N R10W -MANTON-

Comments/Influences

The Equalizer. Copyright (c) 1999 - 2009. Licensed To: Township of Greenwood, County of Wexford, Michigan

Class: RESIDENTIAL-IMPROV Zoning:

School: MANTON CONSOLIDATED SCHOOLS

P.R.E. 100% / /

:

2024 Est TCV 261,089 TCV/TFA: 223.15

Building Permit(s)	Date	Number	Status

X	Improved		Vacant

	Public Improvements
	Dirt Road
X	Gravel Road
	Paved Road
	Storm Sewer
	Sidewalk
	Water
	Sewer
X	Electric
	Gas
	Curb
	Street Lights
	Standard Utilities
	Underground Utils.

	Topography of Site
	Level
X	Rolling
	Low
	High
	Landscaped
	Swamp
	Wooded
	Pond
	Waterfront
	Ravine
	Wetland
	Flood Plain
X	OPEN

Who	When	What
GLA	05/11/2020	INSPECTION
GLA	07/10/2019	INSPECTION
GLA	08/07/2014	INSPECTION

Land Value Estimates for Land Table 4010.LAND VALUES

Description	Frontage	Depth	* Factors * Front	Depth	Rate	%Adj.	Reason	Value
	990.00	0.00	1.0000	1.0000	0	100		0
ACREAGE			29.310 Acres		2,722	100		79,782
ROW			1.000 Acres		0	100		0

990 Actual Front Feet, 30.31 Total Acres Total Est. Land Value = 79,782

Land Improvement Cost Estimates

Description	Rate	Size	% Good	Cash Value
Wood Frame	19.95	192	54	2,068
Wood Frame	22.55	114	54	1,388
Total Estimated Land Improvements True Cash Value =				3,456

Year	Land Value	Building Value	Assessed Value	Board of Review	Tribunal/ Other	Taxable Value
2024	39,900	90,600	130,500			75,959C
2023	36,600	74,800	111,400			72,342C
2022	32,900	63,700	96,600			68,898C
2021	28,700	64,700	93,400			66,697C

*** Information herein deemed reliable but not guaranteed***

Building Type

X	Single Family
	Mobile Home
	Town Home
	Duplex
	A-Frame
X	Wood Frame

Building Style: PLAIN

Yr Built	Remodeled
0	0

Condition: Good

Room List

	Basement
	1st Floor
	2nd Floor
	Bedrooms

(1) Exterior

	Wood/Shingle
X	Aluminum/Vinyl
	Brick
X	Insulation

(2) Windows

X	Many		Large
	Avg.	X	Avg.
	Few		Small

	Wood Sash
	Metal Sash
X	Vinyl Sash
	Double Hung
	Horiz. Slide
	Casement
	Double Glass
	Patio Doors
X	Storms & Screens

(3) Roof

X	Gable		Gambrel
	Hip		Mansard
	Flat		Shed

X	Asphalt Shingle

Chimney:

(3) Roof (cont.)

	Eavestrough
X	Insulation
0	Front Overhang
0	Other Overhang

(4) Interior

X	Drywall		Plaster
	Paneled		Wood T&G

Trim & Decoration

	Ex	X	Ord		Min

Size of Closets

	Lg	X	Ord		Small

Doors:		Solid	X	H.C.	

(5) Floors

Kitchen:
Other: Linoleum
Other: Carpeted

(6) Ceilings

X	Drywall		

(7) Excavation

Basement: 1170 S.F.
Crawl: 0 S.F.
Slab: 0 S.F.
Height to Joists: 0.0

(8) Basement

	Conc. Block
	Poured Conc.
	Stone
	Treated Wood
	Concrete Floor

(9) Basement Finish

	Recreation SF
	Living SF
	Walkout Doors (B)
	No Floor SF
	Walkout Doors (A)

(10) Floor Support

Joists:
Unsupported Len:
Cntr.Sup:

(11) Heating/Cooling

X	Gas		Oil		Elec.
	Wood		Coal		Steam

	Forced Air w/o Ducts
X	Forced Air w/ Ducts
	Forced Hot Water
	Electric Baseboard
	Elec. Ceil. Radiant
	Radiant (in-floor)
	Electric Wall Heat
	Space Heater
	Wall/Floor Furnace
	Forced Heat & Cool
	Heat Pump
	No Heating/Cooling

	Central Air
	Wood Furnace

(12) Electric

150	Amps Service

No./Qual. of Fixtures

	Ex.	X	Ord.		Min

No. of Elec. Outlets

	Many	X	Ave.		Few

(13) Plumbing

1	Average Fixture(s)
	3 Fixture Bath
	2 Fixture Bath
	Softener, Auto
	Softener, Manual
	Solar Water Heat
	No Plumbing
	Extra Toilet
	Extra Sink
	Separate Shower
	Ceramic Tile Floor
	Ceramic Tile Wains
	Ceramic Tub Alcove
	Vent Fan

(14) Water/Sewer

	Public Water
	Public Sewer
1	Water Well
1	1000 Gal Septic
	2000 Gal Septic

Lump Sum Items:

(15) Built-ins

	Appliance Allow.
	Cook Top
	Dishwasher
	Garbage Disposal
	Bath Heater
	Vent Fan
	Hot Tub
	Unvented Hood
	Vented Hood
	Intercom
	Jacuzzi Tub
	Jacuzzi repl.Tub
	Oven
	Microwave
	Standard Range
	Self Clean Range
	Sauna
	Trash Compactor
	Central Vacuum
	Security System

(15) Fireplaces

	Interior 1 Story
	Interior 2 Story
	2nd/Same Stack
	Two Sided
	Exterior 1 Story
	Exterior 2 Story
	Prefab 1 Story
	Prefab 2 Story
	Heat Circulator
	Raised Hearth
	Wood Stove
	Direct-Vented Gas

Class: D
Effec. Age: 46
Floor Area: 1,170
Total Base New : 213,975 E.C.F.
Total Depr Cost: 115,547 X 1.297
Estimated T.C.V: 149,864

(16) Porches/Decks

Area	Type

(17) Garage

Year Built:
Car Capacity:
Class: D
Exterior: Pole
Brick Ven.: 0
Stone Ven.: 0
Common Wall: Detache
Foundation: 18 Inch
Finished ?:
Auto. Doors: 0
Mech. Doors: 0
Area: 832
% Good: 0
Storage Area: 0
No Conc. Floor: 0

Bsmnt Garage:

Carport Area:
Roof:

Cost Est. for Res. Bldg: 1 Single Family PLAIN Cls D Blt 0
(11) Heating System: Forced Air w/ Ducts
Ground Area = 1170 SF Floor Area = 1170 SF.
Phy/Ab.Phy/Func/Econ/Comb. % Good=54/100/100/100/54
Building Areas

Stories	Exterior	Foundation	Size	Cost New	Depr. Cost
1+ Story	Siding	Basement	1,170		
			Total:	145,873	78,772
Other Additions/Adjustments					
Water/Sewer					
1000 Gal Septic			1	4,293	2,318
Water Well, 100 Feet			1	5,545	2,994
Garages					
Class: D Exterior: Pole (Unfinished)					
Base Cost			832	17,189	9,282
Class: D Exterior: Pole (Unfinished)					
Base Cost			420	10,307	5,566
Class: D Exterior: Pole (Unfinished)					
Base Cost			1600	30,768	16,615
			Totals:	213,975	115,547

Notes:
ECF (RESIDENTIAL) 1.297 => TCV: 149,864

*** Information herein deemed reliable but not guaranteed***

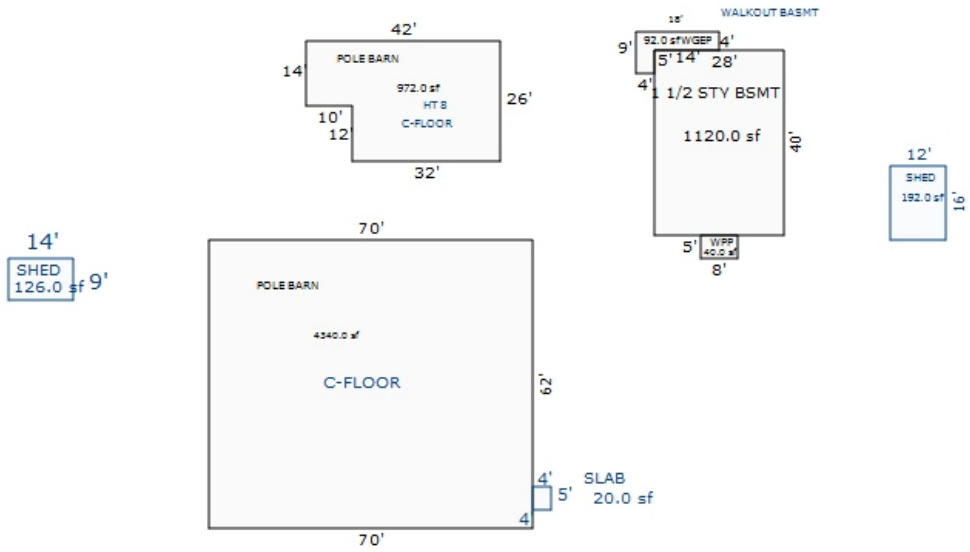

Sketch by Apex Sketch

*** Information herein deemed reliable but not guaranteed***

Building Type

X	Single Family
	Mobile Home
	Town Home
	Duplex
	A-Frame
X	Wood Frame

Building Style: PLAIN

Yr Built	Remodeled
0	0

Condition: Good

Room List

	Basement
	1st Floor
	2nd Floor
	Bedrooms

(1) Exterior

	Wood/Shingle
X	Aluminum/Vinyl
	Brick
X	Insulation

(2) Windows

	Many		Large
X	Avg.	X	Avg.
	Few		Small

	Wood Sash
	Metal Sash
X	Vinyl Sash
	Double Hung
	Horiz. Slide
	Casement
	Double Glass
	Patio Doors
X	Storms & Screens

(3) Roof

X	Gable		Gambrel
	Hip		Mansard
	Flat		Shed

X	Asphalt Shingle

Chimney:

(3) Roof (cont.)

	Eavestrough
X	Insulation
0	Front Overhang
0	Other Overhang

(4) Interior

X	Drywall		Plaster
	Paneled		Wood T&G

Trim & Decoration

	Ex	X	Ord		Min

Size of Closets

	Lg	X	Ord		Small

Doors:		Solid	X	H.C.	

(5) Floors

Kitchen:
Other: Linoleum
Other: Carpeted

(6) Ceilings

X	Drywall

(7) Excavation

Basement: 0 S.F.
Crawl: 0 S.F.
Slab: 0 S.F.
Height to Joists: 0.0

(8) Basement

	Conc. Block
	Poured Conc.
	Stone
	Treated Wood
	Concrete Floor

(9) Basement Finish

	Recreation SF
	Living SF
	Walkout Doors (B)
	No Floor SF
	Walkout Doors (A)

(10) Floor Support

Joists:
Unsupported Len:
Cntr.Sup:

(11) Heating/Cooling

X	Gas		Oil		Elec.
	Wood		Coal		Steam

	Forced Air w/o Ducts
X	Forced Air w/ Ducts
	Forced Hot Water
	Electric Baseboard
	Elec. Ceil. Radiant
	Radiant (in-floor)
	Electric Wall Heat
	Space Heater
	Wall/Floor Furnace
	Forced Heat & Cool
	Heat Pump
	No Heating/Cooling

	Central Air
	Wood Furnace

(12) Electric

150	Amps Service

No./Qual. of Fixtures

	Ex.	X	Ord.		Min

No. of Elec. Outlets

	Many	X	Ave.		Few

(13) Plumbing

1	Average Fixture(s)
	3 Fixture Bath
	2 Fixture Bath
	Softener, Auto
	Softener, Manual
	Solar Water Heat
	No Plumbing
	Extra Toilet
	Extra Sink
	Separate Shower
	Ceramic Tile Floor
	Ceramic Tile Wains
	Ceramic Tub Alcove
	Vent Fan

(14) Water/Sewer

	Public Water
	Public Sewer
	Water Well
	1000 Gal Septic
	2000 Gal Septic

Lump Sum Items:

(15) Built-ins

	Appliance Allow.
	Cook Top
	Dishwasher
	Garbage Disposal
	Bath Heater
	Vent Fan
	Hot Tub
	Unvented Hood
	Vented Hood
	Intercom
	Jacuzzi Tub
	Jacuzzi repl.Tub
	Oven
	Microwave
	Standard Range
	Self Clean Range
	Sauna
	Trash Compactor
	Central Vacuum
	Security System

(15) Fireplaces

	Interior 1 Story
	Interior 2 Story
	2nd/Same Stack
	Two Sided
	Exterior 1 Story
	Exterior 2 Story
	Prefab 1 Story
	Prefab 2 Story
	Heat Circulator
	Raised Hearth
	Wood Stove
	Direct-Vented Gas

Class: CD
Effec. Age: 49
Floor Area: 0
Total Base New : 79,066 E.C.F.
Total Depr Cost: 21,578 X 1.297
Estimated T.C.V: 27,987

(16) Porches/Decks

Area	Type
160	4in Concrete
200	CCP (1 Story)

(17) Garage

Year Built:
Car Capacity:
Class: CD
Exterior: Pole
Brick Ven.: 0
Stone Ven.: 0
Common Wall: Detache
Foundation: 18 Inch
Finished ?:
Auto. Doors: 0
Mech. Doors: 0
Area: 800
% Good: 26
Storage Area: 0
No Conc. Floor: 800

Bsmnt Garage:

Carport Area:
Roof:

Cost Est. for Res. Bldg: 2 Single Family PLAIN Cls CD Blt 0
(11) Heating System: Forced Air w/ Ducts
Ground Area = 0 SF Floor Area = 0 SF.
Phy/Ab.Phy/Func/Econ/Comb. % Good=51/100/100/100/51
Building Areas

Stories / Exterior / Foundation	Size	Cost New	Depr. Cost	
Other Additions/Adjustments				
Porches				
CCP (1 Story)	200	4,834	1,982	*4
4in Concrete	160	1,184	604	
Garages				
Class: CD Exterior: Pole (Unfinished)				
Base Cost	800	18,920	4,919	*2
No Concrete Floor	800	-4,920	-1,279	
Class: CD Exterior: Pole (Unfinished)				
Storage Over Garage	1600	19,712	5,125	
Base Cost	1600	34,800	9,048	*2
No Concrete Floor	1600	-9,840	-2,558	
Class: D Exterior: Siding Foundation: 18 Inch (Unfinished)				
Base Cost	600	17,742	4,613	*2
No Concrete Floor	600	-3,366	-875	
	Totals:	79,066	21,578	

Notes:
ECF (RESIDENTIAL) 1.297 => TCV: 27,987

*** Information herein deemed reliable but not guaranteed***

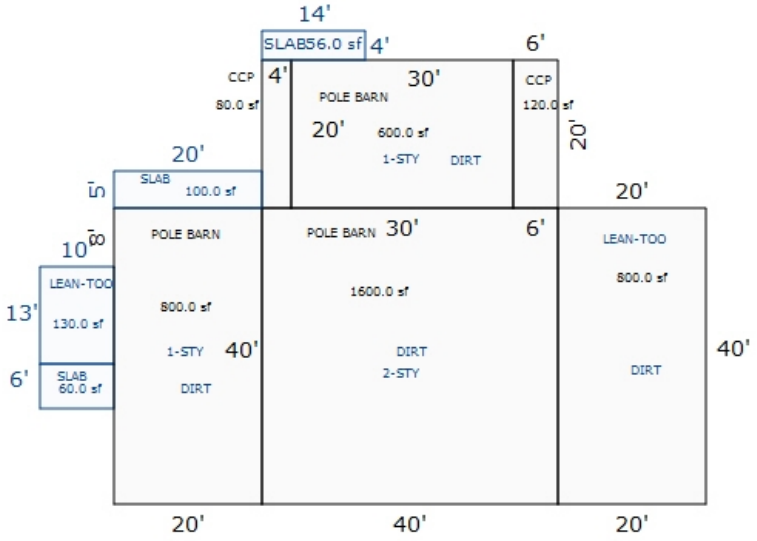

Sketch by Apex Sketch

*** Information herein deemed reliable but not guaranteed***

Parcel Number: 2410-36-4402 Jurisdiction: GREENWOOD TWP County: WEXFORD Printed on 02/15/2024

Grantor	Grantee	Sale Price	Sale Date	Inst. Type	Terms of Sale	Liber & Page	Verified By	Prcnt. Trans.
COON, JAIME L	UPTEGRAFT AUSTIN L	100,000	10/30/2023	WD	03-ARM'S LENGTH	696/1051	PROPERTY TRANSFER	100.0
BOOK, HALIE M	COON, JAIME L	0	12/04/2019	QC	21-NOT USED/OTHER	686 /905	DEED	100.0
BOOK, KEVIN A & HALIE M	BOOK, HALIE M	1	11/25/2019	QC	21-NOT USED/OTHER	686/904	DEED	0.0
FEDERAL HOME LOAN MORTGAGE	BOOK, KEVIN A & HALIE M	25,000	12/02/2011	WD	11-FROM LENDING INSTITUTI	644/827	DEED	100.0

Property Address

5861 E 14 RD

Owner's Name/Address

UPTEGRAFT AUSTIN L
697 N MICHIGAN AVE
MANTON MI 49663

Tax Description

SE 1/4 OF SE 1/4 OF SE 1/4 DESC AS COM AT SE COR OF SEC: TH W 650.74 FT; N 656.54 FT; E 649.36 FT; S 655.57 FT TO POB. --9.79 A. M/L-- GW. SEC. 36 T24N R10W -MANTON-

Comments/Influences

The Equalizer. Copyright (c) 1999 - 2009. Licensed To: Township of Greenwood, County of Wexford, Michigan

Class: RESIDENTIAL-IMPROV Zoning:

School: MANTON CONSOLIDATED SCHOOLS

P.R.E. 100% 01/28/2024

:

2024 Est TCV 133,903 TCV/TFA: 106.78

Building Permit(s)	Date	Number	Status

X Improved | Vacant

	Public Improvements
	Dirt Road
X	Gravel Road
	Paved Road
	Storm Sewer
	Sidewalk
	Water
	Sewer
X	Electric
	Gas
	Curb
	Street Lights
	Standard Utilities
	Underground Utils.

	Topography of Site
	Level
X	Rolling
X	Low
	High
	Landscaped
	Swamp
	Wooded
	Pond
	Waterfront
	Ravine
	Wetland
	Flood Plain
X	OPEN

Who	When	What
GLA	05/11/2020	INSPECTION
GLA	07/10/2019	INSPECTION
GLA	08/07/2014	INSPECTION

Land Value Estimates for Land Table 4010.LAND VALUES

Description	Frontage	Depth	* Factors * Front	Depth	Rate	%Adj.	Reason	Value
	650.00	656.00	1.0000	0.0000	0	100*		0
ACREAGE			8.800 Acres		4,787	100		42,124
ROW			0.990 Acres		0	100		0

* denotes lines that do not contribute to the total acreage calculation.

650 Actual Front Feet, 9.79 Total Acres Total Est. Land Value = 42,124

Land Improvement Cost Estimates

Description	Rate	Size	% Good	Cash Value
Wood Frame	25.79	80	19	392

Total Estimated Land Improvements True Cash Value = 392

Year	Land Value	Building Value	Assessed Value	Board of Review	Tribunal/ Other	Taxable Value
2024	21,100	45,900	67,000			67,000S
2023	12,600	40,200	52,800			47,250C
2022	11,400	33,600	45,000			45,000S
2021	12,000	33,600	45,600			44,920C

*** Information herein deemed reliable but not guaranteed***

Building Type

X	Single Family
	Mobile Home
	Town Home
	Duplex
	A-Frame

X	Wood Frame

Building Style: TWO STORY

Yr Built	Remodeled
0	0

Condition: Poor

Room List

	Basement
	1st Floor
	2nd Floor
	Bedrooms

(1) Exterior

	Wood/Shingle
	Aluminum/Vinyl
	Brick
X	Asphalt
	Insulation

(2) Windows

X	Many Avg. Few	X	Large Avg. Small

X	Wood Sash
	Metal Sash
	Vinyl Sash
	Double Hung
	Horiz. Slide
	Casement
	Double Glass
	Patio Doors
	Storms & Screens

(3) Roof

X	Gable		Gambrel
	Hip		Mansard
	Flat		Shed

X	Asphalt Shingle

Chimney:

(3) Roof (cont.)

	Eavestrough
	Insulation
0	Front Overhang
0	Other Overhang

(4) Interior

	Drywall		Plaster
	Paneled		Wood T&G

Trim & Decoration

	Ex		Ord		Min

Size of Closets

	Lg		Ord		Small

Doors:		Solid		H.C.

(5) Floors

Kitchen:
Other:
Other:

(6) Ceilings

(7) Excavation

Basement: 900 S.F.
Crawl: 0 S.F.
Slab: 0 S.F.
Height to Joists: 0.0

(8) Basement

	Conc. Block
	Poured Conc.
	Stone
	Treated Wood
	Concrete Floor

(9) Basement Finish

	Recreation SF
	Living SF
	Walkout Doors (B)
	No Floor SF
	Walkout Doors (A)

(10) Floor Support

Joists:
Unsupported Len:
Cntr.Sup:

(11) Heating/Cooling

X	Gas		Oil		Elec.
	Wood		Coal		Steam

	Forced Air w/o Ducts
X	Forced Air w/ Ducts
	Forced Hot Water
	Electric Baseboard
	Elec. Ceil. Radiant
	Radiant (in-floor)
	Electric Wall Heat
	Space Heater
	Wall/Floor Furnace
	Forced Heat & Cool
	Heat Pump
	No Heating/Cooling

	Central Air
	Wood Furnace

(12) Electric

0	Amps Service

No./Qual. of Fixtures

	Ex.		Ord.		Min

No. of Elec. Outlets

	Many		Ave.		Few

(13) Plumbing

1	Average Fixture(s)
	3 Fixture Bath
	2 Fixture Bath
	Softener, Auto
	Softener, Manual
	Solar Water Heat
	No Plumbing
	Extra Toilet
	Extra Sink
	Separate Shower
	Ceramic Tile Floor
	Ceramic Tile Wains
	Ceramic Tub Alcove
	Vent Fan

(14) Water/Sewer

	Public Water
	Public Sewer
1	Water Well
1	1000 Gal Septic
	2000 Gal Septic

Lump Sum Items:

(15) Built-ins

	Appliance Allow.
	Cook Top
	Dishwasher
	Garbage Disposal
	Bath Heater
	Vent Fan
	Hot Tub
	Unvented Hood
	Vented Hood
	Intercom
	Jacuzzi Tub
	Jacuzzi repl.Tub
	Oven
	Microwave
	Standard Range
	Self Clean Range
	Sauna
	Trash Compactor
	Central Vacuum
	Security System

(15) Fireplaces

	Interior 1 Story
	Interior 2 Story
	2nd/Same Stack
	Two Sided
	Exterior 1 Story
	Exterior 2 Story
	Prefab 1 Story
	Prefab 2 Story
	Heat Circulator
	Raised Hearth
	Wood Stove
	Direct-Vented Gas

Class: D -10
Effec. Age: 70
Floor Area: 1,254
Total Base New : 153,249 E.C.F.
Total Depr Cost: 68,964 X 1.297
Estimated T.C.V: 89,446

(16) Porches/Decks

Area	Type
132	WGEP (1 Story)
204	Treated Wood
416	Roof Cover Onl

(17) Garage

Year Built:
Car Capacity:
Class:
Exterior:
Brick Ven.:
Stone Ven.:
Common Wall:
Foundation:
Finished ?:
Auto. Doors:
Mech. Doors:
Area:
% Good:
Storage Area:
No Conc. Floor:

Bsmnt Garage:

Carport Area:
Roof:

Cost Est. for Res. Bldg: 1 Single Family TWO STORY Cls D-10 Blt 0
(11) Heating System: Forced Air w/ Ducts
Ground Area = 900 SF Floor Area = 1254 SF.
Phy/Ab.Phy/Func/Econ/Comb. % Good=45/100/100/100/45
Building Areas

Stories	Exterior	Foundation	Size	Cost New	Depr. Cost
1.5 Story	Siding	Basement	384		
1.5 Story	Siding	Basement	324		
1 Story	Siding	Basement	192		
			Total:	124,343	55,956
Other Additions/Adjustments					
Water/Sewer					
1000 Gal Septic			1	4,293	1,932
Water Well, 100 Feet			1	5,545	2,495
Porches					
WGEP (1 Story)			132	9,798	4,409
Deck					
Treated Wood			204	4,037	1,817
w/Roof (Roof portion)			416	5,233	2,355
			Totals:	153,249	68,964

Notes:
ECF (RESIDENTIAL) 1.297 => TCV: 89,446

*** Information herein deemed reliable but not guaranteed***

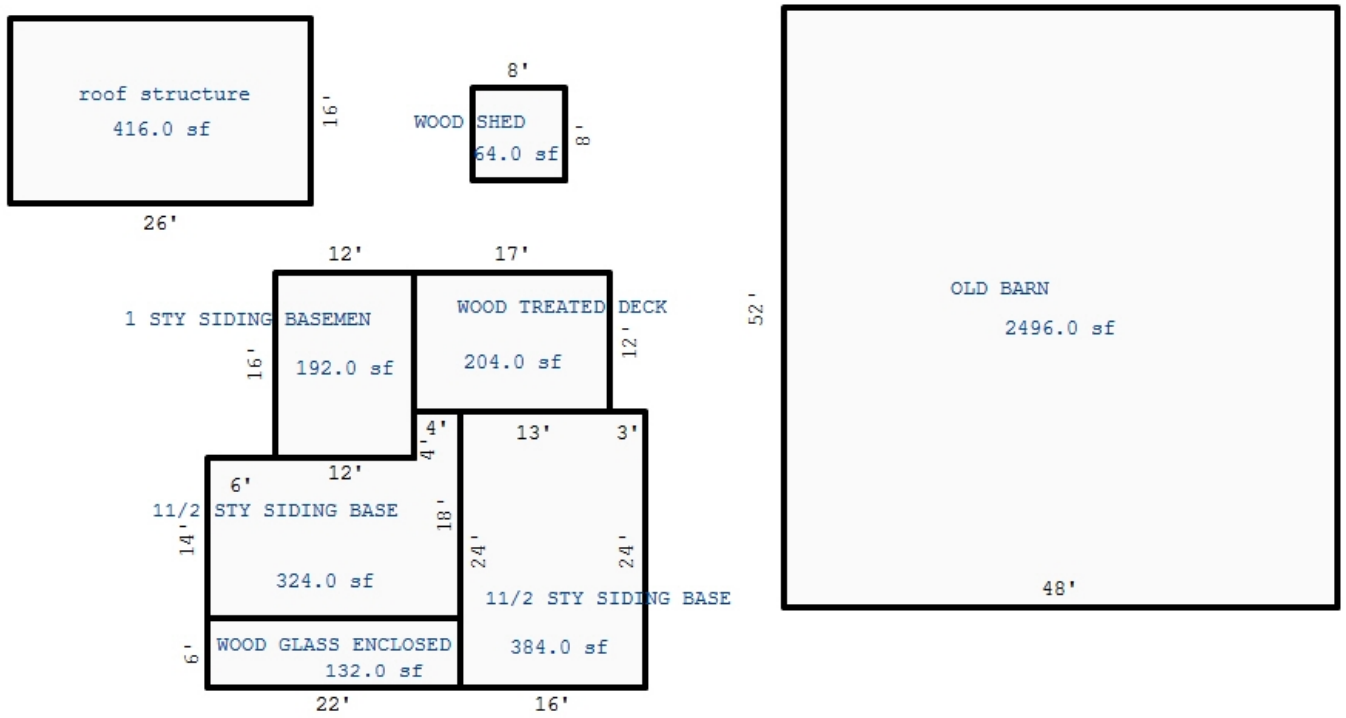

Sketch by Apex Sketch

*** Information herein deemed reliable but not guaranteed***

Building Type	Barn - General Purpose				
Year Built					
Class/Construction	D,Pole				
Quality/Exterior	Low Cost				
# of Walls, Perimeter	4 Wall, 196				
Height	10				
Heating System	No Heating/Cooling				
Length/Width/Area	54 x 48 = 2592				
Cost New	$ 51,295				
Phy./Func./Econ. %Good	20/100/100 20.0				
Depreciated Cost	$ 2,052				
+ Unit-In-Place Items	$ 0				
Description, Size X Rate X %Good = Cost Itemized ->\ Unit-In-Place ->\ Items ->\					
E.C.F.	X 0.946				
% Good	20				
Est. True Cash Value	$ 1,941				
Comments:					
Total Estimated True Cash Value of Agricultural Improvements / This Card: 1941 / All Cards: 1941					

*** Information herein deemed reliable but not guaranteed***

Parcel Number: 2410-HESL-01 Jurisdiction: GREENWOOD TWP County: WEXFORD Printed on 02/15/2024

Grantor	Grantee	Sale Price	Sale Date	Inst. Type	Terms of Sale	Liber & Page	Verified By	Prcnt. Trans.
KERR, MICHAEL & DANIELL	KERR, MICHAEL& JO ANNE	0	06/24/2019	QC	21-NOT USED/OTHER	6851/177	DEED	0.0
LINGAUR, GARY	LINGAUR, GARY & PATTI TRUS	100	08/08/2018	QC	14-INTO/OUT OF TRUST	683/787	DEED	0.0
KERR, MICHAEL	KERR, MICHAEL & DANIELL	0	07/12/2018	QC	21-NOT USED/OTHER	6833/04	DEED	0.0
KERR, LORNIE	KERR, MICHAEL, LINGAUR, GA	0	10/28/2017	PTA	18-LIFE ESTATE		DEED	0.0

Property Address

10277 RIVER RD

Owner's Name/Address

KERR, MICHAEL & DANIELL
GARY LINGAUR
2015 EVERGREEN PL NE
OWATONNA MN 55060

Tax Description

LOT 1 HELSEL'S SUBDIVISION GW. SEC. 8 T24N R10W -MANTON-

Comments/Influences

Class: RESIDENTIAL-IMPROV Zoning:

School: MANTON CONSOLIDATED SCHOOLS

P.R.E. 0%

:

2024 Est TCV 243,456 TCV/TFA: 223.76

Building Permit(s)	Date	Number	Status
RESIDENTIAL - NEW	08/27/2007	PM9770	
RESIDENTIAL - NEW	08/06/2007	PP4529	
RESIDENTIAL - NEW	05/31/2007	PB13554	

X Improved | Vacant

	Public Improvements
	Dirt Road
X	Gravel Road
	Paved Road
	Storm Sewer
	Sidewalk
	Water
	Sewer
X	Electric
	Gas
	Curb
	Street Lights
	Standard Utilities
	Underground Utils.

	Topography of Site
	Level
X	Rolling
	Low
	High
	Landscaped
	Swamp
X	Wooded
	Pond
	Waterfront
	Ravine
	Wetland
	Flood Plain
X	OPEN

Who	When	What
GLA	05/13/2021	INSPECTION
GLA	08/07/2014	INSPECTION

Land Value Estimates for Land Table 4010.LAND VALUES

Description	Frontage	Depth	* Factors * Front	Depth	Rate	%Adj.	Reason	Value
HELSEL RIV LOW	100.00	0.00	1.0000	1.0000	315	100		31,500
100 Actual Front Feet, 0.00 Total Acres							Total Est. Land Value =	31,500

Land Improvement Cost Estimates

Description	Rate	Size	% Good	Cash Value
Wood Frame	39.52	12	84	398
Wood Frame	28.20	120	84	2,843
Total Estimated Land Improvements True Cash Value =				3,241

Year	Land Value	Building Value	Assessed Value	Board of Review	Tribunal/ Other	Taxable Value
2024	15,800	105,900	121,700			66,031C
2023	13,500	86,600	100,100			62,887C
2022	13,500	73,000	86,500			59,893C
2021	10,000	71,800	81,800			57,980C

The Equalizer. Copyright (c) 1999 - 2009.
Licensed To: Township of Greenwood, County of Wexford, Michigan

*** Information herein deemed reliable but not guaranteed***

Building Type

X	Single Family
	Mobile Home
	Town Home
	Duplex
	A-Frame
X	Wood Frame

Building Style: PLAIN

Yr Built	Remodeled
2007	0

Condition: Good

Room List

	Basement
	1st Floor
	2nd Floor
	Bedrooms

(1) Exterior

	Wood/Shingle
X	Aluminum/Vinyl
	Brick
X	Insulation

(2) Windows

X	Many Avg. Few	X	Large Avg. Small

	Wood Sash
	Metal Sash
X	Vinyl Sash
	Double Hung
	Horiz. Slide
	Casement
	Double Glass
	Patio Doors
X	Storms & Screens

(3) Roof

X	Gable		Gambrel
	Hip		Mansard
	Flat		Shed

X	Asphalt Shingle

Chimney:

(3) Roof (cont.)

	Eavestrough
X	Insulation
0	Front Overhang
0	Other Overhang

(4) Interior

X	Drywall Paneled		Plaster Wood T&G

Trim & Decoration

	Ex	X	Ord		Min

Size of Closets

	Lg	X	Ord		Small

Doors: | | Solid | X | H.C.

(5) Floors

Kitchen:
Other: Linoleum
Other: Carpeted

(6) Ceilings

X	Drywall

(7) Excavation

Basement: 0 S.F.
Crawl: 1088 S.F.
Slab: 0 S.F.
Height to Joists: 0.0

(8) Basement

	Conc. Block
	Poured Conc.
	Stone
	Treated Wood
	Concrete Floor

(9) Basement Finish

	Recreation SF
	Living SF
	Walkout Doors (B)
	No Floor SF
	Walkout Doors (A)

(10) Floor Support

Joists:
Unsupported Len:
Cntr.Sup:

(11) Heating/Cooling

X	Gas Wood		Oil Coal		Elec. Steam

	Forced Air w/o Ducts
X	Forced Air w/ Ducts
	Forced Hot Water
	Electric Baseboard
	Elec. Ceil. Radiant
	Radiant (in-floor)
	Electric Wall Heat
	Space Heater
	Wall/Floor Furnace
	Forced Heat & Cool
	Heat Pump
	No Heating/Cooling

	Central Air
	Wood Furnace

(12) Electric

150	Amps Service

No./Qual. of Fixtures

	Ex.	X	Ord.		Min

No. of Elec. Outlets

	Many	X	Ave.		Few

(13) Plumbing

	Average Fixture(s)
2	3 Fixture Bath
	2 Fixture Bath
	Softener, Auto
	Softener, Manual
	Solar Water Heat
	No Plumbing
	Extra Toilet
	Extra Sink
	Separate Shower
	Ceramic Tile Floor
	Ceramic Tile Wains
	Ceramic Tub Alcove
	Vent Fan

(14) Water/Sewer

	Public Water
	Public Sewer
1	Water Well
1	1000 Gal Septic
	2000 Gal Septic

Lump Sum Items:

(15) Built-ins

	Appliance Allow.
	Cook Top
	Dishwasher
	Garbage Disposal
	Bath Heater
	Vent Fan
	Hot Tub
	Unvented Hood
	Vented Hood
	Intercom
	Jacuzzi Tub
	Jacuzzi repl.Tub
	Oven
	Microwave
	Standard Range
	Self Clean Range
	Sauna
	Trash Compactor
	Central Vacuum
	Security System

(15) Fireplaces

	Interior 1 Story
	Interior 2 Story
	2nd/Same Stack
	Two Sided
	Exterior 1 Story
	Exterior 2 Story
	Prefab 1 Story
	Prefab 2 Story
	Heat Circulator
	Raised Hearth
	Wood Stove
	Direct-Vented Gas

Class: C
Effec. Age: 17
Floor Area: 1,088
Total Base New : 194,402 E.C.F.
Total Depr Cost: 160,921 X 1.297
Estimated T.C.V: 208,715

(16) Porches/Decks

Area	Type
200	WGEP (1 Story)
52	WPP
85	WGEP (1 Story)

(17) Garage

Year Built:
Car Capacity:
Class:
Exterior:
Brick Ven.:
Stone Ven.:
Common Wall:
Foundation:
Finished ?:
Auto. Doors:
Mech. Doors:
Area:
% Good:
Storage Area:
No Conc. Floor:

Bsmnt Garage:

Carport Area:
Roof:

Cost Est. for Res. Bldg: 1 Single Family PLAIN Cls C Blt 2007
(11) Heating System: Forced Air w/ Ducts
Ground Area = 1088 SF Floor Area = 1088 SF.
Phy/Ab.Phy/Func/Econ/Comb. % Good=83/100/100/100/83
Building Areas

Stories	Exterior	Foundation	Size	Cost New	Depr. Cost	
1+ Story	Siding	Crawl Space	1,088			
			Total:	151,884	126,063	
Other Additions/Adjustments						
Plumbing						
3 Fixture Bath			1	4,678	3,883	
Water/Sewer						
1000 Gal Septic			1	4,899	4,066	
Water Well, 100 Feet			1	5,849	4,855	
Porches						
WGEP (1 Story)			200	15,202	12,618	
WPP			52	2,130	1,768	
WGEP (1 Story)			85	8,730	7,246	
Local Cost Items						
SHED			132	1,030	422	*4
			Totals:	194,402	160,921	

Notes:
ECF (RESIDENTIAL) 1.297 => TCV: 208,715

*** Information herein deemed reliable but not guaranteed***

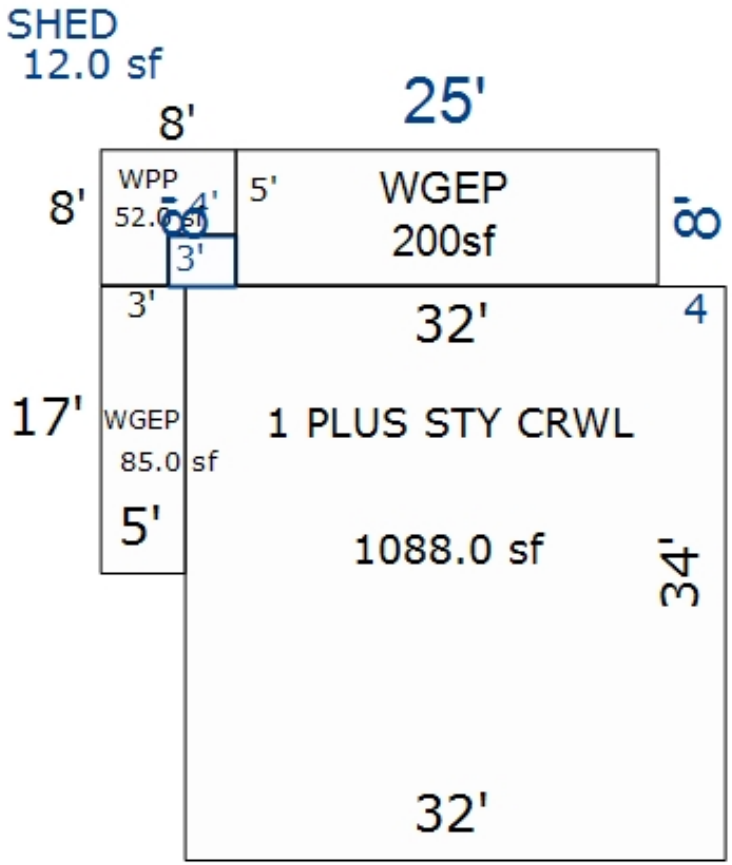

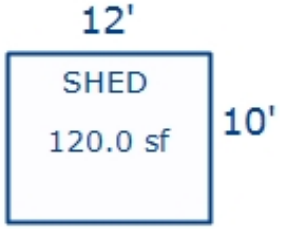

*** Information herein deemed reliable but not guaranteed***

Parcel Number: 2410-HESL-02 Jurisdiction: GREENWOOD TWP County: WEXFORD Printed on 02/15/2024

Grantor	Grantee	Sale Price	Sale Date	Inst. Type	Terms of Sale	Liber & Page	Verified By	Prcnt. Trans.
MOWERY, ROBERT J	PATTERSON, JOSEPH L	70,000	05/19/2022	WD	03-ARM'S LENGTH	COPY OF DEED	DEED	100.0
KUKUK	MOWERY, ROBERT J	80,000	05/18/2022	WD	16-LC PAYOFF	693/165	DEED	0.0
MOWERY, ROBERT J		67,675	11/29/2019	LC	21-NOT USED/OTHER	6867/98	DEED	0.0
KUKUK, JOLENE M & ROBERT L	MOWERY, ROBERT J	80,000	12/01/2016	LC	03-ARM'S LENGTH	678 /2634	DEED	100.0

Property Address

10269 RIVER RD

Owner's Name/Address

PATTERSON, JOSEPH L
10269 RIVER RD
MANTON MI 49663

Tax Description

LOT 2 HELSEL'S SUBDIVISION GW. SEC. 8 T24N R10W -MANTON-

Comments/Influences

The Equalizer. Copyright (c) 1999 - 2009. Licensed To: Township of Greenwood, County of Wexford, Michigan

Class: RESIDENTIAL-IMPROV Zoning:

School: MANTON CONSOLIDATED SCHOOLS

P.R.E. 0%

:

2024 Est TCV 228,292 TCV/TFA: 288.25

Building Permit(s)	Date	Number	Status
Pole Barn	07/20/2022	PB22-0194	ENTERED
DEMOLITION	06/09/2022	PB22-0144	ENTERED

X Improved | Vacant

	Public Improvements
	Dirt Road
X	Gravel Road
	Paved Road
	Storm Sewer
	Sidewalk
	Water
	Sewer
X	Electric
	Gas
	Curb
	Street Lights
	Standard Utilities
	Underground Utils.

	Topography of Site
	Level
X	Rolling
	Low
	High
	Landscaped
	Swamp
X	Wooded
	Pond
	Waterfront
	Ravine
	Wetland
	Flood Plain
X	OPEN

Who	When	What
DB	10/23/2023	INSPECTION
GLA	10/31/2022	INSPECTION
GLA	08/07/2014	INSPECTION

Land Value Estimates for Land Table 4010.LAND VALUES

Description	Frontage	Depth	* Factors * Front	Depth	Rate	%Adj.	Reason	Value
HELSEL RIV LOW	100.00	150.00	1.0000	1.0000	315	100		31,500
100 Actual Front Feet, 0.34 Total Acres							Total Est. Land Value =	31,500

Land Improvement Cost Estimates

Description	Rate	Size	% Good	Cash Value
D/W/P: 3.5 Concrete	6.63	576	97	3,704
Total Estimated Land Improvements True Cash Value =				3,704

Year	Land Value	Building Value	Assessed Value	Board of Review	Tribunal/ Other	Taxable Value
2024	15,800	98,300	114,100			101,825C
2023	13,500	39,000	52,500			52,500S
2022	13,500	47,700	61,200			52,222C
2021	10,000	48,000	58,000			50,554C

*** Information herein deemed reliable but not guaranteed***

Building Type

X	Single Family
	Mobile Home
	Town Home
	Duplex
	A-Frame
X	Wood Frame

Building Style: PLAIN

Yr Built	Remodeled
2022	0

Condition: Good

Room List

	Basement
	1st Floor
	2nd Floor
	Bedrooms

(1) Exterior

	Wood/Shingle
X	Aluminum/Vinyl
	Brick
X	Insulation

(2) Windows

	Many		Large
X	Avg.	X	Avg.
	Few		Small

	Wood Sash
	Metal Sash
X	Vinyl Sash
	Double Hung
	Horiz. Slide
	Casement
	Double Glass
	Patio Doors
X	Storms & Screens

(3) Roof

X	Gable		Gambrel
	Hip		Mansard
	Flat		Shed

X	Asphalt Shingle

Chimney:

(3) Roof (cont.)

	Eavestrough
X	Insulation
0	Front Overhang
0	Other Overhang

(4) Interior

X	Drywall		Plaster
	Paneled		Wood T&G

Trim & Decoration

	Ex	X	Ord		Min

Size of Closets

	Lg	X	Ord		Small

Doors:		Solid	X	H.C.	

(5) Floors

Kitchen:
Other: Linoleum
Other: Carpeted

(6) Ceilings

X	Drywall		

(7) Excavation

Basement: 0 S.F.
Crawl: 0 S.F.
Slab: 792 S.F.
Height to Joists: 0.0

(8) Basement

	Conc. Block
	Poured Conc.
	Stone
	Treated Wood
	Concrete Floor

(9) Basement Finish

	Recreation SF
	Living SF
	Walkout Doors (B)
	No Floor SF
	Walkout Doors (A)

(10) Floor Support

Joists:
Unsupported Len:
Cntr.Sup:

(11) Heating/Cooling

X	Gas		Oil		Elec.
	Wood		Coal		Steam

	Forced Air w/o Ducts
	Forced Air w/ Ducts
	Forced Hot Water
	Electric Baseboard
	Elec. Ceil. Radiant
	Radiant (in-floor)
	Electric Wall Heat
	Space Heater
X	Wall/Floor Furnace
	Forced Heat & Cool
	Heat Pump
	No Heating/Cooling

	Central Air
	Wood Furnace

(12) Electric

150	Amps Service

No./Qual. of Fixtures

	Ex.	X	Ord.		Min

No. of Elec. Outlets

	Many	X	Ave.		Few

(13) Plumbing

	Average Fixture(s)
1	3 Fixture Bath
	2 Fixture Bath
	Softener, Auto
	Softener, Manual
	Solar Water Heat
	No Plumbing
	Extra Toilet
	Extra Sink
	Separate Shower
	Ceramic Tile Floor
	Ceramic Tile Wains
	Ceramic Tub Alcove
	Vent Fan

(14) Water/Sewer

	Public Water
	Public Sewer
1	Water Well
1	1000 Gal Septic
	2000 Gal Septic

Lump Sum Items:

(15) Built-ins

	Appliance Allow.
	Cook Top
	Dishwasher
	Garbage Disposal
	Bath Heater
	Vent Fan
	Hot Tub
	Unvented Hood
	Vented Hood
	Intercom
	Jacuzzi Tub
	Jacuzzi repl.Tub
	Oven
	Microwave
	Standard Range
	Self Clean Range
	Sauna
	Trash Compactor
	Central Vacuum
	Security System

(15) Fireplaces

	Interior 1 Story
	Interior 2 Story
	2nd/Same Stack
	Two Sided
	Exterior 1 Story
	Exterior 2 Story
	Prefab 1 Story
	Prefab 2 Story
	Heat Circulator
	Raised Hearth
	Wood Stove
	Direct-Vented Gas

Class: CD
Effec. Age: 3
Floor Area: 792
Total Base New : 153,476 E.C.F.
Total Depr Cost: 148,873 X 1.297
Estimated T.C.V: 193,088

(16) Porches/Decks

Area	Type
360	WCP (1 Story)

(17) Garage

Year Built: 2022
Car Capacity:
Class: CD
Exterior: Pole
Brick Ven.: 0
Stone Ven.: 0
Common Wall: Detache
Foundation: 18 Inch
Finished ?: Yes
Auto. Doors: 2
Mech. Doors: 0
Area: 1368
% Good: 0
Storage Area: 0
No Conc. Floor: 0

Bsmnt Garage:

Carport Area:
Roof:

Cost Est. for Res. Bldg: 1 Single Family PLAIN Cls CD Blt 2022
(11) Heating System: Wall/Floor Furnace
Ground Area = 792 SF Floor Area = 792 SF.
Phy/Ab.Phy/Func/Econ/Comb. % Good=97/100/100/100/97
Building Areas

Stories	Exterior	Foundation	Size	Cost New	Depr. Cost
1 Story	Siding	Slab	792		
			Total:	91,974	89,215
Other Additions/Adjustments					
Water/Sewer					
1000 Gal Septic			1	4,582	4,445
Water Well, 100 Feet			1	5,680	5,510
Porches					
WCP (1 Story)			360	10,591	10,273
Garages					
Class: CD Exterior: Pole (Finished)					
Door Opener			2	977	948
Base Cost			1368	39,672	38,482
			Totals:	153,476	148,873

Notes:
ECF (RESIDENTIAL) 1.297 => TCV: 193,088

*** Information herein deemed reliable but not guaranteed***

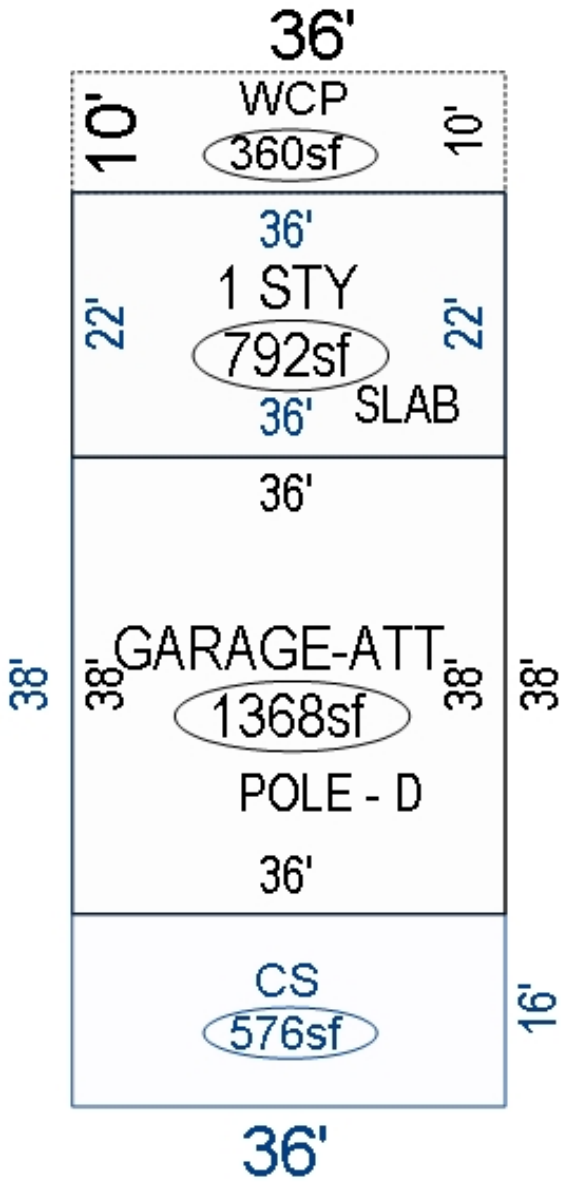

*** Information herein deemed reliable but not guaranteed***

Parcel Number: 2410-HESL-03 Jurisdiction: GREENWOOD TWP County: WEXFORD Printed on 02/15/2024

Grantor	Grantee	Sale Price	Sale Date	Inst. Type	Terms of Sale	Liber & Page	Verified By	Prcnt. Trans.
BRENKE, RANDY L & JULIE A	BRENKE JORDAN T & GARRETT	0	08/14/2023	QC	15-LADY BIRD	695-2930	PROPERTY TRANSFER	0.0
BURNS, ROSEMARY	BRENKE, RANDY L & JULIE A	220,000	09/13/2013	WD	03-ARM'S LENGTH	662/1292	DEED	100.0
CARLSON, ELDON	BURNS, ROSEMARY	68,000	05/05/1992	WD	03-ARM'S LENGTH	329:350	DEED	0.0
MCDANIEL, HOWARD	CARLSON, ELDON	35,000	07/30/1988	LC	03-ARM'S LENGTH	311:977	DEED	0.0

Property Address

10275 RIVER RD

Owner's Name/Address

BRENKE, RANDY L & JULIE A
8822 S COUNTY LINE
RIGA MI 49276

Tax Description

LOTS 3 & 4 EXC A PART OF LOT 4 DESC AS COM AT SE COR THERE- OF AT INTERSECTION OF N LINE LOT 5; N 70D09M W 141.14 FT; N 13D00M E ALONG WLY LINE LOT 4, 20 FT; SELY TO POB. ALSO ELY 40 FT OF LOT 5 EXC S 13 FT THEREOF AS MEASURED ON E LINE LOT 5; ALSO A PERPETUAL EASEMT & R/W FOR SEWER LINE IN NLY 5 FT OF ELY 201.04 FT OF LOT 5 & BEING ADJACENT TO & S OF PRIVATE 40 FT ALLEY LYING NLY OF LOT 5 HELSELS SUBDIVISION GW. SEC. 8 T24N R10W -MANTON-

Comments/Influences

Class: RESIDENTIAL-IMPROV Zoning:

School: MANTON CONSOLIDATED SCHOOLS

P.R.E. 0%

:

2024 Est TCV 510,271 TCV/TFA: 146.42

Building Permit(s)	Date	Number	Status
RESIDENTIAL - REMODEL	10/23/2002	PB11296	

X	Improved		Vacant

	Public Improvements
	Dirt Road
X	Gravel Road
	Paved Road
	Storm Sewer
	Sidewalk
	Water
	Sewer
X	Electric
	Gas
	Curb
	Street Lights
	Standard Utilities
	Underground Utils.

	Topography of Site
	Level
X	Rolling
	Low
	High
	Landscaped
	Swamp
X	Wooded
	Pond
	Waterfront
	Ravine
	Wetland
	Flood Plain
X	OPEN

Who	When	What
GLA	05/13/2021	INSPECTION
GLA	08/07/2014	INSPECTION

Land Value Estimates for Land Table 4010.LAND VALUES

Description	Frontage	Depth	* Factors * Front	Depth	Rate	200 %Adj.	Reason	Value
HELSEL RIV LOW	270.00	0.00	1.0000	1.0000	315	100		85,050
270 Actual Front Feet, 0.00 Total Acres							Total Est. Land Value =	85,050

Land Improvement Cost Estimates

Description	Rate	Size	% Good	Cash Value
D/W/P: 3.5 Concrete	6.63	220	47	686
D/W/P: Asphalt Paving	3.12	1616	68	3,429
Total Estimated Land Improvements True Cash Value =				4,115

Year	Land Value	Building Value	Assessed Value	Board of Review	Tribunal/ Other	Taxable Value
2024	42,500	212,600	255,100			123,969C
2023	36,500	173,800	210,300			118,066C
2022	36,500	146,900	183,400			112,444C
2021	27,000	141,700	168,700			108,852C

The Equalizer. Copyright (c) 1999 - 2009.
Licensed To: Township of Greenwood, County of Wexford, Michigan

*** Information herein deemed reliable but not guaranteed***

Building Type

X	Single Family
	Mobile Home
	Town Home
	Duplex
	A-Frame
X	Wood Frame

Building Style: PLAIN

Yr Built	Remodeled
1996	0

Condition: Good

Room List

	Basement
	1st Floor
	2nd Floor
	Bedrooms

(1) Exterior

X	Wood/Shingle
	Aluminum/Vinyl
	Brick
X	Insulation

(2) Windows

X	Many		Large
	Avg.	X	Avg.
	Few		Small

	Wood Sash
	Metal Sash
X	Vinyl Sash
	Double Hung
	Horiz. Slide
	Casement
	Double Glass
	Patio Doors
X	Storms & Screens

(3) Roof

X	Gable		Gambrel
	Hip		Mansard
	Flat		Shed

X	Asphalt Shingle

Chimney:

(3) Roof (cont.)

	Eavestrough
X	Insulation
0	Front Overhang
0	Other Overhang

(4) Interior

X	Drywall		Plaster
	Paneled		Wood T&G

Trim & Decoration

	Ex	X	Ord		Min

Size of Closets

	Lg	X	Ord		Small

Doors:		Solid	X	H.C.	

(5) Floors

Kitchen:
Other: Linoleum
Other: Carpeted

(6) Ceilings

X	Drywall

(7) Excavation

Basement: 0 S.F.
Crawl: 2503 S.F.
Slab: 0 S.F.
Height to Joists: 0.0

(8) Basement

	Conc. Block
	Poured Conc.
	Stone
	Treated Wood
	Concrete Floor

(9) Basement Finish

	Recreation SF
	Living SF
	Walkout Doors (B)
	No Floor SF
	Walkout Doors (A)

(10) Floor Support

Joists:
Unsupported Len:
Cntr.Sup:

(11) Heating/Cooling

X	Gas		Oil		Elec.
	Wood		Coal		Steam

	Forced Air w/o Ducts
X	Forced Air w/ Ducts
	Forced Hot Water
	Electric Baseboard
	Elec. Ceil. Radiant
	Radiant (in-floor)
	Electric Wall Heat
	Space Heater
	Wall/Floor Furnace
	Forced Heat & Cool
	Heat Pump
	No Heating/Cooling

	Central Air
	Wood Furnace

(12) Electric

150	Amps Service

No./Qual. of Fixtures

	Ex.	X	Ord.		Min

No. of Elec. Outlets

	Many	X	Ave.		Few

(13) Plumbing

2	Average Fixture(s)
	3 Fixture Bath
	2 Fixture Bath
	Softener, Auto
	Softener, Manual
	Solar Water Heat
	No Plumbing
	Extra Toilet
	Extra Sink
	Separate Shower
	Ceramic Tile Floor
	Ceramic Tile Wains
	Ceramic Tub Alcove
	Vent Fan

(14) Water/Sewer

	Public Water
	Public Sewer
1	Water Well
1	1000 Gal Septic
	2000 Gal Septic

Lump Sum Items:

(15) Built-ins

	Appliance Allow.
	Cook Top
	Dishwasher
	Garbage Disposal
	Bath Heater
	Vent Fan
	Hot Tub
	Unvented Hood
	Vented Hood
	Intercom
	Jacuzzi Tub
	Jacuzzi repl.Tub
	Oven
	Microwave
	Standard Range
	Self Clean Range
	Sauna
	Trash Compactor
	Central Vacuum
	Security System

(15) Fireplaces

	Interior 1 Story
	Interior 2 Story
	2nd/Same Stack
	Two Sided
1	Exterior 1 Story
	Exterior 2 Story
	Prefab 1 Story
	Prefab 2 Story
	Heat Circulator
	Raised Hearth
	Wood Stove
	Direct-Vented Gas

Class: C
Effec. Age: 28
Floor Area: 3,485
Total Base New : 451,058 E.C.F.
Total Depr Cost: 324,677 X 1.297
Estimated T.C.V: 421,106

(16) Porches/Decks

Area	Type
102	WCP (1 Story)
72	CCP (1 Story)

(17) Garage

Year Built:
Car Capacity:
Class: C
Exterior: Pole
Brick Ven.: 0
Stone Ven.: 0
Common Wall: Detache
Foundation: 18 Inch
Finished ?:
Auto. Doors: 0
Mech. Doors: 0
Area: 660
% Good: 0
Storage Area: 0
No Conc. Floor: 0

Bsmnt Garage:

Carport Area:
Roof:

Cost Est. for Res. Bldg: 1 Single Family PLAIN Cls C Blt 1996
(11) Heating System: Forced Air w/ Ducts
Ground Area = 2503 SF Floor Area = 3485 SF.
Phy/Ab.Phy/Func/Econ/Comb. % Good=72/100/100/100/72
Building Areas

Stories	Exterior	Foundation	Size	Cost New	Depr. Cost
2 Story	Siding	Crawl Space	982		
1 Story	Siding	Crawl Space	541		
1 Story	Siding	Crawl Space	896		
1 Story	Siding	Crawl Space	84		
			Total:	377,747	271,977

Other Additions/Adjustments			
Plumbing			
3 Fixture Bath	1	4,678	3,368
Water/Sewer			
1000 Gal Septic	1	4,899	3,527
Water Well, 100 Feet	1	5,849	4,211
Porches			
WCP (1 Story)	102	4,862	3,501
CCP (1 Story)	72	2,112	1,521
Garages			
Class: C Exterior: Pole (Unfinished)			
Base Cost	660	18,566	13,368
Class: C Exterior: Siding Foundation: 42 Inch (Unfinished)			
Base Cost	624	26,401	19,009
Common Wall: 1 Wall	1	-2,705	-1,948
Fireplaces			
Exterior 1 Story	1	6,559	4,722
Local Cost Items			
SHED	268	2,090	1,421 *6

<<<<< Calculations too long. See Valuation printout for complete pricing. >>>>>

*** Information herein deemed reliable but not guaranteed***

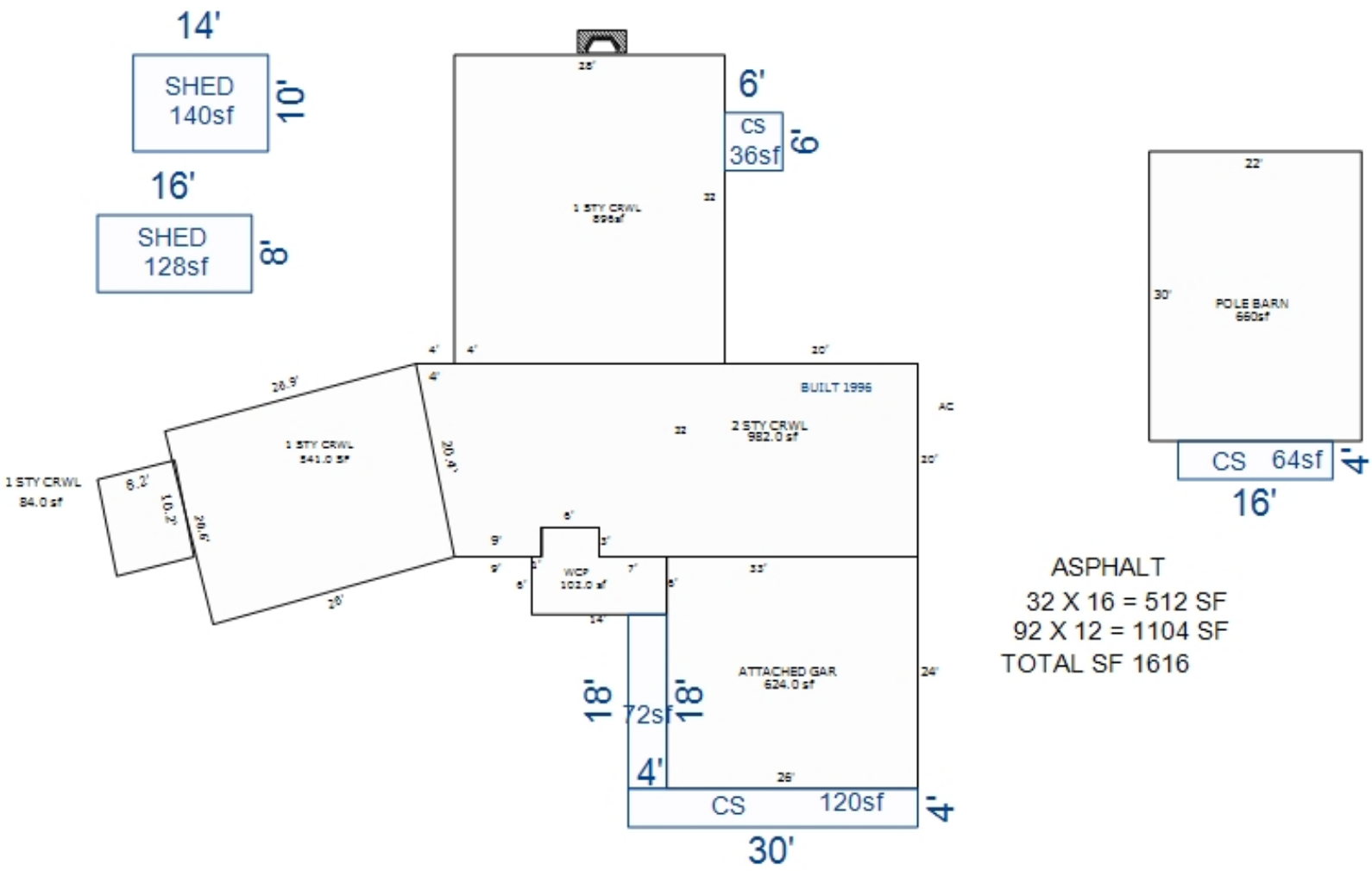

ASPHALT
32 X 16 = 512 SF
92 X 12 = 1104 SF
TOTAL SF 1616

*** Information herein deemed reliable but not guaranteed***

Parcel Number: 2410-HESL-05 Jurisdiction: GREENWOOD TWP County: WEXFORD Printed on 02/15/2024

Grantor	Grantee	Sale Price	Sale Date	Inst. Type	Terms of Sale	Liber & Page	Verified By	Prcnt. Trans.
PATTERSON, L. DEAN TRUST	PATTERSON, JOEEPH L.	1	05/26/2015	WD	09-FAMILY	675/927	DEED	0.0
PATTERSON, L. DEAN TRUST	PATTERSON, JOSEPH L	0	05/24/2015	QC	09-FAMILY	675/927	DEED	0.0
PATTERSON, JOHN L & MERLEN	PATTERSON, L. DEAN TRUST	24,000	06/02/2009	WD	09-FAMILY	621/1740	DEED	0.0

Property Address

10265 RIVER RD

Owner's Name/Address

PATTERSON, JOSEPH L
8090 CHERRY LN
CADILLAC MI 49601

Tax Description

LOT 5 EXC THE E'LY 40 FT OF N 40 FT & A PART OF LOT 4 DESC AS COM AT SE COR LOT 4 AT INTERSECTION OF N LINE LOT 5: TH N 70D09 FT W 141.14 FT; N 13D00 FT E ALONG W'LY LINE LOT 4, 20 FT; SE'LY TO POB & N 1/2 OF LOT 6 HELSEL'S SUBDIVISION GW. SEC. 8 T24N R10W -MANTON- COMBINED W/ PART OF HESL-06, 2010

Comments/Influences

Class: RESIDENTIAL-IMPROV Zoning:

School: MANTON CONSOLIDATED SCHOOLS

P.R.E. 0%

:

2024 Est TCV 205,527 TCV/TFA: 124.11

Building Permit(s)	Date	Number	Status
Res. Add/Alter/Repair	05/17/2016	PB16-0077	ENTERED

X	Improved		Vacant

	Public Improvements
	Dirt Road
X	Gravel Road
	Paved Road
	Storm Sewer
	Sidewalk
	Water
	Sewer
X	Electric
	Gas
	Curb
	Street Lights
	Standard Utilities
	Underground Utils.

	Topography of Site
	Level
X	Rolling
	Low
	High
	Landscaped
	Swamp
X	Wooded
	Pond
	Waterfront
	Ravine
	Wetland
	Flood Plain
X	OPEN

Who	When	What
GLA	10/31/2022	INSPECTION
GLA	08/07/2014	INSPECTION

Land Value Estimates for Land Table 4010.LAND VALUES

Description	Frontage	Depth	* Factors * Front	Depth	Rate	%Adj.	Reason	Value
HELSEL RIV LOW	170.00	0.00	1.0000	1.0000	315	100		53,550
170 Actual Front Feet, 0.00 Total Acres							Total Est. Land Value =	53,550

Land Improvement Cost Estimates

Description	Rate	Size	% Good	Cash Value
D/W/P: 3.5 Concrete	6.63	606	46	1,848
Total Estimated Land Improvements True Cash Value =				1,848

Year	Land Value	Building Value	Assessed Value	Board of Review	Tribunal/ Other	Taxable Value
2024	26,800	76,000	102,800			45,663C
2023	23,000	62,600	85,600			43,489C
2022	23,000	53,300	76,300			41,419C
2021	17,000	40,200	57,200			40,096C

The Equalizer. Copyright (c) 1999 - 2009. Licensed To: Township of Greenwood, County of Wexford, Michigan

*** Information herein deemed reliable but not guaranteed***

Building Type

X	Single Family
	Mobile Home
	Town Home
	Duplex
	A-Frame
X	Wood Frame

Building Style: PLAIN

Yr Built	Remodeled
0	0

Condition: Good

Room List

	Basement
	1st Floor
	2nd Floor
	Bedrooms

(1) Exterior

	Wood/Shingle
X	Aluminum/Vinyl
	Brick
X	Insulation

(2) Windows

X	Many Avg. Few	X	Large Avg. Small

	Wood Sash
	Metal Sash
X	Vinyl Sash
	Double Hung
	Horiz. Slide
	Casement
	Double Glass
	Patio Doors
X	Storms & Screens

(3) Roof

X	Gable		Gambrel
	Hip		Mansard
	Flat		Shed

X	Asphalt Shingle

Chimney:

(3) Roof (cont.)

	Eavestrough
X	Insulation
0	Front Overhang
0	Other Overhang

(4) Interior

X	Drywall Paneled		Plaster Wood T&G

Trim & Decoration

	Ex	X	Ord		Min

Size of Closets

	Lg	X	Ord		Small

Doors:		Solid	X	H.C.	

(5) Floors

Kitchen:
Other: Linoleum
Other: Carpeted

(6) Ceilings

X	Drywall

(7) Excavation

Basement: 0 S.F.
Crawl: 1656 S.F.
Slab: 0 S.F.
Height to Joists: 0.0

(8) Basement

	Conc. Block
	Poured Conc.
	Stone
	Treated Wood
	Concrete Floor

(9) Basement Finish

	Recreation SF
	Living SF
	Walkout Doors (B)
	No Floor SF
	Walkout Doors (A)

(10) Floor Support

Joists:
Unsupported Len:
Cntr.Sup:

(11) Heating/Cooling

X	Gas		Oil		Elec.
	Wood		Coal		Steam

	Forced Air w/o Ducts
X	Forced Air w/ Ducts
	Forced Hot Water
	Electric Baseboard
	Elec. Ceil. Radiant
	Radiant (in-floor)
	Electric Wall Heat
	Space Heater
	Wall/Floor Furnace
	Forced Heat & Cool
	Heat Pump
	No Heating/Cooling

X	Central Air
	Wood Furnace

(12) Electric

150	Amps Service

No./Qual. of Fixtures

	Ex.	X	Ord.		Min

No. of Elec. Outlets

	Many	X	Ave.		Few

(13) Plumbing

1	Average Fixture(s)
	3 Fixture Bath
	2 Fixture Bath
	Softener, Auto
	Softener, Manual
	Solar Water Heat
	No Plumbing
	Extra Toilet
	Extra Sink
	Separate Shower
	Ceramic Tile Floor
	Ceramic Tile Wains
	Ceramic Tub Alcove
	Vent Fan

(14) Water/Sewer

	Public Water
	Public Sewer
1	Water Well
1	1000 Gal Septic
	2000 Gal Septic

Lump Sum Items:

(15) Built-ins

	Appliance Allow.
	Cook Top
	Dishwasher
	Garbage Disposal
	Bath Heater
	Vent Fan
	Hot Tub
	Unvented Hood
	Vented Hood
	Intercom
	Jacuzzi Tub
	Jacuzzi repl.Tub
	Oven
	Microwave
	Standard Range
	Self Clean Range
	Sauna
	Trash Compactor
	Central Vacuum
	Security System

(15) Fireplaces

	Interior 1 Story
	Interior 2 Story
	2nd/Same Stack
	Two Sided
	Exterior 1 Story
	Exterior 2 Story
	Prefab 1 Story
	Prefab 2 Story
	Heat Circulator
	Raised Hearth
	Wood Stove
	Direct-Vented Gas

Class: CD
Effec. Age: 54
Floor Area: 1,656
Total Base New : 251,626 E.C.F.
Total Depr Cost: 115,751 X 1.297
Estimated T.C.V: 150,129

(16) Porches/Decks

Area	Type
96	WCP (1 Story)
70	WCP (1 Story)
72	WCP (1 Story)
16	CCP (1 Story)
208	CCP (1 Story)
296	Treated Wood

(17) Garage

Year Built:
Car Capacity:
Class: CD
Exterior: Pole
Brick Ven.: 0
Stone Ven.: 0
Common Wall: Detache
Foundation: 18 Inch
Finished ?:
Auto. Doors: 0
Mech. Doors: 0
Area: 832
% Good: 0
Storage Area: 0
No Conc. Floor: 0

Bsmnt Garage:

Carport Area:
Roof:

Cost Est. for Res. Bldg: 1 Single Family PLAIN Cls CD Blt 0
(11) Heating System: Forced Air w/ Ducts , Air Conditioning
Ground Area = 1656 SF Floor Area = 1656 SF.
Phy/Ab.Phy/Func/Econ/Comb. % Good=46/100/100/100/46

Building Areas

Stories	Exterior	Foundation	Size	Cost New	Depr. Cost
1 Story	Siding	Crawl Space	1,104		
1 Story	Siding	Crawl Space	552		
			Total:	196,604	90,439

Other Additions/Adjustments			
Water/Sewer			
1000 Gal Septic	1	4,582	2,108
Water Well, 100 Feet	1	5,680	2,613
Porches			
WCP (1 Story)	96	4,237	1,949
WCP (1 Story)	70	3,552	1,634
WCP (1 Story)	72	3,617	1,664
CCP (1 Story)	208	4,998	2,299
CCP (1 Story)	16	760	350
Deck			
Treated Wood	296	5,269	2,424
Garages			
Class: CD Exterior: Pole (Unfinished)			
Base Cost	832	19,519	8,979
Local Cost Items			
SHED	80	624	287
SHED #2	280	2,184	1,005
	Totals:	251,626	115,751

Notes:

ECF (RESIDENTIAL) 1.297 => TCV: 150,129

*** Information herein deemed reliable but not guaranteed***

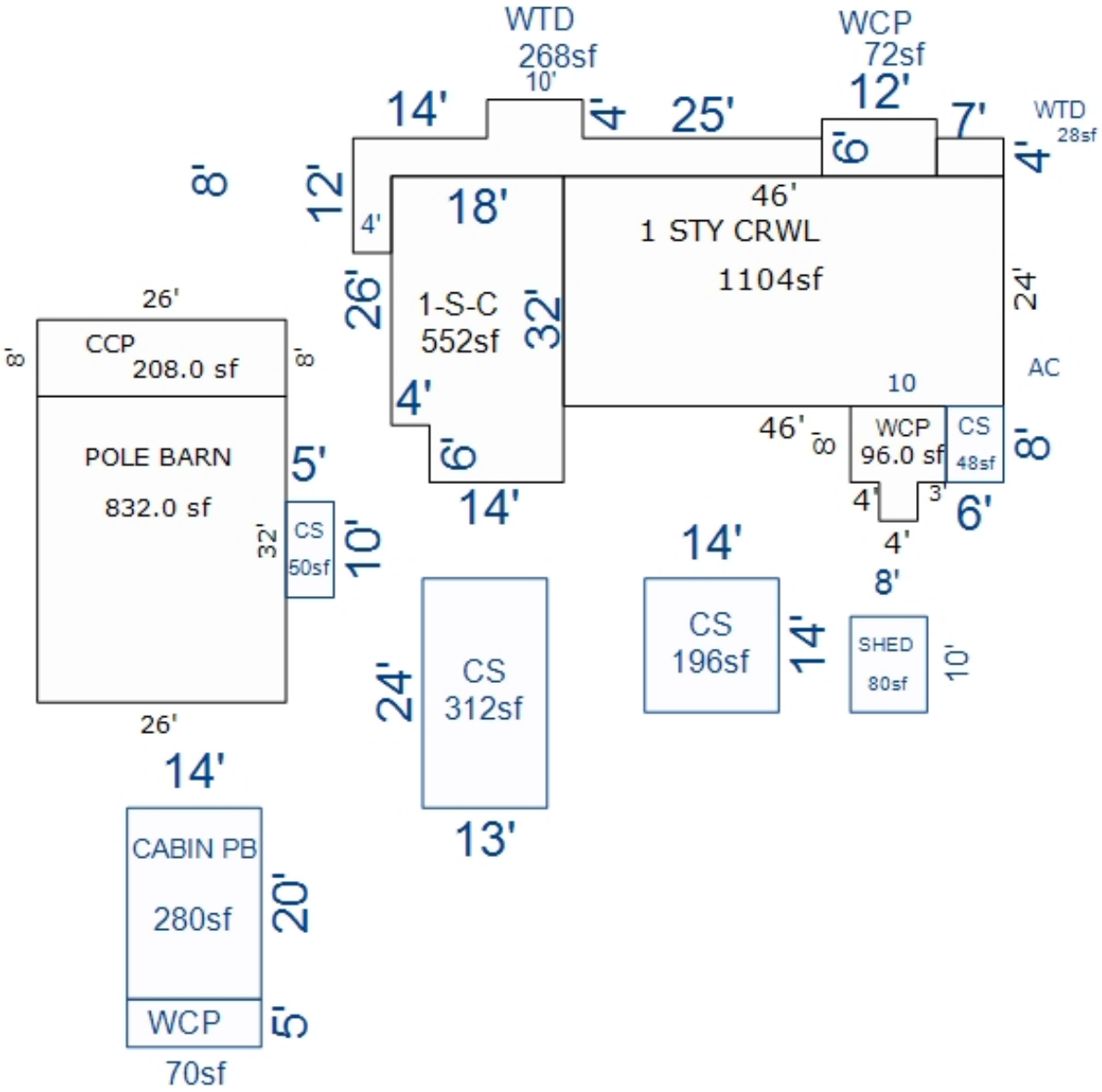

*** Information herein deemed reliable but not guaranteed***

Parcel Number: 2410-HESL-07 Jurisdiction: GREENWOOD TWP County: WEXFORD Printed on 02/15/2024

Grantor	Grantee	Sale Price	Sale Date	Inst. Type	Terms of Sale	Liber & Page	Verified By	Prcnt. Trans.
PATTERSON, JOHN L & MERLEN	PATTERSON, JAMES D	24,000	06/02/2009	WD	21-NOT USED/OTHER	621/1738	DEED	0.0
BOS, ROBERT E. & HELEN T	PATTERSON, JAMES D	112,000	07/10/2007	WD	03-ARM'S LENGTH	602/1022	DEED	100.0

Property Address

10255 RIVER RD

Owner's Name/Address

PATTERSON, JAMES D
4785 S LACHANCE RD
LAKE CITY MI 49651

Tax Description

LOT 7 & S 1/2 OF LOT 6 HELSEL'S SUBDIVISION GW. SEC. 8 T24N R10W -MANTON- COMBINED W/ PORTION OF HESL-06, 2010

Comments/Influences

Class: RESIDENTIAL-IMPROV Zoning:

School: MANTON CONSOLIDATED SCHOOLS

P.R.E. 0%

:

2024 Est TCV 194,144 TCV/TFA: 155.07

Building Permit(s)	Date	Number	Status
Res. Add/Alter/Repair	06/21/2010	PE10-18756	

X Improved | Vacant

	Public Improvements
	Dirt Road
X	Gravel Road
	Paved Road
	Storm Sewer
	Sidewalk
	Water
	Sewer
X	Electric
	Gas
	Curb
	Street Lights
	Standard Utilities
	Underground Utils.

	Topography of Site
	Level
X	Rolling
	Low
	High
	Landscaped
	Swamp
X	Wooded
	Pond
	Waterfront
	Ravine
	Wetland
	Flood Plain
X	OPEN

Who	When	What
GLA	10/31/2022	INSPECTION
GLA	06/22/2015	INSPECTION

Land Value Estimates for Land Table 4010.LAND VALUES

Description	Frontage	Depth	* Factors * Front	Depth	Rate	%Adj.	Reason	Value
HELSEL RIV LOW	150.00	366.00	1.0000	1.0000	315	100		47,250
150 Actual Front Feet, 1.26 Total Acres							Total Est. Land Value =	47,250

Land Improvement Cost Estimates

Description	Rate	Size	% Good	Cash Value
D/W/P: 3.5 Concrete	5.82	427	45	1,118
Total Estimated Land Improvements True Cash Value =				1,118

Year	Land Value	Building Value	Assessed Value	Board of Review	Tribunal/ Other	Taxable Value
2024	23,600	73,500	97,100			43,640C
2023	20,300	60,500	80,800			41,562C
2022	20,300	51,500	71,800			39,583C
2021	15,000	50,900	65,900			38,319C

The Equalizer. Copyright (c) 1999 - 2009. Licensed To: Township of Greenwood, County of Wexford, Michigan

*** Information herein deemed reliable but not guaranteed***

Building Type

X	Single Family
	Mobile Home
	Town Home
	Duplex
	A-Frame
X	Wood Frame

Building Style: RANCH

Yr Built	Remodeled
1968	0

Condition: Average

Room List

	Basement
4	1st Floor
	2nd Floor
2	Bedrooms

(1) Exterior

	Wood/Shingle
	Aluminum/Vinyl
	Brick
X	Hardboard
	Insulation

(2) Windows

	Many		Large
X	Avg.	X	Avg.
	Few		Small

X	Wood Sash
	Metal Sash
	Vinyl Sash
X	Double Hung
	Horiz. Slide
	Casement
	Double Glass
	Patio Doors
X	Storms & Screens

(3) Roof

X	Gable		Gambrel
	Hip		Mansard
	Flat		Shed

X	Asphalt Shingle

Chimney: Brick

(3) Roof (cont.)

	Eavestrough
	Insulation
2	Front Overhang
2	Other Overhang

(4) Interior

	Drywall		Plaster
	Paneled		Wood T&G

Trim & Decoration

	Ex	X	Ord		Min

Size of Closets

	Lg	X	Ord		Small

Doors:		Solid	X	H.C.	

(5) Floors

Kitchen:
Other:
Other:

(6) Ceilings

(7) Excavation

Basement: 0 S.F.
Crawl: 1252 S.F.
Slab: 0 S.F.
Height to Joists: 0.0

(8) Basement

	Conc. Block
	Poured Conc.
	Stone
	Treated Wood
	Concrete Floor

(9) Basement Finish

	Recreation	SF
	Living	SF
	Walkout Doors (B)	
	No Floor	SF
	Walkout Doors (A)	

(10) Floor Support

Joists:
Unsupported Len:
Cntr.Sup:

(11) Heating/Cooling

X	Gas		Oil		Elec.
	Wood		Coal		Steam

	Forced Air w/o Ducts
X	Forced Air w/ Ducts
	Forced Hot Water
	Electric Baseboard
	Elec. Ceil. Radiant
	Radiant (in-floor)
	Electric Wall Heat
	Space Heater
	Wall/Floor Furnace
	Forced Heat & Cool
	Heat Pump
	No Heating/Cooling

	Central Air
	Wood Furnace

(12) Electric

0	Amps Service

No./Qual. of Fixtures

	Ex.	X	Ord.		Min

No. of Elec. Outlets

	Many	X	Ave.		Few

(13) Plumbing

	Average Fixture(s)
1	3 Fixture Bath
	2 Fixture Bath
	Softener, Auto
	Softener, Manual
	Solar Water Heat
	No Plumbing
	Extra Toilet
	Extra Sink
	Separate Shower
	Ceramic Tile Floor
	Ceramic Tile Wains
	Ceramic Tub Alcove
	Vent Fan

(14) Water/Sewer

	Public Water
	Public Sewer
1	Water Well
1	1000 Gal Septic
	2000 Gal Septic

Lump Sum Items:

(15) Built-ins

	Appliance Allow.
	Cook Top
	Dishwasher
	Garbage Disposal
	Bath Heater
	Vent Fan
	Hot Tub
	Unvented Hood
	Vented Hood
	Intercom
	Jacuzzi Tub
	Jacuzzi repl.Tub
	Oven
	Microwave
	Standard Range
	Self Clean Range
	Sauna
	Trash Compactor
	Central Vacuum
	Security System

(15) Fireplaces

	Interior 1 Story
	Interior 2 Story
	2nd/Same Stack
	Two Sided
	Exterior 1 Story
	Exterior 2 Story
	Prefab 1 Story
	Prefab 2 Story
	Heat Circulator
	Raised Hearth
	Wood Stove
	Direct-Vented Gas

Class: C
Effec. Age: 54
Floor Area: 1,252
Total Base New : 244,332 E.C.F.
Total Depr Cost: 112,395 X 1.297
Estimated T.C.V: 145,776

(16) Porches/Decks

Area	Type
240	WSEP (1 Story)
77	WCP (1 Story)
112	WCP (1 Story)
204	Treated Wood
56	Treated Wood

(17) Garage

Year Built:
Car Capacity:
Class: CD
Exterior: Sid/Br
Brick Ven.: 0
Stone Ven.: 0
Common Wall: Detache
Foundation: 42 Inch
Finished ?:
Auto. Doors: 0
Mech. Doors: 0
Area: 960
% Good: 0
Storage Area: 0
No Conc. Floor: 0

Bsmnt Garage:

Carport Area:
Roof:

Cost Est. for Res. Bldg: 1 Single Family RANCH Cls C Blt 1968
(11) Heating System: Forced Air w/ Ducts
Ground Area = 1252 SF Floor Area = 1252 SF.
Phy/Ab.Phy/Func/Econ/Comb. % Good=46/100/100/100/46

Building Areas

Stories	Exterior	Foundation	Size	Cost New	Depr. Cost
1 Story	Siding	Crawl Space	1,252		
			Total:	164,131	75,501
Other Additions/Adjustments					
Water/Sewer					
1000 Gal Septic			1	4,899	2,254
Water Well, 100 Feet			1	5,849	2,691
Porches					
WSEP (1 Story)			240	11,767	5,413
WCP (1 Story)			77	4,180	1,923
WCP (1 Story)			112	5,256	2,418
Deck					
Treated Wood			204	4,221	1,942
Treated Wood			56	1,895	872
Garages					
Class: CD Exterior: Sid/Br Foundation: 42 Inch (Unfinished)					
Base Cost			960	32,525	14,961
Class: CD Exterior: Pole (Unfinished)					
Base Cost			192	6,505	2,992
Local Cost Items					
SHED			70	546	251
SHED #2			328	2,558	1,177
			Totals:	244,332	112,395

Notes:

ECF (RESIDENTIAL) 1.297 => TCV: 145,776

*** Information herein deemed reliable but not guaranteed***

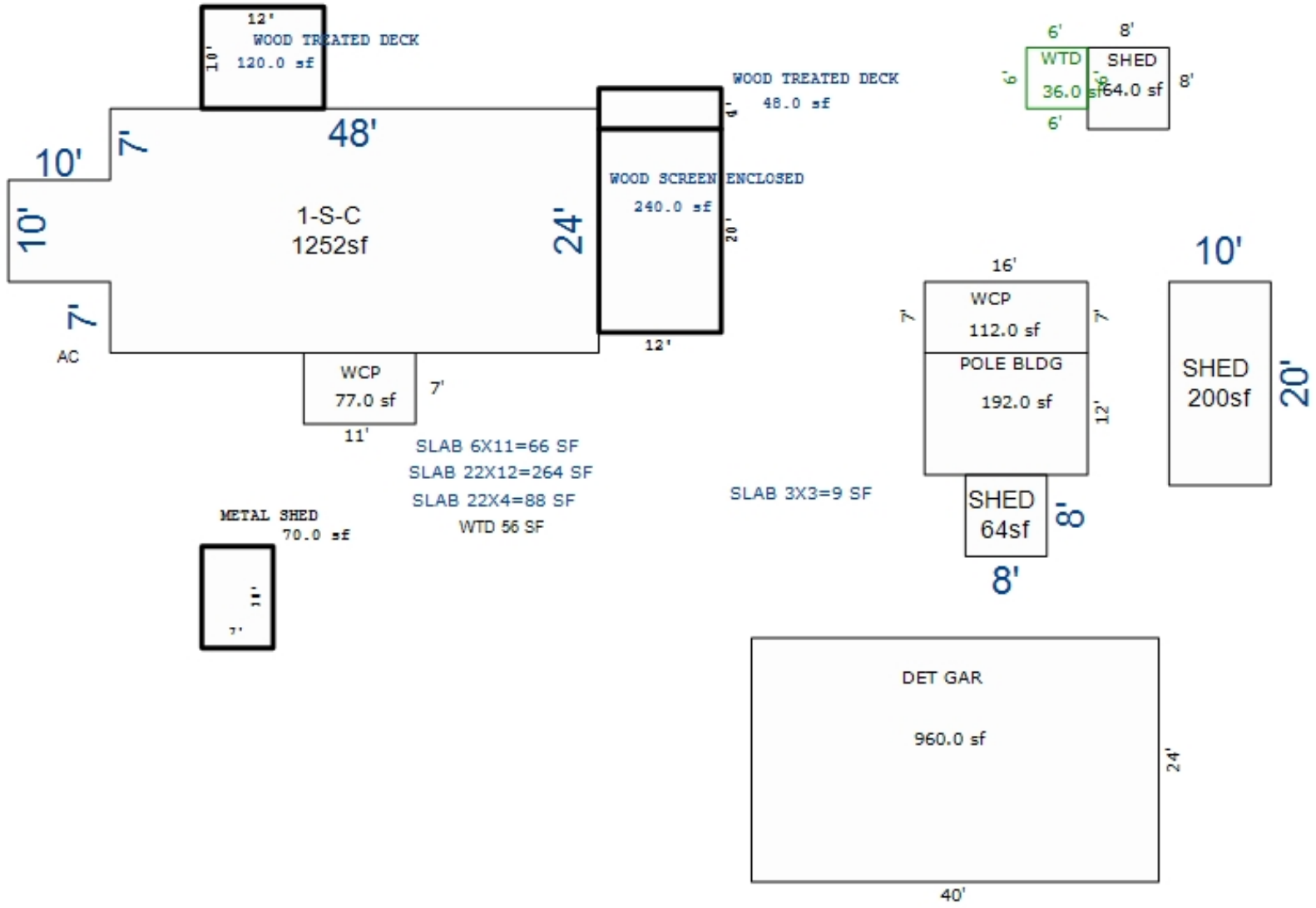

*** Information herein deemed reliable but not guaranteed***

Parcel Number: 2410-HESL-08 Jurisdiction: GREENWOOD TWP County: WEXFORD Printed on 02/15/2024

Grantor	Grantee	Sale Price	Sale Date	Inst. Type	Terms of Sale	Liber & Page	Verified By	Prcnt. Trans.
SPRENGER, M SUE	SPRENGER, M SUE LE	0	03/20/2017	QC	18-LIFE ESTATE	6801/05	DEED	0.0
PHELPS, GLEN R.	SPRENGER, M SUE	120,000	01/04/2017	WD	03-ARM'S LENGTH	679/564	DEED	100.0
CARPENTER, ROGER L.	PHELPS, GLEN R.	49,900	07/02/1992	WD	03-ARM'S LENGTH	330:144	DEED	0.0
EDWARDS, EDWARD	CARPENTER, ROGER L.	18,000	08/18/1989	WD	03-ARM'S LENGTH	316:997	DEED	0.0

Property Address

10245 RIVER RD

Owner's Name/Address

SPRENGER, M SUE LE
10245 RIVER RD
MANTON MI 49663

Tax Description

LOT 8 HELSEL'S SUBDIVISION GW. SEC. 8 T24N R10W -MANTON-

Comments/Influences

Class: RESIDENTIAL-IMPROV Zoning:

School: MANTON CONSOLIDATED SCHOOLS

P.R.E. 100% 05/01/2017

:

2024 Est TCV 143,501 TCV/TFA: 125.00

Building Permit(s)	Date	Number	Status
Pole Barn	10/10/2011	PE11-10245	
RESIDENTIAL - NEW	10/27/2004	PB12521	

X Improved | Vacant

	Public Improvements
	Dirt Road
X	Gravel Road
	Paved Road
	Storm Sewer
	Sidewalk
	Water
	Sewer
X	Electric
	Gas
	Curb
	Street Lights
	Standard Utilities
	Underground Utils.

	Topography of Site
	Level
X	Rolling
	Low
	High
	Landscaped
	Swamp
X	Wooded
	Pond
	Waterfront
	Ravine
	Wetland
	Flood Plain
X	OPEN

Who	When	What
GLA	05/13/2021	INSPECTION
GLA	08/07/2014	INSPECTION

Land Value Estimates for Land Table 4010.LAND VALUES

Description	Frontage	Depth	* Factors * Front	Depth	Rate	%Adj.	Reason	Value
HELSEL RIV LOW	100.00	0.00	1.0000	1.0000	315	100		31,500
100 Actual Front Feet, 0.00 Total Acres							Total Est. Land Value =	31,500

Land Improvement Cost Estimates

Description	Rate	Size	% Good	Cash Value
D/W/P: 3.5 Concrete	5.82	652	58	2,201
Total Estimated Land Improvements True Cash Value =				2,201

Year	Land Value	Building Value	Assessed Value	Board of Review	Tribunal/ Other	Taxable Value
2024	15,800	56,000	71,800			47,474C
2023	13,500	46,300	59,800			45,214C
2022	13,500	39,600	53,100			43,061C
2021	10,000	32,800	42,800			41,686C

The Equalizer. Copyright (c) 1999 - 2009.
Licensed To: Township of Greenwood, County of Wexford, Michigan

*** Information herein deemed reliable but not guaranteed***

Building Type

X	Single Family
	Mobile Home
	Town Home
	Duplex
	A-Frame
X	Wood Frame

Building Style: PLAIN

Yr Built	Remodeled
0	0

Condition: Good

Room List

	Basement
	1st Floor
	2nd Floor
	Bedrooms

(1) Exterior

	Wood/Shingle
X	Aluminum/Vinyl
	Brick
X	Insulation

(2) Windows

	Many		Large
X	Avg.	X	Avg.
	Few		Small

	Wood Sash
	Metal Sash
X	Vinyl Sash
	Double Hung
	Horiz. Slide
	Casement
	Double Glass
	Patio Doors
X	Storms & Screens

(3) Roof

X	Gable		Gambrel
	Hip		Mansard
	Flat		Shed
X	Asphalt Shingle		

Chimney:

(3) Roof (cont.)

	Eavestrough
X	Insulation
0	Front Overhang
0	Other Overhang

(4) Interior

X	Drywall		Plaster
	Paneled		Wood T&G

Trim & Decoration

	Ex	X	Ord		Min

Size of Closets

	Lg	X	Ord		Small

Doors:		Solid	X	H.C.	

(5) Floors

Kitchen:
Other: Linoleum
Other: Carpeted

(6) Ceilings

X	Drywall		

(7) Excavation

Basement: 0 S.F.
Crawl: 796 S.F.
Slab: 352 S.F.
Height to Joists: 0.0

(8) Basement

	Conc. Block
	Poured Conc.
	Stone
	Treated Wood
	Concrete Floor

(9) Basement Finish

	Recreation	SF
	Living	SF
	Walkout Doors	(B)
	No Floor	SF
	Walkout Doors	(A)

(10) Floor Support

Joists:
Unsupported Len:
Cntr.Sup:

(11) Heating/Cooling

X	Gas		Oil		Elec.
	Wood		Coal		Steam

	Forced Air w/o Ducts
X	Forced Air w/ Ducts
	Forced Hot Water
	Electric Baseboard
	Elec. Ceil. Radiant
	Radiant (in-floor)
	Electric Wall Heat
	Space Heater
	Wall/Floor Furnace
	Forced Heat & Cool
	Heat Pump
	No Heating/Cooling
	Central Air
	Wood Furnace

(12) Electric

150	Amps Service

No./Qual. of Fixtures

	Ex.	X	Ord.		Min

No. of Elec. Outlets

	Many	X	Ave.		Few

(13) Plumbing

	Average Fixture(s)
1	3 Fixture Bath
	2 Fixture Bath
	Softener, Auto
	Softener, Manual
	Solar Water Heat
	No Plumbing
	Extra Toilet
	Extra Sink
	Separate Shower
	Ceramic Tile Floor
	Ceramic Tile Wains
	Ceramic Tub Alcove
	Vent Fan

(14) Water/Sewer

	Public Water
	Public Sewer
1	Water Well
1	1000 Gal Septic
	2000 Gal Septic

Lump Sum Items:

(15) Built-ins

	Appliance Allow.
	Cook Top
	Dishwasher
	Garbage Disposal
	Bath Heater
	Vent Fan
	Hot Tub
	Unvented Hood
	Vented Hood
	Intercom
	Jacuzzi Tub
	Jacuzzi repl.Tub
	Oven
	Microwave
	Standard Range
	Self Clean Range
	Sauna
	Trash Compactor
	Central Vacuum
	Security System

(15) Fireplaces

	Interior 1 Story
	Interior 2 Story
	2nd/Same Stack
	Two Sided
	Exterior 1 Story
	Exterior 2 Story
	Prefab 1 Story
	Prefab 2 Story
	Heat Circulator
	Raised Hearth
	Wood Stove
	Direct-Vented Gas

Class: D
Effec. Age: 54
Floor Area: 1,148
Total Base New : 182,871 E.C.F.
Total Depr Cost: 84,657 X 1.297
Estimated T.C.V: 109,800

(16) Porches/Decks

Area	Type
112	WGEP (1 Story)
84	CCP (1 Story)
20	WPP
40	Treated Wood

(17) Garage

Year Built:
Car Capacity:
Class: CD
Exterior: Pole
Brick Ven.: 0
Stone Ven.: 0
Common Wall: Detache
Foundation: 18 Inch
Finished ?:
Auto. Doors: 0
Mech. Doors: 0
Area: 728
% Good: 0
Storage Area: 0
No Conc. Floor: 0

Bsmnt Garage:

Carport Area:
Roof:

Cost Est. for Res. Bldg: 1 Single Family PLAIN Cls D Blt 0
(11) Heating System: Forced Air w/ Ducts
Ground Area = 1148 SF Floor Area = 1148 SF.
Phy/Ab.Phy/Func/Econ/Comb. % Good=46/100/100/100/46

Building Areas

Stories	Exterior	Foundation	Size	Cost New	Depr. Cost	
1 Story	Siding	Crawl Space	796			
1 Story	Siding	Slab	352			
			Total:	121,649	55,958	
Other Additions/Adjustments						
Water/Sewer						
1000 Gal Septic			1	4,293	1,975	
Water Well, 100 Feet			1	5,545	2,551	
Porches						
WGEP (1 Story)			112	8,836	4,065	
CCP (1 Story)			84	2,040	938	
WPP			20	948	436	
Deck						
Treated Wood			40	1,543	710	
Garages						
Class: CD Exterior: Pole (Unfinished)						
Base Cost			728	17,720	8,151	
Class: D Exterior: Pole (Unfinished)						
Base Cost			728	15,492	7,126	
Local Cost Items						
POLE LEAN TO			312	1,638	950	*5
SHED			376	2,933	1,701	*5
SHED #3			30	234	96	*4
			Totals:	182,871	84,657	

Notes:

ECF (RESIDENTIAL) 1.297 => TCV: 109,800

*** Information herein deemed reliable but not guaranteed***

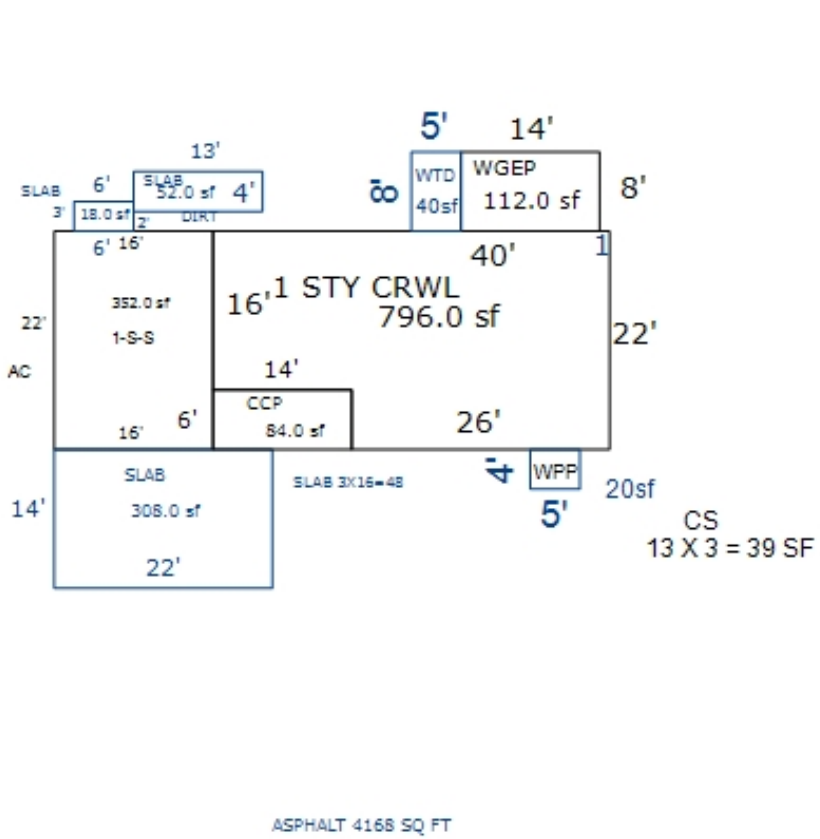

ASPHALT 4168 SQ FT

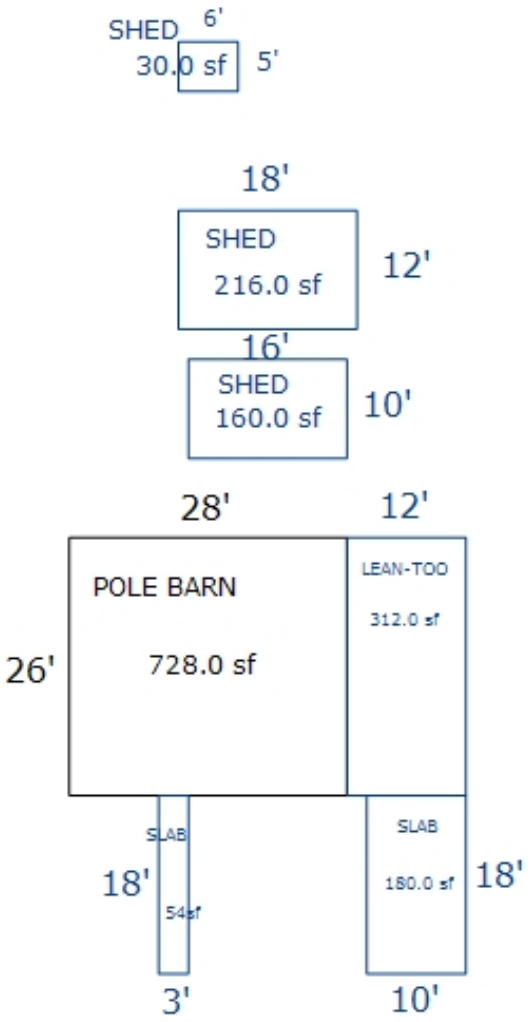

*** Information herein deemed reliable but not guaranteed***

Parcel Number: 2410-HESL-09 Jurisdiction: GREENWOOD TWP County: WEXFORD Printed on 02/15/2024

Grantor	Grantee	Sale Price	Sale Date	Inst. Type	Terms of Sale	Liber & Page	Verified By	Prcnt. Trans.
BOSTICK, JOHN C.	BOSTICK, JOHN C. & JUILE F	0	06/11/2015	WD	14-INTO/OUT OF TRUST		DEED	0.0
BOSTICK, JOHN C.& JULIE F	BOSTICK, JOHN C.& JULIE F	0	06/08/2015	QC	14-INTO/OUT OF TRUST	675/1240	DEED	0.0

Property Address
10235 RIVER RD

Owner's Name/Address
BOSTICK, JOHN C.& JULIE F TRUST
10235 RIVER RD
MANTON MI 49663

Tax Description
LOT 9 HELSEL'S SUBDIVISION GW. SEC. 8 T24N R10W -MANTON-

Comments/Influences

Class: RESIDENTIAL-IMPROV Zoning:
School: MANTON CONSOLIDATED SCHOOLS
P.R.E. 100% / /
:
2024 Est TCV 266,451 TCV/TFA: 147.54

Building Permit(s)	Date	Number	Status
Res. Add/Alter/Repair	09/21/2009	PM09-10665	
RESIDENTIAL - REMODEL	04/10/2007	PB13482	
RESIDENTIAL - REMODEL	08/27/2001	PM5211	
RESIDENTIAL - NEW	03/28/2000	PE12801	

X Improved | Vacant

Public Improvements
- Dirt Road
- X Gravel Road
- Paved Road
- Storm Sewer
- Sidewalk
- Water
- Sewer
- X Electric
- Gas
- Curb
- Street Lights
- Standard Utilities
- Underground Utils.

Topography of Site
- Level
- X Rolling
- Low
- High
- Landscaped
- Swamp
- X Wooded
- Pond
- Waterfront
- Ravine
- Wetland
- Flood Plain
- X OPEN

Who	When	What
GLA	10/31/2022	INSPECTION
GLA	06/22/2015	INSPECTION

Land Value Estimates for Land Table 4010.LAND VALUES

Description	Frontage	Depth	* Factors * Front	Depth	Rate	%Adj.	Reason	Value
HELSEL RIV LOW	100.00	0.00	1.0000	1.0000	315	100		31,500
100 Actual Front Feet, 0.00 Total Acres							Total Est. Land Value =	31,500

Land Improvement Cost Estimates

Description	Rate	Size	% Good	Cash Value
D/W/P: Asphalt Paving	3.12	7020	42	9,199
D/W/P: 4in Concrete	7.01	1980	42	5,830
Wood Frame	37.77	50	43	812
Wood Frame	24.58	224	53	2,918
Total Estimated Land Improvements True Cash Value =				18,759

Year	Land Value	Building Value	Assessed Value	Board of Review	Tribunal/ Other	Taxable Value
2024	15,800	117,400	133,200			64,765C
2023	13,500	97,600	111,100			61,681C
2022	13,500	83,500	97,000			58,744C
2021	10,000	84,400	94,400			56,868C

The Equalizer. Copyright (c) 1999 - 2009. Licensed To: Township of Greenwood, County of Wexford, Michigan

*** Information herein deemed reliable but not guaranteed***

Building Type

X	Single Family
	Mobile Home
	Town Home
	Duplex
	A-Frame
X	Wood Frame

Building Style: PLAIN

Yr Built	Remodeled
0	0

Condition: Good

Room List

	Basement
	1st Floor
	2nd Floor
	Bedrooms

(1) Exterior

	Wood/Shingle
X	Aluminum/Vinyl
	Brick
X	Insulation

(2) Windows

X	Many Avg. Few	X	Large Avg. Small

	Wood Sash
	Metal Sash
X	Vinyl Sash
	Double Hung
	Horiz. Slide
	Casement
	Double Glass
	Patio Doors
X	Storms & Screens

(3) Roof

X	Gable Hip Flat		Gambrel Mansard Shed

X	Asphalt Shingle

Chimney:

(3) Roof (cont.)

	Eavestrough
X	Insulation
0	Front Overhang
0	Other Overhang

(4) Interior

X	Drywall Paneled		Plaster Wood T&G

Trim & Decoration

	Ex	X	Ord		Min

Size of Closets

	Lg	X	Ord		Small

Doors:		Solid	X	H.C.	

(5) Floors

Kitchen:
Other: Linoleum
Other: Carpeted

(6) Ceilings

X	Drywall

(7) Excavation

Basement: 0 S.F.
Crawl: 1580 S.F.
Slab: 0 S.F.
Height to Joists: 0.0

(8) Basement

	Conc. Block
	Poured Conc.
	Stone
	Treated Wood
	Concrete Floor

(9) Basement Finish

	Recreation SF
	Living SF
	Walkout Doors (B)
	No Floor SF
	Walkout Doors (A)

(10) Floor Support

Joists:
Unsupported Len:
Cntr.Sup:

(11) Heating/Cooling

X	Gas Wood		Oil Coal		Elec. Steam	

	Forced Air w/o Ducts
X	Forced Air w/ Ducts
	Forced Hot Water
	Electric Baseboard
	Elec. Ceil. Radiant
	Radiant (in-floor)
	Electric Wall Heat
	Space Heater
	Wall/Floor Furnace
	Forced Heat & Cool
	Heat Pump
	No Heating/Cooling

	Central Air
	Wood Furnace

(12) Electric

150	Amps Service

No./Qual. of Fixtures

	Ex.	X	Ord.		Min

No. of Elec. Outlets

	Many	X	Ave.		Few

(13) Plumbing

2	Average Fixture(s)
	3 Fixture Bath
	2 Fixture Bath
	Softener, Auto
	Softener, Manual
	Solar Water Heat
	No Plumbing
	Extra Toilet
	Extra Sink
	Separate Shower
	Ceramic Tile Floor
	Ceramic Tile Wains
	Ceramic Tub Alcove
	Vent Fan

(14) Water/Sewer

	Public Water
	Public Sewer
1	Water Well
1	1000 Gal Septic
	2000 Gal Septic

Lump Sum Items:

(15) Built-ins

	Appliance Allow.
	Cook Top
	Dishwasher
	Garbage Disposal
	Bath Heater
	Vent Fan
	Hot Tub
	Unvented Hood
	Vented Hood
	Intercom
	Jacuzzi Tub
	Jacuzzi repl.Tub
	Oven
	Microwave
	Standard Range
	Self Clean Range
	Sauna
	Trash Compactor
	Central Vacuum
	Security System

(15) Fireplaces

	Interior 1 Story
	Interior 2 Story
	2nd/Same Stack
	Two Sided
	Exterior 1 Story
	Exterior 2 Story
	Prefab 1 Story
	Prefab 2 Story
	Heat Circulator
	Raised Hearth
	Wood Stove
	Direct-Vented Gas

Class: C
Effec. Age: 49
Floor Area: 1,806
Total Base New : 326,834 E.C.F.
Total Depr Cost: 166,686 X 1.297
Estimated T.C.V: 216,192

(16) Porches/Decks

Area	Type
739	WPP
40	CCP (1 Story)
176	WPP
28	CCP (1 Story)
218	Treated Wood

(17) Garage

Year Built:
Car Capacity:
Class: C
Exterior: Pole
Brick Ven.: 0
Stone Ven.: 0
Common Wall: Detache
Foundation: 18 Inch
Finished ?:
Auto. Doors: 0
Mech. Doors: 0
Area: 384
% Good: 0
Storage Area: 0
No Conc. Floor: 0

Bsmnt Garage:

Carport Area:
Roof:

Cost Est. for Res. Bldg: 1 Single Family PLAIN Cls C Blt 0
(11) Heating System: Forced Air w/ Ducts
Ground Area = 1580 SF Floor Area = 1806 SF.
Phy/Ab.Phy/Func/Econ/Comb. % Good=51/100/100/100/51

Building Areas

Stories	Exterior	Foundation	Size	Cost New	Depr. Cost
1.25 Story	Siding	Crawl Space	904		
1 Story	Siding	Crawl Space	676		
			Total:	219,451	111,919

Other Additions/Adjustments

Plumbing			
3 Fixture Bath	1	4,678	2,386
Water/Sewer			
1000 Gal Septic	1	4,899	2,498
Water Well, 100 Feet	1	5,849	2,983
Porches			
CCP (1 Story)	40	1,270	648
WPP	176	4,284	2,185
CCP (1 Story)	28	941	480
WPP	739	11,794	6,015
Deck			
Treated Wood	218	4,419	2,254
Garages			
Class: C Exterior: Pole (Unfinished)			
Base Cost	384	12,733	6,494
Class: C Exterior: Siding Foundation: 42 Inch (Unfinished)			
Base Cost	896	34,209	17,447
Class: D Exterior: Siding Foundation: 18 Inch (Unfinished)			
Base Cost	784	21,866	11,152
Local Cost Items			

<<<<< Calculations too long. See Valuation printout for complete pricing. >>>>>

*** Information herein deemed reliable but not guaranteed***

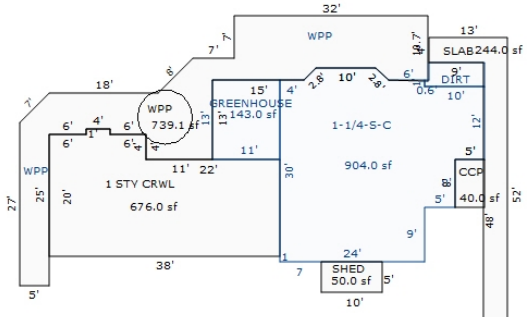

ASPHALT 20X24=480 SF
ASPHALT 100X12=1200 SF
ASPHALT 100X12=1200 SF
ASPHALT 100X12=1200 SF
ASPHALT 85X12=1020 SF
ASPHALT 60X32=1920 SF

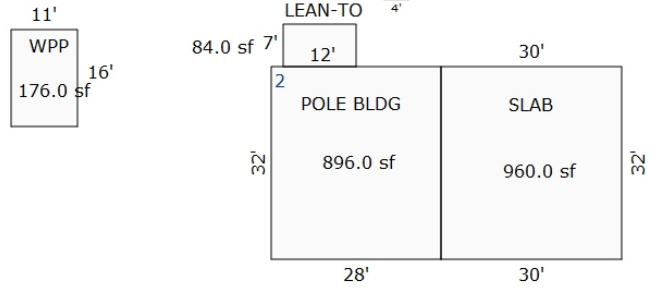

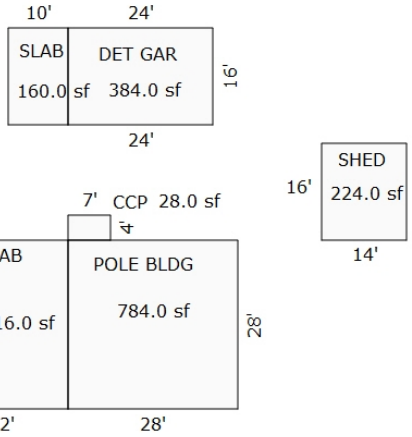

Sketch by Apex Sketch

*** Information herein deemed reliable but not guaranteed***

Parcel Number: 2410-HESL-10 Jurisdiction: GREENWOOD TWP County: WEXFORD Printed on 02/15/2024

Grantor	Grantee	Sale Price	Sale Date	Inst. Type	Terms of Sale	Liber & Page	Verified By	Prcnt. Trans.
BOSTICK, JOHN C.	BOSTICK, JOHN C. & JUILE F	0	06/11/2015	WD	21-NOT USED/OTHER		DEED	0.0
BOSTICK, JOHN C.& JULIE F	BOSTICK, JOHN C.& JULIE F	0	06/08/2015	QC	14-INTO/OUT OF TRUST	675/1240	DEED	0.0

Property Address

Class: RESIDENTIAL-VACANT Zoning:

School: MANTON CONSOLIDATED SCHOOLS

P.R.E. 100% / /

:

2024 Est TCV 31,500

Building Permit(s)	Date	Number	Status

Owner's Name/Address

BOSTICK, JOHN C.& JULIE F TRUST
10235 RIVER RD
MANTON MI 49663

	Improved	X	Vacant

Land Value Estimates for Land Table 4010.LAND VALUES

Description	Frontage	Depth	* Factors * Front	Depth	Rate	%Adj.	Reason	Value
HELSEL RIV LOW	100.00	0.00	1.0000	1.0000	315	100		31,500
100 Actual Front Feet, 0.00 Total Acres							Total Est. Land Value =	31,500

	Public Improvements
	Dirt Road
X	Gravel Road
	Paved Road
	Storm Sewer
	Sidewalk
	Water
	Sewer
X	Electric
	Gas
	Curb
	Street Lights
	Standard Utilities
	Underground Utils.

	Topography of Site
	Level
X	Rolling
	Low
	High
	Landscaped
	Swamp
X	Wooded
	Pond
	Waterfront
	Ravine
	Wetland
	Flood Plain
X	OPEN

Tax Description

LOT 10 HELSEL'S SUBDIVISION GW. SEC. 8 T24N R10W -MANTON-

Comments/Influences

Who	When	What
GLA	10/31/2022	INSPECTION

Year	Land Value	Building Value	Assessed Value	Board of Review	Tribunal/ Other	Taxable Value
2024	15,800	0	15,800			6,649C
2023	13,500	0	13,500			6,333C
2022	13,500	0	13,500			6,032C
2021	10,000	0	10,000			5,840C

The Equalizer. Copyright (c) 1999 - 2009.
Licensed To: Township of Greenwood, County of Wexford, Michigan

*** Information herein deemed reliable but not guaranteed***

Parcel Number: 2410-HESL-11 Jurisdiction: GREENWOOD TWP County: WEXFORD Printed on 02/15/2024

Grantor	Grantee	Sale Price	Sale Date	Inst. Type	Terms of Sale	Liber & Page	Verified By	Prcnt. Trans.
WRIGHT, ROBERT C	WRIGHT, ROBERT C TRUST	1	12/27/2019	QC	14-INTO/OUT OF TRUST	687 /1592	DEED	0.0
WRIGHT, WILLIAM C TRUST	WRIGHT, ROBERT C	1	07/11/2019	QC	09-FAMILY	6871/591	DEED	0.0
WHITFORD, NATHAN E , REVA	WHITFORD FAMILY TRUST	100	01/26/2017	WD	14-INTO/OUT OF TRUST	679/1300	DEED	0.0
WRIGHT, PATTY L.	WRIGHT, WILLIAM C TRUST	0	12/11/2015	QC	14-INTO/OUT OF TRUST	PTA	DEED	0.0

Property Address

10125 RIVER RD

Owner's Name/Address

WRIGHT, ROBERT C TRUST
9187 E POTTER RD
DAVISON MI 48423

Tax Description

LOT 11 HELSEL'S SUBDIVISION GW. SEC. 8 T24N R10W -MANTON-

Comments/Influences

Class: RESIDENTIAL-IMPROV Zoning:

School: MANTON CONSOLIDATED SCHOOLS

P.R.E. 0%

:

2024 Est TCV 213,677 TCV/TFA: 127.19

Building Permit(s)	Date	Number	Status

X Improved | Vacant

	Public Improvements
	Dirt Road
X	Gravel Road
	Paved Road
	Storm Sewer
	Sidewalk
	Water
	Sewer
X	Electric
	Gas
	Curb
	Street Lights
	Standard Utilities
	Underground Utils.

	Topography of Site
	Level
X	Rolling
	Low
	High
	Landscaped
	Swamp
X	Wooded
	Pond
	Waterfront
	Ravine
	Wetland
	Flood Plain
X	OPEN

Who	When	What
GLA	05/13/2021	INSPECTION

Land Value Estimates for Land Table 4010.LAND VALUES

Description	Frontage	Depth	* Factors * Front	Depth	Rate	%Adj.	Reason	Value
HELSEL RIV LOW	100.00	0.00	1.0000	1.0000	315	100		31,500
100 Actual Front Feet, 0.00 Total Acres							Total Est. Land Value =	31,500

Land Improvement Cost Estimates

Description	Rate	Size	% Good	Cash Value
D/W/P: 4in Concrete	7.01	96	45	303
Total Estimated Land Improvements True Cash Value =				303

Year	Land Value	Building Value	Assessed Value	Board of Review	Tribunal/ Other	Taxable Value
2024	15,800	91,000	106,800			59,958C
2023	13,500	74,600	88,100			57,103C
2022	13,500	63,200	76,700			54,384C
2021	10,000	64,100	74,100			52,647C

The Equalizer. Copyright (c) 1999 - 2009. Licensed To: Township of Greenwood, County of Wexford, Michigan

*** Information herein deemed reliable but not guaranteed***

Building Type

X	Single Family
	Mobile Home
	Town Home
	Duplex
	A-Frame
X	Wood Frame

Building Style: PLAIN

Yr Built	Remodeled
0	0

Condition: Good

Room List

	Basement
	1st Floor
	2nd Floor
	Bedrooms

(1) Exterior

	Wood/Shingle
X	Aluminum/Vinyl
	Brick
X	Insulation

(2) Windows

	Many		Large
X	Avg.	X	Avg.
	Few		Small

	Wood Sash
	Metal Sash
X	Vinyl Sash
	Double Hung
	Horiz. Slide
	Casement
	Double Glass
	Patio Doors
X	Storms & Screens

(3) Roof

X	Gable		Gambrel
	Hip		Mansard
	Flat		Shed

X	Asphalt Shingle

Chimney:

(3) Roof (cont.)

	Eavestrough
X	Insulation
0	Front Overhang
0	Other Overhang

(4) Interior

X	Drywall		Plaster
	Paneled		Wood T&G

Trim & Decoration

	Ex	X	Ord		Min

Size of Closets

	Lg	X	Ord		Small

Doors:		Solid	X	H.C.	

(5) Floors

Kitchen:
Other: Linoleum
Other: Carpeted

(6) Ceilings

X	Drywall

(7) Excavation

Basement: 0 S.F.
Crawl: 1152 S.F.
Slab: 0 S.F.
Height to Joists: 0.0

(8) Basement

	Conc. Block
	Poured Conc.
	Stone
	Treated Wood
	Concrete Floor

(9) Basement Finish

	Recreation SF
	Living SF
	Walkout Doors (B)
	No Floor SF
	Walkout Doors (A)

(10) Floor Support

Joists:
Unsupported Len:
Cntr.Sup:

(11) Heating/Cooling

X	Gas		Oil		Elec.
	Wood		Coal		Steam

	Forced Air w/o Ducts
X	Forced Air w/ Ducts
	Forced Hot Water
	Electric Baseboard
	Elec. Ceil. Radiant
	Radiant (in-floor)
	Electric Wall Heat
	Space Heater
	Wall/Floor Furnace
	Forced Heat & Cool
	Heat Pump
	No Heating/Cooling

	Central Air
	Wood Furnace

(12) Electric

150	Amps Service

No./Qual. of Fixtures

	Ex.	X	Ord.		Min

No. of Elec. Outlets

	Many	X	Ave.		Few

(13) Plumbing

	Average Fixture(s)
1	3 Fixture Bath
	2 Fixture Bath
	Softener, Auto
	Softener, Manual
	Solar Water Heat
	No Plumbing
	Extra Toilet
	Extra Sink
	Separate Shower
	Ceramic Tile Floor
	Ceramic Tile Wains
	Ceramic Tub Alcove
	Vent Fan

(14) Water/Sewer

	Public Water
	Public Sewer
1	Water Well
1	1000 Gal Septic
	2000 Gal Septic

Lump Sum Items:

(15) Built-ins

	Appliance Allow.
	Cook Top
	Dishwasher
	Garbage Disposal
	Bath Heater
	Vent Fan
	Hot Tub
	Unvented Hood
	Vented Hood
	Intercom
	Jacuzzi Tub
	Jacuzzi repl.Tub
	Oven
	Microwave
	Standard Range
	Self Clean Range
	Sauna
	Trash Compactor
	Central Vacuum
	Security System

(15) Fireplaces

	Interior 1 Story
	Interior 2 Story
	2nd/Same Stack
	Two Sided
	Exterior 1 Story
	Exterior 2 Story
	Prefab 1 Story
	Prefab 2 Story
	Heat Circulator
	Raised Hearth
	Wood Stove
	Direct-Vented Gas

Class: CD
Effec. Age: 42
Floor Area: 1,680
Total Base New : 241,770 E.C.F.
Total Depr Cost: 140,227 X 1.297
Estimated T.C.V: 181,874

(16) Porches/Decks

Area	Type
51	WPP
276	WPP
28	WPP
280	WGEP (1 Story)

(17) Garage

Year Built:
Car Capacity:
Class: CD
Exterior: Siding
Brick Ven.: 0
Stone Ven.: 0
Common Wall: Detache
Foundation: 18 Inch
Finished ?:
Auto. Doors: 0
Mech. Doors: 0
Area: 864
% Good: 0
Storage Area: 0
No Conc. Floor: 0

Bsmnt Garage:

Carport Area:
Roof:

Cost Est. for Res. Bldg: 1 Single Family PLAIN Cls CD Blt 0
(11) Heating System: Forced Air w/ Ducts
Ground Area = 1152 SF Floor Area = 1680 SF.
Phy/Ab.Phy/Func/Econ/Comb. % Good=58/100/100/100/58
Building Areas

Stories	Exterior	Foundation	Size	Cost New	Depr. Cost
1 Story	Siding	Crawl Space	672		
2 Story	Siding	Crawl Space	480		
1 Story	Siding	Overhang	48		
			Total:	179,494	104,107

Other Additions/Adjustments

Water/Sewer			
1000 Gal Septic	1	4,582	2,658
Water Well, 100 Feet	1	5,680	3,294
Porches			
WPP	51	1,881	1,091
WPP	276	4,496	2,608
WPP	28	1,402	813
WGEP (1 Story)	280	17,416	10,101
Garages			
Class: CD Exterior: Siding Foundation: 18 Inch (Unfinished)			
Base Cost	864	26,819	15,555
	Totals:	241,770	140,227

Notes:

ECF (RESIDENTIAL) 1.297 => TCV: 181,874

*** Information herein deemed reliable but not guaranteed***

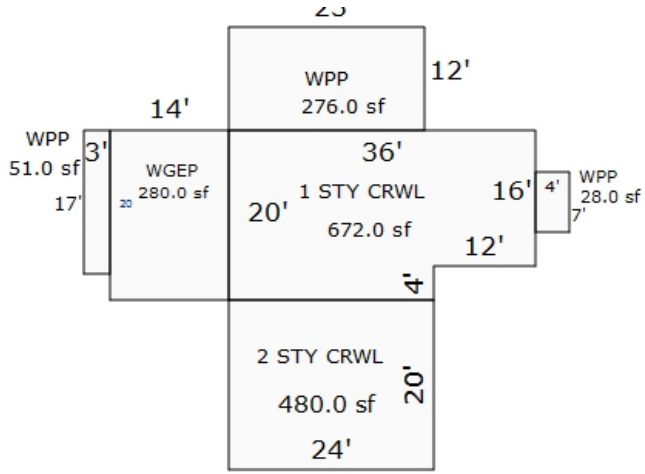

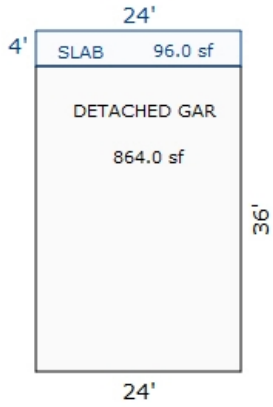

Sketch by Apex Sketch

*** Information herein deemed reliable but not guaranteed***

Parcel Number: 2410-HESL-12 Jurisdiction: GREENWOOD TWP County: WEXFORD Printed on 02/15/2024

Grantor	Grantee	Sale Price	Sale Date	Inst. Type	Terms of Sale	Liber & Page	Verified By	Prcnt. Trans.
DAVIS, JOHN & VIRGINIA TRU	DAVIS, JOHN K & RICKIE O I	0	08/16/2007	QC	09-FAMILY	603/1476	DEED	100.0

Property Address

10119 RIVER RD

Owner's Name/Address

DAVIS, JOHN K & RICKIE O DAVIS
216 E CHURCH ST
CLINTON MI 49236

Tax Description

LOT 12 HELSEL'S SUBDIVISION GW. SEC. 8 T24N R10W -MANTON-

Comments/Influences

Class: RESIDENTIAL-IMPROV Zoning:

School: MANTON CONSOLIDATED SCHOOLS

P.R.E. 0%

:

2024 Est TCV 108,745 TCV/TFA: 162.31

Building Permit(s)	Date	Number	Status

X Improved | Vacant

	Public Improvements
	Dirt Road
X	Gravel Road
	Paved Road
	Storm Sewer
	Sidewalk
	Water
	Sewer
X	Electric
	Gas
	Curb
	Street Lights
	Standard Utilities
	Underground Utils.

	Topography of Site
	Level
X	Rolling
	Low
	High
	Landscaped
	Swamp
X	Wooded
	Pond
	Waterfront
	Ravine
	Wetland
	Flood Plain
X	OPEN

Who	When	What
GLA	05/13/2021	INSPECTION

Land Value Estimates for Land Table 4010.LAND VALUES

Description	Frontage	Depth	* Factors * Front	Depth	Rate	%Adj.	Reason	Value
HELSEL RIV LOW	100.00	0.00	1.0000	1.0000	315	100		31,500
100 Actual Front Feet, 0.00 Total Acres							Total Est. Land Value =	31,500

Land Improvement Cost Estimates

Description	Rate	Size	% Good	Cash Value
D/W/P: 3.5 Concrete	6.63	223	45	665
Total Estimated Land Improvements True Cash Value =				665

Year	Land Value	Building Value	Assessed Value	Board of Review	Tribunal/ Other	Taxable Value
2024	15,800	38,600	54,400			32,991C
2023	13,500	31,900	45,400			31,420C
2022	13,500	27,200	40,700			29,924C
2021	10,000	27,100	37,100			28,969C

The Equalizer. Copyright (c) 1999 - 2009. Licensed To: Township of Greenwood, County of Wexford, Michigan

*** Information herein deemed reliable but not guaranteed***

Building Type

X	Single Family
	Mobile Home
	Town Home
	Duplex
	A-Frame
X	Wood Frame

Building Style: RANCH

Yr Built	Remodeled
0	0

Condition: Good

Room List

	Basement
	1st Floor
	2nd Floor
	Bedrooms

(1) Exterior

	Wood/Shingle
X	Aluminum/Vinyl
	Brick
X	Insulation

(2) Windows

	Many		Large
X	Avg.	X	Avg.
	Few		Small

	Wood Sash
	Metal Sash
X	Vinyl Sash
	Double Hung
	Horiz. Slide
	Casement
	Double Glass
	Patio Doors
X	Storms & Screens

(3) Roof

X	Gable		Gambrel
	Hip		Mansard
	Flat		Shed
X	Asphalt Shingle		

Chimney:

(3) Roof (cont.)

	Eavestrough
X	Insulation
0	Front Overhang
0	Other Overhang

(4) Interior

X	Drywall		Plaster
	Paneled		Wood T&G

Trim & Decoration

	Ex	X	Ord		Min

Size of Closets

	Lg	X	Ord		Small

Doors:		Solid	X	H.C.	

(5) Floors

Kitchen:
Other: Linoleum
Other: Carpeted

(6) Ceilings

X	Drywall		

(7) Excavation

Basement: 0 S.F.
Crawl: 670 S.F.
Slab: 0 S.F.
Height to Joists: 0.0

(8) Basement

	Conc. Block
	Poured Conc.
	Stone
	Treated Wood
	Concrete Floor

(9) Basement Finish

	Recreation SF
	Living SF
	Walkout Doors (B)
	No Floor SF
	Walkout Doors (A)

(10) Floor Support

Joists:
Unsupported Len:
Cntr.Sup:

(11) Heating/Cooling

X	Gas		Oil		Elec.
	Wood		Coal		Steam

	Forced Air w/o Ducts
X	Forced Air w/ Ducts
	Forced Hot Water
	Electric Baseboard
	Elec. Ceil. Radiant
	Radiant (in-floor)
	Electric Wall Heat
	Space Heater
	Wall/Floor Furnace
	Forced Heat & Cool
	Heat Pump
	No Heating/Cooling
	Central Air
	Wood Furnace

(12) Electric

150	Amps Service

No./Qual. of Fixtures

	Ex.	X	Ord.		Min

No. of Elec. Outlets

	Many	X	Ave.		Few

(13) Plumbing

	Average Fixture(s)
1	3 Fixture Bath
	2 Fixture Bath
	Softener, Auto
	Softener, Manual
	Solar Water Heat
	No Plumbing
	Extra Toilet
	Extra Sink
	Separate Shower
	Ceramic Tile Floor
	Ceramic Tile Wains
	Ceramic Tub Alcove
	Vent Fan

(14) Water/Sewer

	Public Water
	Public Sewer
1	Water Well
1	1000 Gal Septic
	2000 Gal Septic

Lump Sum Items:

(15) Built-ins

	Appliance Allow.
	Cook Top
	Dishwasher
	Garbage Disposal
	Bath Heater
	Vent Fan
	Hot Tub
	Unvented Hood
	Vented Hood
	Intercom
	Jacuzzi Tub
	Jacuzzi repl.Tub
	Oven
	Microwave
	Standard Range
	Self Clean Range
	Sauna
	Trash Compactor
	Central Vacuum
	Security System

(15) Fireplaces

	Interior 1 Story
	Interior 2 Story
	2nd/Same Stack
	Two Sided
	Exterior 1 Story
	Exterior 2 Story
	Prefab 1 Story
	Prefab 2 Story
	Heat Circulator
	Raised Hearth
	Wood Stove
	Direct-Vented Gas

Class: CD
Effec. Age: 54
Floor Area: 670
Total Base New : 128,669 E.C.F.
Total Depr Cost: 59,044 X 1.297
Estimated T.C.V: 76,580

(16) Porches/Decks

Area	Type
78	WGEP (1 Story)
246	WPP

(17) Garage

Year Built:
Car Capacity:
Class: D
Exterior: Siding
Brick Ven.: 0
Stone Ven.: 0
Common Wall: Detache
Foundation: 42 Inch
Finished ?:
Auto. Doors: 0
Mech. Doors: 0
Area: 592
% Good: 0
Storage Area: 0
No Conc. Floor: 0

Bsmnt Garage:

Carport Area:
Roof:

Cost Est. for Res. Bldg: 1 Single Family RANCH Cls CD Blt 0
(11) Heating System: Forced Air w/ Ducts
Ground Area = 670 SF Floor Area = 670 SF.
Phy/Ab.Phy/Func/Econ/Comb. % Good=46/100/100/100/46
Building Areas

Stories	Exterior	Foundation	Size	Cost New	Depr. Cost	
1 Story	Siding	Crawl Space	670			
			Total:	83,720	38,511	
Other Additions/Adjustments						
Water/Sewer						
1000 Gal Septic			1	4,582	2,108	
Water Well, 100 Feet			1	5,680	2,613	
Porches						
WGEP (1 Story)			78	7,511	3,455	
WPP			246	4,408	2,028	
Garages						
Class: D Exterior: Siding Foundation: 42 Inch (Unfinished)						
Base Cost			592	19,873	9,142	
Local Cost Items						
WOOD LEAN TO			224	1,366	560	*4
SHED			196	1,529	627	*4
			Totals:	128,669	59,044	

Notes:
ECF (RESIDENTIAL) 1.297 => TCV: 76,580

*** Information herein deemed reliable but not guaranteed***

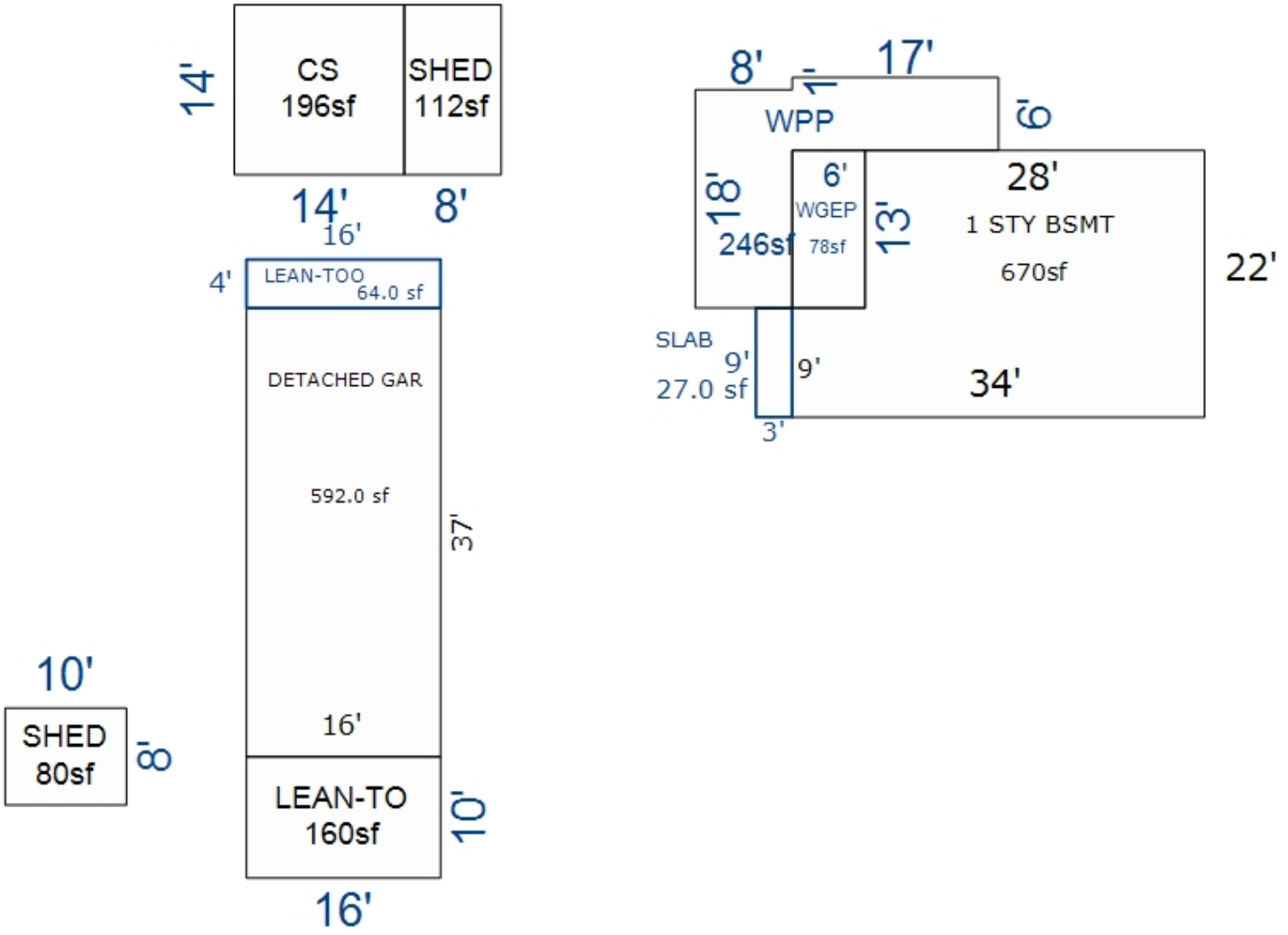

*** Information herein deemed reliable but not guaranteed***

Parcel Number: 2410-HESL-13 Jurisdiction: GREENWOOD TWP County: WEXFORD Printed on 02/15/2024

Grantor	Grantee	Sale Price	Sale Date	Inst. Type	Terms of Sale	Liber & Page	Verified By	Prcnt. Trans.

Property Address	Class: RESIDENTIAL-IMPROV	Zoning:	Building Permit(s)	Date	Number	Status
10111 RIVER RD	School: MANTON CONSOLIDATED SCHOOLS					
	P.R.E. 0%					
Owner's Name/Address	:					
PARKER-DODGE, KATHY (ET AL) 235 MIDFOREST LODGE PRUDENVILLE MI 48651	2024 Est TCV 124,856 TCV/TFA: 144.51					

X Improved | Vacant

Land Value Estimates for Land Table 4010.LAND VALUES

Description	Frontage	Depth	* Factors * Front	Depth	Rate	%Adj.	Reason	Value
HELSEL RIV LOW	100.00	0.00	1.0000	1.0000	315	100		31,500
100 Actual Front Feet, 0.00 Total Acres							Total Est. Land Value =	31,500

Land Improvement Cost Estimates

Description	Rate	Size	% Good	Cash Value
Wood Frame	22.35	120	41	1,100
Total Estimated Land Improvements True Cash Value =				1,100

Public Improvements

- X Gravel Road
- X Electric
- X OPEN

Topography of Site

- X Rolling
- X Wooded

Year	Land Value	Building Value	Assessed Value	Board of Review	Tribunal/ Other	Taxable Value
2024	15,800	46,600	62,400			30,378C
2023	13,500	38,300	51,800			28,932C
2022	13,500	32,400	45,900			27,555C
2021	10,000	32,800	42,800			26,675C

Tax Description

LOT 13 HELSEL'S SUBDIVISION GW. SEC. 8 T24N R10W -MANTON-

Comments/Influences

Who	When	What
GLA	05/13/2021	INSPECTION

The Equalizer. Copyright (c) 1999 - 2009. Licensed To: Township of Greenwood, County of Wexford, Michigan

*** Information herein deemed reliable but not guaranteed***

Building Type

X	Single Family
	Mobile Home
	Town Home
	Duplex
	A-Frame
X	Wood Frame

Building Style: PLAIN

Yr Built	Remodeled
0	0

Condition: Good

Room List

	Basement
	1st Floor
	2nd Floor
	Bedrooms

(1) Exterior

	Wood/Shingle
X	Aluminum/Vinyl
	Brick
X	Insulation

(2) Windows

	Many		Large
X	Avg.	X	Avg.
	Few		Small

	Wood Sash
	Metal Sash
X	Vinyl Sash
	Double Hung
	Horiz. Slide
	Casement
	Double Glass
	Patio Doors
X	Storms & Screens

(3) Roof

X	Gable		Gambrel
	Hip		Mansard
	Flat		Shed

X	Asphalt Shingle

Chimney:

(3) Roof (cont.)

	Eavestrough
X	Insulation
0	Front Overhang
0	Other Overhang

(4) Interior

X	Drywall		Plaster
	Paneled		Wood T&G

Trim & Decoration

	Ex	X	Ord		Min

Size of Closets

	Lg	X	Ord		Small

Doors:		Solid	X	H.C.	

(5) Floors

Kitchen:
Other: Linoleum
Other: Carpeted

(6) Ceilings

X	Drywall		

(7) Excavation

Basement: 0 S.F.
Crawl: 864 S.F.
Slab: 0 S.F.
Height to Joists: 0.0

(8) Basement

	Conc. Block
	Poured Conc.
	Stone
	Treated Wood
	Concrete Floor

(9) Basement Finish

	Recreation SF
	Living SF
	Walkout Doors (B)
	No Floor SF
	Walkout Doors (A)

(10) Floor Support

Joists:
Unsupported Len:
Cntr.Sup:

(11) Heating/Cooling

X	Gas		Oil		Elec.
	Wood		Coal		Steam

	Forced Air w/o Ducts
X	Forced Air w/ Ducts
	Forced Hot Water
	Electric Baseboard
	Elec. Ceil. Radiant
	Radiant (in-floor)
	Electric Wall Heat
	Space Heater
	Wall/Floor Furnace
	Forced Heat & Cool
	Heat Pump
	No Heating/Cooling

	Central Air
	Wood Furnace

(12) Electric

150	Amps Service

No./Qual. of Fixtures

	Ex.	X	Ord.		Min

No. of Elec. Outlets

	Many	X	Ave.		Few

(13) Plumbing

	Average Fixture(s)
1	3 Fixture Bath
	2 Fixture Bath
	Softener, Auto
	Softener, Manual
	Solar Water Heat
	No Plumbing
	Extra Toilet
	Extra Sink
	Separate Shower
	Ceramic Tile Floor
	Ceramic Tile Wains
	Ceramic Tub Alcove
	Vent Fan

(14) Water/Sewer

	Public Water
	Public Sewer
1	Water Well
1	1000 Gal Septic
	2000 Gal Septic

Lump Sum Items:

(15) Built-ins

	Appliance Allow.
	Cook Top
	Dishwasher
	Garbage Disposal
	Bath Heater
	Vent Fan
	Hot Tub
	Unvented Hood
	Vented Hood
	Intercom
	Jacuzzi Tub
	Jacuzzi repl.Tub
	Oven
	Microwave
	Standard Range
	Self Clean Range
	Sauna
	Trash Compactor
	Central Vacuum
	Security System

(15) Fireplaces

	Interior 1 Story
	Interior 2 Story
	2nd/Same Stack
	Two Sided
	Exterior 1 Story
	Exterior 2 Story
	Prefab 1 Story
	Prefab 2 Story
	Heat Circulator
	Raised Hearth
	Wood Stove
	Direct-Vented Gas

Class: D
Effec. Age: 39
Floor Area: 864
Total Base New : 116,607 E.C.F.
Total Depr Cost: 71,130 X 1.297
Estimated T.C.V: 92,256

(16) Porches/Decks

Area	Type
216	WPP
28	WPP

(17) Garage

Year Built:
Car Capacity:
Class:
Exterior:
Brick Ven.:
Stone Ven.:
Common Wall:
Foundation:
Finished ?:
Auto. Doors:
Mech. Doors:
Area:
% Good:
Storage Area:
No Conc. Floor:

Bsmnt Garage:

Carport Area:
Roof:

Cost Est. for Res. Bldg: 1 Single Family PLAIN Cls D Blt 0
(11) Heating System: Forced Air w/ Ducts
Ground Area = 864 SF Floor Area = 864 SF.
Phy/Ab.Phy/Func/Econ/Comb. % Good=61/100/100/100/61
Building Areas

Stories	Exterior	Foundation	Size	Cost New	Depr. Cost
1+ Story	Siding	Crawl Space	864		
			Total:	101,697	62,035
Other Additions/Adjustments					
Water/Sewer					
1000 Gal Septic			1	4,293	2,619
Water Well, 100 Feet			1	5,545	3,382
Porches					
WPP			216	3,756	2,291
WPP			28	1,316	803
			Totals:	116,607	71,130

Notes:
ECF (RESIDENTIAL) 1.297 => TCV: 92,256

*** Information herein deemed reliable but not guaranteed***

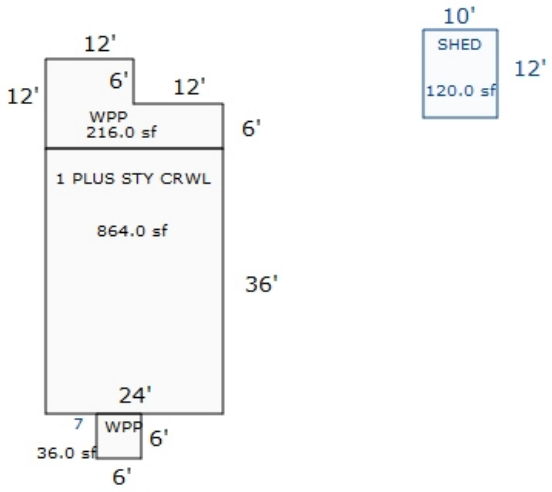

Sketch by Apex Sketch

*** Information herein deemed reliable but not guaranteed***

Parcel Number: 2410-HESL-14 Jurisdiction: GREENWOOD TWP County: WEXFORD Printed on 02/15/2024

Grantor	Grantee	Sale Price	Sale Date	Inst. Type	Terms of Sale	Liber & Page	Verified By	Prcnt. Trans.
RICE, MARYBETH	RICE, MARYBETH, GLENN RICE	0	06/25/2015	QC	09-FAMILY	675/1577	DEED	0.0
GAWRONSKI, EUGENE & RICE,	RICE, MARYBETH	1	10/31/2001	QC	09-FAMILY	384:517	DEED	0.0
FURR, DONALD ETAL	RICE, MARYBETH & E GAWRONS	1	07/25/2001	QC	09-FAMILY	382:193	DEED	0.0

Property Address

10095 RIVER RD

Owner's Name/Address

RICE, MARYBETH, GLENN RICE
& BRADLEY A RICE
P O BOX 243
FRANKFORT MI 49635

Tax Description

LOT 14 HELSEL'S SUBDIVISION GW. SEC. 8 T24N R10W -MANTON-

Comments/Influences

Class: RESIDENTIAL-IMPROV Zoning:

School: MANTON CONSOLIDATED SCHOOLS

P.R.E. 0%

:

2024 Est TCV 122,466 TCV/TFA: 159.46

Building Permit(s)	Date	Number	Status
Foundation	10/28/2015	PB15-0242	COMPLETE

X Improved | Vacant

	Public Improvements
	Dirt Road
X	Gravel Road
	Paved Road
	Storm Sewer
	Sidewalk
	Water
	Sewer
X	Electric
	Gas
	Curb
	Street Lights
	Standard Utilities
	Underground Utils.

	Topography of Site
	Level
X	Rolling
	Low
	High
	Landscaped
	Swamp
X	Wooded
	Pond
	Waterfront
	Ravine
	Wetland
	Flood Plain
X	OPEN

Who	When	What
GLA	10/31/2022	INSPECTION
GLA	06/22/2015	INSPECTION

The Equalizer. Copyright (c) 1999 - 2009.
Licensed To: Township of Greenwood, County of Wexford, Michigan

Land Value Estimates for Land Table 4010.LAND VALUES

Description	Frontage	Depth	* Factors * Front	Depth	Rate	%Adj.	Reason	Value
HELSEL RIV LOW	100.00	0.00	1.0000	1.0000	315	100		31,500
100 Actual Front Feet, 0.00 Total Acres							Total Est. Land Value =	31,500

Land Improvement Cost Estimates

Description	Rate	Size	% Good	Cash Value
D/W/P: 4in Concrete	7.01	104	45	328
D/W/P: 4in Concrete	7.01	136	45	429
Wood Frame	28.20	120	41	1,387
Total Estimated Land Improvements True Cash Value =				2,144

Year	Land Value	Building Value	Assessed Value	Board of Review	Tribunal/ Other	Taxable Value
2024	15,800	45,400	61,200			36,757C
2023	13,500	37,500	51,000			35,007C
2022	13,500	31,900	45,400			33,340C
2021	10,000	32,300	42,300			32,275C

*** Information herein deemed reliable but not guaranteed***

Building Type

X	Single Family
	Mobile Home
	Town Home
	Duplex
	A-Frame
X	Wood Frame

Building Style: PLAIN

Yr Built	Remodeled
0	0

Condition: Good

Room List

	Basement
	1st Floor
	2nd Floor
	Bedrooms

(1) Exterior

	Wood/Shingle
X	Aluminum/Vinyl
	Brick
X	Insulation

(2) Windows

	Many		Large
X	Avg.	X	Avg.
	Few		Small

	Wood Sash
	Metal Sash
X	Vinyl Sash
	Double Hung
	Horiz. Slide
	Casement
	Double Glass
	Patio Doors
X	Storms & Screens

(3) Roof

X	Gable		Gambrel
	Hip		Mansard
	Flat		Shed

X	Asphalt Shingle

Chimney:

(3) Roof (cont.)

	Eavestrough
X	Insulation
0	Front Overhang
0	Other Overhang

(4) Interior

X	Drywall		Plaster
	Paneled		Wood T&G

Trim & Decoration

	Ex	X	Ord		Min

Size of Closets

	Lg	X	Ord		Small

Doors:		Solid	X	H.C.	

(5) Floors

Kitchen:
Other: Linoleum
Other: Carpeted

(6) Ceilings

X	Drywall		

(7) Excavation

Basement: 0 S.F.
Crawl: 768 S.F.
Slab: 0 S.F.
Height to Joists: 0.0

(8) Basement

	Conc. Block
	Poured Conc.
	Stone
	Treated Wood
	Concrete Floor

(9) Basement Finish

	Recreation SF
	Living SF
	Walkout Doors (B)
	No Floor SF
	Walkout Doors (A)

(10) Floor Support

Joists:
Unsupported Len:
Cntr.Sup:

(11) Heating/Cooling

X	Gas		Oil		Elec.
	Wood		Coal		Steam

	Forced Air w/o Ducts
X	Forced Air w/ Ducts
	Forced Hot Water
	Electric Baseboard
	Elec. Ceil. Radiant
	Radiant (in-floor)
	Electric Wall Heat
	Space Heater
	Wall/Floor Furnace
	Forced Heat & Cool
	Heat Pump
	No Heating/Cooling

	Central Air
	Wood Furnace

(12) Electric

150	Amps Service

No./Qual. of Fixtures

	Ex.	X	Ord.		Min

No. of Elec. Outlets

	Many	X	Ave.		Few

(13) Plumbing

	Average Fixture(s)
1	3 Fixture Bath
	2 Fixture Bath
	Softener, Auto
	Softener, Manual
	Solar Water Heat
	No Plumbing
	Extra Toilet
	Extra Sink
	Separate Shower
	Ceramic Tile Floor
	Ceramic Tile Wains
	Ceramic Tub Alcove
	Vent Fan

(14) Water/Sewer

	Public Water
	Public Sewer
1	Water Well
1	1000 Gal Septic
	2000 Gal Septic

Lump Sum Items:

(15) Built-ins

	Appliance Allow.
	Cook Top
	Dishwasher
	Garbage Disposal
	Bath Heater
	Vent Fan
	Hot Tub
	Unvented Hood
	Vented Hood
	Intercom
	Jacuzzi Tub
	Jacuzzi repl.Tub
	Oven
	Microwave
	Standard Range
	Self Clean Range
	Sauna
	Trash Compactor
	Central Vacuum
	Security System

(15) Fireplaces

	Interior 1 Story
	Interior 2 Story
	2nd/Same Stack
	Two Sided
	Exterior 1 Story
	Exterior 2 Story
	Prefab 1 Story
	Prefab 2 Story
	Heat Circulator
	Raised Hearth
	Wood Stove
	Direct-Vented Gas

Class: CD
Effec. Age: 49
Floor Area: 768
Total Base New : 134,280 E.C.F.
Total Depr Cost: 68,483 X 1.297
Estimated T.C.V: 88,822

(16) Porches/Decks

Area	Type
96	WPP
72	WGEP (1 Story)

(17) Garage

Year Built:
Car Capacity:
Class: CD
Exterior: Siding
Brick Ven.: 0
Stone Ven.: 0
Common Wall: Detache
Foundation: 18 Inch
Finished ?:
Auto. Doors: 0
Mech. Doors: 0
Area: 576
% Good: 0
Storage Area: 0
No Conc. Floor: 0

Bsmnt Garage:

Carport Area:
Roof:

Cost Est. for Res. Bldg: 1 Single Family PLAIN Cls CD Blt 0
(11) Heating System: Forced Air w/ Ducts
Ground Area = 768 SF Floor Area = 768 SF.
Phy/Ab.Phy/Func/Econ/Comb. % Good=51/100/100/100/51
Building Areas

Stories	Exterior	Foundation	Size	Cost New	Depr. Cost
1 Story	Siding	Crawl Space	768		
			Total:	94,390	48,139
Other Additions/Adjustments					
Water/Sewer					
1000 Gal Septic			1	4,582	2,337
Water Well, 100 Feet			1	5,680	2,897
Porches					
WPP			96	2,567	1,309
WGEP (1 Story)			72	7,126	3,634
Garages					
Class: CD Exterior: Siding Foundation: 18 Inch (Unfinished)					
Base Cost			576	19,935	10,167
			Totals:	134,280	68,483

Notes:
ECF (RESIDENTIAL) 1.297 => TCV: 88,822

*** Information herein deemed reliable but not guaranteed***

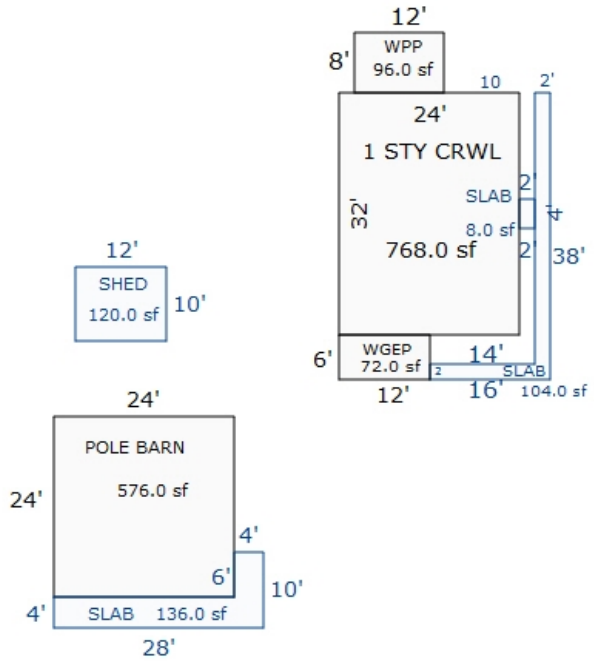

Sketch by Apex Sketch

*** Information herein deemed reliable but not guaranteed***

Parcel Number: 2410-HESL-15 Jurisdiction: GREENWOOD TWP County: WEXFORD Printed on 02/15/2024

Grantor	Grantee	Sale Price	Sale Date	Inst. Type	Terms of Sale	Liber & Page	Verified By	Prcnt. Trans.
GEORGE, WILLIAM R.	PASCHALL, DOUGLAS JR & TON	50,000	09/26/2022	WD	03-ARM'S LENGTH	694/8	DEED	100.0
GEORGE, LAURA	GEORGE, WILLIAM	1	11/20/2002	QC	09-FAMILY	454:430	DEED	0.0
HAAS, MABELLE ESTATE	GEORGE, WM & LAURA	20,000	09/24/2002	WD	08-ESTATE	446:491	DEED	0.0

Property Address

10091 RIVER RD

Owner's Name/Address

PASCHALL, DOUGLAS JR & TONYA TRUST
17397 COLLINS RD
DUNDEE MI 48131

Tax Description

LOT 15 HELSEL'S SUBDIVISION GW. SEC. 8 T24N R10W -MANTON-

Comments/Influences

Class: RESIDENTIAL-IMPROV Zoning:

School: MANTON CONSOLIDATED SCHOOLS

P.R.E. 0%

:

2024 Est TCV 106,782 TCV/TFA: 158.90

Building Permit(s)	Date	Number	Status
RESIDENTIAL - REMODEL	07/30/2004	PM7773	

X	Improved		Vacant

	Public Improvements
	Dirt Road
X	Gravel Road
	Paved Road
	Storm Sewer
	Sidewalk
	Water
	Sewer
X	Electric
	Gas
	Curb
	Street Lights
	Standard Utilities
	Underground Utils.

	Topography of Site
	Level
X	Rolling
	Low
	High
	Landscaped
	Swamp
X	Wooded
	Pond
	Waterfront
	Ravine
	Wetland
	Flood Plain
X	OPEN

Who	When	What
GLA	05/13/2021	INSPECTION

Land Value Estimates for Land Table 4010.LAND VALUES

Description	Frontage	Depth	* Factors * Front	Depth	Rate	%Adj.	Reason	Value
HELSEL RIV LOW	100.00	0.00	1.0000	1.0000	315	100		31,500
100 Actual Front Feet, 0.00 Total Acres							Total Est. Land Value =	31,500

Land Improvement Cost Estimates

Description	Rate	Size	% Good	Cash Value
D/W/P: 4in Concrete	6.11	224	45	616
Wood Frame	19.95	192	42	1,609
Total Estimated Land Improvements True Cash Value =				2,225

Year	Land Value	Building Value	Assessed Value	Board of Review	Tribunal/ Other	Taxable Value
2024	15,800	37,600	53,400			46,725C
2023	13,500	31,000	44,500			44,500S
2022	13,500	26,400	39,900			26,615C
2021	10,000	26,800	36,800			25,765C

The Equalizer. Copyright (c) 1999 - 2009. Licensed To: Township of Greenwood, County of Wexford, Michigan

*** Information herein deemed reliable but not guaranteed***

Building Type

X	Single Family
	Mobile Home
	Town Home
	Duplex
	A-Frame
X	Wood Frame

Building Style: PLAIN

Yr Built	Remodeled
0	0

Condition: Good

Room List

	Basement
	1st Floor
	2nd Floor
	Bedrooms

(1) Exterior

	Wood/Shingle
X	Aluminum/Vinyl
	Brick
X	Insulation

(2) Windows

	Many		Large
X	Avg.	X	Avg.
	Few		Small

	Wood Sash
	Metal Sash
X	Vinyl Sash
	Double Hung
	Horiz. Slide
	Casement
	Double Glass
	Patio Doors
X	Storms & Screens

(3) Roof

X	Gable		Gambrel
	Hip		Mansard
	Flat		Shed

X	Asphalt Shingle

Chimney:

(3) Roof (cont.)

	Eavestrough
X	Insulation
0	Front Overhang
0	Other Overhang

(4) Interior

X	Drywall		Plaster
	Paneled		Wood T&G

Trim & Decoration

	Ex	X	Ord		Min

Size of Closets

	Lg	X	Ord		Small

Doors:		Solid	X	H.C.	

(5) Floors

Kitchen:
Other: Linoleum
Other: Carpeted

(6) Ceilings

X	Drywall

(7) Excavation

Basement: 0 S.F.
Crawl: 672 S.F.
Slab: 0 S.F.
Height to Joists: 0.0

(8) Basement

	Conc. Block
	Poured Conc.
	Stone
	Treated Wood
	Concrete Floor

(9) Basement Finish

	Recreation SF
	Living SF
	Walkout Doors (B)
	No Floor SF
	Walkout Doors (A)

(10) Floor Support

Joists:
Unsupported Len:
Cntr.Sup:

(11) Heating/Cooling

X	Gas		Oil		Elec.
	Wood		Coal		Steam

	Forced Air w/o Ducts
X	Forced Air w/ Ducts
	Forced Hot Water
	Electric Baseboard
	Elec. Ceil. Radiant
	Radiant (in-floor)
	Electric Wall Heat
	Space Heater
	Wall/Floor Furnace
	Forced Heat & Cool
	Heat Pump
	No Heating/Cooling

	Central Air
	Wood Furnace

(12) Electric

150	Amps Service

No./Qual. of Fixtures

	Ex.	X	Ord.		Min

No. of Elec. Outlets

	Many	X	Ave.		Few

(13) Plumbing

1	Average Fixture(s)
	3 Fixture Bath
	2 Fixture Bath
	Softener, Auto
	Softener, Manual
	Solar Water Heat
	No Plumbing
	Extra Toilet
	Extra Sink
	Separate Shower
	Ceramic Tile Floor
	Ceramic Tile Wains
	Ceramic Tub Alcove
	Vent Fan

(14) Water/Sewer

	Public Water
	Public Sewer
1	Water Well
1	1000 Gal Septic
	2000 Gal Septic

Lump Sum Items:

(15) Built-ins

	Appliance Allow.
	Cook Top
	Dishwasher
	Garbage Disposal
	Bath Heater
	Vent Fan
	Hot Tub
	Unvented Hood
	Vented Hood
	Intercom
	Jacuzzi Tub
	Jacuzzi repl.Tub
	Oven
	Microwave
	Standard Range
	Self Clean Range
	Sauna
	Trash Compactor
	Central Vacuum
	Security System

(15) Fireplaces

	Interior 1 Story
	Interior 2 Story
	2nd/Same Stack
	Two Sided
	Exterior 1 Story
	Exterior 2 Story
	Prefab 1 Story
	Prefab 2 Story
	Heat Circulator
	Raised Hearth
	Wood Stove
	Direct-Vented Gas

Class: D
Effec. Age: 49
Floor Area: 672
Total Base New : 110,450 E.C.F.
Total Depr Cost: 56,328 X 1.297
Estimated T.C.V: 73,057

(16) Porches/Decks

Area	Type
90	CCP (1 Story)

(17) Garage

Year Built:
Car Capacity:
Class: D
Exterior: Siding
Brick Ven.: 0
Stone Ven.: 0
Common Wall: Detache
Foundation: 18 Inch
Finished ?:
Auto. Doors: 0
Mech. Doors: 0
Area: 672
% Good: 0
Storage Area: 0
No Conc. Floor: 0

Bsmnt Garage:

Carport Area:
Roof:

Cost Est. for Res. Bldg: 1 Single Family PLAIN Cls D Blt 0
(11) Heating System: Forced Air w/ Ducts
Ground Area = 672 SF Floor Area = 672 SF.
Phy/Ab.Phy/Func/Econ/Comb. % Good=51/100/100/100/51
Building Areas

Stories	Exterior	Foundation	Size	Cost New	Depr. Cost
1 Story	Siding	Crawl Space	672		
			Total:	79,053	40,316
Other Additions/Adjustments					
Water/Sewer					
1000 Gal Septic			1	4,293	2,189
Water Well, 100 Feet			1	5,545	2,828
Porches					
CCP (1 Story)			90	2,165	1,104
Garages					
Class: D Exterior: Siding Foundation: 18 Inch (Unfinished)					
Base Cost			672	19,394	9,891
			Totals:	110,450	56,328

Notes:
ECF (RESIDENTIAL) 1.297 => TCV: 73,057

*** Information herein deemed reliable but not guaranteed***

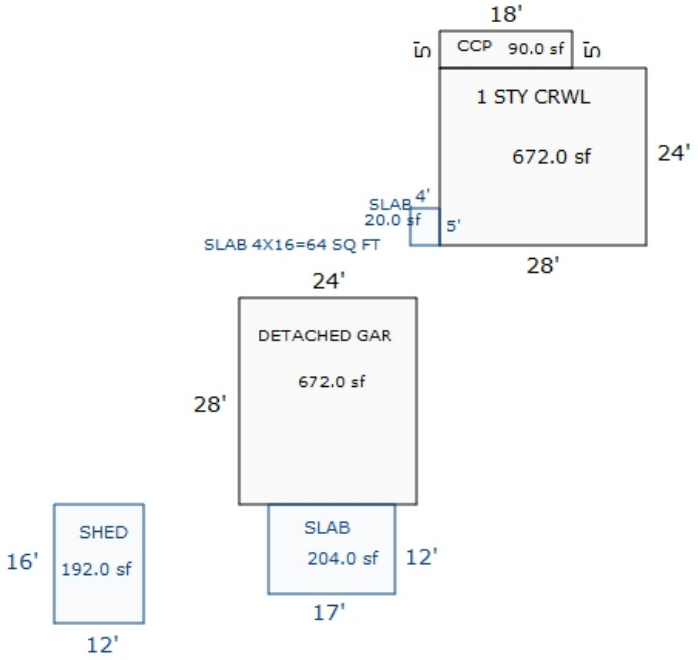

Sketch by Apex Sketch

*** Information herein deemed reliable but not guaranteed***

Parcel Number: 2410-HESL-16 Jurisdiction: GREENWOOD TWP County: WEXFORD Printed on 02/15/2024

Grantor	Grantee	Sale Price	Sale Date	Inst. Type	Terms of Sale	Liber & Page	Verified By	Prcnt. Trans.
GEORGE, OSCAR L & MAY A TR	PASCHALL, DOUGLAS JR & TON	60,000	07/19/2011	WD	16-LC PAYOFF	646/1135	DEED	0.0

Property Address

10085 RIVER RD

Owner's Name/Address

PASCHALL, DOUGLAS JR & TONYA TRUST
17397 COLLINS RD
DUNDEE MI 48131

Tax Description

LOT 16 HELSEL'S SUBDIVISION GW. SEC. 8 T24N R10W -MANTON-

Comments/Influences

Class: RESIDENTIAL-IMPROV Zoning:

School: MANTON CONSOLIDATED SCHOOLS

P.R.E. 0%

:

2024 Est TCV 184,893 TCV/TFA: 146.74

Building Permit(s)	Date	Number	Status

X Improved | Vacant

	Public Improvements
	Dirt Road
X	Gravel Road
	Paved Road
	Storm Sewer
	Sidewalk
	Water
	Sewer
X	Electric
	Gas
	Curb
	Street Lights
	Standard Utilities
	Underground Utils.

	Topography of Site
	Level
X	Rolling
	Low
	High
	Landscaped
	Swamp
X	Wooded
	Pond
	Waterfront
	Ravine
	Wetland
	Flood Plain
X	OPEN

Who	When	What
GLA	05/13/2021	INSPECTION

Land Value Estimates for Land Table 4010.LAND VALUES

Description	Frontage	Depth	* Factors * Front	Depth	Rate	%Adj.	Reason	Value
HELSEL RIV LOW	100.00	0.00	1.0000	1.0000	315	100		31,500
100 Actual Front Feet, 0.00 Total Acres							Total Est. Land Value =	31,500

Land Improvement Cost Estimates

Description	Rate	Size	% Good	Cash Value
Wood Frame	21.71	240	80	4,168
Total Estimated Land Improvements True Cash Value =				4,168

Year	Land Value	Building Value	Assessed Value	Board of Review	Tribunal/ Other	Taxable Value
2024	15,800	76,600	92,400			48,652C
2023	13,500	62,800	76,300			46,336C
2022	13,500	53,100	66,600			44,130C
2021	10,000	52,300	62,300			42,721C

The Equalizer. Copyright (c) 1999 - 2009. Licensed To: Township of Greenwood, County of Wexford, Michigan

*** Information herein deemed reliable but not guaranteed***

Building Type

X	Single Family
	Mobile Home
	Town Home
	Duplex
	A-Frame
X	Wood Frame

Building Style: PLAIN

Yr Built	Remodeled
1998	0

Condition: Average

Room List

	Basement
	1st Floor
	2nd Floor
	Bedrooms

(1) Exterior

	Wood/Shingle
	Aluminum/Vinyl
	Brick
X	Vinyl
	Insulation

(2) Windows

	Many		Large
X	Avg.	X	Avg.
	Few		Small

	Wood Sash
	Metal Sash
X	Vinyl Sash
X	Double Hung
	Horiz. Slide
	Casement
	Double Glass
X	Patio Doors
X	Storms & Screens

(3) Roof

X	Gable		Gambrel
	Hip		Mansard
	Flat		Shed

X	Asphalt Shingle

Chimney:

(3) Roof (cont.)

	Eavestrough
	Insulation
0	Front Overhang
0	Other Overhang

(4) Interior

	Drywall		Plaster
	Paneled		Wood T&G

Trim & Decoration

	Ex	X	Ord		Min

Size of Closets

	Lg	X	Ord		Small

Doors:		Solid	X	H.C.	

(5) Floors

Kitchen:
Other:
Other:

(6) Ceilings

(7) Excavation

Basement: 0 S.F.
Crawl: 840 S.F.
Slab: 0 S.F.
Height to Joists: 0.0

(8) Basement

	Conc. Block
	Poured Conc.
	Stone
	Treated Wood
	Concrete Floor

(9) Basement Finish

	Recreation SF
	Living SF
	Walkout Doors (B)
	No Floor SF
	Walkout Doors (A)

(10) Floor Support

Joists:
Unsupported Len:
Cntr.Sup:

(11) Heating/Cooling

X	Gas		Oil		Elec.
	Wood		Coal		Steam

	Forced Air w/o Ducts
X	Forced Air w/ Ducts
	Forced Hot Water
	Electric Baseboard
	Elec. Ceil. Radiant
	Radiant (in-floor)
	Electric Wall Heat
	Space Heater
	Wall/Floor Furnace
	Forced Heat & Cool
	Heat Pump
	No Heating/Cooling

	Central Air
	Wood Furnace

(12) Electric

0	Amps Service

No./Qual. of Fixtures

	Ex.	X	Ord.		Min

No. of Elec. Outlets

	Many	X	Ave.		Few

(13) Plumbing

	Average Fixture(s)
1	3 Fixture Bath
	2 Fixture Bath
	Softener, Auto
	Softener, Manual
	Solar Water Heat
	No Plumbing
	Extra Toilet
	Extra Sink
	Separate Shower
	Ceramic Tile Floor
	Ceramic Tile Wains
	Ceramic Tub Alcove
	Vent Fan

(14) Water/Sewer

	Public Water
	Public Sewer
1	Water Well
1	1000 Gal Septic
	2000 Gal Septic

Lump Sum Items:

(15) Built-ins

	Appliance Allow.
	Cook Top
	Dishwasher
	Garbage Disposal
	Bath Heater
	Vent Fan
	Hot Tub
	Unvented Hood
	Vented Hood
	Intercom
	Jacuzzi Tub
	Jacuzzi repl.Tub
	Oven
	Microwave
	Standard Range
	Self Clean Range
	Sauna
	Trash Compactor
	Central Vacuum
	Security System

(15) Fireplaces

	Interior 1 Story
	Interior 2 Story
	2nd/Same Stack
	Two Sided
	Exterior 1 Story
	Exterior 2 Story
	Prefab 1 Story
	Prefab 2 Story
	Heat Circulator
	Raised Hearth
	Wood Stove
	Direct-Vented Gas

Class: CD
Effec. Age: 25
Floor Area: 1,260
Total Base New : 153,407 E.C.F.
Total Depr Cost: 115,054 X 1.297
Estimated T.C.V: 149,225

(16) Porches/Decks

Area	Type
192	WPP
392	Treated Wood
9	Treated Wood

(17) Garage

Year Built:
Car Capacity:
Class:
Exterior:
Brick Ven.:
Stone Ven.:
Common Wall:
Foundation:
Finished ?:
Auto. Doors:
Mech. Doors:
Area:
% Good:
Storage Area:
No Conc. Floor:

Bsmnt Garage:

Carport Area:
Roof:

Cost Est. for Res. Bldg: 1 Single Family PLAIN Cls CD Blt 1998
(11) Heating System: Forced Air w/ Ducts
Ground Area = 840 SF Floor Area = 1260 SF.
Phy/Ab.Phy/Func/Econ/Comb. % Good=75/100/100/100/75
Building Areas

Stories	Exterior	Foundation	Size	Cost New	Depr. Cost
1.5 Story	Siding	Crawl Space	840		
			Total:	132,402	99,301
Other Additions/Adjustments					
Water/Sewer					
1000 Gal Septic			1	4,582	3,436
Water Well, 100 Feet			1	5,680	4,260
Porches					
WPP			192	4,003	3,002
Deck					
Treated Wood			392	6,335	4,751
Treated Wood			9	405	304
			Totals:	153,407	115,054

Notes:

ECF (RESIDENTIAL) 1.297 => TCV: 149,225

*** Information herein deemed reliable but not guaranteed***

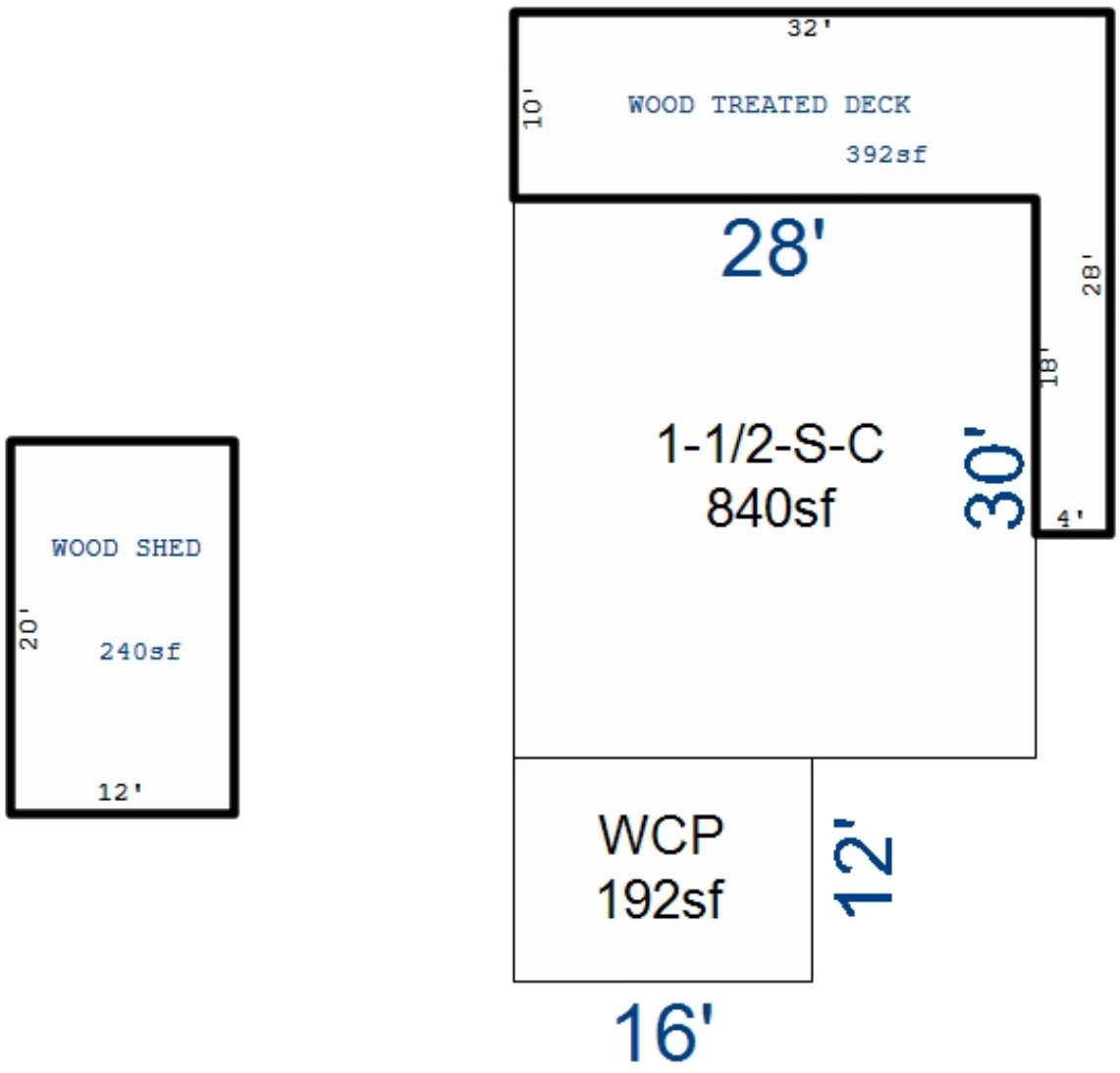

*** Information herein deemed reliable but not guaranteed***

Parcel Number: 2410-HESL-17 Jurisdiction: GREENWOOD TWP County: WEXFORD Printed on 02/15/2024

Grantor	Grantee	Sale Price	Sale Date	Inst. Type	Terms of Sale	Liber & Page	Verified By	Prcnt. Trans.
HUNTINGTON NATIONAL BANK	CROUSE, TERRY M	130,000	05/18/2007	WD	21-NOT USED/OTHER	600/2641	DEED	100.0
GENEREAUX, TROY A & NICOLE	HUNTINGTON NATIONAL BANK	144,570	10/13/2006	SD	21-NOT USED/OTHER	593:1814	DEED	0.0
LYNCH, TAMARA	GENEREAUX, TROY & NICOLE	140,000	05/21/2004	WD	03-ARM'S LENGTH	552:506	DEED	0.0
LYNCH, TAMARA	MORTGAGE ELECTRONIC REG. S	115,811	04/16/2004	SD	32-SPLIT VACANT	546:212	DEED	0.0

Property Address

10075 RIVER RD

Owner's Name/Address

CROUSE, TERRY M
10075 RIVER RD
MANTON MI 49663

Tax Description

LOT 17 HELSEL'S SUBDIVISION GW. SEC. 8 T24N R10W -MANTON-

Comments/Influences

Class: RESIDENTIAL-IMPROV Zoning:

School: MANTON CONSOLIDATED SCHOOLS

P.R.E. 100% 05/01/2009

:

2024 Est TCV 221,189 TCV/TFA: 112.16

Building Permit(s)	Date	Number	Status
RESIDENTIAL - NEW	09/23/2003	PM7045	

X	Improved		Vacant

	Public Improvements
	Dirt Road
X	Gravel Road
	Paved Road
	Storm Sewer
	Sidewalk
	Water
	Sewer
X	Electric
	Gas
	Curb
	Street Lights
	Standard Utilities
	Underground Utils.

	Topography of Site
	Level
X	Rolling
	Low
	High
	Landscaped
	Swamp
X	Wooded
	Pond
	Waterfront
	Ravine
	Wetland
	Flood Plain
X	OPEN

Who	When	What
GLA	05/13/2021	INSPECTION

Land Value Estimates for Land Table 4010.LAND VALUES

Description	Frontage	Depth	* Factors * Front	Depth	Rate	%Adj.	Reason	Value
HELSEL RIV LOW	101.00	0.00	1.0000	1.0000	315	100		31,815
101 Actual Front Feet, 0.00 Total Acres							Total Est. Land Value =	31,815

Land Improvement Cost Estimates

Description	Rate	Size	% Good	Cash Value
D/W/P: 4in Concrete	7.01	432	45	1,363
D/W/P: 4in Concrete	7.01	416	45	1,312
D/W/P: 4in Concrete	7.01	57	45	180
Total Estimated Land Improvements True Cash Value =				2,855

Year	Land Value	Building Value	Assessed Value	Board of Review	Tribunal/ Other	Taxable Value
2024	15,900	94,700	110,600			63,626C
2023	13,600	77,900	91,500			60,597C
2022	13,600	66,200	79,800			57,712C
2021	10,100	67,200	77,300			55,869C

The Equalizer. Copyright (c) 1999 - 2009. Licensed To: Township of Greenwood, County of Wexford, Michigan

*** Information herein deemed reliable but not guaranteed***

Building Type

X	Single Family
	Mobile Home
	Town Home
	Duplex
	A-Frame
X	Wood Frame

Building Style: PLAIN

Yr Built	Remodeled
0	0

Condition: Good

Room List

	Basement
	1st Floor
	2nd Floor
	Bedrooms

(1) Exterior

X	Wood/Shingle
	Aluminum/Vinyl
	Brick
X	Insulation

(2) Windows

X	Many Avg. Few		Large Avg. Small

	Wood Sash
	Metal Sash
X	Vinyl Sash
	Double Hung
	Horiz. Slide
	Casement
	Double Glass
	Patio Doors
X	Storms & Screens

(3) Roof

X	Gable		Gambrel
	Hip		Mansard
	Flat		Shed

X	Asphalt Shingle

Chimney:

(3) Roof (cont.)

	Eavestrough
X	Insulation
0	Front Overhang
0	Other Overhang

(4) Interior

X	Drywall		Plaster
	Paneled		Wood T&G

Trim & Decoration

	Ex	X	Ord		Min

Size of Closets

	Lg	X	Ord		Small

Doors:		Solid	X	H.C.	

(5) Floors

Kitchen:
Other: Linoleum
Other: Carpeted

(6) Ceilings

X	Drywall		

(7) Excavation

Basement: 0 S.F.
Crawl: 1972 S.F.
Slab: 0 S.F.
Height to Joists: 0.0

(8) Basement

	Conc. Block
	Poured Conc.
	Stone
	Treated Wood
	Concrete Floor

(9) Basement Finish

	Recreation SF
	Living SF
	Walkout Doors (B)
	No Floor SF
	Walkout Doors (A)

(10) Floor Support

Joists:
Unsupported Len:
Cntr.Sup:

(11) Heating/Cooling

X	Gas		Oil		Elec.
	Wood		Coal		Steam

	Forced Air w/o Ducts
X	Forced Air w/ Ducts
	Forced Hot Water
	Electric Baseboard
	Elec. Ceil. Radiant
	Radiant (in-floor)
	Electric Wall Heat
	Space Heater
	Wall/Floor Furnace
	Forced Heat & Cool
	Heat Pump
	No Heating/Cooling

	Central Air
	Wood Furnace

(12) Electric

150	Amps Service

No./Qual. of Fixtures

	Ex.	X	Ord.		Min

No. of Elec. Outlets

	Many	X	Ave.		Few

(13) Plumbing

2	Average Fixture(s)
	3 Fixture Bath
	2 Fixture Bath
	Softener, Auto
	Softener, Manual
	Solar Water Heat
	No Plumbing
	Extra Toilet
	Extra Sink
	Separate Shower
	Ceramic Tile Floor
	Ceramic Tile Wains
	Ceramic Tub Alcove
	Vent Fan

(14) Water/Sewer

	Public Water
	Public Sewer
1	Water Well
1	1000 Gal Septic
	2000 Gal Septic

Lump Sum Items:

(15) Built-ins

	Appliance Allow.
	Cook Top
	Dishwasher
	Garbage Disposal
	Bath Heater
	Vent Fan
	Hot Tub
	Unvented Hood
	Vented Hood
	Intercom
	Jacuzzi Tub
	Jacuzzi repl.Tub
	Oven
	Microwave
	Standard Range
	Self Clean Range
	Sauna
	Trash Compactor
	Central Vacuum
	Security System

(15) Fireplaces

	Interior 1 Story
	Interior 2 Story
	2nd/Same Stack
	Two Sided
	Exterior 1 Story
	Exterior 2 Story
	Prefab 1 Story
	Prefab 2 Story
	Heat Circulator
	Raised Hearth
	Wood Stove
	Direct-Vented Gas

Class: C
Effec. Age: 49
Floor Area: 1,972
Total Base New : 281,979 E.C.F.
Total Depr Cost: 143,808 X 1.297
Estimated T.C.V: 186,519

(16) Porches/Decks

Area	Type

(17) Garage

Year Built:
Car Capacity:
Class: C
Exterior: Siding
Brick Ven.: 0
Stone Ven.: 0
Common Wall: Detache
Foundation: 18 Inch
Finished ?:
Auto. Doors: 0
Mech. Doors: 0
Area: 576
% Good: 0
Storage Area: 0
No Conc. Floor: 0

Bsmnt Garage:

Carport Area:
Roof:

Cost Est. for Res. Bldg: 1 Single Family PLAIN Cls C Blt 0
(11) Heating System: Forced Air w/ Ducts
Ground Area = 1972 SF Floor Area = 1972 SF.
Phy/Ab.Phy/Func/Econ/Comb. % Good=51/100/100/100/51
Building Areas

Stories	Exterior	Foundation	Size	Cost New	Depr. Cost
1 Story	Siding	Crawl Space	1,972		
			Total:	244,112	124,496
Other Additions/Adjustments					
Plumbing					
3 Fixture Bath			1	4,678	2,386
Water/Sewer					
1000 Gal Septic			1	4,899	2,498
Water Well, 100 Feet			1	5,849	2,983
Garages					
Class: C Exterior: Siding Foundation: 18 Inch (Unfinished)					
Base Cost			576	22,441	11,445
			Totals:	281,979	143,808

Notes:
ECF (RESIDENTIAL) 1.297 => TCV: 186,519

*** Information herein deemed reliable but not guaranteed***

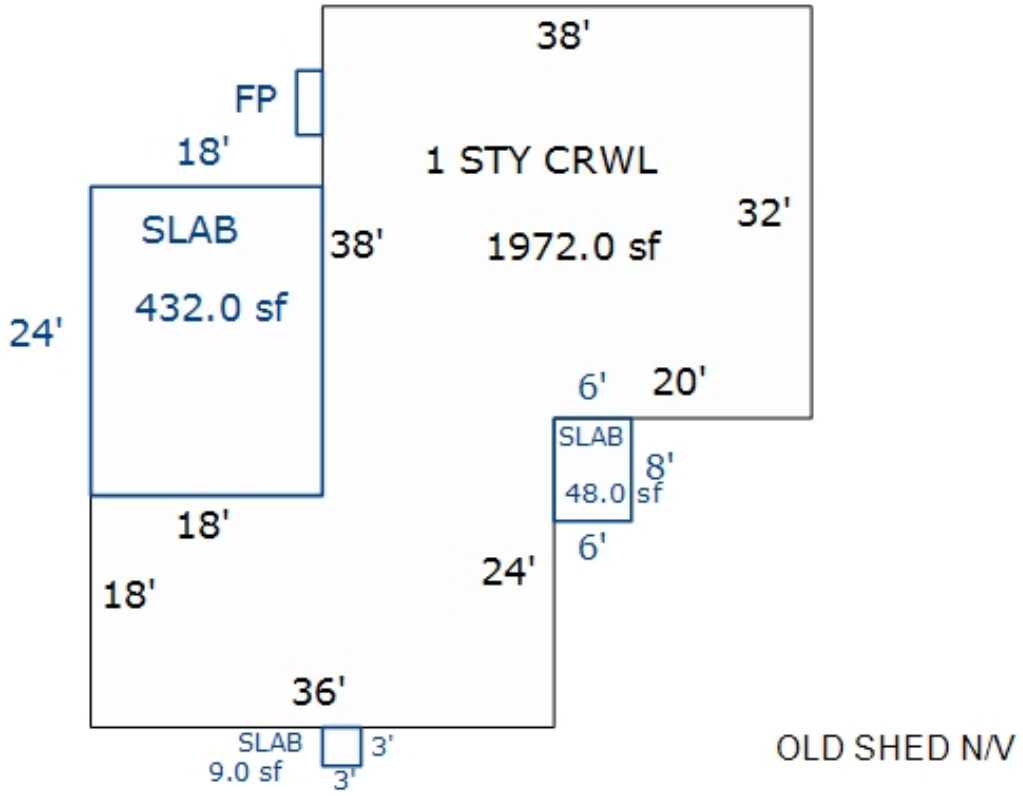

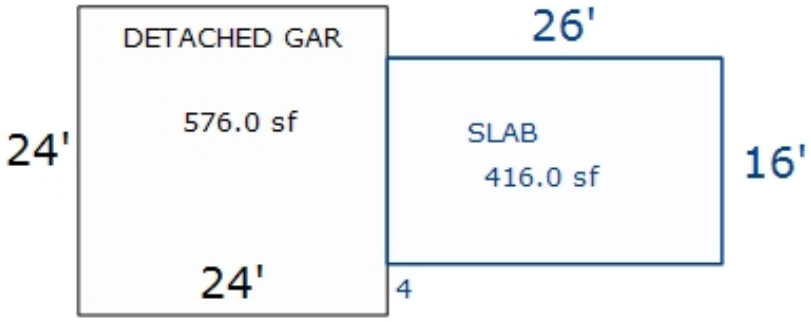

*** Information herein deemed reliable but not guaranteed***

Parcel Number: 2410-HESL-18 Jurisdiction: GREENWOOD TWP County: WEXFORD Printed on 02/15/2024

Grantor	Grantee	Sale Price	Sale Date	Inst. Type	Terms of Sale	Liber & Page	Verified By	Prcnt. Trans.
BAILEY, RONALD W.	GEORGE, WILLIAM & DEE	175,000	09/08/2003	WD	03-ARM'S LENGTH	512:39	DEED	0.0

Property Address

10065 RIVER RD

Owner's Name/Address

GEORGE, WILLIAM
& DEE L
10065 RIVER RD
MANTON MI 49663

Tax Description

LOT 18 HELSEL'S SUBDIVISION GW. SEC. 8 T24N R10W -MANTON-

Comments/Influences

Class: RESIDENTIAL-IMPROV Zoning:

School: MANTON CONSOLIDATED SCHOOLS

P.R.E. 100% / /

:

2024 Est TCV 187,820 TCV/TFA: 84.76

Building Permit(s)	Date	Number	Status

X Improved | Vacant

	Public Improvements
	Dirt Road
X	Gravel Road
	Paved Road
	Storm Sewer
	Sidewalk
	Water
	Sewer
X	Electric
	Gas
	Curb
	Street Lights
	Standard Utilities
	Underground Utils.

	Topography of Site
	Level
X	Rolling
	Low
	High
	Landscaped
	Swamp
X	Wooded
	Pond
	Waterfront
	Ravine
	Wetland
	Flood Plain
X	OPEN

Who	When	What
GLA	10/31/2022	INSPECTION
GLA	06/22/2015	INSPECTION

Land Value Estimates for Land Table 4010.LAND VALUES

Description	Frontage	Depth	* Factors * Front	Depth	Rate	%Adj.	Reason	Value
HELSEL RIV LOW	140.00	0.00	1.0000	1.0000	315	100		44,100
140 Actual Front Feet, 0.00 Total Acres							Total Est. Land Value =	44,100

Land Improvement Cost Estimates

Description	Rate	Size	% Good	Cash Value
D/W/P: 4in Concrete	6.53	1054	43	2,960
Total Estimated Land Improvements True Cash Value =				2,960

Year	Land Value	Building Value	Assessed Value	Board of Review	Tribunal/ Other	Taxable Value
2024	22,100	71,800	93,900			32,194C
2023	18,900	61,000	79,900			30,661C
2022	18,900	21,900	40,800			20,535C
2021	14,000	18,900	32,900			19,879C

The Equalizer. Copyright (c) 1999 - 2009.
Licensed To: Township of Greenwood, County of Wexford, Michigan

*** Information herein deemed reliable but not guaranteed***

Building Type

	Single Family
X	Mobile Home
	Town Home
	Duplex
	A-Frame

X	Wood Frame

Building Style: SWT/DWT

Yr Built	Remodeled
0	0

Condition: Good

Room List

	Basement
	1st Floor
	2nd Floor
	Bedrooms

(1) Exterior

	Wood/Shingle
X	Aluminum/Vinyl
	Brick
X	Insulation

(2) Windows

	Many		Large
X	Avg.	X	Avg.
	Few		Small

	Wood Sash
	Metal Sash
X	Vinyl Sash
	Double Hung
	Horiz. Slide
	Casement
	Double Glass
	Patio Doors
X	Storms & Screens

(3) Roof

X	Gable		Gambrel
	Hip		Mansard
	Flat		Shed

X	Asphalt Shingle

Chimney:

(3) Roof (cont.)

	Eavestrough
X	Insulation
0	Front Overhang
0	Other Overhang

(4) Interior

X	Drywall		Plaster
	Paneled		Wood T&G

Trim & Decoration

	Ex	X	Ord		Min

Size of Closets

	Lg	X	Ord		Small

Doors:		Solid	X	H.C.	

(5) Floors

Kitchen:
Other: Linoleum
Other: Carpeted

(6) Ceilings

X	Drywall		

(7) Excavation

Basement: 0 S.F.
Crawl: 1376 S.F.
Slab: 0 S.F.
Height to Joists: 0.0

(8) Basement

	Conc. Block
	Poured Conc.
	Stone
	Treated Wood
	Concrete Floor

(9) Basement Finish

	Recreation	SF
	Living	SF
	Walkout Doors (B)	
	No Floor	SF
	Walkout Doors (A)	

(10) Floor Support

Joists:
Unsupported Len:
Cntr.Sup:

(11) Heating/Cooling

X	Gas		Oil		Elec.
	Wood		Coal		Steam

X	Forced Warm Air
	Wall Furnace
	Warm & Cool Air
	Heat Pump

	Central Air
	Wood Furnace

(12) Electric

150	Amps Service

No./Qual. of Fixtures

	Ex.	X	Ord.		Min

No. of Elec. Outlets

	Many	X	Ave.		Few

(13) Plumbing

1	Average Fixture(s)
	3 Fixture Bath
	2 Fixture Bath
	Softener, Auto
	Softener, Manual
	Solar Water Heat
	No Plumbing
	Extra Toilet
	Extra Sink
	Separate Shower
	Ceramic Tile Floor
	Ceramic Tile Wains
	Ceramic Tub Alcove
	Vent Fan

(14) Water/Sewer

	Public Water
	Public Sewer
1	Water Well
1	1000 Gal Septic
	2000 Gal Septic

Lump Sum Items:

(15) Built-ins

	Appliance Allow.
	Cook Top
	Dishwasher
	Garbage Disposal
	Bath Heater
	Vent Fan
	Hot Tub
	Unvented Hood
	Vented Hood
	Intercom
	Jacuzzi Tub
	Jacuzzi repl.Tub
	Oven
	Microwave
	Standard Range
	Self Clean Range
	Sauna
	Trash Compactor
	Central Vacuum
	Security System

(15) Fireplaces

	Interior 1 Story
	Interior 2 Story
	2nd/Same Stack
	Two Sided
	Exterior 1 Story
	Exterior 2 Story
	Prefab 1 Story
	Prefab 2 Story
	Heat Circulator
	Raised Hearth
	Wood Stove
	Direct-Vented Gas

Class: Fair
Effec. Age: 15
Floor Area:
Total Base New : 187,116 E.C.F.
Total Depr Cost: 108,527 X 1.297
Estimated T.C.V: 140,760

(16) Porches/Decks

Area	Type
42	WCP (1 Story)
64	WCP (1 Story)
204	Treated Wood

(17) Garage

Year Built:
Car Capacity:
Class: CD
Exterior: Siding
Brick Ven.: 0
Stone Ven.: 0
Common Wall: 1.5 Wal
Foundation: 42 Inch
Finished ?:
Auto. Doors: 0
Mech. Doors: 0
Area: 528
% Good: 0
Storage Area: 0
No Conc. Floor: 0

Bsmnt Garage:

Carport Area:
Roof:

Cost Est. for Res. Bldg: 1 Mobile Home SWT/DWT Cls Fair Blt 0
(11) Heating System: Wall Furnace
Ground Area = 2216 SF Floor Area = 2216 SF.
Phy/Ab.Phy/Func/Econ/Comb. % Good=58/100/100/100/58
Building Areas

Type	Ext. Walls	Roof/Fnd.	Size	Cost New	Depr. Cost
Main Home	Siding	Comp.Shingle	840		
Addition	Siding	Crawl	896		
Addition	Siding	Crawl	480		
		Total:		128,841	74,728
Other Additions/Adjustments					
Water/Sewer					
1000 Gal Septic			1	4,582	2,658
Water Well, 100 Feet			1	5,680	3,294
Porches					
WCP (1 Story)			42	2,373	1,376
WCP (1 Story)			64	3,068	1,779
Deck					
Treated Wood			204	4,123	2,391
Garages					
Class: CD Exterior: Siding Foundation: 42 Inch (Unfinished)					
Base Cost			528	21,120	12,250
Common Wall: 1.5 Wall			1	-3,791	-2,199
Class: CD Exterior: Siding Foundation: 42 Inch (Unfinished)					
Base Cost			528	21,120	12,250
		Totals:		187,116	108,527

Notes:

ECF (RESIDENTIAL) 1.297 => TCV: 140,760

*** Information herein deemed reliable but not guaranteed***

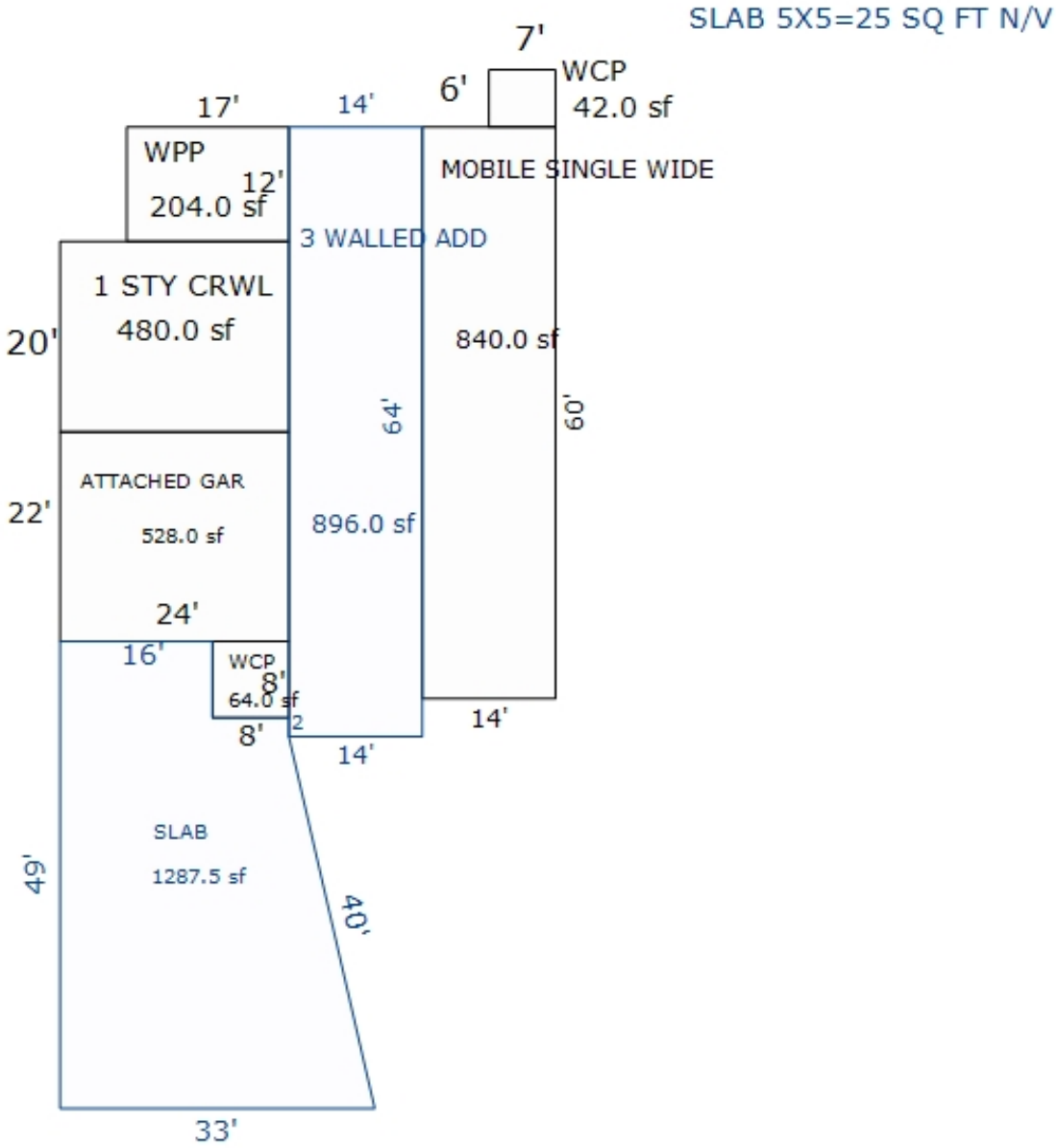

*** Information herein deemed reliable but not guaranteed***

Parcel Number: 2410-HESL-19 Jurisdiction: GREENWOOD TWP County: WEXFORD Printed on 02/15/2024

Grantor	Grantee	Sale Price	Sale Date	Inst. Type	Terms of Sale	Liber & Page	Verified By	Prcnt. Trans.
SWANSON, RICK A.	SWANSON ANDREW R & NATHAN	0	10/25/2023	QC	15-LADY BIRD	696/989	PROPERTY TRANSFER	0.0

Property Address

10055 RIVER RD

Owner's Name/Address

SWANSON, RICK A.
& PATRICE K.
10055 RIVER RD
MANTON MI 49663

Tax Description

LOT 19 HELSEL'S SUBDIVISION GW. SEC. 8 T24N R10W -MANTON-

Comments/Influences

Class: RESIDENTIAL-IMPROV Zoning:

School: MANTON CONSOLIDATED SCHOOLS

P.R.E. 100% / /

:

2024 Est TCV 233,856 TCV/TFA: 131.09

Building Permit(s)	Date	Number	Status
Pole Barn	10/18/2011	PB11-0275	

[X] Improved [ ] Vacant

Public Improvements

- [ ] Dirt Road
- [X] Gravel Road
- [ ] Paved Road
- [ ] Storm Sewer
- [ ] Sidewalk
- [ ] Water
- [ ] Sewer
- [X] Electric
- [ ] Gas
- [ ] Curb
- [ ] Street Lights
- [ ] Standard Utilities
- [ ] Underground Utils.

Topography of Site

- [ ] Level
- [X] Rolling
- [ ] Low
- [ ] High
- [ ] Landscaped
- [ ] Swamp
- [X] Wooded
- [ ] Pond
- [ ] Waterfront
- [ ] Ravine
- [ ] Wetland
- [ ] Flood Plain
- [X] OPEN

Who	When	What
GLA	05/13/2021	INSPECTION

Land Value Estimates for Land Table 4010.LAND VALUES

Description	Frontage	Depth	* Factors * Front	Depth	Rate	%Adj.	Reason	Value
HELSEL RIV LOW	151.00	0.00	1.0000	1.0000	315	100		47,565
151 Actual Front Feet, 0.00 Total Acres							Total Est. Land Value =	47,565

Year	Land Value	Building Value	Assessed Value	Board of Review	Tribunal/ Other	Taxable Value
2024	23,800	93,100	116,900			64,312C
2023	20,400	76,200	96,600			61,250C
2022	20,400	64,500	84,900			58,334C
2021	15,100	65,100	80,200			56,471C

The Equalizer. Copyright (c) 1999 - 2009.
Licensed To: Township of Greenwood, County of Wexford, Michigan

*** Information herein deemed reliable but not guaranteed***

Building Type

X	Single Family
	Mobile Home
	Town Home
	Duplex
	A-Frame
X	Wood Frame

Building Style: PLAIN

Yr Built	Remodeled
0	0

Condition: Good

Room List

	Basement
	1st Floor
	2nd Floor
	Bedrooms

(1) Exterior

	Wood/Shingle
X	Aluminum/Vinyl
	Brick
X	Insulation

(2) Windows

X	Many Avg. Few	X	Large Avg. Small

	Wood Sash
	Metal Sash
X	Vinyl Sash
	Double Hung
	Horiz. Slide
	Casement
	Double Glass
	Patio Doors
X	Storms & Screens

(3) Roof

X	Gable Hip Flat		Gambrel Mansard Shed
X	Asphalt Shingle		

Chimney:

(3) Roof (cont.)

	Eavestrough
X	Insulation
0	Front Overhang
0	Other Overhang

(4) Interior

X	Drywall Paneled		Plaster Wood T&G

Trim & Decoration

	Ex	X	Ord		Min

Size of Closets

	Lg	X	Ord		Small

Doors: Solid X H.C.

(5) Floors

Kitchen:
Other: Linoleum
Other: Carpeted

(6) Ceilings

X	Drywall

(7) Excavation

Basement: 0 S.F.
Crawl: 1784 S.F.
Slab: 0 S.F.
Height to Joists: 0.0

(8) Basement

	Conc. Block
	Poured Conc.
	Stone
	Treated Wood
	Concrete Floor

(9) Basement Finish

	Recreation SF
	Living SF
	Walkout Doors (B)
	No Floor SF
	Walkout Doors (A)

(10) Floor Support

Joists:
Unsupported Len:
Cntr.Sup:

(11) Heating/Cooling

X	Gas Wood		Oil Coal		Elec. Steam

	Forced Air w/o Ducts
X	Forced Air w/ Ducts
	Forced Hot Water
	Electric Baseboard
	Elec. Ceil. Radiant
	Radiant (in-floor)
	Electric Wall Heat
	Space Heater
	Wall/Floor Furnace
	Forced Heat & Cool
	Heat Pump
	No Heating/Cooling

	Central Air
	Wood Furnace

(12) Electric

150	Amps Service

No./Qual. of Fixtures

	Ex.	X	Ord.		Min

No. of Elec. Outlets

	Many	X	Ave.		Few

(13) Plumbing

	Average Fixture(s)
2	3 Fixture Bath
	2 Fixture Bath
	Softener, Auto
	Softener, Manual
	Solar Water Heat
	No Plumbing
	Extra Toilet
	Extra Sink
	Separate Shower
	Ceramic Tile Floor
	Ceramic Tile Wains
	Ceramic Tub Alcove
	Vent Fan

(14) Water/Sewer

	Public Water
	Public Sewer
1	Water Well
1	1000 Gal Septic
	2000 Gal Septic

Lump Sum Items:

(15) Built-ins

	Appliance Allow.
	Cook Top
	Dishwasher
	Garbage Disposal
	Bath Heater
	Vent Fan
	Hot Tub
	Unvented Hood
	Vented Hood
	Intercom
	Jacuzzi Tub
	Jacuzzi repl.Tub
	Oven
	Microwave
	Standard Range
	Self Clean Range
	Sauna
	Trash Compactor
	Central Vacuum
	Security System

(15) Fireplaces

	Interior 1 Story
	Interior 2 Story
	2nd/Same Stack
	Two Sided
	Exterior 1 Story
	Exterior 2 Story
	Prefab 1 Story
	Prefab 2 Story
	Heat Circulator
	Raised Hearth
	Wood Stove
	Direct-Vented Gas

Class: CD
Effec. Age: 39
Floor Area: 1,784
Total Base New : 235,512 E.C.F.
Total Depr Cost: 143,632 X 1.297
Estimated T.C.V: 186,291

(16) Porches/Decks

Area	Type
518	WPP
40	WCP (1 Story)
500	Treated Wood

(17) Garage

Year Built:
Car Capacity:
Class:
Exterior:
Brick Ven.:
Stone Ven.:
Common Wall:
Foundation:
Finished ?:
Auto. Doors:
Mech. Doors:
Area:
% Good:
Storage Area:
No Conc. Floor:

Bsmnt Garage:

Carport Area: 480
Roof: Comp.Shingle

Cost Est. for Res. Bldg: 1 Single Family PLAIN Cls CD Blt 0
(11) Heating System: Forced Air w/ Ducts
Ground Area = 1784 SF Floor Area = 1784 SF.
Phy/Ab.Phy/Func/Econ/Comb. % Good=61/100/100/100/61

Building Areas

Stories	Exterior	Foundation	Size	Cost New	Depr. Cost	
1 Story	Siding	Crawl Space	1,784			
			Total:	195,480	119,242	
Other Additions/Adjustments						
Plumbing						
3 Fixture Bath			1	3,887	2,371	
Water/Sewer						
1000 Gal Septic			1	4,582	2,795	
Water Well, 100 Feet			1	5,680	3,465	
Porches						
WPP			518	7,708	4,702	
WCP (1 Story)			40	2,514	1,534	
Deck						
Treated Wood			500	7,425	4,529	
Carports						
Comp.Shingle			480	7,238	4,415	
Local Cost Items						
SHED			128	998	579	*5
			Totals:	235,512	143,632	

Notes:

ECF (RESIDENTIAL) 1.297 => TCV: 186,291

*** Information herein deemed reliable but not guaranteed***

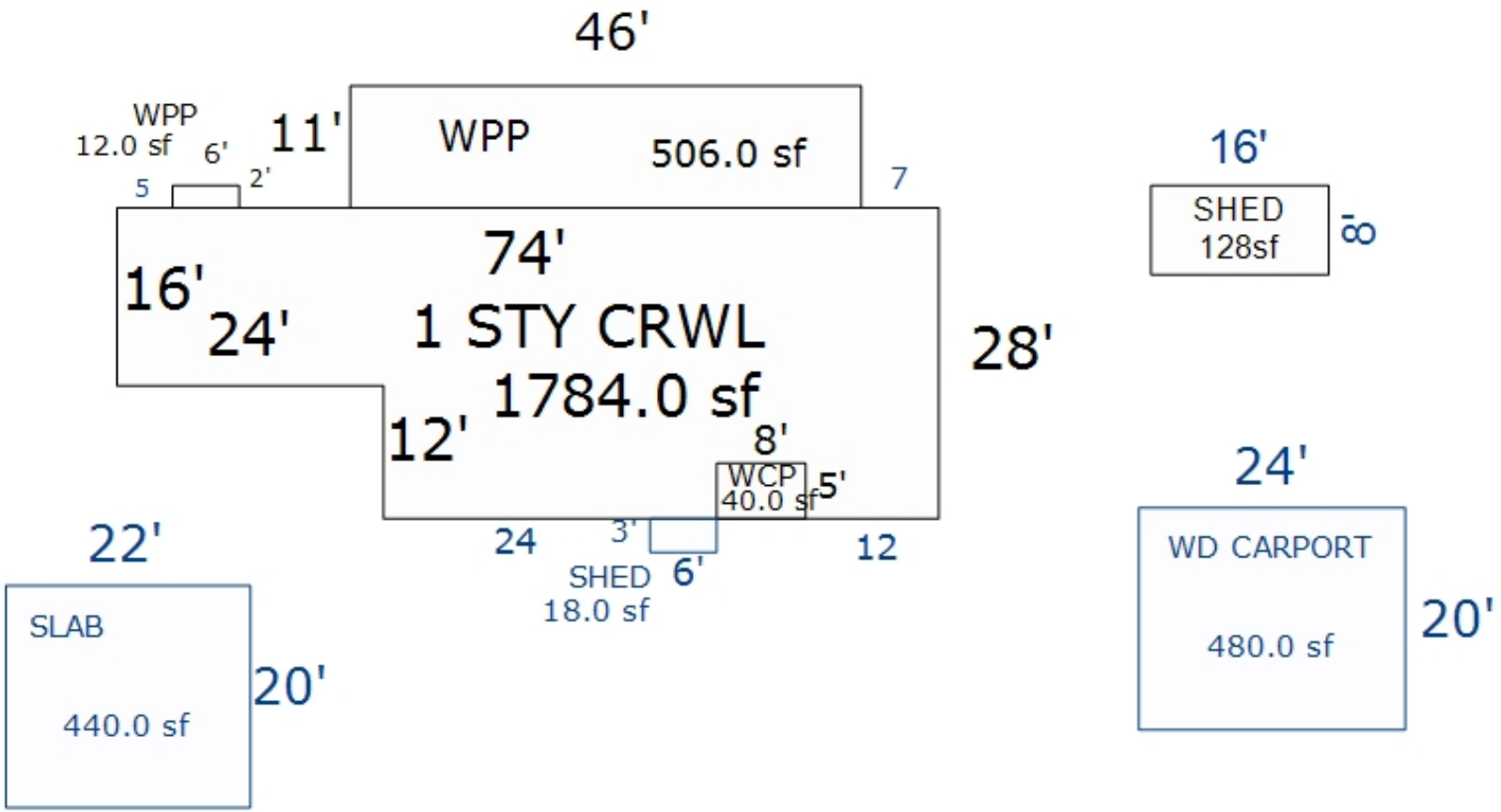

*** Information herein deemed reliable but not guaranteed***

Parcel Number: 2410-OH-01-01 Jurisdiction: GREENWOOD TWP County: WEXFORD Printed on 02/15/2024

Grantor	Grantee	Sale Price	Sale Date	Inst. Type	Terms of Sale	Liber & Page	Verified By	Prcnt. Trans.
GRIFFIS, BRAD D & JENNIFER	GRIFFIS, BRAD D & JENNIFEF	100	11/18/2020	QC	14-INTO/OUT OF TRUST	688/1988	AGENT	0.0
DEAN, BETTY J	GRIFFIS, BRAD D & JENNIFEF	30,000	03/24/2011	WD	31-SPLIT IMPROVED	638/177	DEED	100.0

Property Address

6980 N 27 RD

Owner's Name/Address

GRIFFIS, BRAD D & JENNIFER L TRUST
12725 LEISURE LANE
HORTON MI 49246

Tax Description

LOT 1 ORLANDO'S HIDEAWAY GW. SEC. 31 T24N R10W -MANTON- SPLIT ON 05/23/2011 FROM 2410-OH-01;

Comments/Influences

DE ROBERT DEAN 11/02/10 638/176
Split/Comb. on 05/23/2011 completed / /
/ deb ;
Parent Parcel(s): 2410-OH-01;
Child Parcel(s): 2410-OH-01-01, 2410-OH-02;

Class: RESIDENTIAL-IMPROV Zoning:
School: MANTON CONSOLIDATED SCHOOLS
P.R.E. 0%
:
2024 Est TCV 69,724 TCV/TFA: 159.92

Building Permit(s)	Date	Number	Status
Res. Add/Alter/Repair	10/04/2011	PE11-19210	

X Improved | Vacant

	Public Improvements
	Dirt Road
X	Gravel Road
	Paved Road
	Storm Sewer
	Sidewalk
	Water
	Sewer
X	Electric
	Gas
	Curb
	Street Lights
	Standard Utilities
	Underground Utils.

	Topography of Site
	Level
X	Rolling
X	Low
X	High
	Landscaped
	Swamp
X	Wooded
	Pond
	Waterfront
	Ravine
	Wetland
	Flood Plain
X	OPEN/PINES

Who	When	What
GLA	05/13/2021	INSPECTION

Land Value Estimates for Land Table 4010.LAND VALUES

Description	Frontage	Depth	* Factors * Front	Depth	Rate	%Adj.	Reason	Value
ORLAND HID	94.00	0.00	1.0000	1.0000	233	100		21,902
94 Actual Front Feet, 0.00 Total Acres							Total Est. Land Value =	21,902

Year	Land Value	Building Value	Assessed Value	Board of Review	Tribunal/ Other	Taxable Value
2024	11,000	23,900	34,900			18,115C
2023	6,600	19,600	26,200			17,253C
2022	5,600	16,700	22,300			16,432C
2021	4,700	16,700	21,400			15,908C

The Equalizer. Copyright (c) 1999 - 2009. Licensed To: Township of Greenwood, County of Wexford, Michigan

*** Information herein deemed reliable but not guaranteed***

Building Type

X	Single Family
	Mobile Home
	Town Home
	Duplex
	A-Frame
X	Wood Frame

Building Style: PLAIN

Yr Built	Remodeled
0	0

Condition: Fair

Room List

	Basement
	1st Floor
	2nd Floor
	Bedrooms

(1) Exterior

	Wood/Shingle
X	Aluminum/Vinyl
	Brick
X	Insulation

(2) Windows

	Many		Large
X	Avg.	X	Avg.
	Few		Small

	Wood Sash
	Metal Sash
X	Vinyl Sash
	Double Hung
	Horiz. Slide
	Casement
	Double Glass
	Patio Doors
X	Storms & Screens

(3) Roof

X	Gable		Gambrel
	Hip		Mansard
	Flat		Shed

X	Asphalt Shingle

Chimney:

(3) Roof (cont.)

	Eavestrough
X	Insulation
0	Front Overhang
0	Other Overhang

(4) Interior

X	Drywall		Plaster
	Paneled		Wood T&G

Trim & Decoration

	Ex	X	Ord		Min

Size of Closets

	Lg	X	Ord		Small

Doors:		Solid	X	H.C.	

(5) Floors

Kitchen:
Other: Linoleum
Other: Carpeted

(6) Ceilings

X	Drywall

(7) Excavation

Basement: 0 S.F.
Crawl: 436 S.F.
Slab: 0 S.F.
Height to Joists: 0.0

(8) Basement

	Conc. Block
	Poured Conc.
	Stone
	Treated Wood
	Concrete Floor

(9) Basement Finish

	Recreation SF
	Living SF
	Walkout Doors (B)
	No Floor SF
	Walkout Doors (A)

(10) Floor Support

Joists:
Unsupported Len:
Cntr.Sup:

(11) Heating/Cooling

X	Gas		Oil		Elec.
	Wood		Coal		Steam

	Forced Air w/o Ducts
X	Forced Air w/ Ducts
	Forced Hot Water
	Electric Baseboard
	Elec. Ceil. Radiant
	Radiant (in-floor)
	Electric Wall Heat
	Space Heater
	Wall/Floor Furnace
	Forced Heat & Cool
	Heat Pump
	No Heating/Cooling

	Central Air
	Wood Furnace

(12) Electric

150	Amps Service

No./Qual. of Fixtures

	Ex.	X	Ord.		Min

No. of Elec. Outlets

	Many	X	Ave.		Few

(13) Plumbing

	Average Fixture(s)
1	3 Fixture Bath
	2 Fixture Bath
	Softener, Auto
	Softener, Manual
	Solar Water Heat
	No Plumbing
	Extra Toilet
	Extra Sink
	Separate Shower
	Ceramic Tile Floor
	Ceramic Tile Wains
	Ceramic Tub Alcove
	Vent Fan

(14) Water/Sewer

	Public Water
	Public Sewer
1	Water Well
1	1000 Gal Septic
	2000 Gal Septic

Lump Sum Items:

(15) Built-ins

	Appliance Allow.
	Cook Top
	Dishwasher
	Garbage Disposal
	Bath Heater
	Vent Fan
	Hot Tub
	Unvented Hood
	Vented Hood
	Intercom
	Jacuzzi Tub
	Jacuzzi repl.Tub
	Oven
	Microwave
	Standard Range
	Self Clean Range
	Sauna
	Trash Compactor
	Central Vacuum
	Security System

(15) Fireplaces

	Interior 1 Story
	Interior 2 Story
	2nd/Same Stack
	Two Sided
	Exterior 1 Story
	Exterior 2 Story
	Prefab 1 Story
	Prefab 2 Story
	Heat Circulator
	Raised Hearth
	Wood Stove
	Direct-Vented Gas

Class: D
Effec. Age: 48
Floor Area: 436
Total Base New : 70,907 E.C.F.
Total Depr Cost: 36,871 X 1.297
Estimated T.C.V: 47,822

(16) Porches/Decks

Area	Type
28	WPP
124	WCP (1 Story)

(17) Garage

Year Built:
Car Capacity:
Class:
Exterior:
Brick Ven.:
Stone Ven.:
Common Wall:
Foundation:
Finished ?:
Auto. Doors:
Mech. Doors:
Area:
% Good:
Storage Area:
No Conc. Floor:

Bsmnt Garage:

Carport Area:
Roof:

Cost Est. for Res. Bldg: 1 Single Family PLAIN Cls D Blt 0
(11) Heating System: Forced Air w/ Ducts
Ground Area = 436 SF Floor Area = 436 SF.
Phy/Ab.Phy/Func/Econ/Comb. % Good=52/100/100/100/52
Building Areas

Stories	Exterior	Foundation	Size	Cost New	Depr. Cost
1 Story	Siding	Crawl Space	436		
			Total:	55,115	28,660
Other Additions/Adjustments					
Water/Sewer					
1000 Gal Septic			1	4,293	2,232
Water Well, 100 Feet			1	5,545	2,883
Porches					
WPP			28	1,316	684
WCP (1 Story)			124	4,638	2,412
			Totals:	70,907	36,871

Notes:

ECF (RESIDENTIAL) 1.297 => TCV: 47,822

*** Information herein deemed reliable but not guaranteed***

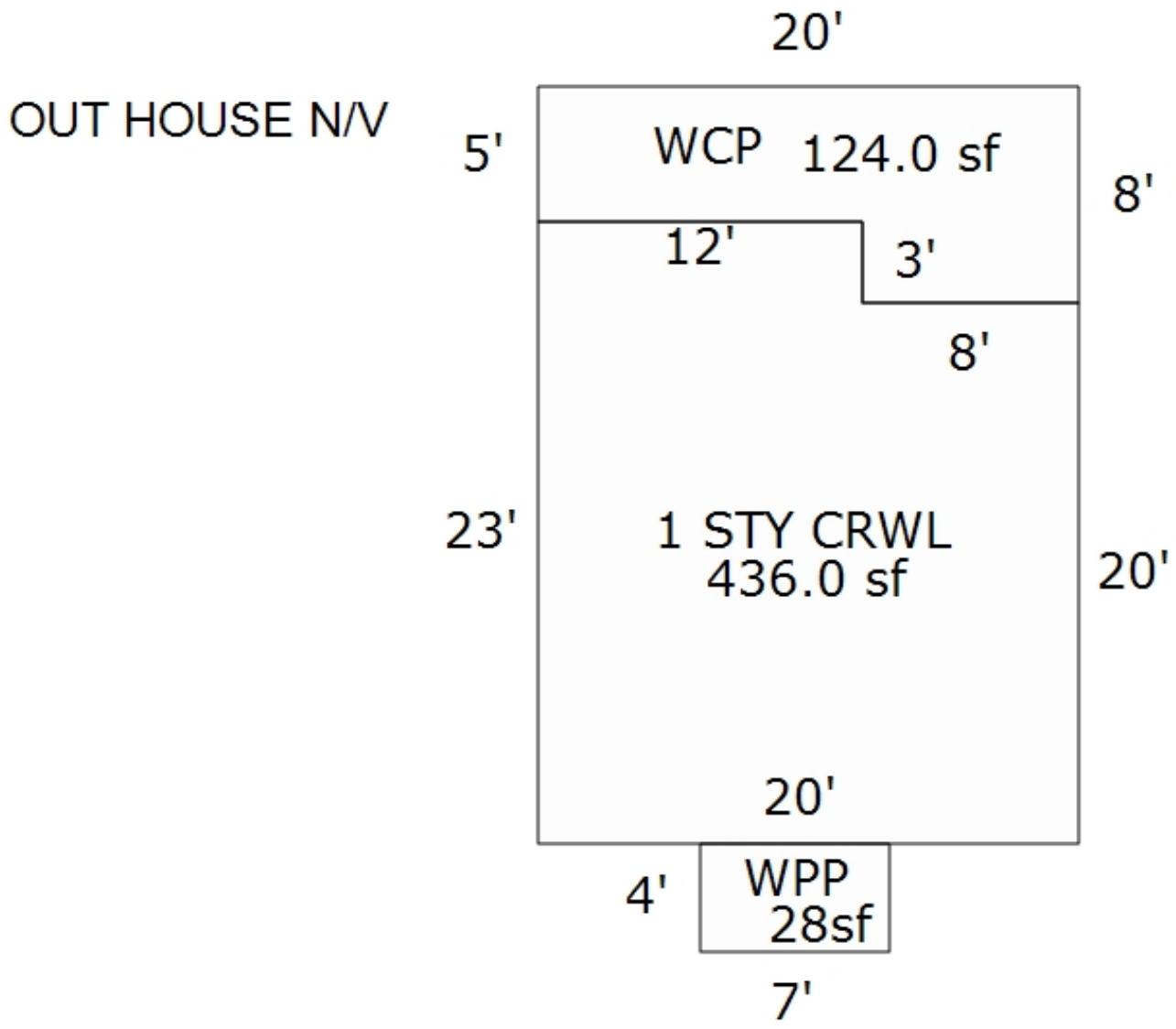

*** Information herein deemed reliable but not guaranteed***

Parcel Number: 2410-OH-02 Jurisdiction: GREENWOOD TWP County: WEXFORD Printed on 02/15/2024

Grantor	Grantee	Sale Price	Sale Date	Inst. Type	Terms of Sale	Liber & Page	Verified By	Prcnt. Trans.
GRIFFIS, BRAD D & JENNIFER	GRIFFIS, BRAD D & JENNIFEF	100	11/18/2020	QC	14-INTO/OUT OF TRUST	688/1988	AGENT	0.0
DEAN, BETTY JANE	GRIFFIS, BRAD & JENNIFER	10,000	08/05/2015	QC	21-NOT USED/OTHER	675/2733	DEED	100.0

Property Address

N 27 RD

Owner's Name/Address

GRIFFIS, BRAD D & JENNIFER L TRUST
12725 LEISURE LANE
HORTON MI 49246

Tax Description

LOT 2 ORLANDO'S HIDEAWAY GW. SEC. 31 T24N R10W -MANTON- SPLIT ON 05/23/2011 FROM 2410-OH-01;

Comments/Influences

DE ROBERT DEAN 11/02/10 638/176
Split/Comb. on 05/23/2011 completed / /
/ deb ;
Parent Parcel(s): 2410-OH-01;
Child Parcel(s): 2410-OH-01-01, 2410-OH-02;

Class: RESIDENTIAL-VACANT Zoning:

School: MANTON CONSOLIDATED SCHOOLS

P.R.E. 0%

:

2024 Est TCV 34,950

Building Permit(s)	Date	Number	Status

	Improved	X	Vacant

	Public Improvements
X	Dirt Road
X	Gravel Road
	Paved Road
	Storm Sewer
	Sidewalk
	Water
	Sewer
X	Electric
	Gas
	Curb
	Street Lights
	Standard Utilities
	Underground Utils.

	Topography of Site
	Level
X	Rolling
	Low
X	High
	Landscaped
	Swamp
X	Wooded
	Pond
	Waterfront
	Ravine
	Wetland
	Flood Plain
X	

Who	When	What
GLA	10/31/2022	INSPECTION

Land Value Estimates for Land Table 4010.LAND VALUES

Description	Frontage	Depth	* Factors * Front	Depth	Rate	%Adj.	Reason	Value
ORLAND HID	150.00	0.00	1.0000	1.0000	233	100		34,950
150 Actual Front Feet, 0.00 Total Acres							Total Est. Land Value =	34,950

Year	Land Value	Building Value	Assessed Value	Board of Review	Tribunal/ Other	Taxable Value
2024	17,500	0	17,500			5,582C
2023	10,500	0	10,500			5,317C
2022	9,000	0	9,000			5,064C
2021	7,500	0	7,500			4,903C

The Equalizer. Copyright (c) 1999 - 2009.
Licensed To: Township of Greenwood, County of Wexford, Michigan

*** Information herein deemed reliable but not guaranteed***

Parcel Number: 2410-OH-03 Jurisdiction: GREENWOOD TWP County: WEXFORD Printed on 02/15/2024

Grantor	Grantee	Sale Price	Sale Date	Inst. Type	Terms of Sale	Liber & Page	Verified By	Prcnt. Trans.
DEAN, BETTY J	DEAN, BRUCE WAYNE & TAMMY	0	08/16/2016	QC	09-FAMILY	678 /2305	DEED	0.0

Property Address

N 27 RD

Owner's Name/Address

DEAN, BRUCE WAYNE & TAMMY LYNN
12921 MOSCOW ROAD
HANOVER MI 49241

Tax Description

LOT 3 ORLANDO'S HIDEAWAY GW. SEC. 31 T24N R10W -MANTON-

Comments/Influences

DC ROBERT LEE DEAN 11/02/10 638/176

Class: RESIDENTIAL-VACANT Zoning:

School: MANTON CONSOLIDATED SCHOOLS

P.R.E. 0%

:

2024 Est TCV 34,950

Building Permit(s)	Date	Number	Status

Improved | X | Vacant

Public Improvements

	Dirt Road
X	Gravel Road
	Paved Road
	Storm Sewer
	Sidewalk
	Water
	Sewer
X	Electric
	Gas
	Curb
	Street Lights
	Standard Utilities
	Underground Utils.

Topography of Site

	Level
X	Rolling
	Low
X	High
	Landscaped
	Swamp
X	Wooded
	Pond
	Waterfront
	Ravine
	Wetland
	Flood Plain
X	PINES

Who When What

GLA 10/31/2022 INSPECTION

Land Value Estimates for Land Table 4010.LAND VALUES

Description	Frontage	Depth	* Factors * Front	Depth	Rate	%Adj.	Reason	Value
ORLAND HID	150.00	0.00	1.0000	1.0000	233	100		34,950
150 Actual Front Feet, 0.00 Total Acres							Total Est. Land Value =	34,950

Year	Land Value	Building Value	Assessed Value	Board of Review	Tribunal/ Other	Taxable Value
2024	17,500	0	17,500			3,399C
2023	10,500	0	10,500			3,238C
2022	9,000	0	9,000			3,084C
2021	7,500	0	7,500			2,986C

The Equalizer. Copyright (c) 1999 - 2009. Licensed To: Township of Greenwood, County of Wexford, Michigan

*** Information herein deemed reliable but not guaranteed***

Parcel Number: 2410-OH-04 Jurisdiction: GREENWOOD TWP County: WEXFORD Printed on 02/15/2024

Grantor	Grantee	Sale Price	Sale Date	Inst. Type	Terms of Sale	Liber & Page	Verified By	Prcnt. Trans.
DEAN, ROBERT L.	GALVIN, WAYNE	4,200	08/13/1993	LC	03-ARM'S LENGTH	335:700	DEED	0.0

Property Address

N 27 RD

Owner's Name/Address

GALVIN, WAYNE
P O BOX 35
223 PLEASANT APT 3
CHARLOTTE MI 48813

Tax Description

LOT 4 ORLANDO'S HIDEAWAY GW. SEC. 31 T24N R10W -MANTON-

Comments/Influences

Class: RESIDENTIAL-VACANT Zoning:

School: MANTON CONSOLIDATED SCHOOLS

P.R.E. 0%

:

2024 Est TCV 34,950

Building Permit(s)	Date	Number	Status

	Improved	X	Vacant

	Public Improvements
	Dirt Road
X	Gravel Road
	Paved Road
	Storm Sewer
	Sidewalk
	Water
	Sewer
X	Electric
	Gas
	Curb
	Street Lights
	Standard Utilities
	Underground Utils.

	Topography of Site
	Level
X	Rolling
	Low
X	High
	Landscaped
	Swamp
X	Wooded
	Pond
	Waterfront
	Ravine
	Wetland
	Flood Plain
X	OPEN/PINES

Who	When	What
GLA	10/31/2022	INSPECTION

Land Value Estimates for Land Table 4010.LAND VALUES

Description	Frontage	Depth	* Factors * Front	Depth	Rate	%Adj.	Reason	Value
ORLAND HID	150.00	0.00	1.0000	1.0000	233	100		34,950
150 Actual Front Feet, 0.00 Total Acres							Total Est. Land Value =	34,950

Year	Land Value	Building Value	Assessed Value	Board of Review	Tribunal/ Other	Taxable Value
2024	17,500	0	17,500			3,399C
2023	10,500	0	10,500			3,238C
2022	9,000	0	9,000			3,084C
2021	7,500	0	7,500			2,986C

The Equalizer. Copyright (c) 1999 - 2009. Licensed To: Township of Greenwood, County of Wexford, Michigan

*** Information herein deemed reliable but not guaranteed***

Parcel Number: 2410-OH-05 Jurisdiction: GREENWOOD TWP County: WEXFORD Printed on 02/15/2024

Grantor	Grantee	Sale Price	Sale Date	Inst. Type	Terms of Sale	Liber & Page	Verified By	Prcnt. Trans.
DEAN, ROBERT L.	GALVIN, WAYNE	4,200	04/29/1989	LC	03-ARM'S LENGTH	315:372	DEED	0.0

Property Address	Class: RESIDENTIAL-IMPROV	Zoning:	Building Permit(s)	Date	Number	Status
6900 N 27 RD	School: MANTON CONSOLIDATED SCHOOLS					
	P.R.E. 0%					
Owner's Name/Address	:					
GALVIN, WAYNE P O BOX 35 223 PLEASANT APT 3 CHARLOTTE MI 48813	2024 Est TCV 83,390 TCV/TFA: 90.64					

Tax Description

LOT 5 ORLANDO'S HIDEAWAY GW. SEC. 31 T24N R10W -MANTON-

Comments/Influences

X	Improved		Vacant

	Public Improvements
	Dirt Road
X	Gravel Road
	Paved Road
	Storm Sewer
	Sidewalk
	Water
	Sewer
X	Electric
	Gas
	Curb
	Street Lights
	Standard Utilities
	Underground Utils.

	Topography of Site
	Level
X	Rolling
X	Low
X	High
	Landscaped
	Swamp
X	Wooded
	Pond
	Waterfront
	Ravine
	Wetland
	Flood Plain
X	OPEN/PINES

Who	When	What
GLA	05/13/2021	INSPECTION

Land Value Estimates for Land Table 4010.LAND VALUES

Description	Frontage	Depth	* Factors * Front	Depth	Rate	%Adj.	Reason	Value
ORLAND HID	150.00	0.00	1.0000	1.0000	233	100		34,950
150 Actual Front Feet, 0.00 Total Acres							Total Est. Land Value =	34,950

Year	Land Value	Building Value	Assessed Value	Board of Review	Tribunal/ Other	Taxable Value
2024	17,500	24,200	41,700			5,857C
2023	10,500	19,700	30,200			5,579C
2022	9,000	16,600	25,600			5,314C
2021	7,500	14,100	21,600			5,145C

The Equalizer. Copyright (c) 1999 - 2009. Licensed To: Township of Greenwood, County of Wexford, Michigan

*** Information herein deemed reliable but not guaranteed***

Building Type

	Single Family
X	Mobile Home
	Town Home
	Duplex
	A-Frame

X	Wood Frame

Building Style: SWT/DWT

Yr Built	Remodeled
0	0

Condition: Good

Room List

	Basement
	1st Floor
	2nd Floor
	Bedrooms

(1) Exterior

	Wood/Shingle
X	Aluminum/Vinyl
	Brick
X	Insulation

(2) Windows

	Many		Large
X	Avg.	X	Avg.
	Few		Small

	Wood Sash
	Metal Sash
X	Vinyl Sash
	Double Hung
	Horiz. Slide
	Casement
	Double Glass
	Patio Doors
X	Storms & Screens

(3) Roof

X	Gable		Gambrel
	Hip		Mansard
	Flat		Shed

X	Asphalt Shingle

Chimney:

(3) Roof (cont.)

	Eavestrough
X	Insulation
0	Front Overhang
0	Other Overhang

(4) Interior

X	Drywall		Plaster
	Paneled		Wood T&G

Trim & Decoration

	Ex	X	Ord		Min

Size of Closets

	Lg	X	Ord		Small

Doors:		Solid	X	H.C.	

(5) Floors

Kitchen:
Other: Linoleum
Other: Carpeted

(6) Ceilings

X	Drywall		

(7) Excavation

Basement: 0 S.F.
Crawl: 552 S.F.
Slab: 0 S.F.
Height to Joists: 0.0

(8) Basement

	Conc. Block
	Poured Conc.
	Stone
	Treated Wood
	Concrete Floor

(9) Basement Finish

	Recreation SF
	Living SF
	Walkout Doors (B)
	No Floor SF
	Walkout Doors (A)

(10) Floor Support

Joists:
Unsupported Len:
Cntr.Sup:

(11) Heating/Cooling

X	Gas		Oil		Elec.
	Wood		Coal		Steam

X	Forced Warm Air
	Wall Furnace
	Warm & Cool Air
	Heat Pump

	Central Air
	Wood Furnace

(12) Electric

150	Amps Service

No./Qual. of Fixtures

	Ex.	X	Ord.		Min

No. of Elec. Outlets

	Many	X	Ave.		Few

(13) Plumbing

1	Average Fixture(s)
	3 Fixture Bath
	2 Fixture Bath
	Softener, Auto
	Softener, Manual
	Solar Water Heat
	No Plumbing
	Extra Toilet
	Extra Sink
	Separate Shower
	Ceramic Tile Floor
	Ceramic Tile Wains
	Ceramic Tub Alcove
	Vent Fan

(14) Water/Sewer

	Public Water
	Public Sewer
1	Water Well
1	1000 Gal Septic
	2000 Gal Septic

Lump Sum Items:

(15) Built-ins

	Appliance Allow.
	Cook Top
	Dishwasher
	Garbage Disposal
	Bath Heater
	Vent Fan
	Hot Tub
	Unvented Hood
	Vented Hood
	Intercom
	Jacuzzi Tub
	Jacuzzi repl.Tub
	Oven
	Microwave
	Standard Range
	Self Clean Range
	Sauna
	Trash Compactor
	Central Vacuum
	Security System

(15) Fireplaces

	Interior 1 Story
	Interior 2 Story
	2nd/Same Stack
	Two Sided
	Exterior 1 Story
	Exterior 2 Story
	Prefab 1 Story
	Prefab 2 Story
	Heat Circulator
	Raised Hearth
	Wood Stove
	Direct-Vented Gas

Class: Fair
Effec. Age: 20
Floor Area:
Total Base New : 81,192 E.C.F.
Total Depr Cost: 37,348 X 1.297
Estimated T.C.V: 48,440

(16) Porches/Decks

Area	Type

(17) Garage

Year Built:
Car Capacity:
Class:
Exterior:
Brick Ven.:
Stone Ven.:
Common Wall:
Foundation:
Finished ?:
Auto. Doors:
Mech. Doors:
Area:
% Good:
Storage Area:
No Conc. Floor:

Bsmnt Garage:

Carport Area:
Roof:

Cost Est. for Res. Bldg: 1 Mobile Home SWT/DWT Cls Fair Blt 0
(11) Heating System: Wall Furnace
Ground Area = 920 SF Floor Area = 920 SF.
Phy/Ab.Phy/Func/Econ/Comb. % Good=46/100/100/100/46

Building Areas

Type	Ext. Walls	Roof/Fnd.	Size	Cost New	Depr. Cost
Main Home	Ribbed	Metal	368		
Addition	Siding	Crawl	552		
			Total:	62,396	28,701
Other Additions/Adjustments					
Water/Sewer					
1000 Gal Septic			1	4,582	2,108
Water Well, 100 Feet			1	5,680	2,613
Local Cost Items					
SHED			112	874	402
FREE STANDING ROOF			1058	7,660	3,524
			Totals:	81,192	37,348

Notes:

ECF (RESIDENTIAL) 1.297 => TCV: 48,440

*** Information herein deemed reliable but not guaranteed***

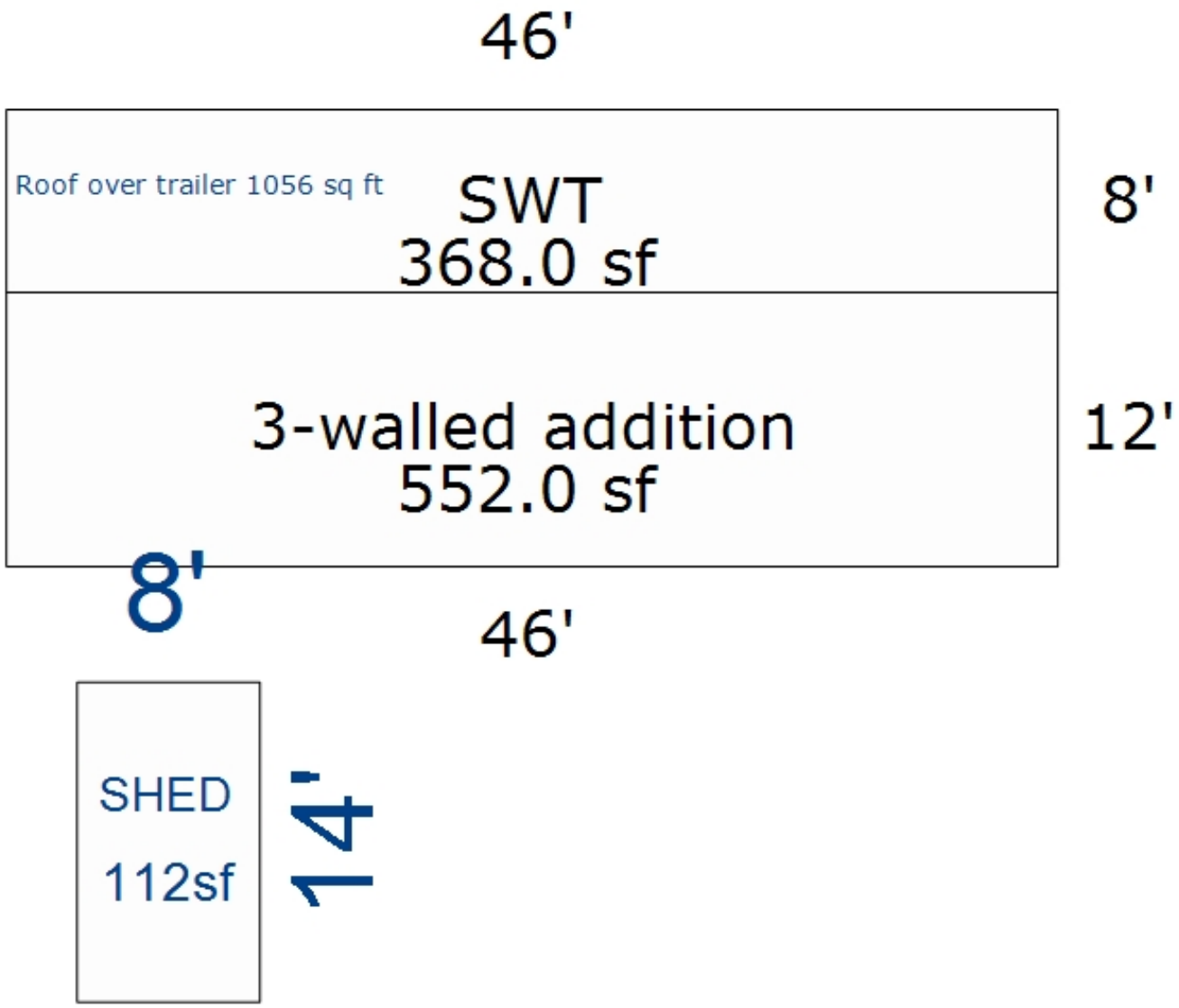

*** Information herein deemed reliable but not guaranteed***

Parcel Number: 2410-OH-06 Jurisdiction: GREENWOOD TWP County: WEXFORD Printed on 02/15/2024

Grantor	Grantee	Sale Price	Sale Date	Inst. Type	Terms of Sale	Liber & Page	Verified By	Prcnt. Trans.
DEAN, ROBERT L.	MASON, TERRENCE	5,500	09/20/1986	WD	03-ARM'S LENGTH	303:372	DEED	0.0

Property Address

N 27 RD

Owner's Name/Address

MASON, TERRENCE
& JANEEN
9149 W GRAND RIVER AVE
GRAND LEDGE MI 48837

Tax Description

LOT 6 ORLANDO'S HIDEAWAY GW. SEC. 31 T24N R10W -MANTON-

Comments/Influences

Class: RESIDENTIAL-IMPROV Zoning:

School: MANTON CONSOLIDATED SCHOOLS

P.R.E. 0%

:

2024 Est TCV 49,306 TCV/TFA: 145.88

Building Permit(s)	Date	Number	Status

X	Improved		Vacant

	Public Improvements
	Dirt Road
X	Gravel Road
	Paved Road
	Storm Sewer
	Sidewalk
	Water
	Sewer
X	Electric
	Gas
	Curb
	Street Lights
	Standard Utilities
	Underground Utils.

	Topography of Site
	Level
X	Rolling
	Low
X	High
	Landscaped
	Swamp
X	Wooded
	Pond
	Waterfront
	Ravine
	Wetland
	Flood Plain
X	OPEN/PINES

Who	When	What
GLA	05/13/2021	INSPECTION

Land Value Estimates for Land Table 4010.LAND VALUES

Description	Frontage	Depth	* Factors * Front	Depth	Rate	%Adj.	Reason	Value
ORLAND HID	150.00	0.00	1.0000	1.0000	233	100		34,950
150 Actual Front Feet, 0.00 Total Acres							Total Est. Land Value =	34,950

Year	Land Value	Building Value	Assessed Value	Board of Review	Tribunal/ Other	Taxable Value
2024	17,500	7,200	24,700			3,487C
2023	10,500	5,800	16,300			3,321C
2022	9,000	4,800	13,800			3,163C
2021	7,500	4,800	12,300			3,062C

The Equalizer. Copyright (c) 1999 - 2009.
Licensed To: Township of Greenwood, County of Wexford, Michigan

*** Information herein deemed reliable but not guaranteed***

Building Type

X	Single Family
	Mobile Home
	Town Home
	Duplex
	A-Frame
X	Wood Frame

Building Style: PLAIN

Yr Built	Remodeled
0	0

Condition: Good

Room List

	Basement
	1st Floor
	2nd Floor
	Bedrooms

(1) Exterior

	Wood/Shingle
X	Aluminum/Vinyl
	Brick
X	Insulation

(2) Windows

X	Many Avg. Few	X	Large Avg. Small

	Wood Sash
	Metal Sash
X	Vinyl Sash
	Double Hung
	Horiz. Slide
	Casement
	Double Glass
	Patio Doors
X	Storms & Screens

(3) Roof

X	Gable		Gambrel
	Hip		Mansard
	Flat		Shed

X	Asphalt Shingle

Chimney:

(3) Roof (cont.)

	Eavestrough
X	Insulation
0	Front Overhang
0	Other Overhang

(4) Interior

X	Drywall		Plaster
	Paneled		Wood T&G

Trim & Decoration

	Ex	X	Ord		Min

Size of Closets

	Lg	X	Ord		Small

Doors:		Solid	X	H.C.	

(5) Floors

Kitchen:
Other: Linoleum
Other: Carpeted

(6) Ceilings

X	Drywall

(7) Excavation

Basement: 338 S.F.
Crawl: 0 S.F.
Slab: 0 S.F.
Height to Joists: 0.0

(8) Basement

	Conc. Block
	Poured Conc.
	Stone
	Treated Wood
	Concrete Floor

(9) Basement Finish

	Recreation SF
	Living SF
	Walkout Doors (B)
	No Floor SF
	Walkout Doors (A)

(10) Floor Support

Joists:
Unsupported Len:
Cntr.Sup:

(11) Heating/Cooling

X	Gas		Oil		Elec.
	Wood		Coal		Steam

	Forced Air w/o Ducts
X	Forced Air w/ Ducts
	Forced Hot Water
	Electric Baseboard
	Elec. Ceil. Radiant
	Radiant (in-floor)
	Electric Wall Heat
	Space Heater
	Wall/Floor Furnace
	Forced Heat & Cool
	Heat Pump
	No Heating/Cooling

	Central Air
	Wood Furnace

(12) Electric

150	Amps Service

No./Qual. of Fixtures

	Ex.	X	Ord.		Min

No. of Elec. Outlets

	Many	X	Ave.		Few

(13) Plumbing

	Average Fixture(s)
	3 Fixture Bath
	2 Fixture Bath
	Softener, Auto
	Softener, Manual
	Solar Water Heat
	No Plumbing
	Extra Toilet
	Extra Sink
	Separate Shower
	Ceramic Tile Floor
	Ceramic Tile Wains
	Ceramic Tub Alcove
	Vent Fan

(14) Water/Sewer

	Public Water
	Public Sewer
	Water Well
	1000 Gal Septic
	2000 Gal Septic

Lump Sum Items:

(15) Built-ins

	Appliance Allow.
	Cook Top
	Dishwasher
	Garbage Disposal
	Bath Heater
	Vent Fan
	Hot Tub
	Unvented Hood
	Vented Hood
	Intercom
	Jacuzzi Tub
	Jacuzzi repl.Tub
	Oven
	Microwave
	Standard Range
	Self Clean Range
	Sauna
	Trash Compactor
	Central Vacuum
	Security System

(15) Fireplaces

	Interior 1 Story
	Interior 2 Story
	2nd/Same Stack
	Two Sided
	Exterior 1 Story
	Exterior 2 Story
	Prefab 1 Story
	Prefab 2 Story
	Heat Circulator
	Raised Hearth
	Wood Stove
	Direct-Vented Gas

Class: D
Effec. Age: 65
Floor Area: 338
Total Base New : 49,195 E.C.F.
Total Depr Cost: 11,069 X 1.297
Estimated T.C.V: 14,356

(16) Porches/Decks

Area	Type

(17) Garage

Year Built:
Car Capacity:
Class:
Exterior:
Brick Ven.:
Stone Ven.:
Common Wall:
Foundation:
Finished ?:
Auto. Doors:
Mech. Doors:
Area:
% Good:
Storage Area:
No Conc. Floor:

Bsmnt Garage:

Carport Area:
Roof:

Cost Est. for Res. Bldg: 1 Single Family PLAIN Cls D Blt 0
(11) Heating System: Forced Air w/ Ducts
Ground Area = 338 SF Floor Area = 338 SF.
Phy/Ab.Phy/Func/Econ/Comb. % Good=45/100/50/100/22.5
Building Areas

Stories	Exterior	Foundation	Size	Cost New	Depr. Cost
1 Story	Siding	Basement	338		
			Total:	52,463	11,804

Other Additions/Adjustments

Plumbing			
3 Fixture Bath	1	-3,268	-735
	Totals:	49,195	11,069

Notes:
ECF (RESIDENTIAL) 1.297 => TCV: 14,356

*** Information herein deemed reliable but not guaranteed***

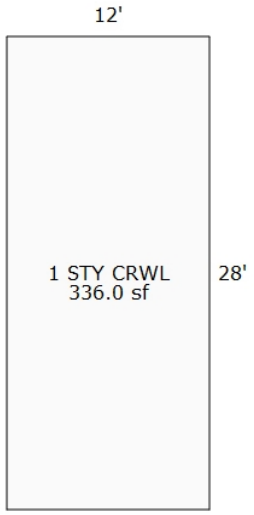

Sketch by Apex Sketch

*** Information herein deemed reliable but not guaranteed***

Parcel Number: 2410-OH-07 Jurisdiction: GREENWOOD TWP County: WEXFORD Printed on 02/15/2024

Grantor	Grantee	Sale Price	Sale Date	Inst. Type	Terms of Sale	Liber & Page	Verified By	Prcnt. Trans.
FEDERAL NATIONAL MORTGAGE	EDWARDS, DUSTIN	19,900	03/17/2009	WD	11-FROM LENDING INSTITUTI	619/1271	DEED	100.0
CHASE HOME FINANCE LLC	FEDERAL NATIONAL MORTGAGE	0	03/18/2008	QC	17-LENDING TO LENDING	609/2007	DEED	0.0
MARSHALL, RYAN	CHASE HOME FINANCE LLC	50,625	02/29/2008	SD	21-NOT USED/OTHER	609/459	DEED	0.0
BERG, CHRISTOPHER & TAMMY	MARSHALL, RYAN	55,000	11/01/2000	WD	03-ARM'S LENGTH	377:134	DEED	0.0

Property Address

6860 N 27 RD

Owner's Name/Address

EDWARDS, DUSTIN
6860 N 27 RD
MANTON MI 49663

Tax Description

LOT 7 ORLANDO'S HIDEAWAY GW. SEC. 31 T24N R10W -MANTON-

Comments/Influences

Class: RESIDENTIAL-IMPROV Zoning:

School: MANTON CONSOLIDATED SCHOOLS

P.R.E. 100% / /

:

2024 Est TCV 148,702 TCV/TFA: 132.77

Building Permit(s)	Date	Number	Status

X	Improved		Vacant

	Public Improvements
	Dirt Road
X	Gravel Road
	Paved Road
	Storm Sewer
	Sidewalk
	Water
	Sewer
X	Electric
	Gas
	Curb
	Street Lights
	Standard Utilities
	Underground Utils.

	Topography of Site
	Level
X	Rolling
	Low
X	High
	Landscaped
	Swamp
X	Wooded
	Pond
	Waterfront
	Ravine
	Wetland
	Flood Plain
X	OPEN/PINES

Who	When	What
GLA	05/13/2021	INSPECTION

Land Value Estimates for Land Table 4010.LAND VALUES

Description	Frontage	Depth	* Factors * Front	Depth	Rate	%Adj.	Reason	Value
ORLAND HID	150.00	0.00	1.0000	1.0000	233	100		34,950
150 Actual Front Feet, 0.00 Total Acres							Total Est. Land Value =	34,950

Year	Land Value	Building Value	Assessed Value	Board of Review	Tribunal/ Other	Taxable Value
2024	17,500	56,900	74,400			37,691C
2023	10,500	46,600	57,100			35,897C
2022	9,000	39,500	48,500			34,188C
2021	7,500	40,100	47,600			33,096C

The Equalizer. Copyright (c) 1999 - 2009.
Licensed To: Township of Greenwood, County of Wexford, Michigan

*** Information herein deemed reliable but not guaranteed***

Building Type

X	Single Family
	Mobile Home
	Town Home
	Duplex
	A-Frame
X	Wood Frame

Building Style: PLAIN

Yr Built	Remodeled
0	0

Condition: Good

Room List

	Basement
	1st Floor
	2nd Floor
	Bedrooms

(1) Exterior

	Wood/Shingle
X	Aluminum/Vinyl
	Brick
X	Insulation

(2) Windows

	Many		Large
X	Avg.	X	Avg.
	Few		Small

	Wood Sash
	Metal Sash
X	Vinyl Sash
	Double Hung
	Horiz. Slide
	Casement
	Double Glass
	Patio Doors
X	Storms & Screens

(3) Roof

X	Gable		Gambrel
	Hip		Mansard
	Flat		Shed

X	Asphalt Shingle

Chimney:

(3) Roof (cont.)

	Eavestrough
X	Insulation
0	Front Overhang
0	Other Overhang

(4) Interior

X	Drywall		Plaster
	Paneled		Wood T&G

Trim & Decoration

	Ex	X	Ord		Min

Size of Closets

	Lg	X	Ord		Small

Doors:		Solid	X	H.C.	

(5) Floors

Kitchen:
Other: Linoleum
Other: Carpeted

(6) Ceilings

X	Drywall		

(7) Excavation

Basement: 0 S.F.
Crawl: 1120 S.F.
Slab: 0 S.F.
Height to Joists: 0.0

(8) Basement

	Conc. Block
	Poured Conc.
	Stone
	Treated Wood
	Concrete Floor

(9) Basement Finish

	Recreation SF
	Living SF
	Walkout Doors (B)
	No Floor SF
	Walkout Doors (A)

(10) Floor Support

Joists:
Unsupported Len:
Cntr.Sup:

(11) Heating/Cooling

X	Gas		Oil		Elec.
	Wood		Coal		Steam

	Forced Air w/o Ducts
X	Forced Air w/ Ducts
	Forced Hot Water
	Electric Baseboard
	Elec. Ceil. Radiant
	Radiant (in-floor)
	Electric Wall Heat
	Space Heater
	Wall/Floor Furnace
	Forced Heat & Cool
	Heat Pump
	No Heating/Cooling

	Central Air
	Wood Furnace

(12) Electric

150	Amps Service

No./Qual. of Fixtures

	Ex.	X	Ord.		Min

No. of Elec. Outlets

	Many	X	Ave.		Few

(13) Plumbing

	Average Fixture(s)
1	3 Fixture Bath
	2 Fixture Bath
	Softener, Auto
	Softener, Manual
	Solar Water Heat
	No Plumbing
	Extra Toilet
	Extra Sink
	Separate Shower
	Ceramic Tile Floor
	Ceramic Tile Wains
	Ceramic Tub Alcove
	Vent Fan

(14) Water/Sewer

	Public Water
	Public Sewer
1	Water Well
1	1000 Gal Septic
	2000 Gal Septic

Lump Sum Items:

(15) Built-ins

	Appliance Allow.
	Cook Top
	Dishwasher
	Garbage Disposal
	Bath Heater
	Vent Fan
	Hot Tub
	Unvented Hood
	Vented Hood
	Intercom
	Jacuzzi Tub
	Jacuzzi repl.Tub
	Oven
	Microwave
	Standard Range
	Self Clean Range
	Sauna
	Trash Compactor
	Central Vacuum
	Security System

(15) Fireplaces

	Interior 1 Story
	Interior 2 Story
	2nd/Same Stack
	Two Sided
	Exterior 1 Story
	Exterior 2 Story
	Prefab 1 Story
	Prefab 2 Story
	Heat Circulator
	Raised Hearth
	Wood Stove
	Direct-Vented Gas

Class: D
Effec. Age: 44
Floor Area: 1,120
Total Base New : 156,614 E.C.F.
Total Depr Cost: 87,704 X 1.297
Estimated T.C.V: 113,752

(16) Porches/Decks

Area	Type
64	WGEP (1 Story)
192	WCP (1 Story)

(17) Garage

Year Built:
Car Capacity:
Class: D
Exterior: Pole
Brick Ven.: 0
Stone Ven.: 0
Common Wall: Detache
Foundation: 18 Inch
Finished ?:
Auto. Doors: 0
Mech. Doors: 0
Area: 960
% Good: 0
Storage Area: 0
No Conc. Floor: 960

Bsmnt Garage:

Carport Area:
Roof:

Cost Est. for Res. Bldg: 1 Single Family PLAIN Cls D Blt 0
(11) Heating System: Forced Air w/ Ducts
Ground Area = 1120 SF Floor Area = 1120 SF.
Phy/Ab.Phy/Func/Econ/Comb. % Good=56/100/100/100/56
Building Areas

Stories	Exterior	Foundation	Size	Cost New	Depr. Cost
1 Story	Siding	Crawl Space	1,120		
			Total:	120,362	67,403
Other Additions/Adjustments					
Water/Sewer					
1000 Gal Septic			1	4,293	2,404
Water Well, 100 Feet			1	5,545	3,105
Porches					
WGEP (1 Story)			64	6,111	3,422
WCP (1 Story)			192	6,355	3,559
Garages					
Class: D Exterior: Pole (Unfinished)					
Base Cost			960	19,334	10,827
No Concrete Floor			960	-5,386	-3,016
			Totals:	156,614	87,704

Notes:
ECF (RESIDENTIAL) 1.297 => TCV: 113,752

*** Information herein deemed reliable but not guaranteed***

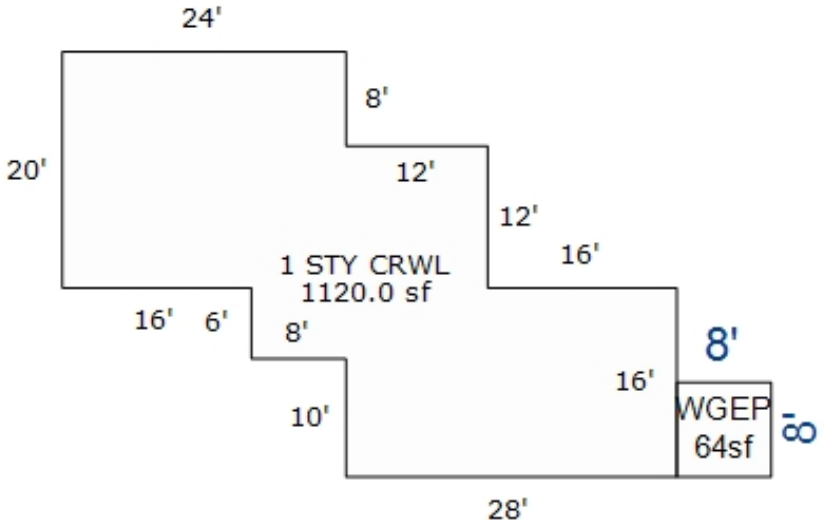

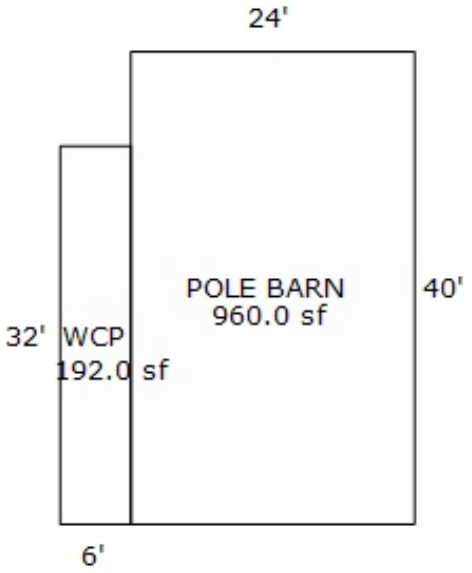

*** Information herein deemed reliable but not guaranteed***

Parcel Number: 2410-OH-09-01 Jurisdiction: GREENWOOD TWP County: WEXFORD Printed on 02/15/2024

Grantor	Grantee	Sale Price	Sale Date	Inst. Type	Terms of Sale	Liber & Page	Verified By	Prcnt. Trans.
GLADYSZ, DAVID M	GLADYSZ, DAVID M LE	0	01/17/2019	QC	18-LIFE ESTATE	684/1126	DEED	0.0
CORNETT, CARL & PEGGY	GLADYSZ, DAVID M	50,000	09/23/2009	WD	31-SPLIT IMPROVED	624/1697	DEED	100.0

Property Address

6820 N 27 RD

Owner's Name/Address

GLADYSZ, DAVID M LE
6820 N 27 RD
MANTON MI 49663

Tax Description

LOT 9 & LOT 8 ORLANDO'S HIDEAWAY GW. SEC. 31 T24N R10W -MANTON- [[ASSESSED W/ OH-08 '00 SPLIT ON 09/28/2009 FROM 2410-OH-09;

Comments/Influences

Split/Comb. on 09/28/2009 completed / / DEB OWNER REQUEST ;
Parent Parcel(s): 2410-OH-09;
Child Parcel(s): 2410-OH-09-01, 2410-OH-08;

The Equalizer. Copyright (c) 1999 - 2009. Licensed To: Township of Greenwood, County of Wexford, Michigan

Class: RESIDENTIAL-IMPROV Zoning:
School: MANTON CONSOLIDATED SCHOOLS
P.R.E. 100% 04/23/2018
:
2024 Est TCV 469,148 TCV/TFA: 268.08

Building Permit(s)	Date	Number	Status
Res. New Construction	04/02/2019	PB19-0036	RECHECK
RESIDENTIAL - NEW	05/04/2004	PE16077	
RESIDENTIAL - REMODEL	05/08/2002	PB10901	
RESIDENTIAL - REMODEL	12/17/1999	PM3850	

X Improved | Vacant

	Public Improvements
	Dirt Road
X	Gravel Road
	Paved Road
	Storm Sewer
	Sidewalk
	Water
	Sewer
X	Electric
	Gas
	Curb
	Street Lights
	Standard Utilities
	Underground Utils.

	Topography of Site
	Level
X	Rolling
X	Low
X	High
	Landscaped
	Swamp
X	Wooded
	Pond
	Waterfront
	Ravine
	Wetland
	Flood Plain
X	OPEN/PINES

Who	When	What
JB	10/23/2023	INSPECTION
GLA	05/13/2021	INSPECTION

Land Value Estimates for Land Table 4010.LAND VALUES

Description	Frontage	Depth	* Factors * Front	Depth	Rate	%Adj.	Reason	Value
ORLAND HID	298.00	0.00	1.0000	1.0000	233	100		69,434
298 Actual Front Feet, 0.00 Total Acres							Total Est. Land Value =	69,434

Land Improvement Cost Estimates

Description	Rate	Size	% Good	Cash Value
D/W/P: 3.5 Concrete	6.63	1512	95	9,524
Wood Frame	38.12	48	50	915
Total Estimated Land Improvements True Cash Value =				10,439

Year	Land Value	Building Value	Assessed Value	Board of Review	Tribunal/ Other	Taxable Value
2024	34,700	199,900	234,600			162,605C
2023	20,900	169,900	190,800			154,862C
2022	17,900	143,400	161,300			147,488C
2021	14,900	138,000	152,900			142,777C

*** Information herein deemed reliable but not guaranteed***

Building Type

X	Single Family
	Mobile Home
	Town Home
	Duplex
	A-Frame
X	Wood Frame

Building Style: PLAIN

Yr Built	Remodeled
1975	0

Condition: Good

Room List

	Basement
	1st Floor
	2nd Floor
	Bedrooms

(1) Exterior

X	Wood/Shingle
	Aluminum/Vinyl
	Brick
X	Insulation

(2) Windows

X	Many Avg. Few	X	Large Avg. Small

	Wood Sash
	Metal Sash
X	Vinyl Sash
	Double Hung
	Horiz. Slide
	Casement
	Double Glass
	Patio Doors
X	Storms & Screens

(3) Roof

X	Gable Hip Flat		Gambrel Mansard Shed
X	Asphalt Shingle		

Chimney:

(3) Roof (cont.)

	Eavestrough
X	Insulation
0	Front Overhang
0	Other Overhang

(4) Interior

X	Drywall Paneled		Plaster Wood T&G

Trim & Decoration

	Ex	X	Ord		Min

Size of Closets

	Lg	X	Ord		Small

Doors:		Solid	X	H.C.	

(5) Floors

Kitchen:
Other: Linoleum
Other: Carpeted

(6) Ceilings

X	Drywall

(7) Excavation

Basement: 1400 S.F.
Crawl: 0 S.F.
Slab: 0 S.F.
Height to Joists: 0.0

(8) Basement

	Conc. Block
	Poured Conc.
	Stone
	Treated Wood
	Concrete Floor

(9) Basement Finish

	Recreation SF
	Living SF
1	Walkout Doors (B)
	No Floor SF
	Walkout Doors (A)

(10) Floor Support

Joists:
Unsupported Len:
Cntr.Sup:

(11) Heating/Cooling

X	Gas Wood		Oil Coal		Elec. Steam	

	Forced Air w/o Ducts
	Forced Air w/ Ducts
	Forced Hot Water
	Electric Baseboard
	Elec. Ceil. Radiant
	Radiant (in-floor)
	Electric Wall Heat
	Space Heater
	Wall/Floor Furnace
X	Forced Heat & Cool
	Heat Pump
	No Heating/Cooling
	Central Air
	Wood Furnace

(12) Electric

150	Amps Service

No./Qual. of Fixtures

	Ex.	X	Ord.		Min

No. of Elec. Outlets

	Many	X	Ave.		Few

(13) Plumbing

2	Average Fixture(s)
	3 Fixture Bath
	2 Fixture Bath
	Softener, Auto
	Softener, Manual
	Solar Water Heat
	No Plumbing
	Extra Toilet
	Extra Sink
	Separate Shower
	Ceramic Tile Floor
	Ceramic Tile Wains
	Ceramic Tub Alcove
	Vent Fan

(14) Water/Sewer

	Public Water
	Public Sewer
1	Water Well
1	1000 Gal Septic
	2000 Gal Septic

Lump Sum Items:

(15) Built-ins

	Appliance Allow.
	Cook Top
	Dishwasher
	Garbage Disposal
	Bath Heater
	Vent Fan
	Hot Tub
	Unvented Hood
	Vented Hood
	Intercom
	Jacuzzi Tub
	Jacuzzi repl.Tub
	Oven
	Microwave
	Standard Range
	Self Clean Range
	Sauna
	Trash Compactor
	Central Vacuum
	Security System

(15) Fireplaces

	Interior 1 Story
	Interior 2 Story
	2nd/Same Stack
	Two Sided
	Exterior 1 Story
	Exterior 2 Story
	Prefab 1 Story
	Prefab 2 Story
	Heat Circulator
	Raised Hearth
1	Wood Stove
	Direct-Vented Gas

Class: C
Effec. Age: 7
Floor Area: 1,750
Total Base New : 354,075 E.C.F.
Total Depr Cost: 300,135 X 1.297
Estimated T.C.V: 389,275

(16) Porches/Decks

Area	Type
472	CCP (1 Story)
16	WCP (1 Story)
112	WGEP (1 Story)
96	Composite

(17) Garage

Year Built:
Car Capacity:
Class: CD
Exterior: Pole
Brick Ven.: 0
Stone Ven.: 0
Common Wall: Detache
Foundation: 18 Inch
Finished ?:
Auto. Doors: 0
Mech. Doors: 0
Area: 2304
% Good: 51
Storage Area: 0
No Conc. Floor: 0

Bsmnt Garage:

Carport Area:
Roof:

Cost Est. for Res. Bldg: 1 Single Family PLAIN Cls C Blt 1975
(11) Heating System: Forced Heat & Cool
Ground Area = 1400 SF Floor Area = 1750 SF.
Phy/Ab.Phy/Func/Econ/Comb. % Good=93/100/100/100/93
Building Areas

Stories	Exterior	Foundation	Size	Cost New	Depr. Cost	
1.25 Story	Siding	Basement	1,400			
			Total:	237,459	220,836	
Other Additions/Adjustments						
Basement, Outside Entrance, Below Grade			1	2,578	2,398	
Plumbing						
3 Fixture Bath			1	4,678	4,351	
Water/Sewer						
1000 Gal Septic			1	4,899	4,556	
Water Well, 100 Feet			1	5,849	5,440	
Porches						
CCP (1 Story)			472	11,625	10,811	
WGEP (1 Story)			112	10,544	9,806	
WCP (1 Story)			16	1,216	1,131	
Garages						
Class: D Exterior: Pole (Unfinished)						
Base Cost			960	19,334	9,860	*5
Class: CD Exterior: Pole (Unfinished)						
Base Cost			2304	50,112	25,557	*5
Fireplaces						
Wood Stove			1	2,570	2,390	
Deck						
Composite			96	2,547	2,369	
Local Cost Items						
SHED			48	374	355	*9

<<<<< Calculations too long. See Valuation printout for complete pricing. >>>>>

*** Information herein deemed reliable but not guaranteed***

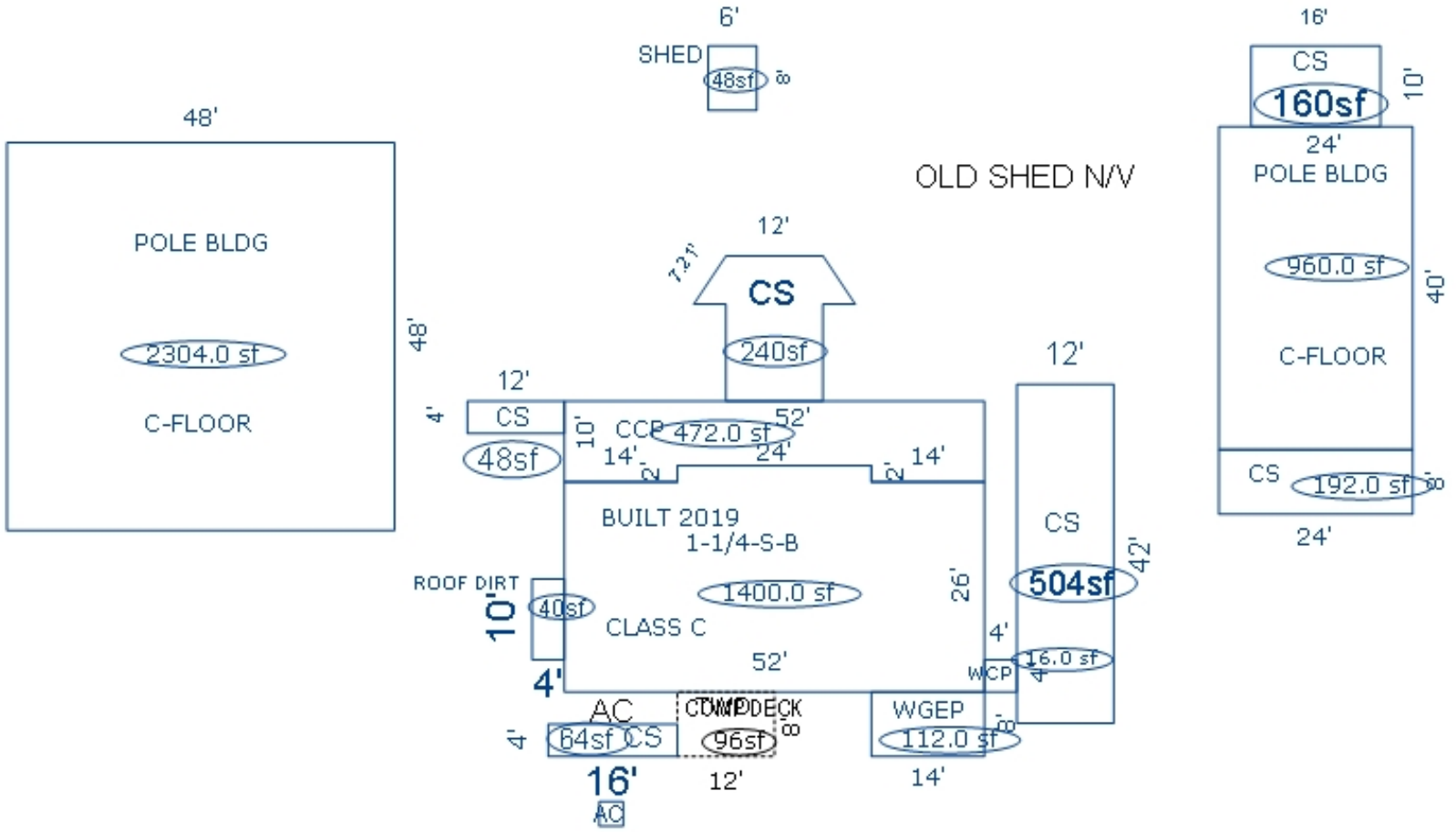

*** Information herein deemed reliable but not guaranteed***

Parcel Number: 2410-OH-10 Jurisdiction: GREENWOOD TWP County: WEXFORD Printed on 02/15/2024

Grantor	Grantee	Sale Price	Sale Date	Inst. Type	Terms of Sale	Liber & Page	Verified By	Prcnt. Trans.
DEROO, ROBERT & BONNIE	DEROO, ROBERT & BONNIE TRU	0	09/23/2020	QC	14-INTO/OUT OF TRUST	2020000005543	AGENT	0.0
DEROO, BERWIN ETAL	DEROO, BERWIN & BONNIE L T	1	09/23/2020	QC	14-INTO/OUT OF TRUST	PTA	AGENT	0.0
DEROO, BERWIN ETAL	DEROO, ROBERT & BONNIE	0	02/13/2018	QC	09-FAMILY	682 /2074	DEED	0.0
DEROO, BERWIN ETAL		0	06/19/2017	QC	21-NOT USED/OTHER	681/2661	DEED	0.0

Property Address

6800 N 27 RD

Owner's Name/Address

DEROO, BERWIN & BONNIE L TRUST
20021 AUDETTE ST
DEARBORN MI 48124

Tax Description

LOT 10 ORLANDO'S HIDEAWAY GW. SEC. 31 T24N R10W -MANTON-

Comments/Influences

Class: RESIDENTIAL-IMPROV Zoning:

School: MANTON CONSOLIDATED SCHOOLS

P.R.E. 0%

:

2024 Est TCV 92,417 TCV/TFA: 143.28

Building Permit(s)	Date	Number	Status

X Improved | Vacant

	Public Improvements
	Dirt Road
X	Gravel Road
	Paved Road
	Storm Sewer
	Sidewalk
	Water
	Sewer
X	Electric
	Gas
	Curb
	Street Lights
	Standard Utilities
	Underground Utils.

	Topography of Site
	Level
X	Rolling
X	Low
X	High
	Landscaped
	Swamp
X	Wooded
	Pond
	Waterfront
	Ravine
	Wetland
	Flood Plain
X	OPEN/PINES

Who	When	What
GLA	05/13/2021	INSPECTION

Land Value Estimates for Land Table 4010.LAND VALUES

Description	Frontage	Depth	* Factors * Front	Depth	Rate	%Adj.	Reason	Value
ORLAND HID	151.00	0.00	1.0000	1.0000	233	100		35,183
151 Actual Front Feet, 0.00 Total Acres							Total Est. Land Value =	35,183

Land Improvement Cost Estimates

Description	Rate	Size	% Good	Cash Value
D/W/P: 4in Concrete	6.11	64	45	176
Total Estimated Land Improvements True Cash Value =				176

Year	Land Value	Building Value	Assessed Value	Board of Review	Tribunal/ Other	Taxable Value
2024	17,600	28,600	46,200			16,760C
2023	10,600	23,500	34,100			15,962C
2022	9,100	19,900	29,000			15,202C
2021	7,600	20,200	27,800			14,717C

The Equalizer. Copyright (c) 1999 - 2009. Licensed To: Township of Greenwood, County of Wexford, Michigan

*** Information herein deemed reliable but not guaranteed***

Building Type

X	Single Family
	Mobile Home
	Town Home
	Duplex
	A-Frame
X	Wood Frame

Building Style: PLAIN

Yr Built	Remodeled
0	0

Condition: Good

Room List

	Basement
	1st Floor
	2nd Floor
	Bedrooms

(1) Exterior

	Wood/Shingle
X	Aluminum/Vinyl
	Brick
X	Insulation

(2) Windows

X	Many Avg. Few	X	Large Avg. Small

	Wood Sash
	Metal Sash
X	Vinyl Sash
	Double Hung
	Horiz. Slide
	Casement
	Double Glass
	Patio Doors
X	Storms & Screens

(3) Roof

X	Gable		Gambrel
	Hip		Mansard
	Flat		Shed

X	Asphalt Shingle

Chimney:

(3) Roof (cont.)

	Eavestrough
X	Insulation
0	Front Overhang
0	Other Overhang

(4) Interior

X	Drywall		Plaster
	Paneled		Wood T&G

Trim & Decoration

	Ex	X	Ord		Min

Size of Closets

	Lg	X	Ord		Small

Doors:		Solid	X	H.C.	

(5) Floors

Kitchen:
Other: Linoleum
Other: Carpeted

(6) Ceilings

X	Drywall

(7) Excavation

Basement: 0 S.F.
Crawl: 645 S.F.
Slab: 0 S.F.
Height to Joists: 0.0

(8) Basement

	Conc. Block
	Poured Conc.
	Stone
	Treated Wood
	Concrete Floor

(9) Basement Finish

	Recreation SF
	Living SF
	Walkout Doors (B)
	No Floor SF
	Walkout Doors (A)

(10) Floor Support

Joists:
Unsupported Len:
Cntr.Sup:

(11) Heating/Cooling

X	Gas		Oil		Elec.
	Wood		Coal		Steam

	Forced Air w/o Ducts
X	Forced Air w/ Ducts
	Forced Hot Water
	Electric Baseboard
	Elec. Ceil. Radiant
	Radiant (in-floor)
	Electric Wall Heat
	Space Heater
	Wall/Floor Furnace
	Forced Heat & Cool
	Heat Pump
	No Heating/Cooling

	Central Air
	Wood Furnace

(12) Electric

150	Amps Service

No./Qual. of Fixtures

	Ex.	X	Ord.		Min

No. of Elec. Outlets

	Many	X	Ave.		Few

(13) Plumbing

	Average Fixture(s)
1	3 Fixture Bath
	2 Fixture Bath
	Softener, Auto
	Softener, Manual
	Solar Water Heat
	No Plumbing
	Extra Toilet
	Extra Sink
	Separate Shower
	Ceramic Tile Floor
	Ceramic Tile Wains
	Ceramic Tub Alcove
	Vent Fan

(14) Water/Sewer

	Public Water
	Public Sewer
1	Water Well
1	1000 Gal Septic
	2000 Gal Septic

Lump Sum Items:

(15) Built-ins

	Appliance Allow.
	Cook Top
	Dishwasher
	Garbage Disposal
	Bath Heater
	Vent Fan
	Hot Tub
	Unvented Hood
	Vented Hood
	Intercom
	Jacuzzi Tub
	Jacuzzi repl.Tub
	Oven
	Microwave
	Standard Range
	Self Clean Range
	Sauna
	Trash Compactor
	Central Vacuum
	Security System

(15) Fireplaces

	Interior 1 Story
	Interior 2 Story
	2nd/Same Stack
	Two Sided
	Exterior 1 Story
	Exterior 2 Story
	Prefab 1 Story
	Prefab 2 Story
	Heat Circulator
	Raised Hearth
	Wood Stove
	Direct-Vented Gas

Class: D
Effec. Age: 49
Floor Area: 645
Total Base New : 86,258 E.C.F.
Total Depr Cost: 43,992 X 1.297
Estimated T.C.V: 57,058

(16) Porches/Decks

Area	Type

(17) Garage

Year Built:
Car Capacity:
Class:
Exterior:
Brick Ven.:
Stone Ven.:
Common Wall:
Foundation:
Finished ?:
Auto. Doors:
Mech. Doors:
Area:
% Good:
Storage Area:
No Conc. Floor:

Bsmnt Garage:

Carport Area:
Roof:

Cost Est. for Res. Bldg: 1 Single Family PLAIN Cls D Blt 0
(11) Heating System: Forced Air w/ Ducts
Ground Area = 645 SF Floor Area = 645 SF.
Phy/Ab.Phy/Func/Econ/Comb. % Good=51/100/100/100/51
Building Areas

Stories	Exterior	Foundation	Size	Cost New	Depr. Cost
1 Story	Siding	Crawl Space	645		
			Total:	76,420	38,975

Other Additions/Adjustments

Water/Sewer			
1000 Gal Septic	1	4,293	2,189
Water Well, 100 Feet	1	5,545	2,828
	Totals:	86,258	43,992

Notes:

ECF (RESIDENTIAL) 1.297 => TCV: 57,058

*** Information herein deemed reliable but not guaranteed***

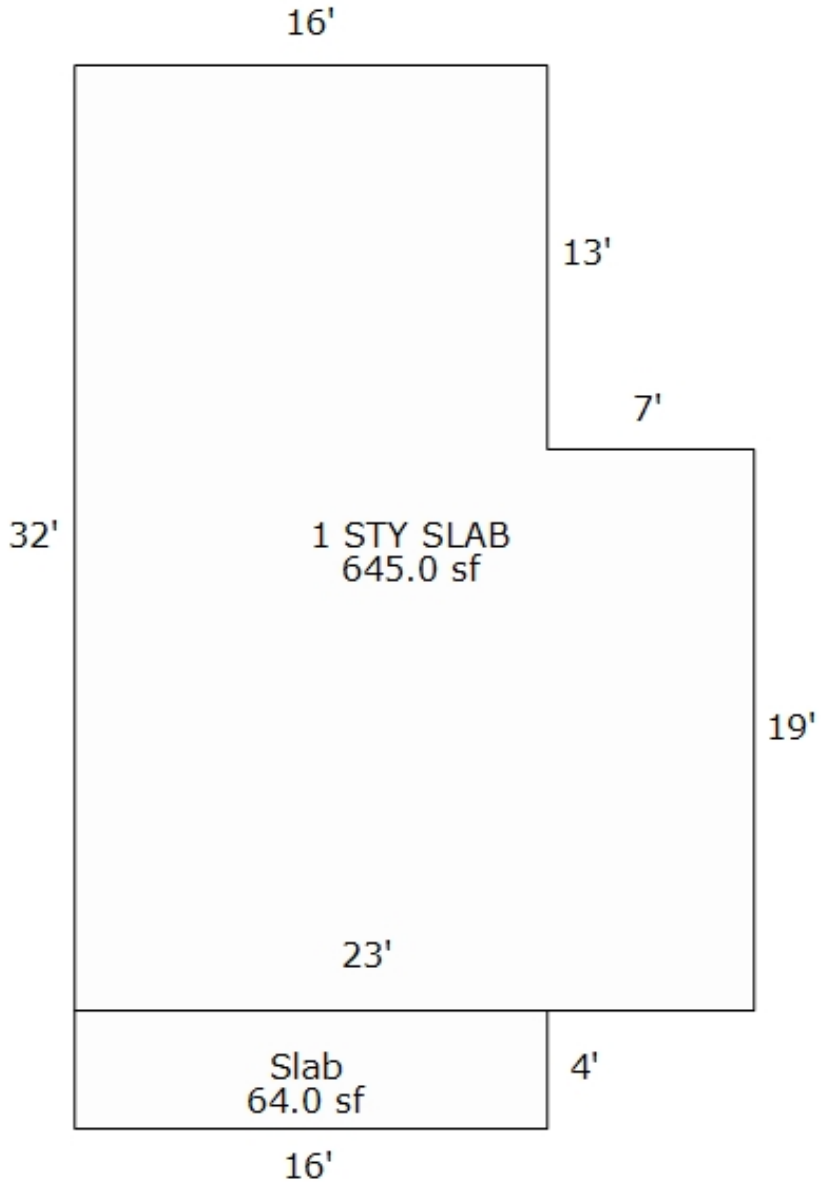

*** Information herein deemed reliable but not guaranteed***

Parcel Number: 2410-OH-11 Jurisdiction: GREENWOOD TWP County: WEXFORD Printed on 02/15/2024

Grantor	Grantee	Sale Price	Sale Date	Inst. Type	Terms of Sale	Liber & Page	Verified By	Prcnt. Trans.

Property Address	Class: RESIDENTIAL-VACANT	Zoning:	Building Permit(s)	Date	Number	Status
N 27 RD	School: MANTON CONSOLIDATED SCHOOLS					
	P.R.E. 0%					
Owner's Name/Address	:					
RAPP, TODD & CHRISTIANNE 82 JAMES ST BATTLE CREEK MI 49014	2024 Est TCV 35,183					

	Improved	X	Vacant

Land Value Estimates for Land Table 4010.LAND VALUES

Description	Frontage	Depth	* Factors * Front	Depth	Rate	%Adj.	Reason	Value
ORLAND HID	151.00	0.00	1.0000	1.0000	233	100		35,183
151 Actual Front Feet, 0.00 Total Acres							Total Est. Land Value =	35,183

	Public Improvements
	Dirt Road
X	Gravel Road
	Paved Road
	Storm Sewer
	Sidewalk
	Water
	Sewer
X	Electric
	Gas
	Curb
	Street Lights
	Standard Utilities
	Underground Utils.

	Topography of Site
	Level
X	Rolling
	Low
X	High
	Landscaped
	Swamp
X	Wooded
	Pond
	Waterfront
	Ravine
	Wetland
	Flood Plain
X	OPEN/PINES

Year	Land Value	Building Value	Assessed Value	Board of Review	Tribunal/ Other	Taxable Value
2024	17,600	0	17,600			3,487C
2023	10,600	0	10,600			3,321C
2022	9,100	0	9,100			3,163C
2021	7,600	0	7,600			3,062C

Tax Description

LOT 11 ORLANDO'S HIDEAWAY GW. SEC. 31 T24N R10W -MANTON-

Comments/Influences

Who	When	What
GLA	10/31/2022	INSPECTION
GLA	10/30/2023	INSPECTION

The Equalizer. Copyright (c) 1999 - 2009. Licensed To: Township of Greenwood, County of Wexford, Michigan

*** Information herein deemed reliable but not guaranteed***

Parcel Number: 2410-OH-12 Jurisdiction: GREENWOOD TWP County: WEXFORD Printed on 02/15/2024

Grantor	Grantee	Sale Price	Sale Date	Inst. Type	Terms of Sale	Liber & Page	Verified By	Prcnt. Trans.
SDLD INC	O'CONNOR, ROSS C	55,000	10/11/2002	WD	03-ARM'S LENGTH	445:381	DEED	0.0
BARZ, JAMES W.	SHELBY DESIGN LAND DEVELOI	35,000	05/11/1990	WD	03-ARM'S LENGTH	320:378	DEED	0.0

Property Address

6791 N 27 RD

Owner's Name/Address

O'CONNOR, ROSS C
6791 N 27 RD
MANTON MI 49663

Tax Description

LOT 12 ORLANDO'S HIDEAWAY INCLUDES ASSESSMENT FROM 31-1104 GW. SEC. 31 T24N R10W -MANTON-

Comments/Influences

Class: RESIDENTIAL-IMPROV Zoning:

School: MANTON CONSOLIDATED SCHOOLS

P.R.E. 100% / /

:

2024 Est TCV 158,134 TCV/TFA: 152.05

Building Permit(s)	Date	Number	Status

X Improved | Vacant

	Public Improvements
	Dirt Road
X	Gravel Road
	Paved Road
	Storm Sewer
	Sidewalk
	Water
	Sewer
X	Electric
	Gas
	Curb
	Street Lights
	Standard Utilities
	Underground Utils.

	Topography of Site
	Level
X	Rolling
	Low
	High
	Landscaped
	Swamp
	Wooded
	Pond
	Waterfront
	Ravine
	Wetland
	Flood Plain
X	OPEN/PINES

Who	When	What
GLA	05/13/2021	INSPECTION

Land Value Estimates for Land Table 4010.LAND VALUES

Description	Frontage	Depth	* Factors * Front	Depth	Rate	%Adj.	Reason	Value
ORLAND HID	100.00	0.00	1.0000	1.0000	233	100		23,300
ORLAND HID	50.00	0.00	1.0000	1.0000	233	50	LOW/SWAMPY	5,825
	82.00	0.00	1.0000	1.0000	0	100		0
232 Actual Front Feet, 0.00 Total Acres							Total Est. Land Value =	29,125

Land Improvement Cost Estimates

Description	Rate	Size	% Good	Cash Value
D/W/P: 3.5 Concrete	6.63	676	45	2,017
Total Estimated Land Improvements True Cash Value =				2,017

Year	Land Value	Building Value	Assessed Value	Board of Review	Tribunal/ Other	Taxable Value
2024	14,600	64,500	79,100			44,775C
2023	8,800	53,000	61,800			42,643C
2022	7,700	45,100	52,800			40,613C
2021	6,400	44,000	50,400			39,316C

The Equalizer. Copyright (c) 1999 - 2009. Licensed To: Township of Greenwood, County of Wexford, Michigan

*** Information herein deemed reliable but not guaranteed***

Building Type

X	Single Family
	Mobile Home
	Town Home
	Duplex
	A-Frame
X	Wood Frame

Building Style: PLAIN

Yr Built	Remodeled
0	0

Condition: Good

Room List

	Basement
	1st Floor
	2nd Floor
	Bedrooms

(1) Exterior

	Wood/Shingle
X	Aluminum/Vinyl
	Brick
X	Insulation

(2) Windows

	Many		Large
X	Avg.	X	Avg.
	Few		Small

	Wood Sash
	Metal Sash
X	Vinyl Sash
	Double Hung
	Horiz. Slide
	Casement
	Double Glass
	Patio Doors
X	Storms & Screens

(3) Roof

X	Gable		Gambrel
	Hip		Mansard
	Flat		Shed

X	Asphalt Shingle

Chimney:

(3) Roof (cont.)

	Eavestrough
X	Insulation
0	Front Overhang
0	Other Overhang

(4) Interior

X	Drywall		Plaster
	Paneled		Wood T&G

Trim & Decoration

	Ex	X	Ord		Min

Size of Closets

	Lg	X	Ord		Small

Doors:		Solid	X	H.C.	

(5) Floors

Kitchen:
Other: Linoleum
Other: Carpeted

(6) Ceilings

X	Drywall		

(7) Excavation

Basement: 1040 S.F.
Crawl: 0 S.F.
Slab: 0 S.F.
Height to Joists: 0.0

(8) Basement

	Conc. Block
	Poured Conc.
	Stone
	Treated Wood
	Concrete Floor

(9) Basement Finish

	Recreation SF
	Living SF
	Walkout Doors (B)
	No Floor SF
	Walkout Doors (A)

(10) Floor Support

Joists:
Unsupported Len:
Cntr.Sup:

(11) Heating/Cooling

X	Gas		Oil		Elec.
	Wood		Coal		Steam

	Forced Air w/o Ducts
X	Forced Air w/ Ducts
	Forced Hot Water
	Electric Baseboard
	Elec. Ceil. Radiant
	Radiant (in-floor)
	Electric Wall Heat
	Space Heater
	Wall/Floor Furnace
	Forced Heat & Cool
	Heat Pump
	No Heating/Cooling
	Central Air
	Wood Furnace

(12) Electric

150	Amps Service

No./Qual. of Fixtures

	Ex.	X	Ord.		Min

No. of Elec. Outlets

	Many	X	Ave.		Few

(13) Plumbing

	Average Fixture(s)
1	3 Fixture Bath
	2 Fixture Bath
	Softener, Auto
	Softener, Manual
	Solar Water Heat
	No Plumbing
	Extra Toilet
	Extra Sink
	Separate Shower
	Ceramic Tile Floor
	Ceramic Tile Wains
	Ceramic Tub Alcove
	Vent Fan

(14) Water/Sewer

	Public Water
	Public Sewer
1	Water Well
1	1000 Gal Septic
	2000 Gal Septic

Lump Sum Items:

(15) Built-ins

	Appliance Allow.
	Cook Top
	Dishwasher
	Garbage Disposal
	Bath Heater
	Vent Fan
	Hot Tub
	Unvented Hood
	Vented Hood
	Intercom
	Jacuzzi Tub
	Jacuzzi repl.Tub
	Oven
	Microwave
	Standard Range
	Self Clean Range
	Sauna
	Trash Compactor
	Central Vacuum
	Security System

(15) Fireplaces

	Interior 1 Story
	Interior 2 Story
	2nd/Same Stack
	Two Sided
	Exterior 1 Story
	Exterior 2 Story
	Prefab 1 Story
	Prefab 2 Story
	Heat Circulator
	Raised Hearth
	Wood Stove
	Direct-Vented Gas

Class: CD
Effec. Age: 49
Floor Area: 1,040
Total Base New : 191,987 E.C.F.
Total Depr Cost: 97,912 X 1.297
Estimated T.C.V: 126,992

(16) Porches/Decks

Area	Type
144	WSEP (1 Story)
238	WCP (1 Story)
128	Treated Wood
60	Treated Wood

(17) Garage

Year Built:
Car Capacity:
Class: CD
Exterior: Siding
Brick Ven.: 0
Stone Ven.: 0
Common Wall: 1 Wall
Foundation: 42 Inch
Finished ?:
Auto. Doors: 0
Mech. Doors: 0
Area: 624
% Good: 0
Storage Area: 0
No Conc. Floor: 0

Bsmnt Garage:

Carport Area:
Roof:

Cost Est. for Res. Bldg: 1 Single Family PLAIN Cls CD Blt 0
(11) Heating System: Forced Air w/ Ducts
Ground Area = 1040 SF Floor Area = 1040 SF.
Phy/Ab.Phy/Func/Econ/Comb. % Good=51/100/100/100/51
Building Areas

Stories	Exterior	Foundation	Size	Cost New	Depr. Cost
1 Story	Siding	Basement	1,040		
			Total:	140,490	71,649
Other Additions/Adjustments					
Water/Sewer					
1000 Gal Septic			1	4,582	2,337
Water Well, 100 Feet			1	5,680	2,897
Porches					
WSEP (1 Story)			144	7,124	3,633
WCP (1 Story)			238	8,021	4,091
Deck					
Treated Wood			128	3,043	1,552
Treated Wood			60	1,926	982
Garages					
Class: CD Exterior: Siding Foundation: 42 Inch (Unfinished)					
Base Cost			624	23,650	12,061
Common Wall: 1 Wall			1	-2,529	-1,290
			Totals:	191,987	97,912

Notes:

ECF (RESIDENTIAL) 1.297 => TCV: 126,992

*** Information herein deemed reliable but not guaranteed***

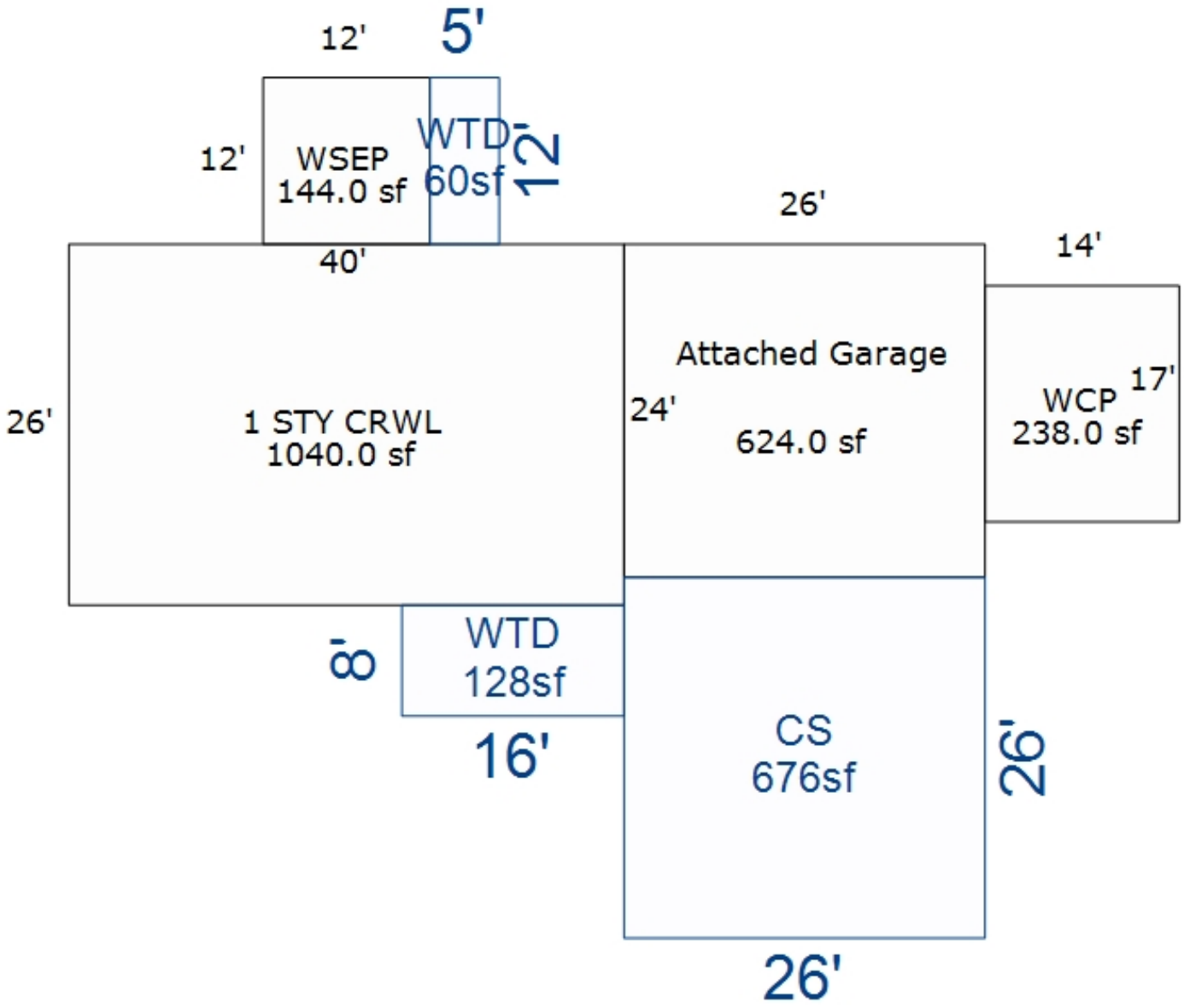

*** Information herein deemed reliable but not guaranteed***

Parcel Number: 2410-OH-13 Jurisdiction: GREENWOOD TWP County: WEXFORD Printed on 02/15/2024

Grantor	Grantee	Sale Price	Sale Date	Inst. Type	Terms of Sale	Liber & Page	Verified By	Prcnt. Trans.
MASON, ROBERT M	LAMBERT VALERIE	0	05/15/2023	QC	21-NOT USED/OTHER	696/1193	DEED	100.0
MASON, ROBERT M		0	09/23/2021	WD	16-LC PAYOFF	691/570	DEED	0.0
BARTHOLOMEW, PAUL	MASON, ROBERT & VALERIE LA	7,000	08/04/2000	LC	03-ARM'S LENGTH	375:328	DEED	0.0
MATSON, ROBERT 10%	BARTHOLEMEW, PAUL	6,000	03/07/1986	LC	03-ARM'S LENGTH	300:892	DEED	0.0

Property Address

6811 N 27 RD

Owner's Name/Address

LAMBERT VALERIE
6821 N 27 RD
MANTON MI 49663

Tax Description

LOT 13 ORLANDO'S HIDEAWAY GW. SEC. 31 T24N R10W -MANTON-

Comments/Influences

Class: RESIDENTIAL-VACANT Zoning:

School: MANTON CONSOLIDATED SCHOOLS

P.R.E. 0%

:

2024 Est TCV 26,795

Building Permit(s)	Date	Number	Status

	Improved	X	Vacant

	Public Improvements
	Dirt Road
X	Gravel Road
	Paved Road
	Storm Sewer
	Sidewalk
	Water
	Sewer
X	Electric
	Gas
	Curb
	Street Lights
	Standard Utilities
	Underground Utils.

	Topography of Site
X	Level
	Rolling
	Low
	High
	Landscaped
	Swamp
	Wooded
	Pond
	Waterfront
	Ravine
	Wetland
	Flood Plain
X	OPEN/PINES

Who	When	What
GLA	10/31/2022	INSPECTION

Land Value Estimates for Land Table 4010.LAND VALUES

Description	Frontage	Depth	* Factors * Front	Depth	Rate	%Adj.	Reason	Value
ORLAND HID	115.00	0.00	1.0000	1.0000	233	100		26,795
	149.00	0.00	1.0000	1.0000	0	100		0
264 Actual Front Feet, 0.00 Total Acres							Total Est. Land Value =	26,795

Year	Land Value	Building Value	Assessed Value	Board of Review	Tribunal/ Other	Taxable Value
2024	13,400	0	13,400			13,400S
2023	8,100	0	8,100			3,321C
2022	7,200	0	7,200			3,163C
2021	6,000	0	6,000			3,062C

The Equalizer. Copyright (c) 1999 - 2009. Licensed To: Township of Greenwood, County of Wexford, Michigan

*** Information herein deemed reliable but not guaranteed***

Parcel Number: 2410-OH-14 Jurisdiction: GREENWOOD TWP County: WEXFORD Printed on 02/15/2024

Grantor	Grantee	Sale Price	Sale Date	Inst. Type	Terms of Sale	Liber & Page	Verified By	Prcnt. Trans.
AYRES, ROBERT K.	LAMBERT, VALERIE J.	34,000	09/28/1994	WD	03-ARM'S LENGTH	341:384	DEED	0.0

Property Address

6821 N 27 RD

Owner's Name/Address

LAMBERT, VALERIE JEAN
6821 N 27 RD
MANTON MI 49663

Tax Description

LOT 14 ORLANDO'S HIDEAWAY GW. SEC. 31 T24N R10W -MANTON-

Comments/Influences

The Equalizer. Copyright (c) 1999 - 2009. Licensed To: Township of Greenwood, County of Wexford, Michigan

Class: RESIDENTIAL-IMPROV Zoning:

School: MANTON CONSOLIDATED SCHOOLS

P.R.E. 100% / /

:

2024 Est TCV 118,990 TCV/TFA: 145.11

Building Permit(s)	Date	Number	Status

X Improved | Vacant

Public Improvements

	Dirt Road
X	Gravel Road
	Paved Road
	Storm Sewer
	Sidewalk
	Water
	Sewer
X	Electric
	Gas
	Curb
	Street Lights
	Standard Utilities
	Underground Utils.

Topography of Site

X	Level
	Rolling
	Low
	High
	Landscaped
	Swamp
X	Wooded
	Pond
	Waterfront
	Ravine
	Wetland
	Flood Plain
X	OPEN/PINES

Who	When	What
GLA	10/31/2022	INSPECTION

Land Value Estimates for Land Table 4010.LAND VALUES

Description	Frontage	Depth	* Factors * Front	Depth	Rate	%Adj.	Reason	Value
ORLAND HID	115.00	0.00	1.0000	1.0000	233	100		26,795
	115.00	0.00	1.0000	1.0000	0	100		0

230 Actual Front Feet, 0.00 Total Acres Total Est. Land Value = 26,795

Land Improvement Cost Estimates

Description	Rate	Size	% Good	Cash Value
D/W/P: 4in Concrete	6.11	108	45	297
Wood Frame	18.03	760	51	6,989
Total Estimated Land Improvements True Cash Value =				7,286

Year	Land Value	Building Value	Assessed Value	Board of Review	Tribunal/ Other	Taxable Value
2024	13,400	46,100	59,500			24,888C
2023	8,100	38,300	46,400			23,703C
2022	7,100	32,800	39,900			22,575C
2021	6,000	29,300	35,300			21,177C

*** Information herein deemed reliable but not guaranteed***

Building Type

X	Single Family
	Mobile Home
	Town Home
	Duplex
	A-Frame
X	Wood Frame

Building Style: PLAIN

Yr Built	Remodeled
0	0

Condition: Good

Room List

	Basement
	1st Floor
	2nd Floor
	Bedrooms

(1) Exterior

X	Wood/Shingle
	Aluminum/Vinyl
	Brick
X	Insulation

(2) Windows

	Many		Large
X	Avg.	X	Avg.
	Few		Small

X	Wood Sash
	Metal Sash
	Vinyl Sash
	Double Hung
	Horiz. Slide
	Casement
	Double Glass
	Patio Doors
X	Storms & Screens

(3) Roof

X	Gable		Gambrel
	Hip		Mansard
	Flat		Shed

X	Asphalt Shingle

Chimney:

(3) Roof (cont.)

	Eavestrough
X	Insulation
0	Front Overhang
0	Other Overhang

(4) Interior

X	Drywall		Plaster
	Paneled		Wood T&G

Trim & Decoration

	Ex	X	Ord		Min

Size of Closets

	Lg	X	Ord		Small

Doors:		Solid	X	H.C.	

(5) Floors

Kitchen:
Other: Linoleum
Other: Carpeted

(6) Ceilings

X	Drywall

(7) Excavation

Basement: 0 S.F.
Crawl: 820 S.F.
Slab: 0 S.F.
Height to Joists: 0.0

(8) Basement

	Conc. Block
	Poured Conc.
	Stone
	Treated Wood
	Concrete Floor

(9) Basement Finish

	Recreation SF
	Living SF
	Walkout Doors (B)
	No Floor SF
	Walkout Doors (A)

(10) Floor Support

Joists:
Unsupported Len:
Cntr.Sup:

(11) Heating/Cooling

X	Gas		Oil		Elec.
	Wood		Coal		Steam

	Forced Air w/o Ducts
X	Forced Air w/ Ducts
	Forced Hot Water
	Electric Baseboard
	Elec. Ceil. Radiant
	Radiant (in-floor)
	Electric Wall Heat
	Space Heater
	Wall/Floor Furnace
	Forced Heat & Cool
	Heat Pump
	No Heating/Cooling

	Central Air
	Wood Furnace

(12) Electric

150	Amps Service

No./Qual. of Fixtures

	Ex.	X	Ord.		Min

No. of Elec. Outlets

	Many	X	Ave.		Few

(13) Plumbing

	Average Fixture(s)
1	3 Fixture Bath
	2 Fixture Bath
	Softener, Auto
	Softener, Manual
	Solar Water Heat
	No Plumbing
	Extra Toilet
	Extra Sink
	Separate Shower
	Ceramic Tile Floor
	Ceramic Tile Wains
	Ceramic Tub Alcove
	Vent Fan

(14) Water/Sewer

	Public Water
	Public Sewer
1	Water Well
1	1000 Gal Septic
	2000 Gal Septic

Lump Sum Items:

(15) Built-ins

	Appliance Allow.
	Cook Top
	Dishwasher
	Garbage Disposal
	Bath Heater
	Vent Fan
	Hot Tub
	Unvented Hood
	Vented Hood
	Intercom
	Jacuzzi Tub
	Jacuzzi repl.Tub
	Oven
	Microwave
	Standard Range
	Self Clean Range
	Sauna
	Trash Compactor
	Central Vacuum
	Security System

(15) Fireplaces

	Interior 1 Story
	Interior 2 Story
	2nd/Same Stack
	Two Sided
1	Exterior 1 Story
	Exterior 2 Story
	Prefab 1 Story
	Prefab 2 Story
	Heat Circulator
	Raised Hearth
	Wood Stove
	Direct-Vented Gas

Class: D
Effec. Age: 49
Floor Area: 820
Total Base New : 128,365 E.C.F.
Total Depr Cost: 65,466 X 1.297
Estimated T.C.V: 84,909

(16) Porches/Decks

Area	Type
48	WCP (1 Story)
117	Treated Wood

(17) Garage

Year Built:
Car Capacity:
Class: D
Exterior: Siding
Brick Ven.: 0
Stone Ven.: 0
Common Wall: Detache
Foundation: 18 Inch
Finished ?:
Auto. Doors: 0
Mech. Doors: 0
Area: 240
% Good: 0
Storage Area: 0
No Conc. Floor: 0

Bsmnt Garage:

Carport Area:
Roof:

Cost Est. for Res. Bldg: 1 Single Family PLAIN Cls D Blt 0
(11) Heating System: Forced Air w/ Ducts
Ground Area = 820 SF Floor Area = 820 SF.
Phy/Ab.Phy/Func/Econ/Comb. % Good=51/100/100/100/51
Building Areas

Stories	Exterior	Foundation	Size	Cost New	Depr. Cost
1+ Story	Siding	Crawl Space	820		
			Total:	97,415	49,682
Other Additions/Adjustments					
Water/Sewer					
1000 Gal Septic			1	4,293	2,189
Water Well, 100 Feet			1	5,545	2,828
Porches					
WCP (1 Story)			48	2,486	1,268
Deck					
Treated Wood			117	2,779	1,417
Garages					
Class: D Exterior: Siding Foundation: 18 Inch (Unfinished)					
Base Cost			240	9,818	5,007
Fireplaces					
Exterior 1 Story			1	5,004	2,552
Local Cost Items					
WOOD LEAN TO			168	1,025	523
			Totals:	128,365	65,466

Notes:

ECF (RESIDENTIAL) 1.297 => TCV: 84,909

*** Information herein deemed reliable but not guaranteed***

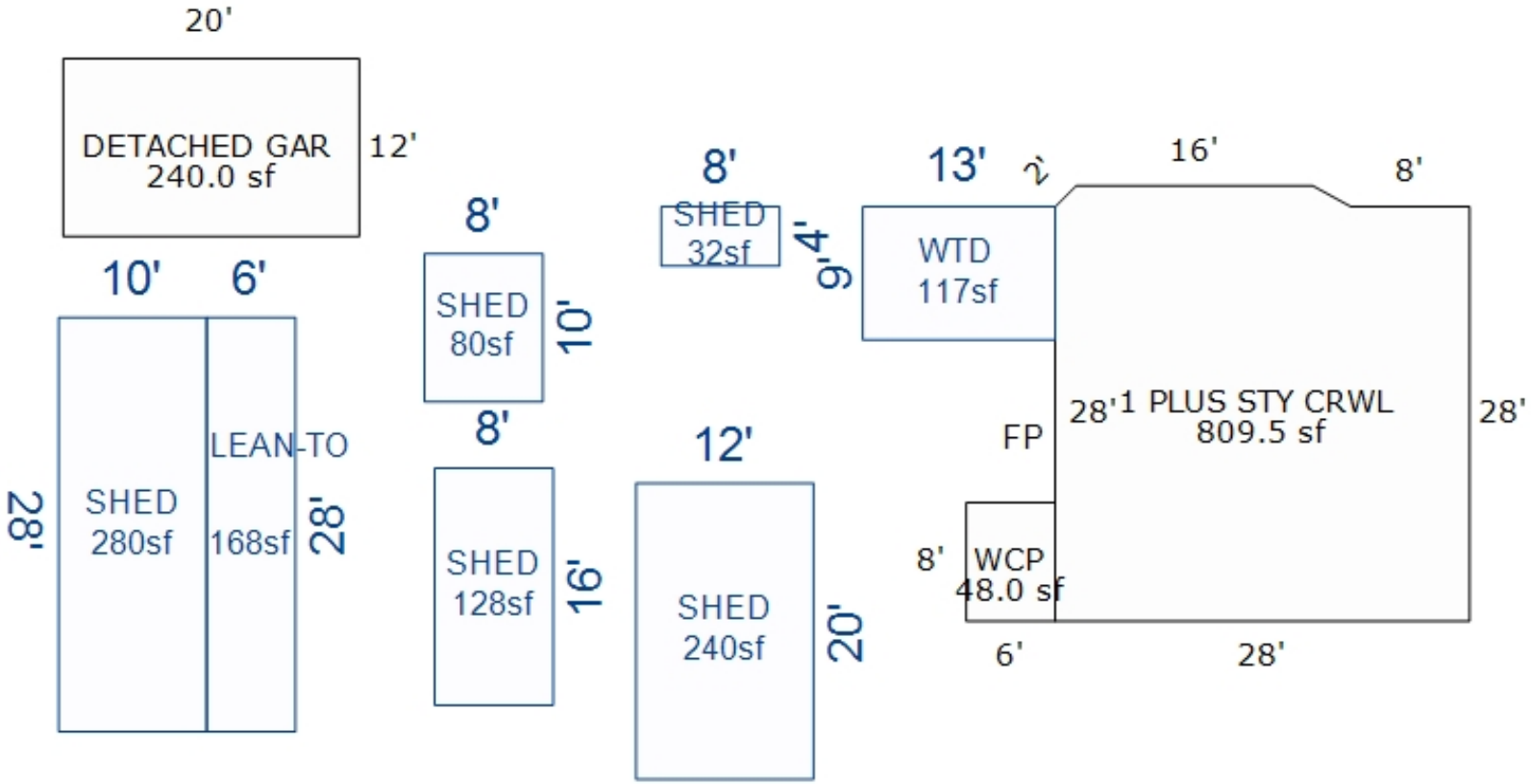

*** Information herein deemed reliable but not guaranteed***

Parcel Number: 2410-OH-15 Jurisdiction: GREENWOOD TWP County: WEXFORD Printed on 02/15/2024

Grantor	Grantee	Sale Price	Sale Date	Inst. Type	Terms of Sale	Liber & Page	Verified By	Prcnt. Trans.
STROBRIDGE, ROGER	STROBRIDGE, ROGER P TRUST	0	12/17/2021	QC	14-INTO/OUT OF TRUST	691/2536	DEED	0.0
STROBRIDGE, SUZANNE	STROBRIDGE, ROGER	0	04/28/2011	QC	06-COURT JUDGEMENT	639/644	DEED	0.0

Property Address

6841 N 27 RD

Owner's Name/Address

STROBRIDGE, ROGER P TRUST
6841 N 27 RD
MANTON MI 49663

Tax Description

LOT 15 ORLANDO'S HIDEAWAY GW. SEC. 31 T24N R10W -MANTON-

Comments/Influences

Class: RESIDENTIAL-IMPROV Zoning:

School: MANTON CONSOLIDATED SCHOOLS

P.R.E. 0%

:

2024 Est TCV 128,025 TCV/TFA: 148.18

Building Permit(s)	Date	Number	Status

X Improved | Vacant

	Public Improvements
	Dirt Road
X	Gravel Road
	Paved Road
	Storm Sewer
	Sidewalk
	Water
	Sewer
X	Electric
	Gas
	Curb
	Street Lights
	Standard Utilities
	Underground Utils.

	Topography of Site
X	Level
X	Rolling
X	Low
	High
	Landscaped
	Swamp
X	Wooded
	Pond
	Waterfront
	Ravine
	Wetland
	Flood Plain
X	OPEN/PINES

Who	When	What
GLA	05/13/2021	INSPECTION

Land Value Estimates for Land Table 4010.LAND VALUES

Description	Frontage	Depth	* Factors * Front	Depth	Rate	%Adj.	Reason	Value
ORLAND HID	200.00	0.00	1.0000	1.0000	233	100		46,600
200 Actual Front Feet, 0.00 Total Acres							Total Est. Land Value =	46,600

Land Improvement Cost Estimates

Description	Rate	Size	% Good	Cash Value
Wood Frame	19.12	268	51	2,613
Total Estimated Land Improvements True Cash Value =				2,613

Year	Land Value	Building Value	Assessed Value	Board of Review	Tribunal/ Other	Taxable Value
2024	23,300	40,700	64,000			20,685C
2023	14,000	33,700	47,700			19,700C
2022	12,000	28,900	40,900			18,762C
2021	10,000	26,200	36,200			18,163C

The Equalizer. Copyright (c) 1999 - 2009. Licensed To: Township of Greenwood, County of Wexford, Michigan

*** Information herein deemed reliable but not guaranteed***

Building Type

X	Single Family
	Mobile Home
	Town Home
	Duplex
	A-Frame
X	Wood Frame

Building Style: PLAIN

Yr Built	Remodeled
0	0

Condition: Good

Room List

	Basement
	1st Floor
	2nd Floor
	Bedrooms

(1) Exterior

	Wood/Shingle
X	Aluminum/Vinyl
	Brick
X	Insulation

(2) Windows

	Many		Large
X	Avg.	X	Avg.
	Few		Small

	Wood Sash
	Metal Sash
X	Vinyl Sash
	Double Hung
	Horiz. Slide
	Casement
	Double Glass
	Patio Doors
X	Storms & Screens

(3) Roof

X	Gable		Gambrel
	Hip		Mansard
	Flat		Shed

X	Asphalt Shingle

Chimney:

(3) Roof (cont.)

	Eavestrough
X	Insulation
0	Front Overhang
0	Other Overhang

(4) Interior

X	Drywall		Plaster
	Paneled		Wood T&G

Trim & Decoration

	Ex	X	Ord		Min

Size of Closets

	Lg	X	Ord		Small

Doors:		Solid	X	H.C.	

(5) Floors

Kitchen:
Other: Linoleum
Other: Carpeted

(6) Ceilings

X	Drywall

(7) Excavation

Basement: 0 S.F.
Crawl: 0 S.F.
Slab: 864 S.F.
Height to Joists: 0.0

(8) Basement

	Conc. Block
	Poured Conc.
	Stone
	Treated Wood
	Concrete Floor

(9) Basement Finish

	Recreation SF
	Living SF
	Walkout Doors (B)
	No Floor SF
	Walkout Doors (A)

(10) Floor Support

Joists:
Unsupported Len:
Cntr.Sup:

(11) Heating/Cooling

X	Gas		Oil		Elec.
	Wood		Coal		Steam

	Forced Air w/o Ducts
X	Forced Air w/ Ducts
	Forced Hot Water
	Electric Baseboard
	Elec. Ceil. Radiant
	Radiant (in-floor)
	Electric Wall Heat
	Space Heater
	Wall/Floor Furnace
	Forced Heat & Cool
	Heat Pump
	No Heating/Cooling

	Central Air
	Wood Furnace

(12) Electric

150	Amps Service

No./Qual. of Fixtures

	Ex.	X	Ord.		Min

No. of Elec. Outlets

	Many	X	Ave.		Few

(13) Plumbing

	Average Fixture(s)
1	3 Fixture Bath
	2 Fixture Bath
	Softener, Auto
	Softener, Manual
	Solar Water Heat
	No Plumbing
	Extra Toilet
	Extra Sink
	Separate Shower
	Ceramic Tile Floor
	Ceramic Tile Wains
	Ceramic Tub Alcove
	Vent Fan

(14) Water/Sewer

	Public Water
	Public Sewer
1	Water Well
1	1000 Gal Septic
	2000 Gal Septic

Lump Sum Items:

(15) Built-ins

	Appliance Allow.
	Cook Top
	Dishwasher
	Garbage Disposal
	Bath Heater
	Vent Fan
	Hot Tub
	Unvented Hood
	Vented Hood
	Intercom
	Jacuzzi Tub
	Jacuzzi repl.Tub
	Oven
	Microwave
	Standard Range
	Self Clean Range
	Sauna
	Trash Compactor
	Central Vacuum
	Security System

(15) Fireplaces

	Interior 1 Story
	Interior 2 Story
	2nd/Same Stack
	Two Sided
	Exterior 1 Story
	Exterior 2 Story
	Prefab 1 Story
	Prefab 2 Story
	Heat Circulator
	Raised Hearth
	Wood Stove
	Direct-Vented Gas

Class: D
Effec. Age: 49
Floor Area: 864
Total Base New : 119,148 E.C.F.
Total Depr Cost: 60,765 X 1.297
Estimated T.C.V: 78,812

(16) Porches/Decks

Area	Type
120	Treated Wood

(17) Garage

Year Built:
Car Capacity:
Class:
Exterior:
Brick Ven.:
Stone Ven.:
Common Wall:
Foundation:
Finished ?:
Auto. Doors:
Mech. Doors:
Area:
% Good:
Storage Area:
No Conc. Floor:

Bsmnt Garage:

Carport Area: 360
Roof: Aluminum

Cost Est. for Res. Bldg: 1 Single Family PLAIN Cls D Blt 0
(11) Heating System: Forced Air w/ Ducts
Ground Area = 864 SF Floor Area = 864 SF.
Phy/Ab.Phy/Func/Econ/Comb. % Good=51/100/100/100/51
Building Areas

Stories	Exterior	Foundation	Size	Cost New	Depr. Cost
1 Story	Siding	Slab	864		
			Total:	94,389	48,139
Other Additions/Adjustments					
Water/Sewer					
1000 Gal Septic			1	4,293	2,189
Water Well, 100 Feet			1	5,545	2,828
Deck					
Treated Wood			120	2,836	1,446
Carports					
Aluminum			360	4,504	2,297
Local Cost Items					
SHED			448	3,494	1,782
SHED #2			524	4,087	2,084
			Totals:	119,148	60,765

Notes:
ECF (RESIDENTIAL) 1.297 => TCV: 78,812

*** Information herein deemed reliable but not guaranteed***

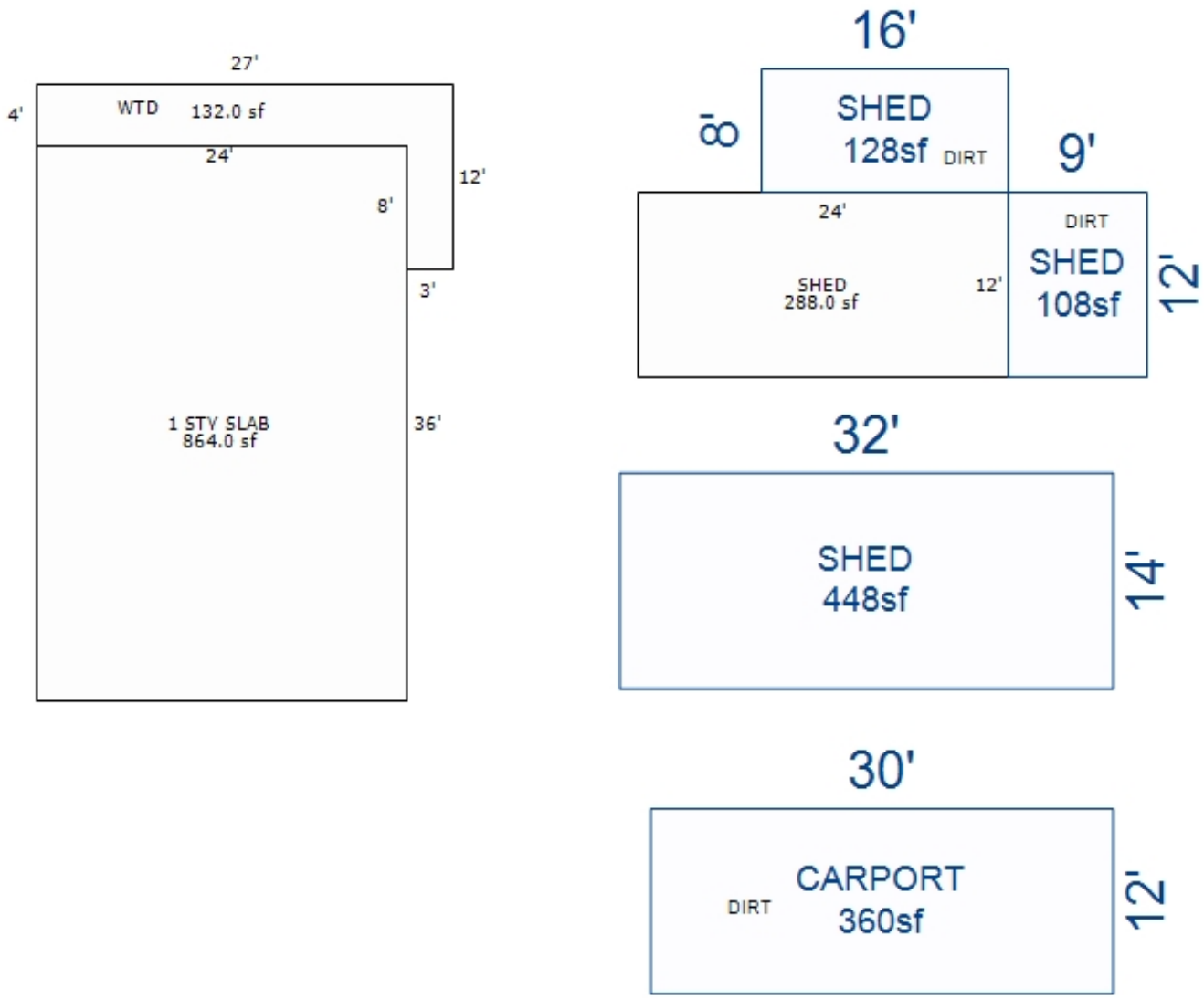

*** Information herein deemed reliable but not guaranteed***

Parcel Number: 2410-OH-18 Jurisdiction: GREENWOOD TWP County: WEXFORD Printed on 02/15/2024

Grantor	Grantee	Sale Price	Sale Date	Inst. Type	Terms of Sale	Liber & Page	Verified By	Prcnt. Trans.
GRIFFIS, BRAD D & JENNIFER	GRIFFIS, BRAD D & JENNIFEF	100	11/18/2020	QC	14-INTO/OUT OF TRUST	688/1988	AGENT	0.0
GRIFFIS, BRAD D & JENNIFER	GRIFFIS, BRAD D & JENNIFEF	100	11/18/2020	QC	14-INTO/OUT OF TRUST	688/1988	AGENT	0.0
STUARD, WILLIAM C JR	GRIFFIS, BRAD D & JENNIFEF	158,000	12/01/2016	WD	03-ARM'S LENGTH	678/2964	DEED	100.0
WITTENGEN, THOMAS J	STUARD, WILLIAM C JR	21,000	10/05/2006	WD	03-ARM'S LENGTH	593:1228	DEED	0.0

Property Address

6861 N 27 RD

Owner's Name/Address

GRIFFIS, BRAD D & JENNIFER L TRUST
12725 LEISURE LANE
HORTON MI 49246

Tax Description

LOTS 16 & 17 & S 1/2 OF LOT 18 ORLANDO'S HIDEAWAY GW. SEC. 31 T24N R10W -MANTON- ASSESSED W/ OH-16, 17 '07

Comments/Influences

Class: RESIDENTIAL-IMPROV Zoning:

School: MANTON CONSOLIDATED SCHOOLS

P.R.E. 0%

:

2024 Est TCV 239,206 TCV/TFA: 276.86

Building Permit(s)	Date	Number	Status

X Improved | Vacant

Public Improvements

	Dirt Road
X	Gravel Road
	Paved Road
	Storm Sewer
	Sidewalk
	Water
	Sewer
X	Electric
	Gas
	Curb
	Street Lights
	Standard Utilities
	Underground Utils.

Topography of Site

	Level
X	Rolling
X	Low
X	High
	Landscaped
	Swamp
X	Wooded
	Pond
	Waterfront
	Ravine
	Wetland
	Flood Plain
X	OPEN/PINES

Who	When	What
GLA	05/13/2021	INSPECTION
LM	09/25/2009	DATA ENTER
LM	08/26/2009	INSPECTED

Land Value Estimates for Land Table 4010.LAND VALUES

Description	Frontage	Depth	* Factors * Front	Depth	Rate	%Adj.	Reason	Value
ORLAND HID	251.00	0.00	1.0000	1.0000	233	100		58,483
	251.00	0.00	1.0000	1.0000	0	100		0
502 Actual Front Feet, 0.00 Total Acres							Total Est. Land Value =	58,483

Year	Land Value	Building Value	Assessed Value	Board of Review	Tribunal/ Other	Taxable Value
2024	29,200	90,400	119,600			73,938C
2023	17,600	73,600	91,200			70,418C
2022	15,600	62,000	77,600			67,065C
2021	12,900	62,700	75,600			64,923C

The Equalizer. Copyright (c) 1999 - 2009.
Licensed To: Township of Greenwood, County of Wexford, Michigan

*** Information herein deemed reliable but not guaranteed***

Pages 3 to 4. Other Personal Property	Claimed Value	Depr	Depr.Value
Section G. Other Assessable Personal Property	0	100	0
Section H. Assessable Tools	0	100	0
Section I. Qualified Personal Property	0	100	0
Section M. Leasehold Improvements	0	TBL	0
Section N. Buildings on Leased Land	180,723	TBL	180,723
Section O. Rental Information	0	100	0
13. Idle Equipment	0	TBL	0
14. Construction in Progress	0	50	0
15 & 16. Cable, Utility & Cellular Assets	0	TBL	0

Total Cost New= 180,723 TCV= 180,723 Assessed Value= 90,400

*** Information herein deemed reliable but not guaranteed***

Building Type

X	Single Family
	Mobile Home
	Town Home
	Duplex
	A-Frame
X	Wood Frame

Building Style: CABIN

Yr Built	Remodeled
2007	0

Condition: Good

Room List

	Basement
	1st Floor
	2nd Floor
	Bedrooms

(1) Exterior

X	Wood/Shingle
	Aluminum/Vinyl
	Brick
	Insulation

(2) Windows

X	Many		Large
	Avg.	X	Avg.
	Few		Small

	Wood Sash
	Metal Sash
	Vinyl Sash
	Double Hung
	Horiz. Slide
	Casement
	Double Glass
	Patio Doors
	Storms & Screens

(3) Roof

X	Gable		Gambrel
	Hip		Mansard
	Flat		Shed

X	Asphalt Shingle

Chimney: Brick

(3) Roof (cont.)

	Eavestrough
	Insulation
0	Front Overhang
0	Other Overhang

(4) Interior

	Drywall		Plaster
	Paneled		Wood T&G

Trim & Decoration

	Ex	X	Ord		Min

Size of Closets

	Lg	X	Ord		Small

Doors:		Solid	X	H.C.	

(5) Floors

Kitchen:
Other:
Other:

(6) Ceilings

(7) Excavation

Basement: 0 S.F.
Crawl: 864 S.F.
Slab: 0 S.F.
Height to Joists: 0.0

(8) Basement

	Conc. Block
	Poured Conc.
	Stone
	Treated Wood
	Concrete Floor

(9) Basement Finish

	Recreation SF
	Living SF
	Walkout Doors (B)
	No Floor SF
	Walkout Doors (A)

(10) Floor Support

Joists:
Unsupported Len:
Cntr.Sup:

(11) Heating/Cooling

X	Gas		Oil		Elec.
	Wood		Coal		Steam

	Forced Air w/o Ducts
	Forced Air w/ Ducts
	Forced Hot Water
	Electric Baseboard
	Elec. Ceil. Radiant
	Radiant (in-floor)
	Electric Wall Heat
	Space Heater
	Wall/Floor Furnace
X	Forced Heat & Cool
	Heat Pump
	No Heating/Cooling

	Central Air
	Wood Furnace

(12) Electric

0	Amps Service

No./Qual. of Fixtures

	Ex.	X	Ord.		Min

No. of Elec. Outlets

	Many	X	Ave.		Few

(13) Plumbing

1	Average Fixture(s)
	3 Fixture Bath
	2 Fixture Bath
	Softener, Auto
	Softener, Manual
	Solar Water Heat
	No Plumbing
	Extra Toilet
	Extra Sink
	Separate Shower
	Ceramic Tile Floor
	Ceramic Tile Wains
	Ceramic Tub Alcove
	Vent Fan

(14) Water/Sewer

	Public Water
	Public Sewer
	Water Well
	1000 Gal Septic
	2000 Gal Septic

Lump Sum Items:

(15) Built-ins

	Appliance Allow.
	Cook Top
	Dishwasher
	Garbage Disposal
	Bath Heater
	Vent Fan
	Hot Tub
	Unvented Hood
	Vented Hood
	Intercom
	Jacuzzi Tub
	Jacuzzi repl.Tub
	Oven
	Microwave
	Standard Range
	Self Clean Range
	Sauna
	Trash Compactor
	Central Vacuum
	Security System

(15) Fireplaces

	Interior 1 Story
	Interior 2 Story
	2nd/Same Stack
	Two Sided
1	Exterior 1 Story
	Exterior 2 Story
	Prefab 1 Story
	Prefab 2 Story
	Heat Circulator
	Raised Hearth
	Wood Stove
1	Direct-Vented Gas

Class: C
Effec. Age: 17
Floor Area: 864
Total Base New : 167,876 E.C.F.
Total Depr Cost: 139,339 X 1.297
Estimated T.C.V: 180,723

(16) Porches/Decks

Area	Type
544	WCP (1 Story)

(17) Garage

Year Built:
Car Capacity:
Class: C
Exterior: Pole
Brick Ven.: 0
Stone Ven.: 0
Common Wall: Detache
Foundation: 18 Inch
Finished ?:
Auto. Doors: 0
Mech. Doors: 0
Area: 416
% Good: 0
Storage Area: 0
No Conc. Floor: 0

Bsmnt Garage:

Carport Area:
Roof:

Cost Est. for Res. Bldg: 1 Single Family CABIN Cls C Blt 2007
(11) Heating System: Forced Heat & Cool
Ground Area = 864 SF Floor Area = 864 SF.
Phy/Ab.Phy/Func/Econ/Comb. % Good=83/100/100/100/83
Building Areas

Stories	Exterior	Foundation	Size	Cost New	Depr. Cost
1+ Story	Siding	Crawl Space	864		
			Total:	127,000	105,411
Other Additions/Adjustments					
Porches					
WCP (1 Story)			544	17,854	14,819
Garages					
Class: C Exterior: Pole (Unfinished)					
Base Cost			416	13,420	11,139
Fireplaces					
Exterior 1 Story			1	6,559	5,444
Direct-Vented Gas			1	3,043	2,526
			Totals:	167,876	139,339

Notes:
ECF (RESIDENTIAL) 1.297 => TCV: 180,723

*** Information herein deemed reliable but not guaranteed***

FENCE IS A SPLIT RAIL - 3 RAILS

Sketch by Apex Medina™

*** Information herein deemed reliable but not guaranteed***

Parcel Number: 2410-OH-19 Jurisdiction: GREENWOOD TWP County: WEXFORD Printed on 02/15/2024

Grantor	Grantee	Sale Price	Sale Date	Inst. Type	Terms of Sale	Liber & Page	Verified By	Prcnt. Trans.
GALVIN, LAWRENCE & MARY	COLE, PHILLIP & JUDITH	70,000	08/04/2004	WD	03-ARM'S LENGTH	559:1907	DEED	0.0
VOLAKAKIS ET AL, NICHOLAS	GALVIN, LAWRENCE A.	1,250	07/02/1990	WD	03-ARM'S LENGTH	323:406	DEED	0.0

Property Address
6891 N 27 RD

Owner's Name/Address
COLE, PHILLIP K
& JUDITH L
P O BOX 905
PERRY MI 48872

Tax Description
LOT 19 & N 1/2 OF LOT 18 ORLANDO'S HIDEAWAY GW. SEC. 31 T24N R10W -MANTON-

Comments/Influences

Class: RESIDENTIAL-IMPROV Zoning:
School: MANTON CONSOLIDATED SCHOOLS
P.R.E. 0%
:
2024 Est TCV 162,877 TCV/TFA: 161.58

Building Permit(s)	Date	Number	Status
Mechanical	10/19/2010	PM10-11164	

X Improved | Vacant

Public Improvements

	Dirt Road
X	Gravel Road
	Paved Road
	Storm Sewer
	Sidewalk
	Water
	Sewer
X	Electric
	Gas
	Curb
	Street Lights
	Standard Utilities
	Underground Utils.

Topography of Site

X	Level
	Rolling
X	Low
	High
	Landscaped
	Swamp
X	Wooded
	Pond
	Waterfront
	Ravine
	Wetland
	Flood Plain
X	OPEN/PINES

Who	When	What
GLA	05/13/2021	INSPECTION

Land Value Estimates for Land Table 4010.LAND VALUES

Description	Frontage	Depth	* Factors * Front	Depth	Rate	%Adj.	Reason	Value
ORLAND HID	150.00	0.00	1.0000	1.0000	233	100		34,950
	150.00	0.00	1.0000	1.0000	0	100		0

300 Actual Front Feet, 0.00 Total Acres Total Est. Land Value = 34,950

Land Improvement Cost Estimates

Description	Rate	Size	% Good	Cash Value
D/W/P: 3.5 Concrete	6.63	504	0	0

Total Estimated Land Improvements True Cash Value = 0

Year	Land Value	Building Value	Assessed Value	Board of Review	Tribunal/ Other	Taxable Value
2024	17,500	63,900	81,400			43,640C
2023	10,500	52,300	62,800			41,562C
2022	9,300	44,300	53,600			39,583C
2021	7,800	43,500	51,300			38,319C

The Equalizer. Copyright (c) 1999 - 2009. Licensed To: Township of Greenwood, County of Wexford, Michigan

*** Information herein deemed reliable but not guaranteed***

Building Type

X	Single Family
	Mobile Home
	Town Home
	Duplex
	A-Frame
X	Wood Frame

Building Style: PLAIN

Yr Built	Remodeled
0	0

Condition: Good

Room List

	Basement
	1st Floor
	2nd Floor
	Bedrooms

(1) Exterior

X	Wood/Shingle
	Aluminum/Vinyl
	Brick
X	Insulation

(2) Windows

	Many		Large
X	Avg.	X	Avg.
	Few		Small

	Wood Sash
	Metal Sash
X	Vinyl Sash
	Double Hung
	Horiz. Slide
	Casement
	Double Glass
	Patio Doors
X	Storms & Screens

(3) Roof

X	Gable		Gambrel
	Hip		Mansard
	Flat		Shed

X	Asphalt Shingle

Chimney:

(3) Roof (cont.)

	Eavestrough
X	Insulation
0	Front Overhang
0	Other Overhang

(4) Interior

X	Drywall		Plaster
	Paneled		Wood T&G

Trim & Decoration

	Ex	X	Ord		Min

Size of Closets

	Lg	X	Ord		Small

Doors:		Solid	X	H.C.	

(5) Floors

Kitchen:
Other: Linoleum
Other: Carpeted

(6) Ceilings

X	Drywall

(7) Excavation

Basement: 0 S.F.
Crawl: 0 S.F.
Slab: 1008 S.F.
Height to Joists: 0.0

(8) Basement

	Conc. Block
	Poured Conc.
	Stone
	Treated Wood
	Concrete Floor

(9) Basement Finish

	Recreation SF
	Living SF
	Walkout Doors (B)
	No Floor SF
	Walkout Doors (A)

(10) Floor Support

Joists:
Unsupported Len:
Cntr.Sup:

(11) Heating/Cooling

X	Gas		Oil		Elec.
	Wood		Coal		Steam

	Forced Air w/o Ducts
X	Forced Air w/ Ducts
	Forced Hot Water
	Electric Baseboard
	Elec. Ceil. Radiant
	Radiant (in-floor)
	Electric Wall Heat
	Space Heater
	Wall/Floor Furnace
	Forced Heat & Cool
	Heat Pump
	No Heating/Cooling

	Central Air
	Wood Furnace

(12) Electric

150	Amps Service

No./Qual. of Fixtures

	Ex.	X	Ord.		Min

No. of Elec. Outlets

	Many	X	Ave.		Few

(13) Plumbing

	Average Fixture(s)
1	3 Fixture Bath
	2 Fixture Bath
	Softener, Auto
	Softener, Manual
	Solar Water Heat
	No Plumbing
	Extra Toilet
	Extra Sink
	Separate Shower
	Ceramic Tile Floor
	Ceramic Tile Wains
	Ceramic Tub Alcove
	Vent Fan

(14) Water/Sewer

	Public Water
	Public Sewer
1	Water Well
1	1000 Gal Septic
	2000 Gal Septic

Lump Sum Items:

(15) Built-ins

	Appliance Allow.
	Cook Top
	Dishwasher
	Garbage Disposal
	Bath Heater
	Vent Fan
	Hot Tub
	Unvented Hood
	Vented Hood
	Intercom
	Jacuzzi Tub
	Jacuzzi repl.Tub
	Oven
	Microwave
	Standard Range
	Self Clean Range
	Sauna
	Trash Compactor
	Central Vacuum
	Security System

(15) Fireplaces

	Interior 1 Story
	Interior 2 Story
	2nd/Same Stack
	Two Sided
	Exterior 1 Story
	Exterior 2 Story
	Prefab 1 Story
	Prefab 2 Story
	Heat Circulator
	Raised Hearth
	Wood Stove
	Direct-Vented Gas

Class: CD
Effec. Age: 39
Floor Area: 1,008
Total Base New : 161,724 E.C.F.
Total Depr Cost: 98,633 X 1.297
Estimated T.C.V: 127,927

(16) Porches/Decks

Area	Type
100	WGEP (1 Story)
80	Treated Wood
192	Treated Wood

(17) Garage

Year Built:
Car Capacity:
Class: CD
Exterior: Siding
Brick Ven.: 0
Stone Ven.: 0
Common Wall: 1 Wall
Foundation: 42 Inch
Finished ?:
Auto. Doors: 0
Mech. Doors: 0
Area: 576
% Good: 0
Storage Area: 0
No Conc. Floor: 0

Bsmnt Garage:

Carport Area:
Roof:

Cost Est. for Res. Bldg: 1 Single Family PLAIN Cls CD Blt 0
(11) Heating System: Forced Air w/ Ducts
Ground Area = 1008 SF Floor Area = 1008 SF.
Phy/Ab.Phy/Func/Econ/Comb. % Good=61/100/100/100/61
Building Areas

Stories	Exterior	Foundation	Size	Cost New	Depr. Cost	
1 Story	Siding	Slab	1,008			
			Total:	115,879	70,686	
Other Additions/Adjustments						
Water/Sewer						
1000 Gal Septic			1	4,582	2,795	
Water Well, 100 Feet			1	5,680	3,465	
Porches						
WGEP (1 Story)			100	8,895	5,426	
Deck						
Treated Wood			80	2,229	1,360	
Treated Wood			192	3,963	2,417	
Garages						
Class: CD Exterior: Siding Foundation: 42 Inch (Unfinished)						
Base Cost			576	22,401	13,665	
Common Wall: 1 Wall			1	-2,529	-1,543	
Local Cost Items						
SHED			80	624	362	*5
			Totals:	161,724	98,633	

Notes:
ECF (RESIDENTIAL) 1.297 => TCV: 127,927

*** Information herein deemed reliable but not guaranteed***

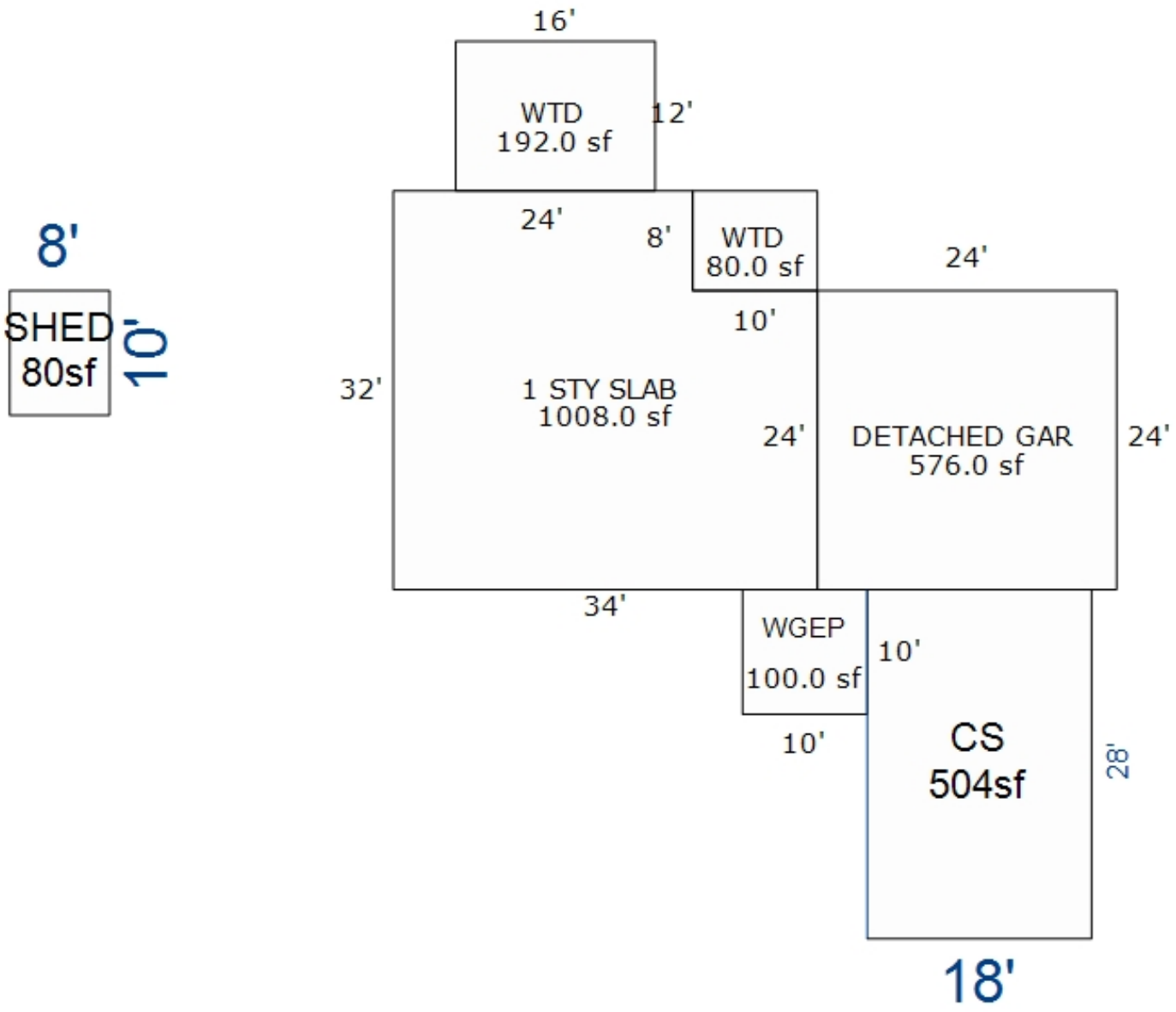

*** Information herein deemed reliable but not guaranteed***

Parcel Number: 2410-OH-20 Jurisdiction: GREENWOOD TWP County: WEXFORD Printed on 02/15/2024

Grantor	Grantee	Sale Price	Sale Date	Inst. Type	Terms of Sale	Liber & Page	Verified By	Prcnt. Trans.
HOEKSEMA, SALLY	HOEKSEMA, SALLY TRUST	0	06/27/2021	QC	14-INTO/OUT OF TRUST	690/2110	DEED	0.0

Property Address

6941 N 27 RD

Owner's Name/Address

HOEKSEMA, SALLY TRUST
1133 WALLLAKE DR
DELTON MI 49046

Tax Description

LOT 20 ORLANDO'S HIDEAWAY GW. SEC. 31 T24N R10W -MANTON-

Comments/Influences

Class: RESIDENTIAL-IMPROV Zoning:

School: MANTON CONSOLIDATED SCHOOLS

P.R.E. 0%

:

2024 Est TCV 166,177 TCV/TFA: 230.80

Building Permit(s)	Date	Number	Status

X	Improved		Vacant

	Public Improvements
	Dirt Road
X	Gravel Road
	Paved Road
	Storm Sewer
	Sidewalk
	Water
	Sewer
X	Electric
	Gas
	Curb
	Street Lights
	Standard Utilities
	Underground Utils.

	Topography of Site
X	Level
	Rolling
X	Low
	High
	Landscaped
X	Swamp
X	Wooded
	Pond
	Waterfront
	Ravine
	Wetland
	Flood Plain
X	OPEN/PINES

Who	When	What
GLA	10/31/2022	INSPECTION

Land Value Estimates for Land Table 4010.LAND VALUES

Description	Frontage	Depth	* Factors * Front	Depth	Rate	%Adj.	Reason	Value
ORLAND HID	250.00	0.00	1.0000	1.0000	233	100		58,250
	250.00	0.00	1.0000	1.0000	0	100		0
500 Actual Front Feet, 0.00 Total Acres							Total Est. Land Value =	58,250

Land Improvement Cost Estimates

Description	Rate	Size	% Good	Cash Value
Wood Frame	29.74	96	61	1,742
Total Estimated Land Improvements True Cash Value =				1,742

Year	Land Value	Building Value	Assessed Value	Board of Review	Tribunal/ Other	Taxable Value
2024	29,100	54,000	83,100			29,518C
2023	17,500	44,200	61,700			28,113C
2022	15,500	37,500	53,000			26,775C
2021	13,000	56,400	69,400			36,194C

The Equalizer. Copyright (c) 1999 - 2009. Licensed To: Township of Greenwood, County of Wexford, Michigan

*** Information herein deemed reliable but not guaranteed***

Building Type

X	Single Family
	Mobile Home
	Town Home
	Duplex
	A-Frame
X	Wood Frame

Building Style: PLAIN

Yr Built	Remodeled
0	0

Condition: Good

Room List

	Basement
	1st Floor
	2nd Floor
	Bedrooms

(1) Exterior

	Wood/Shingle
X	Aluminum/Vinyl
	Brick
X	Insulation

(2) Windows

	Many		Large
X	Avg.	X	Avg.
	Few		Small

	Wood Sash
	Metal Sash
X	Vinyl Sash
	Double Hung
	Horiz. Slide
	Casement
	Double Glass
	Patio Doors
X	Storms & Screens

(3) Roof

X	Gable		Gambrel
	Hip		Mansard
	Flat		Shed

X	Asphalt Shingle

Chimney:

(3) Roof (cont.)

	Eavestrough
X	Insulation
0	Front Overhang
0	Other Overhang

(4) Interior

X	Drywall		Plaster
	Paneled		Wood T&G

Trim & Decoration

	Ex	X	Ord		Min

Size of Closets

	Lg	X	Ord		Small

Doors:		Solid	X	H.C.	

(5) Floors

Kitchen:
Other: Linoleum
Other: Carpeted

(6) Ceilings

X	Drywall		

(7) Excavation

Basement: 0 S.F.
Crawl: 720 S.F.
Slab: 0 S.F.
Height to Joists: 0.0

(8) Basement

	Conc. Block
	Poured Conc.
	Stone
	Treated Wood
	Concrete Floor

(9) Basement Finish

	Recreation SF
	Living SF
	Walkout Doors (B)
	No Floor SF
	Walkout Doors (A)

(10) Floor Support

Joists:
Unsupported Len:
Cntr.Sup:

(11) Heating/Cooling

X	Gas		Oil		Elec.
	Wood		Coal		Steam

	Forced Air w/o Ducts
X	Forced Air w/ Ducts
	Forced Hot Water
	Electric Baseboard
	Elec. Ceil. Radiant
	Radiant (in-floor)
	Electric Wall Heat
	Space Heater
	Wall/Floor Furnace
	Forced Heat & Cool
	Heat Pump
	No Heating/Cooling

	Central Air
	Wood Furnace

(12) Electric

150	Amps Service

No./Qual. of Fixtures

	Ex.	X	Ord.		Min

No. of Elec. Outlets

	Many	X	Ave.		Few

(13) Plumbing

	Average Fixture(s)
1	3 Fixture Bath
	2 Fixture Bath
	Softener, Auto
	Softener, Manual
	Solar Water Heat
	No Plumbing
	Extra Toilet
	Extra Sink
	Separate Shower
	Ceramic Tile Floor
	Ceramic Tile Wains
	Ceramic Tub Alcove
	Vent Fan

(14) Water/Sewer

	Public Water
	Public Sewer
1	Water Well
1	1000 Gal Septic
	2000 Gal Septic

Lump Sum Items:

(15) Built-ins

	Appliance Allow.
	Cook Top
	Dishwasher
	Garbage Disposal
	Bath Heater
	Vent Fan
	Hot Tub
	Unvented Hood
	Vented Hood
	Intercom
	Jacuzzi Tub
	Jacuzzi repl.Tub
	Oven
	Microwave
	Standard Range
	Self Clean Range
	Sauna
	Trash Compactor
	Central Vacuum
	Security System

(15) Fireplaces

	Interior 1 Story
	Interior 2 Story
	2nd/Same Stack
	Two Sided
	Exterior 1 Story
	Exterior 2 Story
	Prefab 1 Story
	Prefab 2 Story
	Heat Circulator
	Raised Hearth
	Wood Stove
	Direct-Vented Gas

Class: CD
Effec. Age: 38
Floor Area: 720
Total Base New : 132,049 E.C.F.
Total Depr Cost: 81,870 X 1.297
Estimated T.C.V: 106,185

(16) Porches/Decks

Area	Type
48	WGEP (1 Story)
276	WPP
64	CCP (1 Story)

(17) Garage

Year Built:
Car Capacity:
Class: CD
Exterior: Siding
Brick Ven.: 0
Stone Ven.: 0
Common Wall: Detache
Foundation: 42 Inch
Finished ?:
Auto. Doors: 0
Mech. Doors: 0
Area: 368
% Good: 0
Storage Area: 0
No Conc. Floor: 0

Bsmnt Garage:

Carport Area:
Roof:

Cost Est. for Res. Bldg: 1 Single Family PLAIN Cls CD Blt 0
(11) Heating System: Forced Air w/ Ducts
Ground Area = 720 SF Floor Area = 720 SF.
Phy/Ab.Phy/Func/Econ/Comb. % Good=62/100/100/100/62
Building Areas

Stories	Exterior	Foundation	Size	Cost New	Depr. Cost
1+ Story	Siding	Crawl Space	720		
			Total:	93,414	57,916
Other Additions/Adjustments					
Water/Sewer					
1000 Gal Septic			1	4,582	2,841
Water Well, 100 Feet			1	5,680	3,522
Porches					
WGEP (1 Story)			48	5,495	3,407
WPP			276	4,496	2,788
CCP (1 Story)			64	1,741	1,079
Garages					
Class: CD Exterior: Siding Foundation: 42 Inch (Unfinished)					
Base Cost			368	16,641	10,317
			Totals:	132,049	81,870

Notes:
ECF (RESIDENTIAL) 1.297 => TCV: 106,185

*** Information herein deemed reliable but not guaranteed***

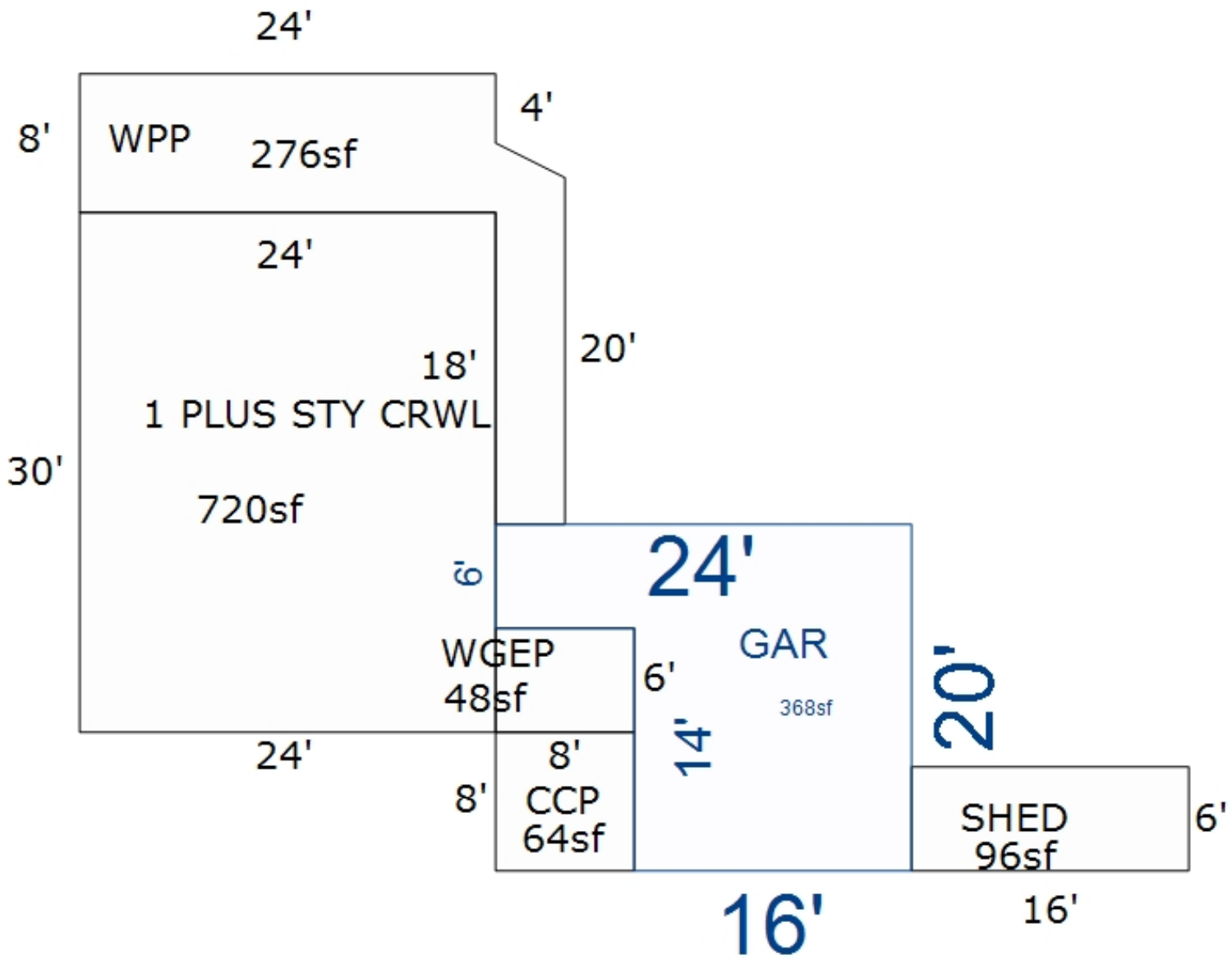

*** Information herein deemed reliable but not guaranteed***

Parcel Number: 2410-OH-21 Jurisdiction: GREENWOOD TWP County: WEXFORD Printed on 02/15/2024

Grantor	Grantee	Sale Price	Sale Date	Inst. Type	Terms of Sale	Liber & Page	Verified By	Prcnt. Trans.
TREMAYNE, RICHARD	LAFOREST JAMES E	124,900	11/26/2013	WD	03-ARM'S LENGTH		DEED	100.0
FANNIE MAE	TREMAYNE, RICHARD	60,375	03/07/2012	WD	11-FROM LENDING INSTITUTI	646/2699	DEED	100.0
CHASE HOME FINANCE LLC	FANNIE MAE	0	08/09/2010	QC	17-LENDING TO LENDING	635/2625	DEED	0.0
CARRICO, THOMAS A & LESLIE	CHASE HOME FINANCE LLC	134,863	08/06/2010	SD	10-FORECLOSURE	632/697	DEED	0.0

Property Address

6961 N 27 RD

Owner's Name/Address

LAFOREST, JAMES E
6961 N 27 RD
MANTON MI 49663

Tax Description

LOT 21 ORLANDO'S HIDEAWAY GW. SEC. 31 T24N R10W -MANTON-

Comments/Influences

Class: RESIDENTIAL-IMPROV Zoning:

School: MANTON CONSOLIDATED SCHOOLS

P.R.E. 100% 11/26/2013

:

2024 Est TCV 244,274 TCV/TFA: 166.74

Building Permit(s)	Date	Number	Status
RESIDENTIAL - REMODEL	02/14/2007	PM9521	

X Improved | Vacant

Public Improvements

- Dirt Road
- X Gravel Road
- Paved Road
- Storm Sewer
- Sidewalk
- Water
- Sewer
- X Electric
- Gas
- Curb
- Street Lights
- Standard Utilities
- Underground Utils.

Topography of Site

- X Level
- X Rolling
- X Low
- X High
- Landscaped
- Swamp
- X Wooded
- Pond
- Waterfront
- Ravine
- Wetland
- Flood Plain
- X OPEN/PINES

Who	When	What
JB	10/23/2023	PHOTO
GLA	05/13/2021	INSPECTION
GLA	08/07/2014	INSPECTION

Land Value Estimates for Land Table 4010.LAND VALUES

Description	Frontage	Depth	* Factors * Front	Depth	Rate	%Adj.	Reason	Value
	190.00	0.00	1.0000	1.0000	0	100		0
ORLAND HID	190.00	0.00	1.0000	1.0000	233	100		44,270

380 Actual Front Feet, 0.00 Total Acres Total Est. Land Value = 44,270

Land Improvement Cost Estimates

Description	Rate	Size	% Good	Cash Value
D/W/P: Asphalt Paving	3.12	2016	41	2,579
D/W/P: 3.5 Concrete	6.63	2843	41	7,728
Total Estimated Land Improvements True Cash Value =				10,307

Year	Land Value	Building Value	Assessed Value	Board of Review	Tribunal/ Other	Taxable Value
2024	22,100	100,000	122,100			74,204C
2023	13,300	82,700	96,000			70,671C
2022	11,800	70,500	82,300			67,306C
2021	9,900	70,900	80,800			65,156C

The Equalizer. Copyright (c) 1999 - 2009.
Licensed To: Township of Greenwood, County of Wexford, Michigan

*** Information herein deemed reliable but not guaranteed***

Building Type

X	Single Family
	Mobile Home
	Town Home
	Duplex
	A-Frame
X	Wood Frame

Building Style: PLAIN

Yr Built	Remodeled
1975	0

Condition: Average

Room List

	Basement
	1st Floor
	2nd Floor
	Bedrooms

(1) Exterior

	Wood/Shingle
	Aluminum/Vinyl
	Brick
X	Vinyl
	Insulation

(2) Windows

X	Many		Large
	Avg.	X	Avg.
	Few		Small

X	Wood Sash
	Metal Sash
	Vinyl Sash
	Double Hung
X	Horiz. Slide
	Casement
	Double Glass
	Patio Doors
X	Storms & Screens

(3) Roof

X	Gable		Gambrel
	Hip		Mansard
	Flat		Shed

X	Asphalt Shingle

Chimney: Block

(3) Roof (cont.)

	Eavestrough
	Insulation
0	Front Overhang
0	Other Overhang

(4) Interior

	Drywall		Plaster
	Paneled		Wood T&G

Trim & Decoration

	Ex		Ord		Min

Size of Closets

	Lg		Ord		Small

Doors:		Solid		H.C.	

(5) Floors

Kitchen:
Other:
Other:

(6) Ceilings

(7) Excavation

Basement: 756 S.F.
Crawl: 0 S.F.
Slab: 520 S.F.
Height to Joists: 0.0

(8) Basement

	Conc. Block
	Poured Conc.
	Stone
	Treated Wood
	Concrete Floor

(9) Basement Finish

612	Recreation	SF
	Living	SF
	Walkout Doors (B)	
	No Floor	SF
	Walkout Doors (A)	

(10) Floor Support

Joists:
Unsupported Len:
Cntr.Sup:

(11) Heating/Cooling

X	Gas		Oil		Elec.
	Wood		Coal		Steam

	Forced Air w/o Ducts
X	Forced Air w/ Ducts
	Forced Hot Water
	Electric Baseboard
	Elec. Ceil. Radiant
	Radiant (in-floor)
	Electric Wall Heat
	Space Heater
	Wall/Floor Furnace
	Forced Heat & Cool
	Heat Pump
	No Heating/Cooling

	Central Air
	Wood Furnace

(12) Electric

0	Amps Service

No./Qual. of Fixtures

	Ex.		Ord.		Min

No. of Elec. Outlets

	Many		Ave.		Few

(13) Plumbing

1	Average Fixture(s)
	3 Fixture Bath
	2 Fixture Bath
	Softener, Auto
	Softener, Manual
	Solar Water Heat
	No Plumbing
	Extra Toilet
	Extra Sink
	Separate Shower
	Ceramic Tile Floor
	Ceramic Tile Wains
	Ceramic Tub Alcove
	Vent Fan

(14) Water/Sewer

	Public Water
	Public Sewer
1	Water Well
1	1000 Gal Septic
	2000 Gal Septic

Lump Sum Items:

(15) Built-ins

	Appliance Allow.
	Cook Top
	Dishwasher
	Garbage Disposal
	Bath Heater
	Vent Fan
	Hot Tub
	Unvented Hood
	Vented Hood
	Intercom
	Jacuzzi Tub
	Jacuzzi repl.Tub
	Oven
	Microwave
	Standard Range
	Self Clean Range
	Sauna
	Trash Compactor
	Central Vacuum
	Security System

(15) Fireplaces

	Interior 1 Story
	Interior 2 Story
	2nd/Same Stack
	Two Sided
1	Exterior 1 Story
	Exterior 2 Story
	Prefab 1 Story
	Prefab 2 Story
	Heat Circulator
	Raised Hearth
	Wood Stove
	Direct-Vented Gas

Class: C
Effec. Age: 48
Floor Area: 1,465
Total Base New : 281,073 E.C.F.
Total Depr Cost: 146,258 X 1.297
Estimated T.C.V: 189,697

(16) Porches/Decks

Area	Type
96	CCP (1 Story)
55	CCP (1 Story)
252	WGEP (1 Story)
312	Treated Wood
64	Wood Balcony
64	Wood Balcony

(17) Garage

Year Built:
Car Capacity:
Class: C
Exterior: Siding
Brick Ven.: 0
Stone Ven.: 0
Common Wall: 1.5 Wal
Foundation: 42 Inch
Finished ?:
Auto. Doors: 0
Mech. Doors: 0
Area: 624
% Good: 0
Storage Area: 0
No Conc. Floor: 0

Bsmnt Garage:

Carport Area:
Roof:

Cost Est. for Res. Bldg: 1 Single Family PLAIN Cls C Blt 1975
(11) Heating System: Forced Air w/ Ducts
Ground Area = 1276 SF Floor Area = 1465 SF.
Phy/Ab.Phy/Func/Econ/Comb. % Good=52/100/100/100/52

Building Areas

Stories	Exterior	Foundation	Size	Cost New	Depr. Cost
1.25 Story	Siding	Basement	756		
1 Story	Siding	Slab	520		
			Total:	195,770	101,800
Other Additions/Adjustments					
Recreation Room			612	11,916	6,196
Water/Sewer					
1000 Gal Septic			1	4,899	2,547
Water Well, 100 Feet			1	5,849	3,041
Porches					
CCP (1 Story)			96	2,727	1,418
CCP (1 Story)			55	1,651	859
WGEP (1 Story)			252	17,900	9,308
Deck					
Treated Wood			312	5,582	2,903
Balcony					
Wood Balcony			64	2,626	1,366
Wood Balcony			64	2,626	1,366
Garages					
Class: C Exterior: Siding Foundation: 42 Inch (Unfinished)					
Base Cost			624	26,401	13,729
Common Wall: 1.5 Wall			1	-4,057	-2,110
Fireplaces					
Exterior 1 Story			1	6,559	3,411
Local Cost Items					

<<<<< Calculations too long. See Valuation printout for complete pricing. >>>>>

*** Information herein deemed reliable but not guaranteed***

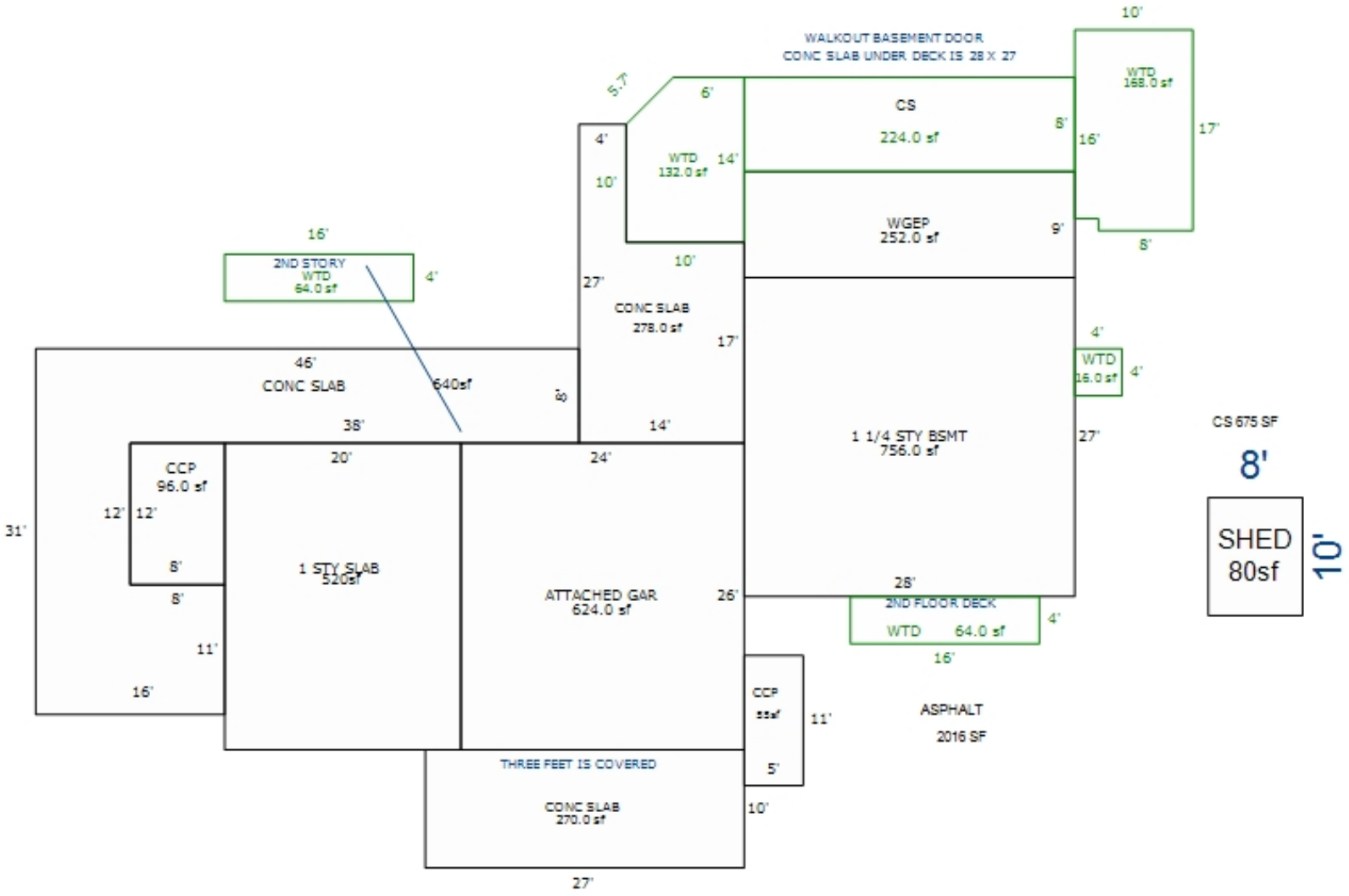

*** Information herein deemed reliable but not guaranteed***

Parcel Number: 2410-RETR-01 Jurisdiction: GREENWOOD TWP County: WEXFORD Printed on 02/15/2024

Grantor	Grantee	Sale Price	Sale Date	Inst. Type	Terms of Sale	Liber & Page	Verified By	Prcnt. Trans.
BOGER, RONALD D.	LOUCKS, JERRY LEE	26,000	07/10/2018	WD	03-ARM'S LENGTH	6831/32	DEED	100.0
DUNBAR, LEO A.	BOGER, RONALD D.	4,000	07/22/1988	LC	03-ARM'S LENGTH	311:894	DEED	0.0

Property Address

Owner's Name/Address

LOUCKS, JERRY LEE
8549 S 27 RD
CADILLAC MI 49601

Tax Description

LOTS 1 & 2 THE RETREAT GW. SEC. 10 T24N R10W -MANTON-

Comments/Influences

The Equalizer. Copyright (c) 1999 - 2009. Licensed To: Township of Greenwood, County of Wexford, Michigan

Class: RESIDENTIAL-VACANT Zoning:

School: MANTON CONSOLIDATED SCHOOLS

P.R.E. 0%

:

2024 Est TCV 70,875

Building Permit(s)	Date	Number	Status

[ ] Improved [X] Vacant

Public Improvements

	Dirt Road
X	Gravel Road
	Paved Road
	Storm Sewer
	Sidewalk
	Water
	Sewer
X	Electric
	Gas
	Curb
	Street Lights
	Standard Utilities
	Underground Utils.

Topography of Site

	Level
X	Rolling
	Low
X	High
	Landscaped
	Swamp
X	Wooded
	Pond
	Waterfront
	Ravine
	Wetland
	Flood Plain
X	OPEN

Who	When	What
GLA	10/31/2022	INSPECTION

Land Value Estimates for Land Table 4010.LAND VALUES

Description	Frontage	Depth	* Factors * Front	Depth	Rate	%Adj.	Reason	Value
HELSEL RIV LOW	225.00	0.00	1.0000	1.0000	315	100		70,875
225 Actual Front Feet, 0.00 Total Acres							Total Est. Land Value =	70,875

Year	Land Value	Building Value	Assessed Value	Board of Review	Tribunal/ Other	Taxable Value
2024	35,400	0	35,400			22,094C
2023	30,400	0	30,400			21,042C
2022	26,200	0	26,200			20,040C
2021	19,400	0	19,400			19,400S

*** Information herein deemed reliable but not guaranteed***

Parcel Number: 2410-RETR-03 Jurisdiction: GREENWOOD TWP County: WEXFORD Printed on 02/15/2024

Grantor	Grantee	Sale Price	Sale Date	Inst. Type	Terms of Sale	Liber & Page	Verified By	Prcnt. Trans.
DUNBAR, LEO A. 10%	THOMPSON, WM. R.	3,500	11/18/1986	LC	03-ARM'S LENGTH	304:283	DEED	0.0

Property Address

3895 RIVERVIEW RD

Owner's Name/Address

THOMPSON, WILLIAM R.
6919 PINE LAKE RD
DELTON MI 49056

Tax Description

LOT 3 & SE 1/2 OF LOT 4 THE RETREAT GW. SEC. 10 T24N R10W -MANTON-

Comments/Influences

Class: RESIDENTIAL-IMPROV Zoning:

School: MANTON CONSOLIDATED SCHOOLS

P.R.E. 0%

:

2024 Est TCV 148,379 TCV/TFA: 128.80

Building Permit(s)	Date	Number	Status
RESIDENTIAL - REMODEL	06/03/2004	PM7603	

X	Improved		Vacant

	Public Improvements
	Dirt Road
X	Gravel Road
	Paved Road
	Storm Sewer
	Sidewalk
	Water
	Sewer
X	Electric
	Gas
	Curb
	Street Lights
	Standard Utilities
	Underground Utils.

	Topography of Site
	Level
X	Rolling
	Low
X	High
	Landscaped
	Swamp
X	Wooded
	Pond
	Waterfront
	Ravine
	Wetland
	Flood Plain
X	OPEN

Who	When	What
GLA	05/13/2021	INSPECTION

Land Value Estimates for Land Table 4010.LAND VALUES

Description	Frontage	Depth	* Factors * Front	Depth	Rate	%Adj.	Reason	Value
RET M R HIGH	140.00	0.00	1.0000	1.0000	315	100		44,100
140 Actual Front Feet, 0.00 Total Acres							Total Est. Land Value =	44,100

Year	Land Value	Building Value	Assessed Value	Board of Review	Tribunal/ Other	Taxable Value
2024	22,100	52,100	74,200			21,457C
2023	20,700	42,700	63,400			20,436C
2022	20,500	36,100	56,600			19,463C
2021	4,000	36,400	40,400			18,842C

The Equalizer. Copyright (c) 1999 - 2009.
Licensed To: Township of Greenwood, County of Wexford, Michigan

*** Information herein deemed reliable but not guaranteed***

Building Type

X	Single Family
	Mobile Home
	Town Home
	Duplex
	A-Frame
X	Wood Frame

Building Style: PLAIN

Yr Built	Remodeled
0	0

Condition: Good

Room List

	Basement
	1st Floor
	2nd Floor
	Bedrooms

(1) Exterior

X	Wood/Shingle
	Aluminum/Vinyl
	Brick
X	Insulation

(2) Windows

	Many		Large
X	Avg.	X	Avg.
	Few		Small

X	Wood Sash
	Metal Sash
	Vinyl Sash
	Double Hung
	Horiz. Slide
	Casement
	Double Glass
	Patio Doors
X	Storms & Screens

(3) Roof

X	Gable		Gambrel
	Hip		Mansard
	Flat		Shed

X	Asphalt Shingle

Chimney:

(3) Roof (cont.)

	Eavestrough
X	Insulation
0	Front Overhang
0	Other Overhang

(4) Interior

X	Drywall		Plaster
	Paneled		Wood T&G

Trim & Decoration

	Ex	X	Ord		Min

Size of Closets

	Lg	X	Ord		Small

Doors:		Solid	X	H.C.	

(5) Floors

Kitchen:
Other: Linoleum
Other: Carpeted

(6) Ceilings

X	Drywall

(7) Excavation

Basement: 0 S.F.
Crawl: 576 S.F.
Slab: 0 S.F.
Height to Joists: 0.0

(8) Basement

	Conc. Block
	Poured Conc.
	Stone
	Treated Wood
	Concrete Floor

(9) Basement Finish

	Recreation SF
	Living SF
	Walkout Doors (B)
	No Floor SF
	Walkout Doors (A)

(10) Floor Support

Joists:
Unsupported Len:
Cntr.Sup:

(11) Heating/Cooling

X	Gas		Oil		Elec.
	Wood		Coal		Steam

	Forced Air w/o Ducts
X	Forced Air w/ Ducts
	Forced Hot Water
	Electric Baseboard
	Elec. Ceil. Radiant
	Radiant (in-floor)
	Electric Wall Heat
	Space Heater
	Wall/Floor Furnace
	Forced Heat & Cool
	Heat Pump
	No Heating/Cooling

	Central Air
	Wood Furnace

(12) Electric

150	Amps Service

No./Qual. of Fixtures

	Ex.	X	Ord.		Min

No. of Elec. Outlets

	Many	X	Ave.		Few

(13) Plumbing

1	Average Fixture(s)
	3 Fixture Bath
	2 Fixture Bath
	Softener, Auto
	Softener, Manual
	Solar Water Heat
	No Plumbing
	Extra Toilet
	Extra Sink
	Separate Shower
	Ceramic Tile Floor
	Ceramic Tile Wains
	Ceramic Tub Alcove
	Vent Fan

(14) Water/Sewer

	Public Water
	Public Sewer
1	Water Well
1	1000 Gal Septic
	2000 Gal Septic

Lump Sum Items:

(15) Built-ins

	Appliance Allow.
	Cook Top
	Dishwasher
	Garbage Disposal
	Bath Heater
	Vent Fan
	Hot Tub
	Unvented Hood
	Vented Hood
	Intercom
	Jacuzzi Tub
	Jacuzzi repl.Tub
	Oven
	Microwave
	Standard Range
	Self Clean Range
	Sauna
	Trash Compactor
	Central Vacuum
	Security System

(15) Fireplaces

	Interior 1 Story
	Interior 2 Story
	2nd/Same Stack
	Two Sided
	Exterior 1 Story
	Exterior 2 Story
	Prefab 1 Story
	Prefab 2 Story
	Heat Circulator
	Raised Hearth
	Wood Stove
	Direct-Vented Gas

Class: D
Effec. Age: 37
Floor Area: 1,152
Total Base New : 127,619 E.C.F.
Total Depr Cost: 80,400 X 1.297
Estimated T.C.V: 104,279

(16) Porches/Decks

Area	Type

(17) Garage

Year Built:
Car Capacity:
Class:
Exterior:
Brick Ven.:
Stone Ven.:
Common Wall:
Foundation:
Finished ?:
Auto. Doors:
Mech. Doors:
Area:
% Good:
Storage Area:
No Conc. Floor:

Bsmnt Garage:

Carport Area:
Roof:

Cost Est. for Res. Bldg: 1 Single Family PLAIN Cls D Blt 0
(11) Heating System: Forced Air w/ Ducts
Ground Area = 576 SF Floor Area = 1152 SF.
Phy/Ab.Phy/Func/Econ/Comb. % Good=63/100/100/100/63
Building Areas

Stories	Exterior	Foundation	Size	Cost New	Depr. Cost
2 Story	Siding	Crawl Space	576		
			Total:	117,157	73,809
Other Additions/Adjustments					
Water/Sewer					
1000 Gal Septic			1	4,293	2,705
Water Well, 100 Feet			1	5,545	3,493
Local Cost Items					
SHED			80	624	393
			Totals:	127,619	80,400

Notes:

ECF (RESIDENTIAL) 1.297 => TCV: 104,279

*** Information herein deemed reliable but not guaranteed***

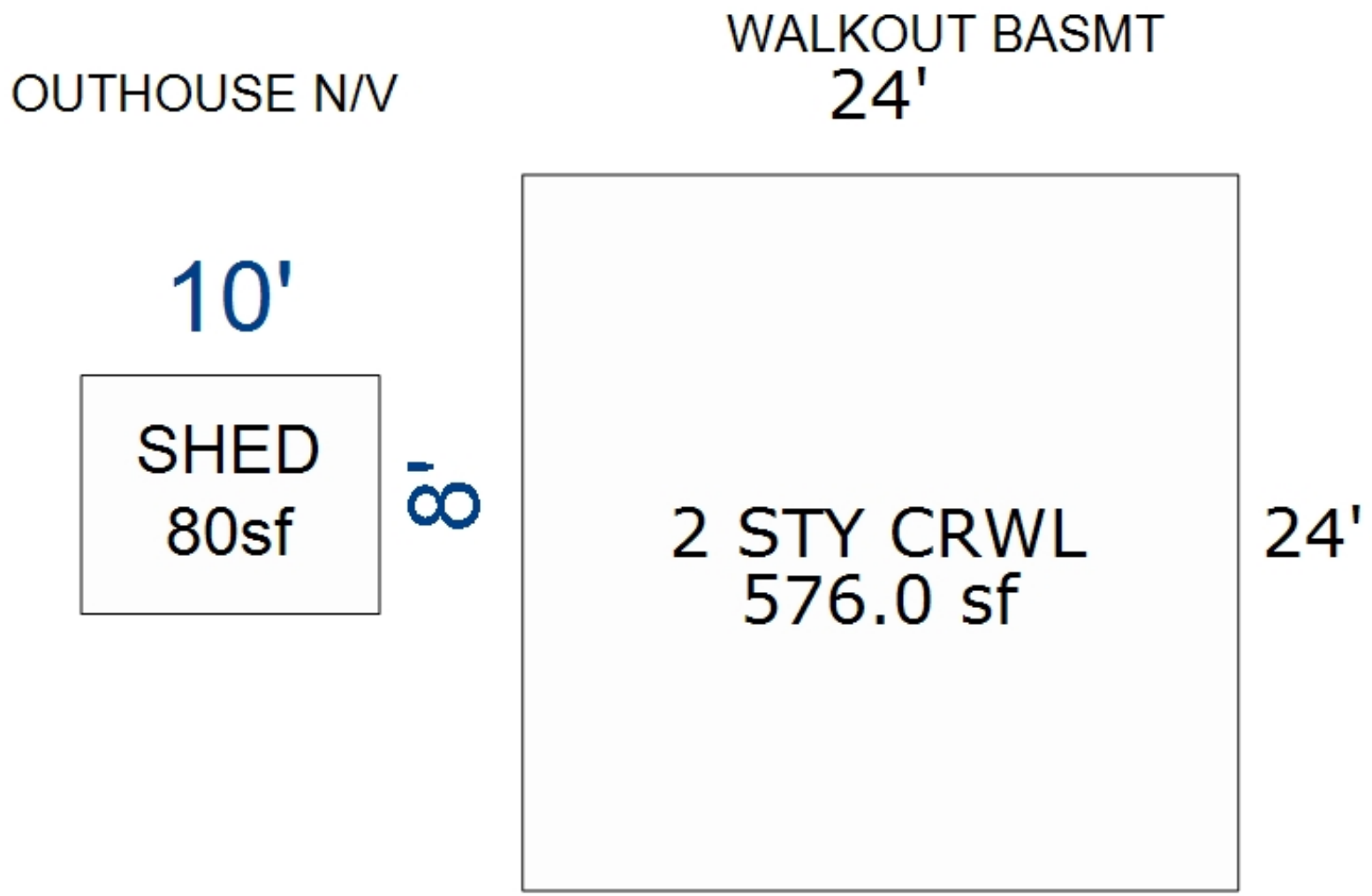

*** Information herein deemed reliable but not guaranteed***

Parcel Number: 2410-RETR-05 Jurisdiction: GREENWOOD TWP County: WEXFORD Printed on 02/15/2024

Grantor	Grantee	Sale Price	Sale Date	Inst. Type	Terms of Sale	Liber & Page	Verified By	Prcnt. Trans.
LAXTON, LARRY B.	BRIDSON, JOSHUA	115,000	06/24/2016	WD	03-ARM'S LENGTH	6772/887	DEED	100.0
DUNBAR	LAXTON	0	06/24/2016	WD	16-LC PAYOFF	6772/2886	DEED	0.0
DUNBAR, LEO A. 10%	LAXTON, LARRY B.	3,500	11/18/1986	LC	03-ARM'S LENGTH	304:279	DEED	0.0

Property Address
3875 RIVERVIEW RD

Owner's Name/Address
BRIDSON, JOSHUA
3875 RIVERVIEW RD
MANTON MI 49663

Tax Description
LOT 5 & NW 1/2 OF LOT 4 THE RETREAT GW. SEC. 10 T24N R10W -MANTON-

Comments/Influences

Class: RESIDENTIAL-IMPROV Zoning:
School: MANTON CONSOLIDATED SCHOOLS
P.R.E. 100% 06/30/2016
:
2024 Est TCV 145,605 TCV/TFA: 173.34

Building Permit(s)	Date	Number	Status

X Improved | Vacant

	Public Improvements
	Dirt Road
X	Gravel Road
	Paved Road
	Storm Sewer
	Sidewalk
	Water
	Sewer
X	Electric
	Gas
	Curb
	Street Lights
	Standard Utilities
	Underground Utils.

	Topography of Site
	Level
X	Rolling
	Low
X	High
	Landscaped
	Swamp
X	Wooded
	Pond
	Waterfront
	Ravine
	Wetland
	Flood Plain
X	OPEN

Who When What
GLA 05/13/2021 INSPECTION

Land Value Estimates for Land Table 4010.LAND VALUES

Description	Frontage	Depth	* Factors * Front	Depth	Rate	%Adj.	Reason	Value
RET M R HIGH	105.00	0.00	1.0000	1.0000	315	100		33,075
105 Actual Front Feet, 0.00 Total Acres							Total Est. Land Value =	33,075

Land Improvement Cost Estimates

Description	Rate	Size	% Good	Cash Value
D/W/P: 3.5 Concrete	6.63	244	58	938
Wood Frame	27.19	144	63	2,466
Total Estimated Land Improvements True Cash Value =				3,404

Year	Land Value	Building Value	Assessed Value	Board of Review	Tribunal/ Other	Taxable Value
2024	16,500	56,300	72,800			49,209C
2023	15,500	46,400	61,900			46,866C
2022	10,100	39,500	49,600			44,635C
2021	7,500	38,100	45,600			43,210C

The Equalizer. Copyright (c) 1999 - 2009. Licensed To: Township of Greenwood, County of Wexford, Michigan

*** Information herein deemed reliable but not guaranteed***

Building Type

X	Single Family
	Mobile Home
	Town Home
	Duplex
	A-Frame

X	Wood Frame

Building Style: PLAIN

Yr Built	Remodeled
0	0

Condition: Good

Room List

	Basement
	1st Floor
	2nd Floor
	Bedrooms

(1) Exterior

X	Wood/Shingle
	Aluminum/Vinyl
	Brick
X	Insulation

(2) Windows

	Many		Large
X	Avg.	X	Avg.
	Few		Small

X	Wood Sash
	Metal Sash
	Vinyl Sash
	Double Hung
	Horiz. Slide
	Casement
	Double Glass
	Patio Doors
X	Storms & Screens

(3) Roof

X	Gable		Gambrel
	Hip		Mansard
	Flat		Shed

X	Asphalt Shingle

Chimney:

(3) Roof (cont.)

	Eavestrough
X	Insulation
0	Front Overhang
0	Other Overhang

(4) Interior

X	Drywall		Plaster
	Paneled		Wood T&G

Trim & Decoration

	Ex	X	Ord		Min

Size of Closets

	Lg	X	Ord		Small

Doors:		Solid	X	H.C.	

(5) Floors

Kitchen:
Other: Linoleum
Other: Carpeted

(6) Ceilings

X	Drywall

(7) Excavation

Basement: 672 S.F.
Crawl: 0 S.F.
Slab: 0 S.F.
Height to Joists: 0.0

(8) Basement

	Conc. Block
	Poured Conc.
	Stone
	Treated Wood
	Concrete Floor

(9) Basement Finish

	Recreation SF
	Living SF
	Walkout Doors (B)
	No Floor SF
	Walkout Doors (A)

(10) Floor Support

Joists:
Unsupported Len:
Cntr.Sup:

(11) Heating/Cooling

X	Gas		Oil		Elec.
	Wood		Coal		Steam

	Forced Air w/o Ducts
X	Forced Air w/ Ducts
	Forced Hot Water
	Electric Baseboard
	Elec. Ceil. Radiant
	Radiant (in-floor)
	Electric Wall Heat
	Space Heater
	Wall/Floor Furnace
	Forced Heat & Cool
	Heat Pump
	No Heating/Cooling

	Central Air
	Wood Furnace

(12) Electric

150	Amps Service

No./Qual. of Fixtures

	Ex.	X	Ord.		Min

No. of Elec. Outlets

	Many	X	Ave.		Few

(13) Plumbing

	Average Fixture(s)
1	3 Fixture Bath
	2 Fixture Bath
	Softener, Auto
	Softener, Manual
	Solar Water Heat
	No Plumbing
	Extra Toilet
	Extra Sink
	Separate Shower
	Ceramic Tile Floor
	Ceramic Tile Wains
	Ceramic Tub Alcove
	Vent Fan

(14) Water/Sewer

	Public Water
	Public Sewer
1	Water Well
1	1000 Gal Septic
	2000 Gal Septic

Lump Sum Items:

(15) Built-ins

	Appliance Allow.
	Cook Top
	Dishwasher
	Garbage Disposal
	Bath Heater
	Vent Fan
	Hot Tub
	Unvented Hood
	Vented Hood
	Intercom
	Jacuzzi Tub
	Jacuzzi repl.Tub
	Oven
	Microwave
	Standard Range
	Self Clean Range
	Sauna
	Trash Compactor
	Central Vacuum
	Security System

(15) Fireplaces

	Interior 1 Story
	Interior 2 Story
	2nd/Same Stack
	Two Sided
	Exterior 1 Story
	Exterior 2 Story
	Prefab 1 Story
	Prefab 2 Story
	Heat Circulator
	Raised Hearth
	Wood Stove
	Direct-Vented Gas

Class: CD
Effec. Age: 37
Floor Area: 840
Total Base New : 133,549 E.C.F.
Total Depr Cost: 84,137 X 1.297
Estimated T.C.V: 109,126

(16) Porches/Decks

Area	Type
360	WPP
140	WPP

(17) Garage

Year Built:
Car Capacity:
Class:
Exterior:
Brick Ven.:
Stone Ven.:
Common Wall:
Foundation:
Finished ?:
Auto. Doors:
Mech. Doors:
Area:
% Good:
Storage Area:
No Conc. Floor:

Bsmnt Garage:

Carport Area:
Roof:

Cost Est. for Res. Bldg: 1 Single Family PLAIN Cls CD Blt 0
(11) Heating System: Forced Air w/ Ducts
Ground Area = 672 SF Floor Area = 840 SF.
Phy/Ab.Phy/Func/Econ/Comb. % Good=63/100/100/100/63
Building Areas

Stories	Exterior	Foundation	Size	Cost New	Depr. Cost
1.25 Story	Siding	Basement	672		
			Total:	109,587	69,041
Other Additions/Adjustments					
Water/Sewer					
1000 Gal Septic			1	4,582	2,887
Water Well, 100 Feet			1	5,680	3,578
Porches					
WPP			360	5,386	3,393
WPP			140	3,314	2,088
Local Cost Items					
OUTSIDE FURNACE			1	5,000	3,150
			Totals:	133,549	84,137

Notes:

ECF (RESIDENTIAL) 1.297 => TCV: 109,126

*** Information herein deemed reliable but not guaranteed***

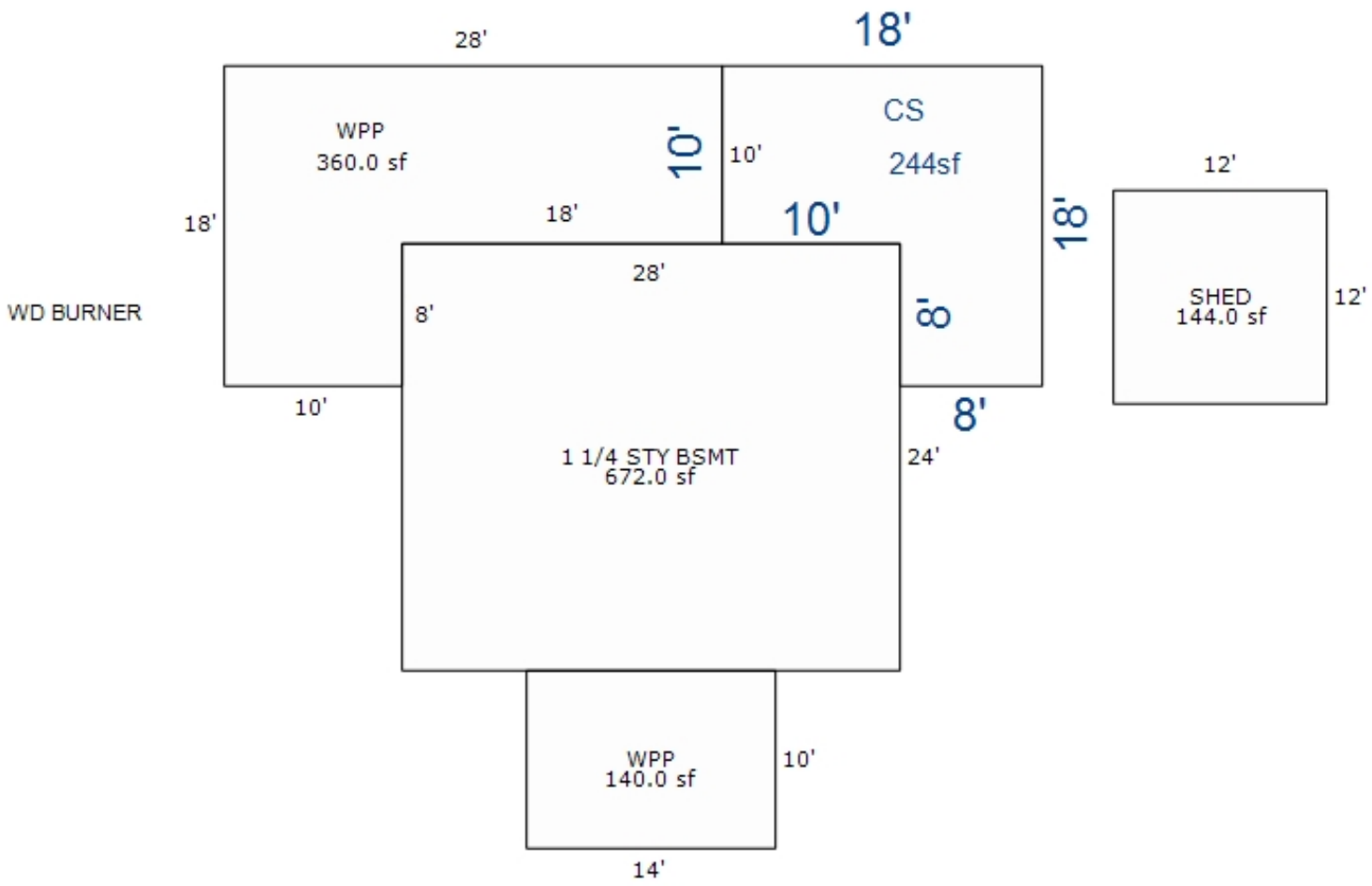

*** Information herein deemed reliable but not guaranteed***

Parcel Number: 2410-RETR-06 Jurisdiction: GREENWOOD TWP County: WEXFORD Printed on 02/15/2024

Grantor	Grantee	Sale Price	Sale Date	Inst. Type	Terms of Sale	Liber & Page	Verified By	Prcnt. Trans.
JAMIESON, MARIA	ANSTETT, RICHARD K II & SH	122,500	02/12/2020	WD	03-ARM'S LENGTH	686/2238	DEED	100.0
BRAND, NEIL J.	JAMIESON, MARIA	82,297	09/23/2016	WD	03-ARM'S LENGTH	6781/562	DEED	100.0
BRAND, NEIL & MARIANNNE TR		0	11/25/2015	OTH	14-INTO/OUT OF TRUST	6781/561	DEED	0.0
MILLER, LAWRENCE	BRAND, NEIL J.	14,000	11/04/1988	LC	03-ARM'S LENGTH	313:409	DEED	0.0

Property Address

3859 RIVERVIEW RD

Owner's Name/Address

ANSTETT, RICHARD K II & SHANI L
9340 E 18 1/2 RD
MANTON MI 49663

Tax Description

LOT 6 THE RETREAT GW. SEC. 10 T24N R10W
-MANTON-

Comments/Influences

Class: RESIDENTIAL-IMPROV Zoning:

School: MANTON CONSOLIDATED SCHOOLS

P.R.E. 0%

:

2024 Est TCV 105,892 TCV/TFA: 101.82

Building Permit(s)	Date	Number	Status

[X] Improved [ ] Vacant

	Public Improvements
	Dirt Road
X	Gravel Road
	Paved Road
	Storm Sewer
	Sidewalk
	Water
	Sewer
X	Electric
	Gas
	Curb
	Street Lights
	Standard Utilities
	Underground Utils.

	Topography of Site
	Level
X	Rolling
	Low
X	High
	Landscaped
	Swamp
X	Wooded
	Pond
	Waterfront
	Ravine
	Wetland
	Flood Plain
X	OPEN

Who	When	What
GLA	05/13/2021	INSPECTION

Land Value Estimates for Land Table 4010.LAND VALUES

Description	Frontage	Depth	* Factors * Front	Depth	Rate	%Adj.	Reason	Value
RET M R HIGH	80.00	0.00	1.0000	1.0000	315	100		25,200
80 Actual Front Feet, 0.00 Total Acres							Total Est. Land Value =	25,200

Land Improvement Cost Estimates

Description	Rate	Size	% Good	Cash Value
D/W/P: 3.5 Concrete	5.82	126	0	0
Total Estimated Land Improvements True Cash Value =				0

Year	Land Value	Building Value	Assessed Value	Board of Review	Tribunal/ Other	Taxable Value
2024	12,600	40,300	52,900			42,478C
2023	11,800	33,200	45,000			40,456C
2022	10,800	28,100	38,900			38,530C
2021	8,000	29,300	37,300			37,300S

The Equalizer. Copyright (c) 1999 - 2009.
Licensed To: Township of Greenwood, County of Wexford, Michigan

*** Information herein deemed reliable but not guaranteed***

Building Type

X	Single Family
	Mobile Home
	Town Home
	Duplex
	A-Frame
X	Wood Frame

Building Style: PLAIN

Yr Built	Remodeled
0	0

Condition: Good

Room List

	Basement
	1st Floor
	2nd Floor
	Bedrooms

(1) Exterior

	Wood/Shingle
X	Aluminum/Vinyl
	Brick
X	Insulation

(2) Windows

	Many		Large
X	Avg.	X	Avg.
	Few		Small

	Wood Sash
	Metal Sash
X	Vinyl Sash
	Double Hung
	Horiz. Slide
	Casement
	Double Glass
	Patio Doors
X	Storms & Screens

(3) Roof

X	Gable		Gambrel
	Hip		Mansard
	Flat		Shed

X	Asphalt Shingle

Chimney:

(3) Roof (cont.)

	Eavestrough
X	Insulation
0	Front Overhang
0	Other Overhang

(4) Interior

X	Drywall		Plaster
	Paneled		Wood T&G

Trim & Decoration

	Ex	X	Ord		Min

Size of Closets

	Lg	X	Ord		Small

Doors:		Solid	X	H.C.	

(5) Floors

Kitchen:
Other: Linoleum
Other: Carpeted

(6) Ceilings

X	Drywall		

(7) Excavation

Basement: 0 S.F.
Crawl: 0 S.F.
Slab: 1040 S.F.
Height to Joists: 0.0

(8) Basement

	Conc. Block
	Poured Conc.
	Stone
	Treated Wood
	Concrete Floor

(9) Basement Finish

	Recreation SF
	Living SF
	Walkout Doors (B)
	No Floor SF
	Walkout Doors (A)

(10) Floor Support

Joists:
Unsupported Len:
Cntr.Sup:

(11) Heating/Cooling

X	Gas		Oil		Elec.
	Wood		Coal		Steam

	Forced Air w/o Ducts
X	Forced Air w/ Ducts
	Forced Hot Water
	Electric Baseboard
	Elec. Ceil. Radiant
	Radiant (in-floor)
	Electric Wall Heat
	Space Heater
	Wall/Floor Furnace
	Forced Heat & Cool
	Heat Pump
	No Heating/Cooling
	Central Air
	Wood Furnace

(12) Electric

150	Amps Service

No./Qual. of Fixtures

	Ex.	X	Ord.		Min

No. of Elec. Outlets

	Many	X	Ave.		Few

(13) Plumbing

	Average Fixture(s)
1	3 Fixture Bath
	2 Fixture Bath
	Softener, Auto
	Softener, Manual
	Solar Water Heat
	No Plumbing
	Extra Toilet
	Extra Sink
	Separate Shower
	Ceramic Tile Floor
	Ceramic Tile Wains
	Ceramic Tub Alcove
	Vent Fan

(14) Water/Sewer

	Public Water
	Public Sewer
1	Water Well
1	1000 Gal Septic
	2000 Gal Septic

Lump Sum Items:

(15) Built-ins

	Appliance Allow.
	Cook Top
	Dishwasher
	Garbage Disposal
	Bath Heater
	Vent Fan
	Hot Tub
	Unvented Hood
	Vented Hood
	Intercom
	Jacuzzi Tub
	Jacuzzi repl.Tub
	Oven
	Microwave
	Standard Range
	Self Clean Range
	Sauna
	Trash Compactor
	Central Vacuum
	Security System

(15) Fireplaces

	Interior 1 Story
	Interior 2 Story
	2nd/Same Stack
	Two Sided
	Exterior 1 Story
	Exterior 2 Story
	Prefab 1 Story
	Prefab 2 Story
	Heat Circulator
	Raised Hearth
	Wood Stove
	Direct-Vented Gas

Class: D
Effec. Age: 49
Floor Area: 1,040
Total Base New : 121,947 E.C.F.
Total Depr Cost: 62,214 X 1.297
Estimated T.C.V: 80,692

(16) Porches/Decks

Area	Type
20	Treated Wood
24	Treated Wood

(17) Garage

Year Built:
Car Capacity:
Class:
Exterior:
Brick Ven.:
Stone Ven.:
Common Wall:
Foundation:
Finished ?:
Auto. Doors:
Mech. Doors:
Area:
% Good:
Storage Area:
No Conc. Floor:

Bsmnt Garage:

Carport Area:
Roof:

Cost Est. for Res. Bldg: 1 Single Family PLAIN Cls D Blt 0
(11) Heating System: Forced Air w/ Ducts
Ground Area = 1040 SF Floor Area = 1040 SF.
Phy/Ab.Phy/Func/Econ/Comb. % Good=51/100/100/100/51
Building Areas

Stories	Exterior	Foundation	Size	Cost New	Depr. Cost	
1 Story	Siding	Slab	1,040			
			Total:	109,792	55,993	
Other Additions/Adjustments						
Water/Sewer						
1000 Gal Septic			1	4,293	2,189	
Water Well, 100 Feet			1	5,545	2,828	
Deck						
Treated Wood			20	883	450	
Treated Wood			24	1,060	541	
Local Cost Items						
SHED #2			48	374	213	*5
			Totals:	121,947	62,214	

Notes:
ECF (RESIDENTIAL) 1.297 => TCV: 80,692

*** Information herein deemed reliable but not guaranteed***

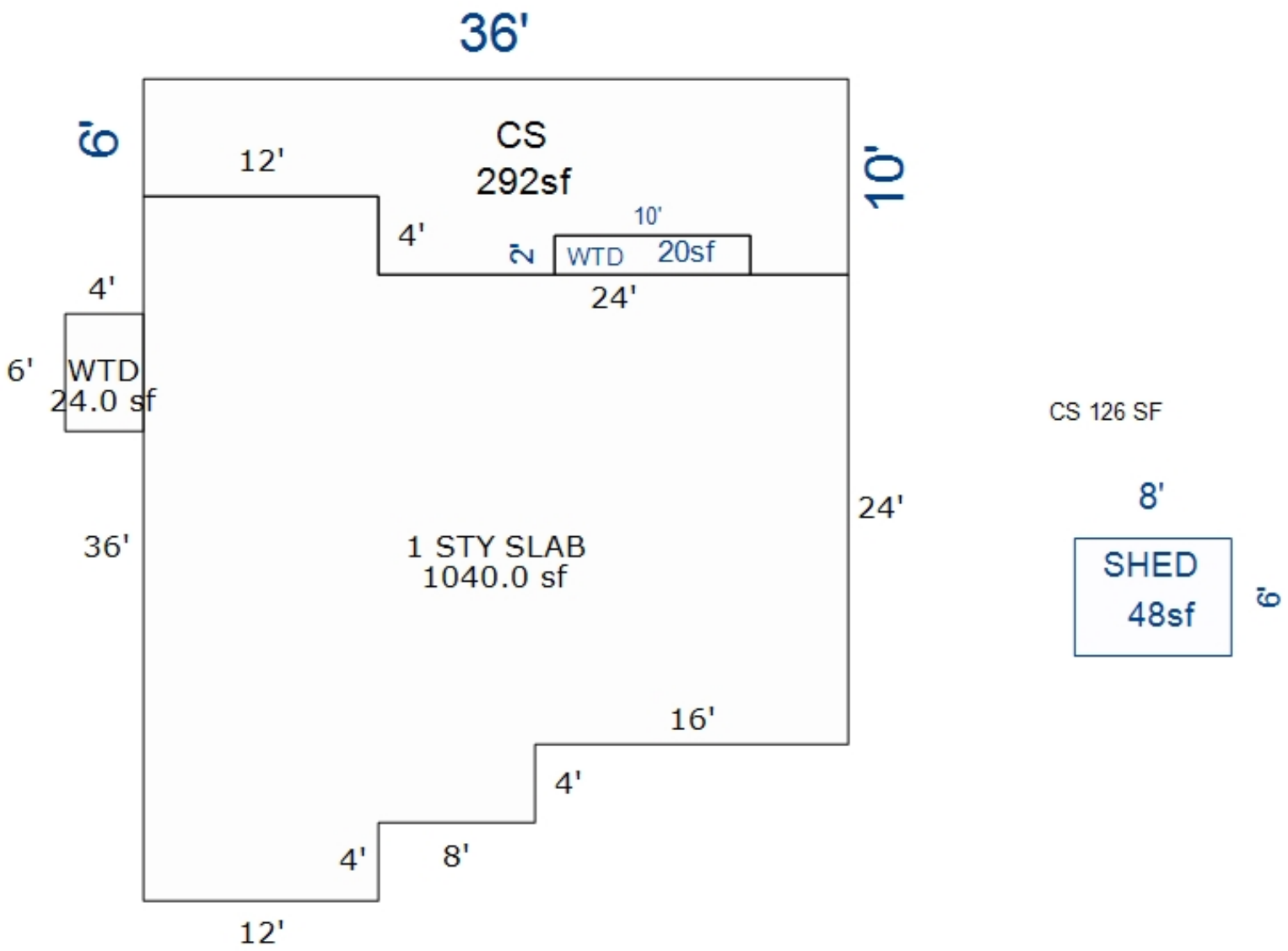

*** Information herein deemed reliable but not guaranteed***

Parcel Number: 2410-RETR-07 Jurisdiction: GREENWOOD TWP County: WEXFORD Printed on 02/15/2024

Grantor	Grantee	Sale Price	Sale Date	Inst. Type	Terms of Sale	Liber & Page	Verified By	Prcnt. Trans.
DUNBAR'S HARMONY HILLS	LAXTON, LARRY B.	0	04/20/2020	QC	21-NOT USED/OTHER	687 / 954	DEED	0.0
MAJDAN, RICHARD D.	LAXTON, LARRY B.	16,800	02/12/1993	WD	03-ARM'S LENGTH	343:703	DEED	0.0
DUNBAR, LEO A.	MAJDAN, RICHARD D.	5,500	12/14/1988	LC	03-ARM'S LENGTH	313:908	DEED	0.0

Property Address
3845 RIVERVIEW RD

Owner's Name/Address
LAXTON, LARRY B.
& SHERRY
3845 RIVERVIEW RD
MANTON MI 49663

Tax Description
LOTS 7 & 8 THE RETREAT GW. SEC. 10 T24N R10W -MANTON-

Comments/Influences

Class: RESIDENTIAL-IMPROV Zoning:
School: MANTON CONSOLIDATED SCHOOLS
P.R.E. 100% / /
:
2024 Est TCV 448,428 TCV/TFA: 241.61

Building Permit(s)	Date	Number	Status
RESIDENTIAL - REMODEL	08/30/2002	PB11153	
RESIDENTIAL - REMODEL	05/10/2002	PB10909	

X Improved | Vacant

	Public Improvements
	Dirt Road
X	Gravel Road
	Paved Road
	Storm Sewer
	Sidewalk
	Water
	Sewer
X	Electric
	Gas
	Curb
	Street Lights
	Standard Utilities
	Underground Utils.

	Topography of Site
	Level
X	Rolling
	Low
X	High
	Landscaped
	Swamp
X	Wooded
	Pond
	Waterfront
	Ravine
	Wetland
	Flood Plain
X	OPEN

Who When What
GLA 05/13/2021 INSPECTION

Land Value Estimates for Land Table 4010.LAND VALUES

Description	Frontage	Depth	* Factors * Front	Depth	Rate	%Adj.	Reason	Value
RET M R HIGH	195.00	0.00	1.0000	1.0000	315	100		61,425
195 Actual Front Feet, 0.00 Total Acres							Total Est. Land Value =	61,425

Land Improvement Cost Estimates

Description	Rate	Size	% Good	Cash Value
D/W/P: 3.5 Concrete	6.63	642	0	0
Total Estimated Land Improvements True Cash Value =				0

Year	Land Value	Building Value	Assessed Value	Board of Review	Tribunal/ Other	Taxable Value
2024	30,700	193,500	224,200			123,803C
2023	28,900	157,700	186,600			117,908C
2022	26,300	133,000	159,300			112,294C
2021	19,500	127,600	147,100			108,707C

The Equalizer. Copyright (c) 1999 - 2009. Licensed To: Township of Greenwood, County of Wexford, Michigan

*** Information herein deemed reliable but not guaranteed***

Building Type

X	Single Family
	Mobile Home
	Town Home
	Duplex
	A-Frame
X	Wood Frame

Building Style: PLAIN

Yr Built	Remodeled
2002	0

Condition: Good

Room List

	Basement
	1st Floor
	2nd Floor
	Bedrooms

(1) Exterior

	Wood/Shingle
X	Aluminum/Vinyl
	Brick
X	Insulation

(2) Windows

X	Many		Large
	Avg.	X	Avg.
	Few		Small

	Wood Sash
	Metal Sash
X	Vinyl Sash
	Double Hung
	Horiz. Slide
	Casement
	Double Glass
	Patio Doors
X	Storms & Screens

(3) Roof

X	Gable		Gambrel
	Hip		Mansard
	Flat		Shed
X	Asphalt Shingle		

Chimney:

(3) Roof (cont.)

	Eavestrough
X	Insulation
0	Front Overhang
0	Other Overhang

(4) Interior

X	Drywall		Plaster
	Paneled		Wood T&G

Trim & Decoration

	Ex	X	Ord		Min

Size of Closets

	Lg	X	Ord		Small

Doors:		Solid	X	H.C.	

(5) Floors

Kitchen:
Other: Linoleum
Other: Carpeted

(6) Ceilings

X	Drywall

(7) Excavation

Basement: 1856 S.F.
Crawl: 0 S.F.
Slab: 0 S.F.
Height to Joists: 0.0

(8) Basement

	Conc. Block
	Poured Conc.
	Stone
	Treated Wood
	Concrete Floor

(9) Basement Finish

	Recreation SF
	Living SF
	Walkout Doors (B)
	No Floor SF
	Walkout Doors (A)

(10) Floor Support

Joists:
Unsupported Len:
Cntr.Sup:

(11) Heating/Cooling

X	Gas		Oil		Elec.
	Wood		Coal		Steam

	Forced Air w/o Ducts
X	Forced Air w/ Ducts
	Forced Hot Water
	Electric Baseboard
	Elec. Ceil. Radiant
	Radiant (in-floor)
	Electric Wall Heat
	Space Heater
	Wall/Floor Furnace
	Forced Heat & Cool
	Heat Pump
	No Heating/Cooling
	Central Air
	Wood Furnace

(12) Electric

150	Amps Service

No./Qual. of Fixtures

	Ex.	X	Ord.		Min

No. of Elec. Outlets

	Many	X	Ave.		Few

(13) Plumbing

	Average Fixture(s)
2	3 Fixture Bath
	2 Fixture Bath
	Softener, Auto
	Softener, Manual
	Solar Water Heat
	No Plumbing
	Extra Toilet
	Extra Sink
	Separate Shower
	Ceramic Tile Floor
	Ceramic Tile Wains
	Ceramic Tub Alcove
	Vent Fan

(14) Water/Sewer

	Public Water
	Public Sewer
1	Water Well
1	1000 Gal Septic
	2000 Gal Septic

Lump Sum Items:

(15) Built-ins

	Appliance Allow.
	Cook Top
	Dishwasher
	Garbage Disposal
	Bath Heater
	Vent Fan
	Hot Tub
	Unvented Hood
	Vented Hood
	Intercom
	Jacuzzi Tub
	Jacuzzi repl.Tub
	Oven
	Microwave
	Standard Range
	Self Clean Range
	Sauna
	Trash Compactor
	Central Vacuum
	Security System

(15) Fireplaces

	Interior 1 Story
	Interior 2 Story
	2nd/Same Stack
	Two Sided
	Exterior 1 Story
	Exterior 2 Story
	Prefab 1 Story
	Prefab 2 Story
	Heat Circulator
	Raised Hearth
	Wood Stove
	Direct-Vented Gas

Class: C
Effec. Age: 22
Floor Area: 1,856
Total Base New : 382,543 E.C.F.
Total Depr Cost: 298,383 X 1.297
Estimated T.C.V: 387,003

(16) Porches/Decks

Area	Type
144	WPP
144	WPP
90	WPP
252	WCP (1 Story)
458	Treated Wood
144	Treated Wood
144	Treated Wood

(17) Garage

Year Built:
Car Capacity:
Class: C
Exterior: Pole
Brick Ven.: 0
Stone Ven.: 0
Common Wall: Detache
Foundation: 18 Inch
Finished ?:
Auto. Doors: 0
Mech. Doors: 0
Area: 2560
% Good: 0
Storage Area: 0
No Conc. Floor: 0

Bsmnt Garage:

Carport Area:
Roof:

Cost Est. for Res. Bldg: 1 Single Family PLAIN Cls C Blt 2002
(11) Heating System: Forced Air w/ Ducts
Ground Area = 1856 SF Floor Area = 1856 SF.
Phy/Ab.Phy/Func/Econ/Comb. % Good=78/100/100/100/78
Building Areas

Stories	Exterior	Foundation	Size	Cost New	Depr. Cost
1+ Story	Siding	Basement	1,856		
			Total:	271,412	211,702
Other Additions/Adjustments					
Plumbing					
3 Fixture Bath			1	4,678	3,649
Water/Sewer					
1000 Gal Septic			1	4,899	3,821
Water Well, 100 Feet			1	5,849	4,562
Porches					
WPP			144	3,779	2,948
WPP			144	3,779	2,948
WPP			90	2,822	2,201
WCP (1 Story)			252	9,216	7,188
Deck					
Treated Wood			458	7,177	5,598
Treated Wood			144	3,362	2,622
Treated Wood			144	3,362	2,622
Garages					
Class: C Exterior: Pole (Unfinished)					
Base Cost			2560	62,208	48,522
			Totals:	382,543	298,383

Notes:
ECF (RESIDENTIAL) 1.297 => TCV: 387,003

*** Information herein deemed reliable but not guaranteed***

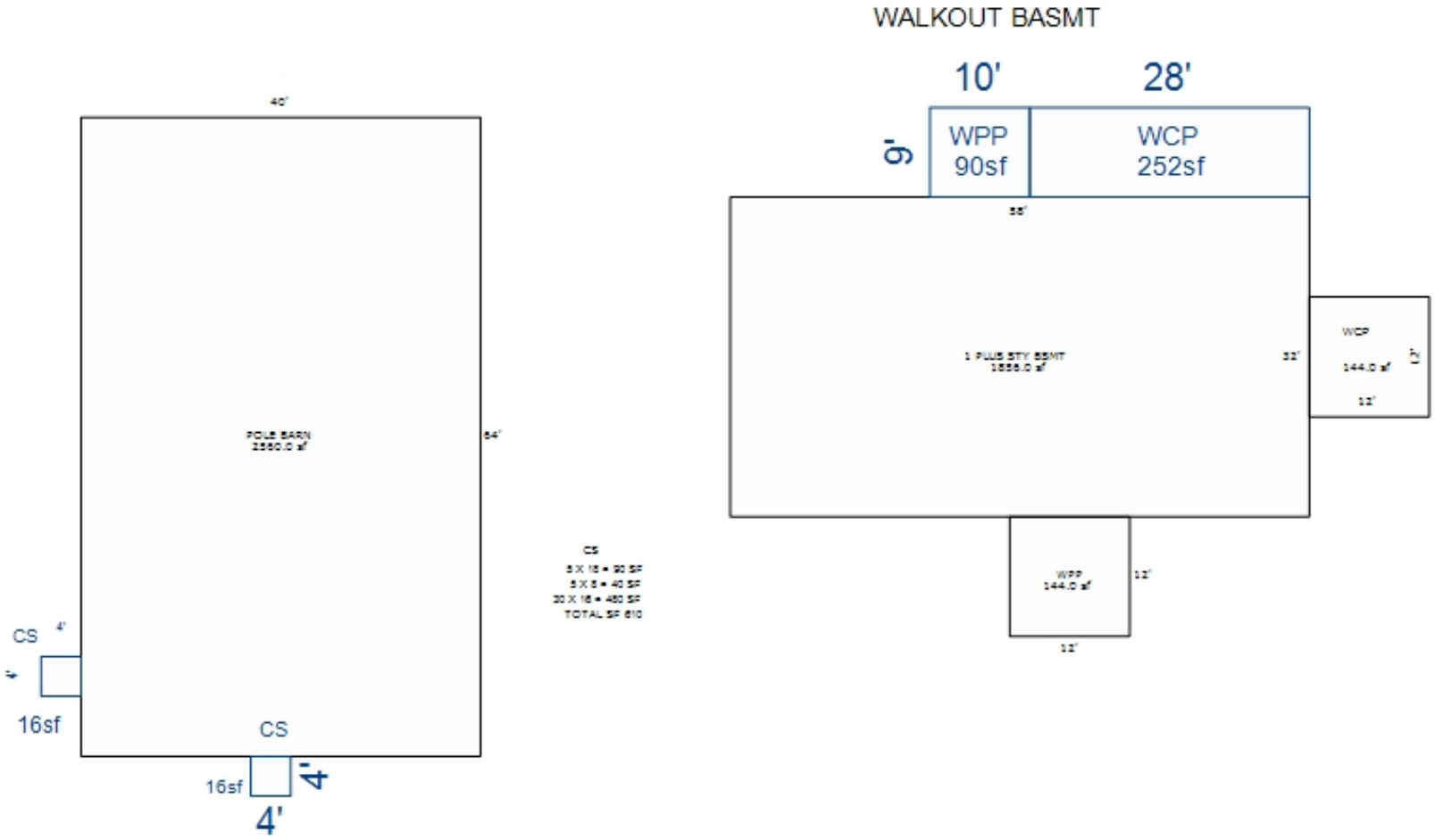

*** Information herein deemed reliable but not guaranteed***

Parcel Number: 2410-RETR-10 Jurisdiction: GREENWOOD TWP County: WEXFORD Printed on 02/15/2024

Grantor	Grantee	Sale Price	Sale Date	Inst. Type	Terms of Sale	Liber & Page	Verified By	Prcnt. Trans.
SMITH, ROBERT J.& BONNIE J	WEIBENGA, WILLIAM A & ANN	23,000	07/08/2014	QC	03-ARM'S LENGTH	669/1045	DEED	100.0
DURANT, ROBERT F.	SMITH, ROBERT & BONNIE	12,000	05/26/1995	WD	03-ARM'S LENGTH	344:252	DEED	0.0
MAJDAN, RICHARD D.	DURANT, ROBERT F.	10,000	06/02/1989	WD	03-ARM'S LENGTH	315:854	DEED	0.0

Property Address

3803 RIVERVIEW RD

Owner's Name/Address

WEIBENGA, WILLIAM A & ANN M
3803 RIVERVIEW RD
MANTON MI 49663

Tax Description

LOT 10 & LOT 09 THE RETREAT GW. SEC. 10 T24N R10W -MANTON-

Comments/Influences

Class: RESIDENTIAL-IMPROV Zoning:

School: MANTON CONSOLIDATED SCHOOLS

P.R.E. 100% 03/10/2020

:

2024 Est TCV 370,634 TCV/TFA: 343.18

Building Permit(s)	Date	Number	Status
Garage, Detached	08/19/2019	PB19-0180	COMPLETE
Foundation	06/28/2019	PB19-0120	COMPLETE

X	Improved		Vacant

	Public Improvements
	Dirt Road
X	Gravel Road
	Paved Road
	Storm Sewer
	Sidewalk
	Water
	Sewer
X	Electric
	Gas
	Curb
	Street Lights
	Standard Utilities
	Underground Utils.

	Topography of Site
	Level
X	Rolling
	Low
X	High
	Landscaped
	Swamp
X	Wooded
	Pond
	Waterfront
	Ravine
	Wetland
	Flood Plain
X	OPEN

Who	When	What
GLA	05/13/2021	INSPECTION

Land Value Estimates for Land Table 4010.LAND VALUES

Description	Frontage	Depth	* Factors * Front	Depth	Rate	%Adj.	Reason	Value
RET M R HIGH	160.00	0.00	1.0000	1.0000	315	100		50,400
160 Actual Front Feet, 0.00 Total Acres							Total Est. Land Value =	50,400

Year	Land Value	Building Value	Assessed Value	Board of Review	Tribunal/ Other	Taxable Value
2024	25,200	160,100	185,300			140,661C
2023	23,700	130,300	154,000			133,963C
2022	21,600	109,600	131,200			127,584C
2021	16,000	110,600	126,600			123,509C

The Equalizer. Copyright (c) 1999 - 2009.
Licensed To: Township of Greenwood, County of Wexford, Michigan

*** Information herein deemed reliable but not guaranteed***

Building Type

X	Single Family
	Mobile Home
	Town Home
	Duplex
	A-Frame
X	Wood Frame

Building Style: PLAIN

Yr Built	Remodeled
2019	0

Condition: Good

Room List

	Basement
	1st Floor
	2nd Floor
	Bedrooms

(1) Exterior

X	Wood/Shingle
	Aluminum/Vinyl
	Brick
X	Insulation

(2) Windows

X	Many Avg. Few	X	Large Avg. Small

	Wood Sash
	Metal Sash
X	Vinyl Sash
	Double Hung
	Horiz. Slide
	Casement
	Double Glass
	Patio Doors
X	Storms & Screens

(3) Roof

X	Gable		Gambrel
	Hip		Mansard
	Flat		Shed

X	Asphalt Shingle

Chimney:

(3) Roof (cont.)

	Eavestrough
X	Insulation
0	Front Overhang
0	Other Overhang

(4) Interior

X	Drywall Paneled		Plaster Wood T&G

Trim & Decoration

	Ex	X	Ord		Min

Size of Closets

	Lg	X	Ord		Small

Doors:		Solid	X	H.C.	

(5) Floors

Kitchen:
Other: Linoleum
Other: Carpeted

(6) Ceilings

X	Drywall

(7) Excavation

Basement: 1080 S.F.
Crawl: 0 S.F.
Slab: 0 S.F.
Height to Joists: 0.0

(8) Basement

	Conc. Block
	Poured Conc.
	Stone
	Treated Wood
	Concrete Floor

(9) Basement Finish

	Recreation	SF
936	Living	SF
	Walkout Doors	(B)
	No Floor	SF
	Walkout Doors	(A)

(10) Floor Support

Joists:
Unsupported Len:
Cntr.Sup:

(11) Heating/Cooling

X	Gas		Oil		Elec.
	Wood		Coal		Steam

	Forced Air w/o Ducts
X	Forced Air w/ Ducts
	Forced Hot Water
	Electric Baseboard
	Elec. Ceil. Radiant
	Radiant (in-floor)
	Electric Wall Heat
	Space Heater
	Wall/Floor Furnace
	Forced Heat & Cool
	Heat Pump
	No Heating/Cooling

	Central Air
	Wood Furnace

(12) Electric

150	Amps Service

No./Qual. of Fixtures

	Ex.	X	Ord.		Min

No. of Elec. Outlets

	Many	X	Ave.		Few

(13) Plumbing

2	Average Fixture(s)
	3 Fixture Bath
	2 Fixture Bath
	Softener, Auto
	Softener, Manual
	Solar Water Heat
	No Plumbing
	Extra Toilet
	Extra Sink
	Separate Shower
	Ceramic Tile Floor
	Ceramic Tile Wains
	Ceramic Tub Alcove
	Vent Fan

(14) Water/Sewer

	Public Water
	Public Sewer
1	Water Well
1	1000 Gal Septic
	2000 Gal Septic

Lump Sum Items:

(15) Built-ins

	Appliance Allow.
	Cook Top
	Dishwasher
	Garbage Disposal
	Bath Heater
	Vent Fan
	Hot Tub
	Unvented Hood
	Vented Hood
	Intercom
	Jacuzzi Tub
	Jacuzzi repl.Tub
	Oven
	Microwave
	Standard Range
	Self Clean Range
	Sauna
	Trash Compactor
	Central Vacuum
	Security System

(15) Fireplaces

	Interior 1 Story
	Interior 2 Story
	2nd/Same Stack
	Two Sided
	Exterior 1 Story
	Exterior 2 Story
	Prefab 1 Story
	Prefab 2 Story
	Heat Circulator
	Raised Hearth
	Wood Stove
	Direct-Vented Gas

Class: C
Effec. Age: 5
Floor Area: 1,080
Total Base New : 259,900 E.C.F.
Total Depr Cost: 246,904 X 1.297
Estimated T.C.V: 320,234

(16) Porches/Decks

Area	Type
372	WPP
308	4in Concrete
240	Treated Wood
64	Brzwy, FW

(17) Garage

Year Built:
Car Capacity:
Class: C
Exterior: Siding
Brick Ven.: 0
Stone Ven.: 0
Common Wall: 1 Wall
Foundation: 42 Inch
Finished ?:
Auto. Doors: 0
Mech. Doors: 0
Area: 768
% Good: 0
Storage Area: 0
No Conc. Floor: 0

Bsmnt Garage:

Carport Area:
Roof:

Cost Est. for Res. Bldg: 1 Single Family PLAIN Cls C Blt 2019
(11) Heating System: Forced Air w/ Ducts
Ground Area = 1080 SF Floor Area = 1080 SF.
Phy/Ab.Phy/Func/Econ/Comb. % Good=95/100/100/100/95
Building Areas

Stories	Exterior	Foundation	Size	Cost New	Depr. Cost
1 Story	Siding	Basement	1,080		
			Total:	163,879	155,684
Other Additions/Adjustments					
Basement Living Area			936	33,799	32,109
Plumbing					
3 Fixture Bath			1	4,678	4,444
Water/Sewer					
1000 Gal Septic			1	4,899	4,654
Water Well, 100 Feet			1	5,849	5,557
Porches					
WPP			372	6,305	5,990
4in Concrete			308	2,538	2,411
Deck					
Treated Wood			240	4,704	4,469
Garages					
Class: C Exterior: Siding Foundation: 42 Inch (Unfinished)					
Base Cost			768	30,520	28,994
Common Wall: 1 Wall			1	-2,705	-2,570
Breezeways					
Frame Wall			64	4,436	4,214
Local Cost Items					
SHED			128	998	948
			Totals:	259,900	246,904

Notes:

ECF (RESIDENTIAL) 1.297 => TCV: 320,234

*** Information herein deemed reliable but not guaranteed***

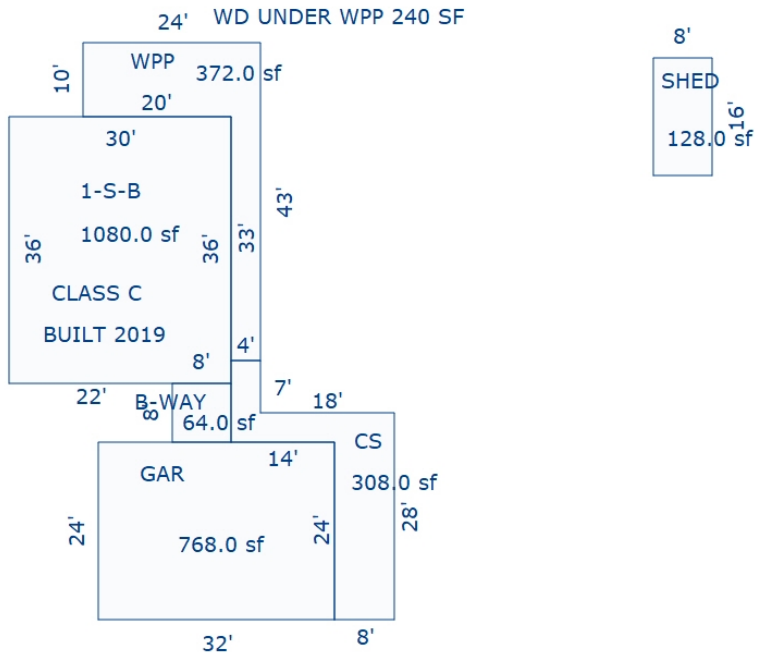

Sketch by Apex Sketch

*** Information herein deemed reliable but not guaranteed***

Parcel Number: 2410-RETR-11-01 Jurisdiction: GREENWOOD TWP County: WEXFORD Printed on 02/15/2024

Grantor	Grantee	Sale Price	Sale Date	Inst. Type	Terms of Sale	Liber & Page	Verified By	Prcnt. Trans.
ROBSON MICHELLE L		0	12/19/2023	OTH	07-DEATH CERTIFICATE		OTHER	100.0
TERRELL, JEFFERY H.	ROBSON MICHELLE L	85,000	11/20/2015	WD	03-ARM'S LENGTH	PTA	DEED	100.0
TERRELL, JEFFERY H.	ROBSON MICHELLE L	85,000	11/20/2015	WD	03-ARM'S LENGTH	PTA	DEED	100.0

Property Address
3793 RIVERVIEW RD

Owner's Name/Address
ROBSON MICHELLE L
3793 RIVERVIEW RD
MESICK MI 49668

Tax Description
LOT 11 AND THE E 1/2 OF LOT 12 TOG W/EASMT (336-964-93) THE RETREAT GW. SEC. 10 T24N R10W -MANTON- SPLIT ON 01/23/2016 INTO 2410-RETR-11-01;

Comments/Influences
Split/Comb. on 01/23/2016 completed 01/23/2016 BSA ;
Parent Parcel(s): 2410-RETR-11;
Child Parcel(s): 2410-RETR-11-01;

The Equalizer. Copyright (c) 1999 - 2009.
Licensed To: Township of Greenwood, County of Wexford, Michigan

Class: RESIDENTIAL-IMPROV Zoning:
School: MANTON CONSOLIDATED SCHOOLS
P.R.E. 0%
:
2024 Est TCV 160,078 TCV/TFA: 145.00

Building Permit(s)	Date	Number	Status
Pole Barn	08/22/2023	PB23-0221	COMPLETE
Res. Add/Alter/Repair	07/20/2017	PB17-0141	ENTERED

X Improved | Vacant

Public Improvements
Dirt Road
Gravel Road
Paved Road
Storm Sewer
Sidewalk
Water
Sewer
Electric
Gas
Curb
Street Lights
Standard Utilities
Underground Utils.

Topography of Site
Level
Rolling
Low
High
Landscaped
Swamp
Wooded
Pond
Waterfront
Ravine
Wetland
Flood Plain

Who	When	What
JB	10/23/2023	INSPECTION
GLA	05/13/2021	INSPECTION

Land Value Estimates for Land Table 4010.LAND VALUES

Description	Frontage	Depth	* Factors * Front	Depth	Rate	%Adj.	Reason	Value
RET M R HIGH	150.00	0.00	1.0000	1.0000	315	100		47,250
150 Actual Front Feet, 0.00 Total Acres							Total Est. Land Value =	47,250

Land Improvement Cost Estimates

Description	Rate	Size	% Good	Cash Value
D/W/P: 3.5 Concrete	5.82	462	45	1,210
D/W/P: 3.5 Concrete	5.82	90	45	236
Total Estimated Land Improvements True Cash Value =				1,446

Year	Land Value	Building Value	Assessed Value	Board of Review	Tribunal/ Other	Taxable Value
2024	23,600	56,400	80,000			80,000S
2023	22,200	38,100	60,300			47,821C
2022	17,600	32,300	49,900			45,544C
2021	19,500	31,800	51,300			44,090C

*** Information herein deemed reliable but not guaranteed***

Building Type

X	Single Family
	Mobile Home
	Town Home
	Duplex
	A-Frame
X	Wood Frame

Building Style: PLAIN

Yr Built	Remodeled
0	0

Condition: Good

Room List

	Basement
	1st Floor
	2nd Floor
	Bedrooms

(1) Exterior

	Wood/Shingle
X	Aluminum/Vinyl
	Brick
X	Insulation

(2) Windows

X	Many Avg. Few	X	Large Avg. Small

	Wood Sash
	Metal Sash
X	Vinyl Sash
	Double Hung
	Horiz. Slide
	Casement
	Double Glass
	Patio Doors
X	Storms & Screens

(3) Roof

X	Gable		Gambrel
	Hip		Mansard
	Flat		Shed

X	Asphalt Shingle

Chimney:

(3) Roof (cont.)

	Eavestrough
X	Insulation
0	Front Overhang
0	Other Overhang

(4) Interior

X	Drywall		Plaster
	Paneled		Wood T&G

Trim & Decoration

	Ex	X	Ord		Min

Size of Closets

	Lg	X	Ord		Small

Doors:		Solid	X	H.C.	

(5) Floors

Kitchen:
Other: Linoleum
Other: Carpeted

(6) Ceilings

X	Drywall

(7) Excavation

Basement: 0 S.F.
Crawl: 0 S.F.
Slab: 1104 S.F.
Height to Joists: 0.0

(8) Basement

	Conc. Block
	Poured Conc.
	Stone
	Treated Wood
	Concrete Floor

(9) Basement Finish

	Recreation SF
	Living SF
	Walkout Doors (B)
	No Floor SF
	Walkout Doors (A)

(10) Floor Support

Joists:
Unsupported Len:
Cntr.Sup:

(11) Heating/Cooling

X	Gas		Oil		Elec.
	Wood		Coal		Steam

	Forced Air w/o Ducts
X	Forced Air w/ Ducts
	Forced Hot Water
	Electric Baseboard
	Elec. Ceil. Radiant
	Radiant (in-floor)
	Electric Wall Heat
	Space Heater
	Wall/Floor Furnace
	Forced Heat & Cool
	Heat Pump
	No Heating/Cooling

	Central Air
	Wood Furnace

(12) Electric

150	Amps Service

No./Qual. of Fixtures

	Ex.	X	Ord.		Min

No. of Elec. Outlets

	Many	X	Ave.		Few

(13) Plumbing

	Average Fixture(s)
1	3 Fixture Bath
	2 Fixture Bath
	Softener, Auto
	Softener, Manual
	Solar Water Heat
	No Plumbing
	Extra Toilet
	Extra Sink
	Separate Shower
	Ceramic Tile Floor
	Ceramic Tile Wains
	Ceramic Tub Alcove
	Vent Fan

(14) Water/Sewer

	Public Water
	Public Sewer
1	Water Well
1	1000 Gal Septic
	2000 Gal Septic

Lump Sum Items:

(15) Built-ins

	Appliance Allow.
	Cook Top
	Dishwasher
	Garbage Disposal
	Bath Heater
	Vent Fan
	Hot Tub
	Unvented Hood
	Vented Hood
	Intercom
	Jacuzzi Tub
	Jacuzzi repl.Tub
	Oven
	Microwave
	Standard Range
	Self Clean Range
	Sauna
	Trash Compactor
	Central Vacuum
	Security System

(15) Fireplaces

	Interior 1 Story
	Interior 2 Story
	2nd/Same Stack
	Two Sided
1	Exterior 1 Story
	Exterior 2 Story
	Prefab 1 Story
	Prefab 2 Story
	Heat Circulator
	Raised Hearth
	Wood Stove
	Direct-Vented Gas

Class: D
Effec. Age: 49
Floor Area: 1,104
Total Base New : 154,411 E.C.F.
Total Depr Cost: 85,877 X 1.297
Estimated T.C.V: 111,382

(16) Porches/Decks

Area	Type
90	CCP (1 Story)
180	Treated Wood

(17) Garage

Year Built: 2023
Car Capacity:
Class: D
Exterior: Pole
Brick Ven.: 0
Stone Ven.: 0
Common Wall: Detache
Foundation: 18 Inch
Finished ?:
Auto. Doors: 0
Mech. Doors: 0
Area: 672
% Good: 100
Storage Area: 0
No Conc. Floor: 0

Bsmnt Garage:

Carport Area:
Roof:

Cost Est. for Res. Bldg: 1 Single Family PLAIN Cls D Blt 0
(11) Heating System: Forced Air w/ Ducts
Ground Area = 1104 SF Floor Area = 1104 SF.
Phy/Ab.Phy/Func/Econ/Comb. % Good=51/100/100/100/51
Building Areas

Stories	Exterior	Foundation	Size	Cost New	Depr. Cost	
1+ Story	Siding	Slab	744			
1 Story	Siding	Slab	360			
			Total:	118,853	60,614	
Other Additions/Adjustments						
Water/Sewer						
1000 Gal Septic			1	4,293	2,189	
Water Well, 100 Feet			1	5,545	2,828	
Porches						
CCP (1 Story)			90	2,165	1,104	
Deck						
Treated Wood			180	3,721	1,898	
Garages						
Class: D Exterior: Pole (Unfinished)						
Base Cost			672	14,549	14,549	*1
Fireplaces						
Exterior 1 Story			1	5,004	2,552	
Local Cost Items						
SHED			36	281	143	
			Totals:	154,411	85,877	

Notes:

ECF (RESIDENTIAL) 1.297 => TCV: 111,382

*** Information herein deemed reliable but not guaranteed***

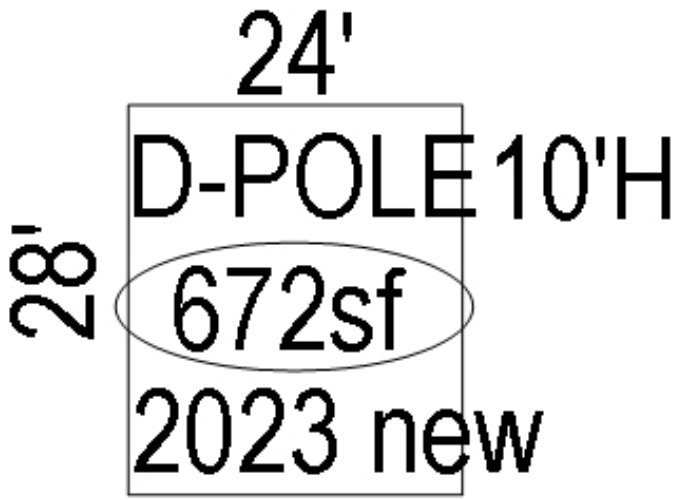

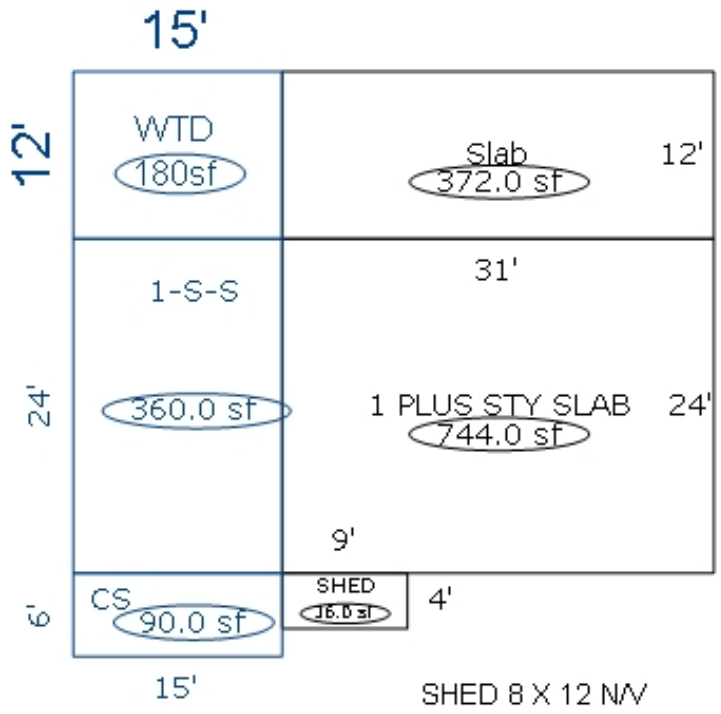

*** Information herein deemed reliable but not guaranteed***

Parcel Number: 2410-RETR-13 Jurisdiction: GREENWOOD TWP County: WEXFORD Printed on 02/15/2024

Grantor	Grantee	Sale Price	Sale Date	Inst. Type	Terms of Sale	Liber & Page	Verified By	Prcnt. Trans.
WADDELL, JOHN S		0	08/27/2023	OTH	07-DEATH CERTIFICATE	GTC DEATHLIST		100.0
STRATHMANN, ROBERT J	WADDELL, JOHN S	224,000	07/30/2021	WD	03-ARM'S LENGTH	690/2245	DEED	100.0
FEDERAL HOME LOAN MORTGAGE	STRATHMANN, ROBERT J	91,000	08/26/2011	WD	11-FROM LENDING INSTITUTI	641/2980	DEED	100.0
WADDELL, JOHN S & LAMONTA	FEDERAL HOME LOAN MORTGAGE	158,000	06/18/2010	SD	10-FORECLOSURE	631/140	DEED	0.0

Property Address

3761 RIVERVIEW RD

Owner's Name/Address

WADDELL, JOHN S
3761 RIVERVIEW RD
MANTON MI 49663

Tax Description

LOT 13 & W 1/2 OF LOT 12 SUBJ TO EASEMT (336-964-93) THE RETREAT GW. SEC. 10 T24N R10W -MANTON-

Comments/Influences

Class: RESIDENTIAL-IMPROV Zoning:

School: MANTON CONSOLIDATED SCHOOLS

P.R.E. 0%

:

2024 Est TCV 226,815 TCV/TFA: 71.51

Building Permit(s)	Date	Number	Status
RESIDENTIAL - REMODEL	05/09/2001	PB10249	

X Improved | Vacant

Public Improvements

- Dirt Road
- X Gravel Road
- Paved Road
- Storm Sewer
- Sidewalk
- Water
- Sewer
- X Electric
- Gas
- Curb
- Street Lights
- Standard Utilities
- Underground Utils.

Topography of Site

- Level
- X Rolling
- Low
- X High
- Landscaped
- Swamp
- X Wooded
- Pond
- Waterfront
- Ravine
- Wetland
- Flood Plain
- X OPEN

Who When What

GLA 10/31/2022 INSPECTION

Land Value Estimates for Land Table 4010.LAND VALUES

Description	Frontage	Depth	* Factors * Front	Depth	Rate	%Adj.	Reason	Value
RET M R HIGH	130.00	0.00	1.0000	1.0000	315	100		40,950
130 Actual Front Feet, 0.00 Total Acres							Total Est. Land Value =	40,950

Land Improvement Cost Estimates

Description	Rate	Size	% Good	Cash Value
D/W/P: 3.5 Concrete	5.82	680	59	2,335
Wood Frame	23.57	96	59	1,335
Total Estimated Land Improvements True Cash Value =				3,670

Year	Land Value	Building Value	Assessed Value	Board of Review	Tribunal/ Other	Taxable Value
2024	20,500	92,900	113,400			113,400S
2023	19,200	75,100	94,300			69,825C
2022	17,600	48,900	66,500			66,500S
2021	13,000	49,800	62,800			50,442C

The Equalizer. Copyright (c) 1999 - 2009. Licensed To: Township of Greenwood, County of Wexford, Michigan

*** Information herein deemed reliable but not guaranteed***

Building Type

X	Single Family
	Mobile Home
	Town Home
	Duplex
	A-Frame
X	Wood Frame

Building Style: PLAIN

Yr Built	Remodeled
0	0

Condition: Good

Room List

	Basement
	1st Floor
	2nd Floor
	Bedrooms

(1) Exterior

X	Wood/Shingle
	Aluminum/Vinyl
	Brick
X	Insulation

(2) Windows

X	Many Avg. Few	X	Large Avg. Small

	Wood Sash
	Metal Sash
X	Vinyl Sash
	Double Hung
	Horiz. Slide
	Casement
	Double Glass
	Patio Doors
X	Storms & Screens

(3) Roof

X	Gable		Gambrel
	Hip		Mansard
	Flat		Shed

X	Asphalt Shingle

Chimney:

(3) Roof (cont.)

	Eavestrough
X	Insulation
0	Front Overhang
0	Other Overhang

(4) Interior

X	Drywall		Plaster
	Paneled		Wood T&G

Trim & Decoration

	Ex	X	Ord		Min

Size of Closets

	Lg	X	Ord		Small

Doors:		Solid	X	H.C.	

(5) Floors

Kitchen:
Other: Linoleum
Other: Carpeted

(6) Ceilings

X	Drywall

(7) Excavation

Basement: 0 S.F.
Crawl: 1344 S.F.
Slab: 84 S.F.
Height to Joists: 0.0

(8) Basement

	Conc. Block
	Poured Conc.
	Stone
	Treated Wood
	Concrete Floor

(9) Basement Finish

	Recreation SF
	Living SF
	Walkout Doors (B)
	No Floor SF
	Walkout Doors (A)

(10) Floor Support

Joists:
Unsupported Len:
Cntr.Sup:

(11) Heating/Cooling

X	Gas		Oil		Elec.
	Wood		Coal		Steam

	Forced Air w/o Ducts
X	Forced Air w/ Ducts
	Forced Hot Water
	Electric Baseboard
	Elec. Ceil. Radiant
	Radiant (in-floor)
	Electric Wall Heat
	Space Heater
	Wall/Floor Furnace
	Forced Heat & Cool
	Heat Pump
	No Heating/Cooling

	Central Air
	Wood Furnace

(12) Electric

150	Amps Service

No./Qual. of Fixtures

	Ex.	X	Ord.		Min

No. of Elec. Outlets

	Many	X	Ave.		Few

(13) Plumbing

	Average Fixture(s)
1	3 Fixture Bath
	2 Fixture Bath
	Softener, Auto
	Softener, Manual
	Solar Water Heat
	No Plumbing
	Extra Toilet
	Extra Sink
	Separate Shower
	Ceramic Tile Floor
	Ceramic Tile Wains
	Ceramic Tub Alcove
	Vent Fan

(14) Water/Sewer

	Public Water
	Public Sewer
1	Water Well
1	1000 Gal Septic
	2000 Gal Septic

Lump Sum Items:

(15) Built-ins

	Appliance Allow.
	Cook Top
	Dishwasher
	Garbage Disposal
	Bath Heater
	Vent Fan
	Hot Tub
	Unvented Hood
	Vented Hood
	Intercom
	Jacuzzi Tub
	Jacuzzi repl.Tub
	Oven
	Microwave
	Standard Range
	Self Clean Range
	Sauna
	Trash Compactor
	Central Vacuum
	Security System

(15) Fireplaces

	Interior 1 Story
	Interior 2 Story
	2nd/Same Stack
	Two Sided
	Exterior 1 Story
	Exterior 2 Story
	Prefab 1 Story
	Prefab 2 Story
	Heat Circulator
	Raised Hearth
	Wood Stove
	Direct-Vented Gas

Class: D
Effec. Age: 56
Floor Area: 3,172
Total Base New : 312,164 E.C.F.
Total Depr Cost: 140,474 X 1.297
Estimated T.C.V: 182,195

(16) Porches/Decks

Area	Type

(17) Garage

Year Built:
Car Capacity:
Class: D
Exterior: Siding
Brick Ven.: 0
Stone Ven.: 0
Common Wall: Detache
Foundation: 42 Inch
Finished ?:
Auto. Doors: 0
Mech. Doors: 0
Area: 1120
% Good: 0
Storage Area: 400
No Conc. Floor: 0

Bsmnt Garage:

Carport Area:
Roof:

Cost Est. for Res. Bldg: 1 Single Family PLAIN Cls D Blt 0
(11) Heating System: Forced Air w/ Ducts
Ground Area = 1828 SF Floor Area = 3172 SF.
Phy/Ab.Phy/Func/Econ/Comb. % Good=45/100/100/100/45
Building Areas

Stories	Exterior	Foundation	Size	Cost New	Depr. Cost
2 Story	Siding	Crawl Space	1,344		
1 Story	Siding	Slab	84		
1 Story	Siding	Overhang	400		
			Total:	265,873	119,643

Other Additions/Adjustments

Water/Sewer			
1000 Gal Septic	1	4,293	1,932
Water Well, 100 Feet	1	5,545	2,495
Garages			
Class: D Exterior: Siding Foundation: 42 Inch (Unfinished)			
Storage Over Garage	400	4,264	1,919
Base Cost	1120	32,189	14,485
	Totals:	312,164	140,474

Notes:
ECF (RESIDENTIAL) 1.297 => TCV: 182,195

*** Information herein deemed reliable but not guaranteed***

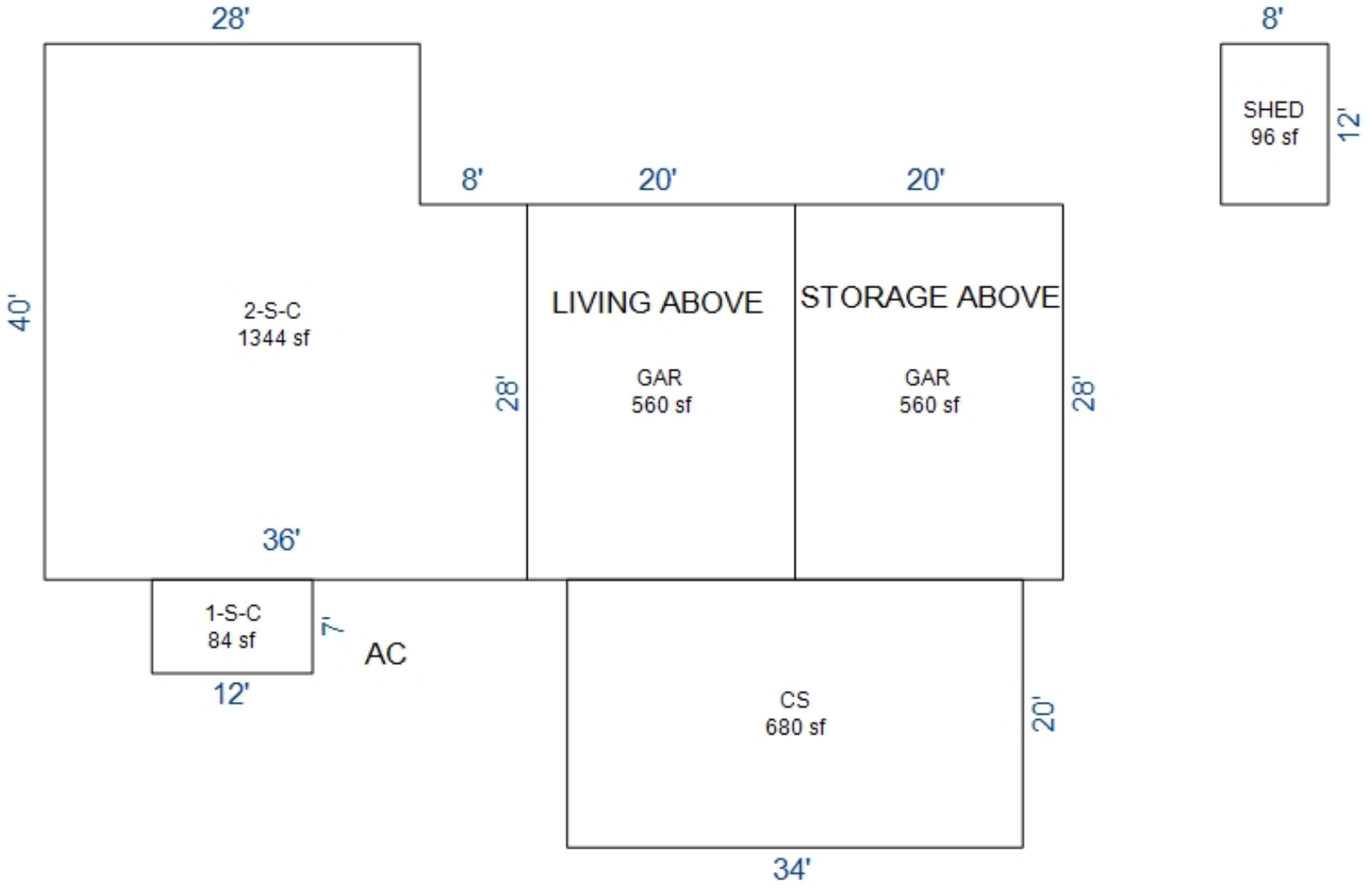

*** Information herein deemed reliable but not guaranteed***

Parcel Number: 2410-RETR-14 Jurisdiction: GREENWOOD TWP County: WEXFORD Printed on 02/15/2024

Grantor	Grantee	Sale Price	Sale Date	Inst. Type	Terms of Sale	Liber & Page	Verified By	Prcnt. Trans.
FRAGALE, ROBERT L	FRAGALE, ROBERT L	0	08/02/2023	QC	21-NOT USED/OTHER	695/2558	PROPERTY TRANSFER	0.0
DUNBAR, LEO & BETTY	FRAGALE, ROBERT & J LIPSC(	12,000	01/10/2000	WD	08-ESTATE	377:250	DEED	0.0
DUNBAR, LEO A.	FRAGALE ET AL, MARY E.	12,000	07/21/1990	LC	03-ARM'S LENGTH	321:288	DEED	0.0

Property Address

3697 RIVERVIEW RD

Owner's Name/Address

FRAGALE, ROBERT L
LIPSCOMB JAMES A & JANICE M & JAMES
7729 TREE SWALLOW DR SE
GRAND RAPIDS MI 49508

Tax Description

LOTS 14,15,16,17,18,19,20,23,24,25 THE RETREAT GW. SEC. 10 T24N R10W -MANTON-

Comments/Influences

Class: RESIDENTIAL-IMPROV Zoning:

School: MANTON CONSOLIDATED SCHOOLS

P.R.E. 0%

:

2024 Est TCV 213,051 TCV/TFA: 0.00

Building Permit(s)	Date	Number	Status

X	Improved		Vacant

	Public Improvements
	Dirt Road
X	Gravel Road
	Paved Road
	Storm Sewer
	Sidewalk
	Water
	Sewer
X	Electric
	Gas
	Curb
	Street Lights
	Standard Utilities
	Underground Utils.

	Topography of Site
	Level
X	Rolling
	Low
X	High
	Landscaped
	Swamp
X	Wooded
	Pond
	Waterfront
	Ravine
	Wetland
	Flood Plain
X	OPEN

Who	When	What
GLA	05/13/2021	INSPECTION
GLA	08/07/2014	INSPECTION

Land Value Estimates for Land Table 4010.LAND VALUES

Description	Frontage	Depth	* Factors * Front	Depth	Rate	%Adj.	Reason	Value
RET M R HIGH	526.00	0.00	1.0000	1.0000	315	70	EXCESS FRONTAGE	115,983
RETREAT-OFF WAT	223.00	0.00	1.0000	1.0000	233	100		51,959
749 Actual Front Feet, 0.00 Total Acres							Total Est. Land Value =	167,942

Land Improvement Cost Estimates

Description	Rate	Size	% Good	Cash Value
D/W/P: 3.5 Concrete	6.63	16	68	72
Wood Frame	26.52	160	42	1,782
Total Estimated Land Improvements True Cash Value =				1,854

Year	Land Value	Building Value	Assessed Value	Board of Review	Tribunal/ Other	Taxable Value
2024	84,000	22,500	106,500			30,658C
2023	70,100	18,500	88,600			29,199C
2022	73,400	15,700	89,100			27,809C
2021	55,900	15,600	71,500			26,921C

The Equalizer. Copyright (c) 1999 - 2009.
Licensed To: Township of Greenwood, County of Wexford, Michigan

*** Information herein deemed reliable but not guaranteed***

Building Type

X	Single Family
	Mobile Home
	Town Home
	Duplex
	A-Frame
X	Wood Frame

Building Style: PLAIN

Yr Built	Remodeled
0	0

Condition: Good

Room List

	Basement
	1st Floor
	2nd Floor
	Bedrooms

(1) Exterior

	Wood/Shingle
X	Aluminum/Vinyl
	Brick
X	Insulation

(2) Windows

X	Many Avg. Few		Large Avg. Small

	Wood Sash
	Metal Sash
X	Vinyl Sash
	Double Hung
	Horiz. Slide
	Casement
	Double Glass
	Patio Doors
X	Storms & Screens

(3) Roof

X	Gable		Gambrel
	Hip		Mansard
	Flat		Shed

X	Asphalt Shingle

Chimney:

(3) Roof (cont.)

	Eavestrough
X	Insulation
0	Front Overhang
0	Other Overhang

(4) Interior

X	Drywall Paneled		Plaster Wood T&G

Trim & Decoration

	Ex	X	Ord		Min

Size of Closets

	Lg	X	Ord		Small

Doors: Solid X H.C.

(5) Floors

Kitchen:
Other: Linoleum
Other: Carpeted

(6) Ceilings

X	Drywall

(7) Excavation

Basement: 0 S.F.
Crawl: 0 S.F.
Slab: 0 S.F.
Height to Joists: 0.0

(8) Basement

	Conc. Block
	Poured Conc.
	Stone
	Treated Wood
	Concrete Floor

(9) Basement Finish

	Recreation SF
	Living SF
	Walkout Doors (B)
	No Floor SF
	Walkout Doors (A)

(10) Floor Support

Joists:
Unsupported Len:
Cntr.Sup:

(11) Heating/Cooling

X	Gas Wood		Oil Coal		Elec. Steam

	Forced Air w/o Ducts
X	Forced Air w/ Ducts
	Forced Hot Water
	Electric Baseboard
	Elec. Ceil. Radiant
	Radiant (in-floor)
	Electric Wall Heat
	Space Heater
	Wall/Floor Furnace
	Forced Heat & Cool
	Heat Pump
	No Heating/Cooling

	Central Air
	Wood Furnace

(12) Electric

150	Amps Service

No./Qual. of Fixtures

	Ex.	X	Ord.		Min

No. of Elec. Outlets

	Many	X	Ave.		Few

(13) Plumbing

1	Average Fixture(s)
	3 Fixture Bath
	2 Fixture Bath
	Softener, Auto
	Softener, Manual
	Solar Water Heat
	No Plumbing
	Extra Toilet
	Extra Sink
	Separate Shower
	Ceramic Tile Floor
	Ceramic Tile Wains
	Ceramic Tub Alcove
	Vent Fan

(14) Water/Sewer

	Public Water
	Public Sewer
1	Water Well
1	1000 Gal Septic
	2000 Gal Septic

Lump Sum Items:

(15) Built-ins

	Appliance Allow.
	Cook Top
	Dishwasher
	Garbage Disposal
	Bath Heater
	Vent Fan
	Hot Tub
	Unvented Hood
	Vented Hood
	Intercom
	Jacuzzi Tub
	Jacuzzi repl.Tub
	Oven
	Microwave
	Standard Range
	Self Clean Range
	Sauna
	Trash Compactor
	Central Vacuum
	Security System

(15) Fireplaces

	Interior 1 Story
	Interior 2 Story
	2nd/Same Stack
	Two Sided
	Exterior 1 Story
	Exterior 2 Story
	Prefab 1 Story
	Prefab 2 Story
	Heat Circulator
	Raised Hearth
	Wood Stove
	Direct-Vented Gas

Class: CD
Effec. Age: 29
Floor Area: 0
Total Base New : 46,972 E.C.F.
Total Depr Cost: 33,350 X 1.297
Estimated T.C.V: 43,255

(16) Porches/Decks

Area	Type
200	WGEP (1 Story)

(17) Garage

Year Built:
Car Capacity:
Class: CD
Exterior: Pole
Brick Ven.: 0
Stone Ven.: 0
Common Wall: Detache
Foundation: 18 Inch
Finished ?: Yes
Auto. Doors: 0
Mech. Doors: 0
Area: 704
% Good: 0
Storage Area: 0
No Conc. Floor: 0

Bsmnt Garage:

Carport Area:
Roof:

Cost Est. for Res. Bldg: 1 Single Family PLAIN Cls CD Blt 0
(11) Heating System: Forced Air w/ Ducts
Ground Area = 0 SF Floor Area = 0 SF.
Phy/Ab.Phy/Func/Econ/Comb. % Good=71/100/100/100/71

Building Areas Stories Exterior Foundation	Size	Cost New	Depr. Cost
Other Additions/Adjustments			
Water/Sewer			
1000 Gal Septic	1	4,582	3,253
Water Well, 100 Feet	1	5,680	4,033
Porches			
WGEP (1 Story)	200	13,858	9,839
Garages			
Class: CD Exterior: Pole (Finished)			
Base Cost	704	22,852	16,225
Totals:		46,972	33,350

Notes:

ECF (RESIDENTIAL) 1.297 => TCV: 43,255

*** Information herein deemed reliable but not guaranteed***

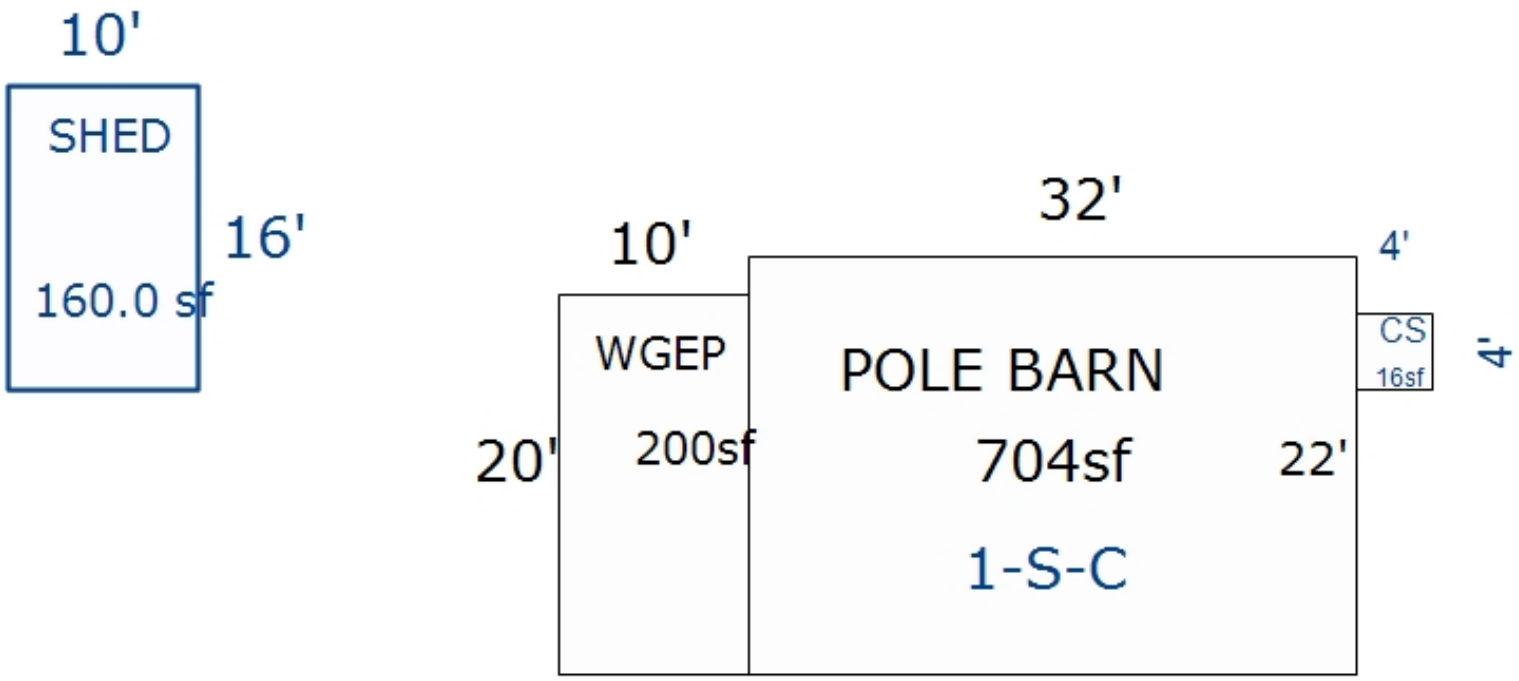

*** Information herein deemed reliable but not guaranteed***

Parcel Number: 2410-RETR-21 Jurisdiction: GREENWOOD TWP County: WEXFORD Printed on 02/15/2024

Grantor	Grantee	Sale Price	Sale Date	Inst. Type	Terms of Sale	Liber & Page	Verified By	Prcnt. Trans.
COX, GARY A.	COUTURIER, ANN C & MICHAEI	118,000	04/14/2021	WD	03-ARM'S LENGTH	689/2800	AGENT	100.0
COX, GARY A.		0	07/31/1992	WD	16-LC PAYOFF	6782/181	DEED	0.0
DUNBAR, LEO A.	COX, GARY A.	6,000	08/12/1989	LC	03-ARM'S LENGTH	316:880	DEED	0.0

Property Address

3681 RIVERVIEW RD

Owner's Name/Address

COUTURIER, ANN C & MICHAEL J
P.O BOX 113
WILLIAMSBURG MI 49690-0113

Tax Description

LOTS 21,22,26,27 THE RETREAT GW. SEC. 10 T24N R10W -MANTON-

Comments/Influences

Class: RESIDENTIAL-IMPROV Zoning:

School: MANTON CONSOLIDATED SCHOOLS

P.R.E. 100% 05/15/2023

:

2024 Est TCV 148,615 TCV/TFA: 0.00

Building Permit(s)	Date	Number	Status
RESIDENTIAL - REMODEL	08/05/1993	PE7476	

X Improved | Vacant

	Public Improvements
	Dirt Road
X	Gravel Road
	Paved Road
	Storm Sewer
	Sidewalk
	Water
	Sewer
X	Electric
	Gas
	Curb
	Street Lights
	Standard Utilities
	Underground Utils.

	Topography of Site
	Level
X	Rolling
	Low
X	High
	Landscaped
	Swamp
X	Wooded
	Pond
	Waterfront
	Ravine
	Wetland
	Flood Plain
X	OPEN

Who	When	What
DB	12/21/2023	INSPECTION
GLA	05/13/2021	INSPECTION

Land Value Estimates for Land Table 4010.LAND VALUES

Description	Frontage	Depth	* Factors * Front	Depth	Rate	%Adj.	Reason	Value
RET M R HIGH	160.00	0.00	1.0000	1.0000	315	100		50,400
RETREAT-OFF WAT	200.00	0.00	1.0000	1.0000	233	100		46,600
360 Actual Front Feet, 0.00 Total Acres							Total Est. Land Value =	97,000

Land Improvement Cost Estimates

Description	Rate	Size	% Good	Cash Value
D/W/P: 3.5 Concrete	6.63	72	78	372
D/W/P: Crushed Rock	2.29	8	0	0
Total Estimated Land Improvements True Cash Value =				372

Year	Land Value	Building Value	Assessed Value	Board of Review	Tribunal/ Other	Taxable Value
2024	48,500	25,800	74,300			58,198C
2023	37,700	20,300	58,000			53,130C
2022	33,600	17,000	50,600			50,600S
2021	26,000	14,400	40,400			22,682C

The Equalizer. Copyright (c) 1999 - 2009. Licensed To: Township of Greenwood, County of Wexford, Michigan

*** Information herein deemed reliable but not guaranteed***

Building Type

X	Single Family
	Mobile Home
	Town Home
	Duplex
	A-Frame
X	Wood Frame

Building Style: RANCH

Yr Built	Remodeled
0	0

Condition: Good

Room List

	Basement
	1st Floor
	2nd Floor
	Bedrooms

(1) Exterior

	Wood/Shingle
X	Aluminum/Vinyl
	Brick
X	Insulation

(2) Windows

X	Many Avg. Few	X	Large Avg. Small

	Wood Sash
	Metal Sash
X	Vinyl Sash
	Double Hung
	Horiz. Slide
	Casement
	Double Glass
	Patio Doors
X	Storms & Screens

(3) Roof

X	Gable		Gambrel
	Hip		Mansard
	Flat		Shed

X	Asphalt Shingle

Chimney:

(3) Roof (cont.)

	Eavestrough
X	Insulation
0	Front Overhang
0	Other Overhang

(4) Interior

X	Drywall		Plaster
	Paneled		Wood T&G

Trim & Decoration

	Ex	X	Ord		Min

Size of Closets

	Lg	X	Ord		Small

Doors:		Solid	X	H.C.	

(5) Floors

Kitchen:
Other: Linoleum
Other: Carpeted

(6) Ceilings

X	Drywall

(7) Excavation

Basement: 0 S.F.
Crawl: 0 S.F.
Slab: 0 S.F.
Height to Joists: 0.0

(8) Basement

	Conc. Block
	Poured Conc.
	Stone
	Treated Wood
	Concrete Floor

(9) Basement Finish

	Recreation SF
	Living SF
	Walkout Doors (B)
	No Floor SF
	Walkout Doors (A)

(10) Floor Support

Joists:
Unsupported Len:
Cntr.Sup:

(11) Heating/Cooling

X	Gas		Oil		Elec.
	Wood		Coal		Steam

	Forced Air w/o Ducts
X	Forced Air w/ Ducts
	Forced Hot Water
	Electric Baseboard
	Elec. Ceil. Radiant
	Radiant (in-floor)
	Electric Wall Heat
	Space Heater
	Wall/Floor Furnace
	Forced Heat & Cool
	Heat Pump
	No Heating/Cooling
	Central Air
	Wood Furnace

(12) Electric

150	Amps Service

No./Qual. of Fixtures

	Ex.	X	Ord.		Min

No. of Elec. Outlets

	Many	X	Ave.		Few

(13) Plumbing

1	Average Fixture(s)
	3 Fixture Bath
	2 Fixture Bath
	Softener, Auto
	Softener, Manual
	Solar Water Heat
	No Plumbing
	Extra Toilet
	Extra Sink
	Separate Shower
	Ceramic Tile Floor
	Ceramic Tile Wains
	Ceramic Tub Alcove
	Vent Fan

(14) Water/Sewer

	Public Water
	Public Sewer
1	Water Well
1	1000 Gal Septic
	2000 Gal Septic

Lump Sum Items:

(15) Built-ins

	Appliance Allow.
	Cook Top
	Dishwasher
	Garbage Disposal
	Bath Heater
	Vent Fan
	Hot Tub
	Unvented Hood
	Vented Hood
	Intercom
	Jacuzzi Tub
	Jacuzzi repl.Tub
	Oven
	Microwave
	Standard Range
	Self Clean Range
	Sauna
	Trash Compactor
	Central Vacuum
	Security System

(15) Fireplaces

	Interior 1 Story
	Interior 2 Story
	2nd/Same Stack
	Two Sided
	Exterior 1 Story
	Exterior 2 Story
	Prefab 1 Story
	Prefab 2 Story
	Heat Circulator
	Raised Hearth
	Wood Stove
	Direct-Vented Gas

Class: C
Effec. Age: 1
Floor Area: 0
Total Base New : 39,908 E.C.F.
Total Depr Cost: 39,509 X 1.297
Estimated T.C.V: 51,243

(16) Porches/Decks

Area	Type

(17) Garage

Year Built:
Car Capacity:
Class: C
Exterior: Pole
Brick Ven.: 0
Stone Ven.: 0
Common Wall: Detache
Foundation: 18 Inch
Finished ?:
Auto. Doors: 0
Mech. Doors: 0
Area: 1200
% Good: 0
Storage Area: 0
No Conc. Floor: 0

Bsmnt Garage:

Carport Area:
Roof:

Cost Est. for Res. Bldg: 1 Single Family RANCH Cls C Blt 0
(11) Heating System: Forced Air w/ Ducts
Ground Area = 0 SF Floor Area = 0 SF.
Phy/Ab.Phy/Func/Econ/Comb. % Good=99/100/100/100/99
Building Areas

Stories	Exterior	Foundation	Size	Cost New	Depr. Cost
Other Additions/Adjustments					
Water/Sewer					
1000 Gal Septic			1	4,899	4,850
Water Well, 100 Feet			1	5,849	5,791
Garages					
Class: C Exterior: Pole (Unfinished)					
Base Cost			1200	29,160	28,868
			Totals:	39,908	39,509

Notes:

ECF (RESIDENTIAL) 1.297 => TCV: 51,243

*** Information herein deemed reliable but not guaranteed***

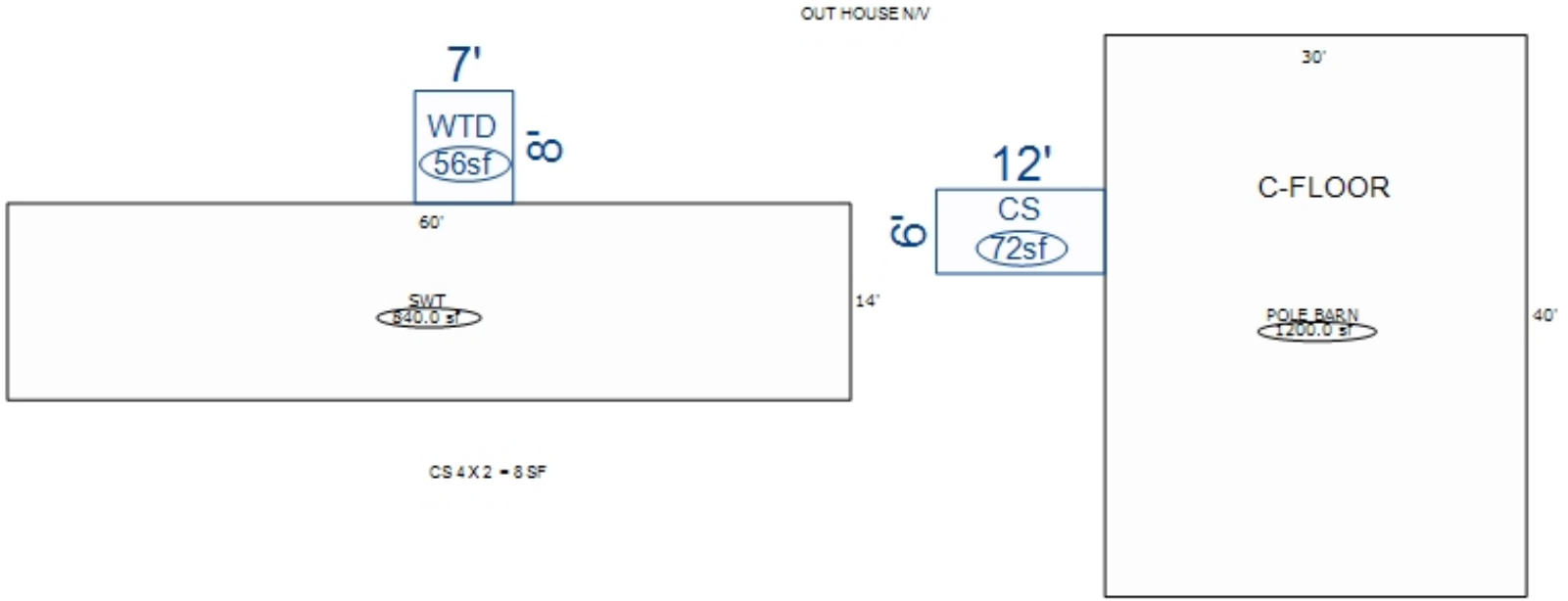

*** Information herein deemed reliable but not guaranteed***

Parcel Number: 2410-RETR-28 Jurisdiction: GREENWOOD TWP County: WEXFORD Printed on 02/15/2024

Grantor	Grantee	Sale Price	Sale Date	Inst. Type	Terms of Sale	Liber & Page	Verified By	Prcnt. Trans.
DUNBAR, LEO A.	MAJDAN, RICHARD D.	5,500	09/15/1989	LC	03-ARM'S LENGTH	317:621	DEED	0.0

Property Address

Owner's Name/Address

LAXTON, LARRY B.
& SHERRY
3845 RIVERVIEW RD
MANTON MI 49663

Tax Description

LOTS 28,29,30,31,32,33 34,35,36,37,40,41
THE RETREAT GW. SEC. 10 T24N R10W
-MANTON-

Comments/Influences

Class: RESIDENTIAL-VACANT Zoning:

School: MANTON CONSOLIDATED SCHOOLS

P.R.E. 0%

:

2024 Est TCV 182,800

Building Permit(s)	Date	Number	Status

	Improved	X	Vacant

	Public Improvements
X	Dirt Road
X	Gravel Road
	Paved Road
	Storm Sewer
	Sidewalk
	Water
	Sewer
X	Electric
	Gas
	Curb
	Street Lights
	Standard Utilities
	Underground Utils.

	Topography of Site
	Level
X	Rolling
	Low
X	High
	Landscaped
	Swamp
X	Wooded
	Pond
	Waterfront
	Ravine
	Wetland
	Flood Plain
X	OPEN

Who	When	What
GLA	10/31/2022	INSPECTION

Land Value Estimates for Land Table 4010.LAND VALUES

Description	Frontage	Depth	* Factors * Front	Depth	Rate	%Adj.	Reason	Value
RETREAT-OFF WAT	1207.00	0.00	1.0000	1.0000	233	65	LONG NARROW PARCEL	182,80
1207 Actual Front Feet, 0.00 Total Acres							Total Est. Land Value =	182,800

Year	Land Value	Building Value	Assessed Value	Board of Review	Tribunal/ Other	Taxable Value
2024	91,400	0	91,400			8,812C
2023	84,500	0	84,500			8,393C
2022	72,200	0	72,200			7,994C
2021	60,200	0	60,200			7,739C

The Equalizer. Copyright (c) 1999 - 2009.
Licensed To: Township of Greenwood, County of Wexford, Michigan

*** Information herein deemed reliable but not guaranteed***

Parcel Number: 2410-RETR-38 Jurisdiction: GREENWOOD TWP County: WEXFORD Printed on 02/15/2024

Grantor	Grantee	Sale Price	Sale Date	Inst. Type	Terms of Sale	Liber & Page	Verified By	Prcnt. Trans.
DUNBAR, LEO A.	MAJDAN, RICHARD	2,000	06/13/1989	WD	03-ARM'S LENGTH	315:976	DEED	0.0

Property Address

3836 RIVERVIEW RD

Owner's Name/Address

LAXTON, LARRY
& SHERRY
3845 RIVERVIEW RD
MANTON MI 49663

Tax Description

LOTS 38 & 39 THE RETREAT GW. SEC. 10 T24N R10W -MANTON-

Comments/Influences

Default Comments

Class: RESIDENTIAL-VACANT Zoning:

School: MANTON CONSOLIDATED SCHOOLS

P.R.E. 0%

:

2024 Est TCV 100,322 TCV/TFA: 0.00

Building Permit(s)	Date	Number	Status

X Improved | Vacant

	Public Improvements
	Dirt Road
X	Gravel Road
	Paved Road
	Storm Sewer
	Sidewalk
	Water
	Sewer
X	Electric
	Gas
	Curb
	Street Lights
	Standard Utilities
	Underground Utils.

	Topography of Site
	Level
X	Rolling
	Low
X	High
	Landscaped
	Swamp
X	Wooded
	Pond
	Waterfront
	Ravine
	Wetland
	Flood Plain
X	OPEN

Who When What

GLA 10/31/2022 INSPECTION
GLA 08/07/2014 INSPECTED

Land Value Estimates for Land Table 4010.LAND VALUES

Description	Frontage	Depth	* Factors * Front	Depth	Rate	%Adj.	Reason	Value
RETREAT-OFF WAT	200.00	0.00	1.0000	1.0000	233	100		46,600
200 Actual Front Feet, 0.00 Total Acres							Total Est. Land Value =	46,600

Year	Land Value	Building Value	Assessed Value	Board of Review	Tribunal/ Other	Taxable Value
2024	23,300	26,900	50,200			28,554C
2023	14,000	0	14,000			1,576C
2022	12,000	0	12,000			1,501C
2021	10,000	0	10,000			1,454C

The Equalizer. Copyright (c) 1999 - 2009.
Licensed To: Township of Greenwood, County of Wexford, Michigan

*** Information herein deemed reliable but not guaranteed***

Building Type

X	Single Family
	Mobile Home
	Town Home
	Duplex
	A-Frame
X	Wood Frame

Building Style: PLAIN

Yr Built	Remodeled
0	0

Condition: Good

Room List

	Basement
	1st Floor
	2nd Floor
	Bedrooms

(1) Exterior

	Wood/Shingle
X	Aluminum/Vinyl
	Brick
X	Insulation

(2) Windows

	Many		Large
X	Avg.	X	Avg.
	Few		Small

	Wood Sash
	Metal Sash
X	Vinyl Sash
	Double Hung
	Horiz. Slide
	Casement
	Double Glass
	Patio Doors
X	Storms & Screens

(3) Roof

X	Gable		Gambrel
	Hip		Mansard
	Flat		Shed

X	Asphalt Shingle

Chimney:

(3) Roof (cont.)

	Eavestrough
X	Insulation
0	Front Overhang
0	Other Overhang

(4) Interior

X	Drywall		Plaster
	Paneled		Wood T&G

Trim & Decoration

	Ex	X	Ord		Min

Size of Closets

	Lg	X	Ord		Small

Doors:		Solid	X	H.C.	

(5) Floors

Kitchen:
Other: Linoleum
Other: Carpeted

(6) Ceilings

X	Drywall

(7) Excavation

Basement: 0 S.F.
Crawl: 0 S.F.
Slab: 0 S.F.
Height to Joists: 0.0

(8) Basement

	Conc. Block
	Poured Conc.
	Stone
	Treated Wood
	Concrete Floor

(9) Basement Finish

	Recreation SF
	Living SF
	Walkout Doors (B)
	No Floor SF
	Walkout Doors (A)

(10) Floor Support

Joists:
Unsupported Len:
Cntr.Sup:

(11) Heating/Cooling

X	Gas		Oil		Elec.
	Wood		Coal		Steam

	Forced Air w/o Ducts
X	Forced Air w/ Ducts
	Forced Hot Water
	Electric Baseboard
	Elec. Ceil. Radiant
	Radiant (in-floor)
	Electric Wall Heat
	Space Heater
	Wall/Floor Furnace
	Forced Heat & Cool
	Heat Pump
	No Heating/Cooling

	Central Air
	Wood Furnace

(12) Electric

150	Amps Service

No./Qual. of Fixtures

	Ex.	X	Ord.		Min

No. of Elec. Outlets

	Many	X	Ave.		Few

(13) Plumbing

	Average Fixture(s)
	3 Fixture Bath
	2 Fixture Bath
	Softener, Auto
	Softener, Manual
	Solar Water Heat
	No Plumbing
	Extra Toilet
	Extra Sink
	Separate Shower
	Ceramic Tile Floor
	Ceramic Tile Wains
	Ceramic Tub Alcove
	Vent Fan

(14) Water/Sewer

	Public Water
	Public Sewer
	Water Well
	1000 Gal Septic
	2000 Gal Septic

Lump Sum Items:

(15) Built-ins

	Appliance Allow.
	Cook Top
	Dishwasher
	Garbage Disposal
	Bath Heater
	Vent Fan
	Hot Tub
	Unvented Hood
	Vented Hood
	Intercom
	Jacuzzi Tub
	Jacuzzi repl.Tub
	Oven
	Microwave
	Standard Range
	Self Clean Range
	Sauna
	Trash Compactor
	Central Vacuum
	Security System

(15) Fireplaces

	Interior 1 Story
	Interior 2 Story
	2nd/Same Stack
	Two Sided
	Exterior 1 Story
	Exterior 2 Story
	Prefab 1 Story
	Prefab 2 Story
	Heat Circulator
	Raised Hearth
	Wood Stove
	Direct-Vented Gas

Class: CD
Effec. Age: 2
Floor Area: 0
Total Base New : 42,265 E.C.F.
Total Depr Cost: 41,420 X 1.297
Estimated T.C.V: 53,722

(16) Porches/Decks

Area	Type

(17) Garage

Year Built: 202?
Car Capacity:
Class: D
Exterior: Pole
Brick Ven.: 0
Stone Ven.: 0
Common Wall: Detache
Foundation: 18 Inch
Finished ?:
Auto. Doors: 0
Mech. Doors: 0
Area: 2400
% Good: 0
Storage Area: 0
No Conc. Floor: 0

Bsmnt Garage:

Carport Area:
Roof:

Cost Est. for Res. Bldg: 1 Single Family PLAIN Cls CD Blt 0
(11) Heating System: Forced Air w/ Ducts
Ground Area = 0 SF Floor Area = 0 SF.
Phy/Ab.Phy/Func/Econ/Comb. % Good=98/100/100/100/98
Building Areas

Stories	Exterior	Foundation	Size	Cost New	Depr. Cost
Other Additions/Adjustments					
Plumbing					
3 Fixture Bath			1	-3,887	-3,809
Garages					
Class: D Exterior: Pole (Unfinished)					
Base Cost			2400	46,152	45,229
			Totals:	42,265	41,420

Notes:

ECF (RESIDENTIAL) 1.297 => TCV: 53,722

*** Information herein deemed reliable but not guaranteed***

Parcel Number: 2410Z-PER-01 Jurisdiction: GREENWOOD TWP County: WEXFORD Printed on 02/15/2024

Grantor	Grantee	Sale Price	Sale Date	Inst. Type	Terms of Sale	Liber & Page	Verified By	Prcnt. Trans.

Property Address	Class: COMMERCIAL PERSONA	Zoning:	Building Permit(s)	Date	Number	Status
VARIOUS	School: MANTON CONSOLIDATED SCHOOLS					
	P.R.E. 100% / / MBT Com.					
Owner's Name/Address	:					
DISH NETWORK, LLC P O BOX 6623 ENGLEWOOD CO 80155	2024 Est TCV 0					

Improved | Vacant

Land Value Estimates for Land Table GRE.

Description	Frontage	Depth	* Factors * Front	Depth	Rate	%Adj.	Reason	Value
		0.00	Total Acres		Total Est. Land Value =			0

Tax Description

PERSONAL PROPERTY GW T24N R10W -MANTON-

Comments/Influences

Public Improvements

- Dirt Road
- Gravel Road
- Paved Road
- Storm Sewer
- Sidewalk
- Water
- Sewer
- Electric
- Gas
- Curb
- Street Lights
- Standard Utilities
- Underground Utils.

Topography of Site

- Level
- Rolling
- Low
- High
- Landscaped
- Swamp
- Wooded
- Pond
- Waterfront
- Ravine
- Wetland
- Flood Plain

Who When What

Year		Personal Property	Assessed Value	Board of Review	Tribunal/ Other	Taxable Value
2024	0	0	0			0
2023	0	0	0			0
2022	0	0	0			0
2021	0	0	0			0

The Equalizer. Copyright (c) 1999 - 2009.
Licensed To: Township of Greenwood, County of Wexford, Michigan

*** Information herein deemed reliable but not guaranteed***

Bought During	Computer Equipment
Prior	14,980* 8%
Total	14,980
TCV->	1,198

Pages 3 to 4. Other Personal Property	Claimed Value	Depr	Depr.Value
Section G. Other Assessable Personal Property	0	100	0
Section H. Assessable Tools	0	100	0
Section I. Qualified Personal Property	0	100	0
Section M. Leasehold Improvements	0	TBL	0
Section N. Buildings on Leased Land	0	TBL	0
Section O. Rental Information	0	100	0
13. Idle Equipment	0	TBL	0
14. Construction in Progress	0	50	0
15 & 16. Cable, Utility & Cellular Assets	0	TBL	0

Total Cost New= 14,980 TCV= 1,198 Assessed Value= 600

*** Information herein deemed reliable but not guaranteed***

Parcel Number: 2410Z-PER-02 Jurisdiction: GREENWOOD TWP County: WEXFORD Printed on 02/15/2024

Grantor	Grantee	Sale Price	Sale Date	Inst. Type	Terms of Sale	Liber & Page	Verified By	Prcnt. Trans.

Property Address	Class: COMMERCIAL PERSONA	Zoning:	Building Permit(s)	Date	Number	Status
VARIOUS	School: MANTON CONSOLIDATED SCHOOLS					
	P.R.E. 100% / / MBT Com.					
Owner's Name/Address	:					
DISHNET SATELLITE BROADBAND LLC P O BOX 6623 ENGLEWOOD CO 80155	2024 Est TCV 0					

Improved | Vacant

Land Value Estimates for Land Table GRE.

Description	Frontage	Depth	* Factors * Front	Depth	Rate	%Adj.	Reason	Value
		0.00	Total Acres		Total Est. Land Value =			0

Public Improvements

- Dirt Road
- Gravel Road
- Paved Road
- Storm Sewer
- Sidewalk
- Water
- Sewer
- Electric
- Gas
- Curb
- Street Lights
- Standard Utilities
- Underground Utils.

Topography of Site

- Level
- Rolling
- Low
- High
- Landscaped
- Swamp
- Wooded
- Pond
- Waterfront
- Ravine
- Wetland
- Flood Plain

Tax Description

PERSONAL GW. SEC. 25 T24N R10W -MANTON-

Comments/Influences

Who When What

Year		Personal Property	Assessed Value	Board of Review	Tribunal/ Other	Taxable Value
2024	0	0	0			0
2023	0	0	0			0
2022	0	0	0			0
2021	0	0	0			0

The Equalizer. Copyright (c) 1999 - 2009.
Licensed To: Township of Greenwood, County of Wexford, Michigan

*** Information herein deemed reliable but not guaranteed***

Pages 3 to 4. Other Personal Property	Claimed Value	Depr	Depr.Value
Section G. Other Assessable Personal Property	0	100	0
Section H. Assessable Tools	0	100	0
Section I. Qualified Personal Property	0	100	0
Section M. Leasehold Improvements	0	TBL	0
Section N. Buildings on Leased Land	0	TBL	0
Section O. Rental Information	0	100	0
13. Idle Equipment	0	TBL	0
14. Construction in Progress	0	50	0
15 & 16. Cable, Utility & Cellular Assets	0	TBL	0

Total Cost New= 0 TCV= 0 Assessed Value= 0

*** Information herein deemed reliable but not guaranteed***

Parcel Number: 2410Z-PER-03 Jurisdiction: GREENWOOD TWP County: WEXFORD Printed on 02/15/2024

Grantor	Grantee	Sale Price	Sale Date	Inst. Type	Terms of Sale	Liber & Page	Verified By	Prcnt. Trans.

Property Address	Class: UTILITY PERSONAL P	Zoning:	Building Permit(s)	Date	Number	Status
MANTON SCHOOLS	School: MANTON CONSOLIDATED SCHOOLS					
	P.R.E. 0%					
Owner's Name/Address	:					
CONSUMERS ENERGY EP10 PROPERTY TAX ONE ENERGY PLAZA JACKSON MI 49201-9981	2024 Est TCV 1,457,097					

Improved | Vacant

Land Value Estimates for Land Table .

Description	Frontage	Depth	* Factors * Front	Depth	Rate	%Adj.	Reason	Value
		0.00	Total Acres		Total Est. Land Value =			0

Public Improvements

- Dirt Road
- Gravel Road
- Paved Road
- Storm Sewer
- Sidewalk
- Water
- Sewer
- Electric
- Gas
- Curb
- Street Lights
- Standard Utilities
- Underground Utils.

Topography of Site

- Level
- Rolling
- Low
- High
- Landscaped
- Swamp
- Wooded
- Pond
- Waterfront
- Ravine
- Wetland
- Flood Plain

Tax Description

PERSONAL GW. SEC'S. 15,22,23,25,26,27,28 33,34, 35,36 T24N R10W -MANTON-

Comments/Influences

Who When What

Year		Personal Property	Assessed Value	Board of Review	Tribunal/ Other	Taxable Value
2024	0	728,500	728,500			728,500S
2023	0	749,700	749,700			749,700S
2022	0	617,200	617,200			617,200S
2021	0	587,200	587,200			587,200S

The Equalizer. Copyright (c) 1999 - 2009. Licensed To: Township of Greenwood, County of Wexford, Michigan

*** Information herein deemed reliable but not guaranteed***

Bought During	Electric Transmission
2022	283,555*93%
2021	96,466*90%
2020	73,399*86%
2019	171,444*82%
2018	274,159*78%
2017	57,654*74%
2016	38,904*70%
2015	47,562*67%
2014	17,481*64%
2013	19,329*61%
2012	46,371*58%
2011	2,732*55%
2010	45,104*52%
2009	42,519*50%
Prior	970,392*50%
Total	2,187,071
TCV->	1,451,127

Pages 3 to 4. Other Personal Property	Claimed Value	Depr	Depr.Value
Section G. Other Assessable Personal Property	0	100	0
Section H. Assessable Tools	0	100	0
Section I. Qualified Personal Property	0	100	0
Section M. Leasehold Improvements	0	TBL	0
Section N. Buildings on Leased Land	0	TBL	0
Section O. Rental Information	0	100	0
13. Idle Equipment	0	TBL	0
14. Construction in Progress	0	50	0
15 & 16. Cable, Utility & Cellular Assets	2,187,071	TBL	1,451,127
Adjustment: ROW			5,970

Total Cost New= 2,187,071 TCV= 1,457,097 Assessed Value= 728,500

*** Information herein deemed reliable but not guaranteed***

Parcel Number: 2410Z-PER-04 Jurisdiction: GREENWOOD TWP County: WEXFORD Printed on 02/15/2024

Grantor	Grantee	Sale Price	Sale Date	Inst. Type	Terms of Sale	Liber & Page	Verified By	Prcnt. Trans.

Property Address	Class: UTILITY PERSONAL P	Zoning:	Building Permit(s)	Date	Number	Status
MESICK SCHOOLS	School: MESICK CONSOLIDATED SCH DIST					
	P.R.E. 0%					
Owner's Name/Address	:					
CONSUMERS ENERGY EP10 PROPERTY TAX ONE ENERGY PLAZA JACKSON MI 49201	2024 Est TCV 110,232					

Tax Description

PERSONAL GW. SEC. 31, 32 & 33 T24N R10W
-MESICK-

Comments/Influences

The Equalizer. Copyright (c) 1999 - 2009. Licensed To: Township of Greenwood, County of Wexford, Michigan

[ ] Improved [ ] Vacant

Land Value Estimates for Land Table GRE.

Description	Frontage	Depth	* Factors * Front	Depth	Rate	%Adj.	Reason	Value
		0.00	Total Acres		Total Est. Land Value =			0

Public Improvements

- [ ] Dirt Road
- [ ] Gravel Road
- [ ] Paved Road
- [ ] Storm Sewer
- [ ] Sidewalk
- [ ] Water
- [ ] Sewer
- [ ] Electric
- [ ] Gas
- [ ] Curb
- [ ] Street Lights
- [ ] Standard Utilities
- [ ] Underground Utils.

Topography of Site

- [ ] Level
- [ ] Rolling
- [ ] Low
- [ ] High
- [ ] Landscaped
- [ ] Swamp
- [ ] Wooded
- [ ] Pond
- [ ] Waterfront
- [ ] Ravine
- [ ] Wetland
- [ ] Flood Plain

Who When What

Year		Personal Property	Assessed Value	Board of Review	Tribunal/ Other	Taxable Value
2024	0	55,100	55,100			55,100S
2023	0	56,700	56,700			56,700S
2022	0	48,200	48,200			48,200S
2021	0	50,100	50,100			50,100S

*** Information herein deemed reliable but not guaranteed***

Bought During	Electric Transmission
2022	20,684*93%
2020	13,044*86%
2018	3,609*78%
2017	1,266*74%
2016	7,206*70%
2015	2,418*67%
2014	18,970*64%
2013	1,681*61%
2012	1,732*58%
2011	3,001*55%
2010	9,034*52%
2009	18,981*50%
Prior	78,695*50%
Total	180,321
TCV->	110,229

Pages 3 to 4. Other Personal Property	Claimed Value	Depr	Depr.Value
Section G. Other Assessable Personal Property	0	100	0
Section H. Assessable Tools	0	100	0
Section I. Qualified Personal Property	0	100	0
Section M. Leasehold Improvements	0	TBL	0
Section N. Buildings on Leased Land	0	TBL	0
Section O. Rental Information	0	100	0
13. Idle Equipment	0	TBL	0
14. Construction in Progress	0	50	0
15 & 16. Cable, Utility & Cellular Assets	180,321	TBL	110,229
Adjustment: ROW			3

Total Cost New= 180,321 TCV= 110,232 Assessed Value= 55,100

*** Information herein deemed reliable but not guaranteed***

Parcel Number: 2410Z-PER-05 Jurisdiction: GREENWOOD TWP County: WEXFORD Printed on 02/15/2024

Grantor	Grantee	Sale Price	Sale Date	Inst. Type	Terms of Sale	Liber & Page	Verified By	Prcnt. Trans.

Property Address	Class: UTILITY PERSONAL P	Zoning:	Building Permit(s)	Date	Number	Status
KINGSLEY SCHOOLS	School: KINGSLEY AREA SCHOOL					
	P.R.E. 0%					
Owner's Name/Address	:					
CONSUMERS ENERGY EP10 PROPERTY TAX ONE ENERGY PLAZA JACKSON MI 49201	2024 Est TCV 554,211					

Improved | Vacant

Land Value Estimates for Land Table .

Description	Frontage	Depth	* Factors * Front	Depth	Rate	%Adj.	Reason	Value
		0.00	Total Acres		Total Est. Land Value =			0

Public Improvements

- Dirt Road
- Gravel Road
- Paved Road
- Storm Sewer
- Sidewalk
- Water
- Sewer
- Electric
- Gas
- Curb
- Street Lights
- Standard Utilities
- Underground Utils.

Topography of Site

- Level
- Rolling
- Low
- High
- Landscaped
- Swamp
- Wooded
- Pond
- Waterfront
- Ravine
- Wetland
- Flood Plain

Who When What

Tax Description

PERSONAL GW. SEC. 3 4 & 5 T24N R10W
-KINGSLEY-

Comments/Influences

Year		Personal Property	Assessed Value	Board of Review	Tribunal/ Other	Taxable Value
2024	0	277,100	277,100			277,100S
2023	0	285,900	285,900			285,900S
2022	0	217,300	217,300			217,300S
2021	0	180,400	180,400			180,400S

The Equalizer. Copyright (c) 1999 - 2009.
Licensed To: Township of Greenwood, County of Wexford, Michigan

*** Information herein deemed reliable but not guaranteed***

Bought During	Electric Transmission
2022	149,216*93%
2021	89,511*90%
2020	156,261*86%
2019	5,148*82%
2018	29,981*78%
2017	3,640*74%
2016	14,641*70%
2015	12,100*67%
2014	6,542*64%
2012	25,215*58%
2011	8,224*55%
2010	3,530*52%
2009	21,546*50%
Prior	231,771*50%
Total	757,326
TCV->	554,201

Pages 3 to 4. Other Personal Property	Claimed Value	Depr	Depr.Value
Section G. Other Assessable Personal Property	0	100	0
Section H. Assessable Tools	0	100	0
Section I. Qualified Personal Property	0	100	0
Section M. Leasehold Improvements	0	TBL	0
Section N. Buildings on Leased Land	0	TBL	0
Section O. Rental Information	0	100	0
13. Idle Equipment	0	TBL	0
14. Construction in Progress	0	50	0
15 & 16. Cable, Utility & Cellular Assets	757,326	TBL	554,201
Adjustment: ROW			10

Total Cost New= 757,326 TCV= 554,211 Assessed Value= 277,100

*** Information herein deemed reliable but not guaranteed***

Parcel Number: 2410Z-PER-06 Jurisdiction: GREENWOOD TWP County: WEXFORD Printed on 02/15/2024

Grantor	Grantee	Sale Price	Sale Date	Inst. Type	Terms of Sale	Liber & Page	Verified By	Prcnt. Trans.

Property Address	Class: COMMERCIAL PERSONA	Zoning:	Building Permit(s)	Date	Number	Status
VARIOUS	School: MANTON CONSOLIDATED SCHOOLS					
	P.R.E. 100% / / MBT Com.					
Owner's Name/Address	:					
HUGHES NETWORK SYSTEMS LLC C/O RYAN TAX COMPLIANCE SERVICES P O BOX 460049 HOUSTON TX 77056	2024 Est TCV 0					

Tax Description

PERSONAL PROPERTY GW T24N R10W -MANTON-

Comments/Influences

Default Comments

	Improved		Vacant

Public Improvements

- Dirt Road
- Gravel Road
- Paved Road
- Storm Sewer
- Sidewalk
- Water
- Sewer
- Electric
- Gas
- Curb
- Street Lights
- Standard Utilities
- Underground Utils.

Topography of Site

- Level
- Rolling
- Low
- High
- Landscaped
- Swamp
- Wooded
- Pond
- Waterfront
- Ravine
- Wetland
- Flood Plain

Who When What

Land Value Estimates for Land Table GRE.

Description	Frontage	Depth	* Factors * Front	Depth	Rate	%Adj.	Reason	Value
		0.00	Total Acres		Total Est. Land Value =			0

Year		Personal Property	Assessed Value	Board of Review	Tribunal/ Other	Taxable Value
2024	0	0	0			0
2023	0	0	0			0
2022	0	0	0			0
2021	0	0	0			0

The Equalizer. Copyright (c) 1999 - 2009.
Licensed To: Township of Greenwood, County of Wexford, Michigan

*** Information herein deemed reliable but not guaranteed***

Bought During	Computer Equipment
Prior	1,979* 8%
Total	1,979
TCV->	158

Pages 3 to 4. Other Personal Property	Claimed Value	Depr	Depr.Value
Section G. Other Assessable Personal Property	0	100	0
Section H. Assessable Tools	0	100	0
Section I. Qualified Personal Property	0	100	0
Section M. Leasehold Improvements	0	TBL	0
Section N. Buildings on Leased Land	0	TBL	0
Section O. Rental Information	0	100	0
13. Idle Equipment	0	TBL	0
14. Construction in Progress	0	50	0
15 & 16. Cable, Utility & Cellular Assets	0	TBL	0

Total Cost New= 1,979 TCV= 158 Assessed Value= 100

*** Information herein deemed reliable but not guaranteed***

Parcel Number: 2410Z-PER-08 Jurisdiction: GREENWOOD TWP County: WEXFORD Printed on 02/15/2024

Grantor	Grantee	Sale Price	Sale Date	Inst. Type	Terms of Sale	Liber & Page	Verified By	Prcnt. Trans.

Property Address	Class: UTILITY PERSONAL P	Zoning:	Building Permit(s)	Date	Number	Status
VARIOUS	School: MANTON CONSOLIDATED SCHOOLS					
	P.R.E. 0%					
Owner's Name/Address	:					
DTE GAS COMPANY P O BOX 33017 DETROIT MI 48232	2024 Est TCV 464,775					

Improved | Vacant

Land Value Estimates for Land Table GRE.

Description	Frontage	Depth	* Factors * Front	Depth	Rate	%Adj.	Reason	Value
		0.00	Total Acres		Total Est. Land Value =			0

Public Improvements

- Dirt Road
- Gravel Road
- Paved Road
- Storm Sewer
- Sidewalk
- Water
- Sewer
- Electric
- Gas
- Curb
- Street Lights
- Standard Utilities
- Underground Utils.

Topography of Site

- Level
- Rolling
- Low
- High
- Landscaped
- Swamp
- Wooded
- Pond
- Waterfront
- Ravine
- Wetland
- Flood Plain

Tax Description

PERSONAL GW. T24N R10W -MANTON-

Comments/Influences

Who When What

Year		Personal Property	Assessed Value	Board of Review	Tribunal/ Other	Taxable Value
2024	0	232,400	232,400			232,400S
2023	0	228,500	228,500			228,500S
2022	0	240,600	240,600			240,600S
2021	0	243,000	243,000			243,000S

The Equalizer. Copyright (c) 1999 - 2009.
Licensed To: Township of Greenwood, County of Wexford, Michigan

*** Information herein deemed reliable but not guaranteed***

Bought During	Gas Distribution	Gas Transmission
2023		31,352*97%
2021	18,064*81%	
2018	43,749*67%	
2017	390*63%	341,932*67%
2013		83,254*53%
Prior	28,690*32%	231,093*45%
Total	90,893	687,631
TCV->	53,371	407,622

Pages 3 to 4. Other Personal Property	Claimed Value	Depr	Depr.Value
Section G. Other Assessable Personal Property	0	100	0
Section H. Assessable Tools	0	100	0
Section I. Qualified Personal Property	0	100	0
Section M. Leasehold Improvements	0	TBL	0
Section N. Buildings on Leased Land	0	TBL	0
Section O. Rental Information	0	100	0
13. Idle Equipment	0	TBL	0
14. Construction in Progress	0	50	0
15 & 16. Cable, Utility & Cellular Assets	778,524	TBL	460,993
Adjustment: ROW			3,782

Total Cost New= 778,524 TCV= 464,775 Assessed Value= 232,400

*** Information herein deemed reliable but not guaranteed***

Parcel Number: 2410Z-PER-09 Jurisdiction: GREENWOOD TWP County: WEXFORD Printed on 02/15/2024

Grantor	Grantee	Sale Price	Sale Date	Inst. Type	Terms of Sale	Liber & Page	Verified By	Prcnt. Trans.

Property Address	Class: UTILITY PERSONAL P	Zoning:	Building Permit(s)	Date	Number	Status
VARIOUS	School: KINGSLEY AREA SCHOOL					
	P.R.E. 0%					
Owner's Name/Address	:					
DTE GAS COMPANY PO BOX 33017 DETROIT MI 48232	2024 Est TCV 72,005					

Tax Description

PERSONAL GW. T24N R10W -KINGSLEY-

Comments/Influences

	Improved		Vacant

Land Value Estimates for Land Table GRE.

Public Improvements
Dirt Road
Gravel Road
Paved Road
Storm Sewer
Sidewalk
Water
Sewer
Electric
Gas
Curb
Street Lights
Standard Utilities
Underground Utils.

Topography of Site
Level
Rolling
Low
High
Landscaped
Swamp
Wooded
Pond
Waterfront
Ravine
Wetland
Flood Plain

Description	Frontage	Depth	* Factors * Front	Depth	Rate	%Adj.	Reason	Value
		0.00	Total Acres		Total Est. Land Value =			0

Year		Personal Property	Assessed Value	Board of Review	Tribunal/ Other	Taxable Value
2024	0	36,000	36,000			36,000S
2023	0	34,100	34,100			34,100S
2022	0	35,600	35,600			35,600S
2021	0	37,200	37,200			37,200S

Who When What

The Equalizer. Copyright (c) 1999 - 2009.
Licensed To: Township of Greenwood, County of Wexford, Michigan

*** Information herein deemed reliable but not guaranteed***

Bought During	Gas Distribution	Gas Transmission
2023		6,943*97%
2017		45,927*67%
2013		18,435*53%
Prior	4,416*32%	49,952*45%
Total	4,416	121,257
TCV->	1,413	69,755

Pages 3 to 4. Other Personal Property	Claimed Value	Depr	Depr.Value
Section G. Other Assessable Personal Property	0	100	0
Section H. Assessable Tools	0	100	0
Section I. Qualified Personal Property	0	100	0
Section M. Leasehold Improvements	0	TBL	0
Section N. Buildings on Leased Land	0	TBL	0
Section O. Rental Information	0	100	0
13. Idle Equipment	0	TBL	0
14. Construction in Progress	0	50	0
15 & 16. Cable, Utility & Cellular Assets	125,673	TBL	71,168
Adjustment: ROW			837

Total Cost New= 125,673 TCV= 72,005 Assessed Value= 36,000

*** Information herein deemed reliable but not guaranteed***

Parcel Number: 2410Z-PER-13 Jurisdiction: GREENWOOD TWP County: WEXFORD Printed on 02/15/2024

Grantor	Grantee	Sale Price	Sale Date	Inst. Type	Terms of Sale	Liber & Page	Verified By	Prcnt. Trans.

Property Address	Class: UTILITY PERSONAL P	Zoning:	Building Permit(s)	Date	Number	Status
VARIOUS	School: KINGSLEY AREA SCHOOL					
	P.R.E. 0%					
Owner's Name/Address	:					
MICHIGAN ELECTRIC TAX DEPT 27175 ENERGY WAY NOVI MI 48377	2024 Est TCV 71,135					

Improved | Vacant

Land Value Estimates for Land Table GRE.

Description	Frontage	Depth	* Factors * Front	Depth	Rate	%Adj.	Reason	Value
		0.00	Total Acres		Total Est. Land Value =			0

Public Improvements

Dirt Road
Gravel Road
Paved Road
Storm Sewer
Sidewalk
Water
Sewer
Electric
Gas
Curb
Street Lights
Standard Utilities
Underground Utils.

Topography of Site

Level
Rolling
Low
High
Landscaped
Swamp
Wooded
Pond
Waterfront
Ravine
Wetland
Flood Plain

Who When What

Tax Description

PERSONAL GREENWOOD TWP, WEXFORD CO, MICHIGAN GW T24N R10W -KINGSLEY

Comments/Influences

Year		Personal Property	Assessed Value	Board of Review	Tribunal/ Other	Taxable Value
2024	0	35,600	35,600			35,600S
2023	0	37,100	37,100			37,100S
2022	0	39,200	39,200			39,200S
2021	0	40,900	40,900			40,900S

The Equalizer. Copyright (c) 1999 - 2009. Licensed To: Township of Greenwood, County of Wexford, Michigan

*** Information herein deemed reliable but not guaranteed***

Bought During	Electric Transmission
2018	42,610*78%
2013	33,766*61%
2009	15,076*50%
Prior	19,528*50%
Total	110,980
TCV->	71,135

Pages 3 to 4. Other Personal Property	Claimed Value	Depr	Depr.Value
Section G. Other Assessable Personal Property	0	100	0
Section H. Assessable Tools	0	100	0
Section I. Qualified Personal Property	0	100	0
Section M. Leasehold Improvements	0	TBL	0
Section N. Buildings on Leased Land	0	TBL	0
Section O. Rental Information	0	100	0
13. Idle Equipment	0	TBL	0
14. Construction in Progress	0	50	0
15 & 16. Cable, Utility & Cellular Assets	110,980	TBL	71,135

Total Cost New= 110,980 TCV= 71,135 Assessed Value= 35,600

*** Information herein deemed reliable but not guaranteed***

Parcel Number: 2410Z-PER-14 Jurisdiction: GREENWOOD TWP County: WEXFORD Printed on 02/15/2024

Grantor	Grantee	Sale Price	Sale Date	Inst. Type	Terms of Sale	Liber & Page	Verified By	Prcnt. Trans.

Property Address	Class: UTILITY PERSONAL P	Zoning:	Building Permit(s)	Date	Number	Status
VARIOUS	School: MANTON CONSOLIDATED SCHOOLS					
	P.R.E. 0%					
Owner's Name/Address	:					
MICHIGAN ELECTRIC STE 200 27175 ENERGY WAY NOVI MI 48377	2024 Est TCV 867,200					

Tax Description

PERSONAL GREENWOOD TOWNSHIP, WEXFORD CO, MICHIGAN GW T24N R10W -MANTON-

Comments/Influences

	Improved		Vacant

Land Value Estimates for Land Table GRE.

Description	Frontage	Depth	* Factors * Front	Depth	Rate	%Adj.	Reason	Value
		0.00	Total Acres		Total Est. Land Value =			0

Public Improvements
Dirt Road
Gravel Road
Paved Road
Storm Sewer
Sidewalk
Water
Sewer
Electric
Gas
Curb
Street Lights
Standard Utilities
Underground Utils.

Topography of Site
Level
Rolling
Low
High
Landscaped
Swamp
Wooded
Pond
Waterfront
Ravine
Wetland
Flood Plain

Who	When	What

Year		Personal Property	Assessed Value	Board of Review	Tribunal/ Other	Taxable Value
2024	0	433,600	433,600			433,600S
2023	0	455,700	455,700			455,700S
2022	0	483,400	483,400			483,400S
2021	0	506,100	506,100			506,100S

The Equalizer. Copyright (c) 1999 - 2009. Licensed To: Township of Greenwood, County of Wexford, Michigan

*** Information herein deemed reliable but not guaranteed***

Bought During	Electric Transmission
2019	26,280*82%
2018	127,831*78%
2017	836,588*74%
2013	95,378*61%
2011	46,025*55%
2009	15,076*50%
Prior	71,667*50%
Total	1,218,845
TCV->	867,200

Pages 3 to 4. Other Personal Property	Claimed Value	Depr	Depr.Value
Section G. Other Assessable Personal Property	0	100	0
Section H. Assessable Tools	0	100	0
Section I. Qualified Personal Property	0	100	0
Section M. Leasehold Improvements	0	TBL	0
Section N. Buildings on Leased Land	0	TBL	0
Section O. Rental Information	0	100	0
13. Idle Equipment	0	TBL	0
14. Construction in Progress	0	50	0
15 & 16. Cable, Utility & Cellular Assets	1,218,845	TBL	867,200

Total Cost New= 1,218,845 TCV= 867,200 Assessed Value= 433,600

*** Information herein deemed reliable but not guaranteed***

Parcel Number: 2410ZPER1702 Jurisdiction: GREENWOOD TWP County: WEXFORD Printed on 02/15/2024

Grantor	Grantee	Sale Price	Sale Date	Inst. Type	Terms of Sale	Liber & Page	Verified By	Prcnt. Trans.

Property Address	Class: COMMERCIAL PERSONA	Zoning:	Building Permit(s)	Date	Number	Status
2047 E 2 1/2 RD	School: MANTON CONSOLIDATED SCHOOLS					
	P.R.E. 100% / / MBT Com.					
Owner's Name/Address	:					
STATE FARM MUTUAL AUTOMOBILE INS CO CORPORATE TAX DEPT ONE STATE FARM PLAZA BLOOMINGTON IL 61710	2024 Est TCV 0					

Tax Description

Comments/Influences

The Equalizer. Copyright (c) 1999 - 2009. Licensed To: Township of Greenwood, County of Wexford, Michigan

[ ] Improved [ ] Vacant

Public Improvements

[ ] Dirt Road
[ ] Gravel Road
[ ] Paved Road
[ ] Storm Sewer
[ ] Sidewalk
[ ] Water
[ ] Sewer
[ ] Electric
[ ] Gas
[ ] Curb
[ ] Street Lights
[ ] Standard Utilities
[ ] Underground Utils.

Topography of Site

[ ] Level
[ ] Rolling
[ ] Low
[ ] High
[ ] Landscaped
[ ] Swamp
[ ] Wooded
[ ] Pond
[ ] Waterfront
[ ] Ravine
[ ] Wetland
[ ] Flood Plain

Who When What

Land Value Estimates for Land Table .

Description	Frontage	Depth	* Factors * Front	Depth	Rate	%Adj.	Reason	Value
		0.00	Total Acres		Total Est. Land Value =			0

Year		Personal Property	Assessed Value	Board of Review	Tribunal/ Other	Taxable Value
2024	0	0	0			0
2023	0	0	0			0
2022	0	0	0			0
2021	0	0	0			0

*** Information herein deemed reliable but not guaranteed***

Bought During	Computer Equipment
2017	117* 8%
Prior	1,417* 8%
Total	1,534
TCV->	122

Pages 3 to 4. Other Personal Property	Claimed Value	Depr	Depr.Value
Section G. Other Assessable Personal Property	0	100	0
Section H. Assessable Tools	0	100	0
Section I. Qualified Personal Property	0	100	0
Section M. Leasehold Improvements	0	TBL	0
Section N. Buildings on Leased Land	0	TBL	0
Section O. Rental Information	0	100	0
13. Idle Equipment	0	TBL	0
14. Construction in Progress	0	50	0
15 & 16. Cable, Utility & Cellular Assets	0	TBL	0

Total Cost New= 1,534 TCV= 122 Assessed Value= 100

*** Information herein deemed reliable but not guaranteed***

Parcel Number: 2410ZPER1901 Jurisdiction: GREENWOOD TWP County: WEXFORD Printed on 02/15/2024

Grantor	Grantee	Sale Price	Sale Date	Inst. Type	Terms of Sale	Liber & Page	Verified By	Prcnt. Trans.

Property Address

Class: COMMERCIAL PERSONA Zoning:

School: MANTON CONSOLIDATED SCHOOLS

P.R.E. 100% / / MBT Com.

:

2024 Est TCV 0

Building Permit(s)	Date	Number	Status

Owner's Name/Address

VIASAT, INC
P O BOX 4747
OAK BROOK IL 60522

[ ] Improved [ ] Vacant

Land Value Estimates for Land Table .

Description	Frontage	Depth	* Factors * Front	Depth	Rate	%Adj.	Reason	Value
		0.00	Total Acres		Total Est. Land Value =			0

Public Improvements

- [ ] Dirt Road
- [ ] Gravel Road
- [ ] Paved Road
- [ ] Storm Sewer
- [ ] Sidewalk
- [ ] Water
- [ ] Sewer
- [ ] Electric
- [ ] Gas
- [ ] Curb
- [ ] Street Lights
- [ ] Standard Utilities
- [ ] Underground Utils.

Topography of Site

- [ ] Level
- [ ] Rolling
- [ ] Low
- [ ] High
- [ ] Landscaped
- [ ] Swamp
- [ ] Wooded
- [ ] Pond
- [ ] Waterfront
- [ ] Ravine
- [ ] Wetland
- [ ] Flood Plain

Who When What

Tax Description

Comments/Influences

Year		Personal Property	Assessed Value	Board of Review	Tribunal/ Other	Taxable Value
2024	0	0	0			0
2023	0	0	0			0
2022	0	0	0			0
2021	0	0	0			0

The Equalizer. Copyright (c) 1999 - 2009.
Licensed To: Township of Greenwood, County of Wexford, Michigan

*** Information herein deemed reliable but not guaranteed***

Bought During	Computer Equipment
2018	5,438*15%
2017	431* 8%
Prior	1,433* 8%
Total	7,302
TCV->	965

Pages 3 to 4. Other Personal Property	Claimed Value	Depr	Depr.Value
Section G. Other Assessable Personal Property	0	100	0
Section H. Assessable Tools	0	100	0
Section I. Qualified Personal Property	0	100	0
Section M. Leasehold Improvements	0	TBL	0
Section N. Buildings on Leased Land	0	TBL	0
Section O. Rental Information	0	100	0
13. Idle Equipment	0	TBL	0
14. Construction in Progress	0	50	0
15 & 16. Cable, Utility & Cellular Assets	0	TBL	0

Total Cost New= 7,302 TCV= 965 Assessed Value= 500

*** Information herein deemed reliable but not guaranteed***

Parcel Number: 2410ZPER2201 Jurisdiction: GREENWOOD TWP County: WEXFORD Printed on 02/15/2024

Grantor	Grantee	Sale Price	Sale Date	Inst. Type	Terms of Sale	Liber & Page	Verified By	Prcnt. Trans.

Property Address

Owner's Name/Address

DIRECTV LLC
C/O KROLL LLC
P O BOX 2789
ADDISON TX 75001

Tax Description

Comments/Influences

Class: COMMERCIAL PERSONA Zoning:

School: MANTON CONSOLIDATED SCHOOLS

P.R.E. 100% / / MBT Com.

:

2024 Est TCV 0

Building Permit(s)	Date	Number	Status

[ ] Improved [ ] Vacant

Land Value Estimates for Land Table .

Description	Frontage	Depth	* Factors * Front	Depth	Rate	%Adj.	Reason	Value
		0.00	Total Acres		Total Est. Land Value =			0

Public Improvements

[ ] Dirt Road
[ ] Gravel Road
[ ] Paved Road
[ ] Storm Sewer
[ ] Sidewalk
[ ] Water
[ ] Sewer
[ ] Electric
[ ] Gas
[ ] Curb
[ ] Street Lights
[ ] Standard Utilities
[ ] Underground Utils.

Topography of Site

[ ] Level
[ ] Rolling
[ ] Low
[ ] High
[ ] Landscaped
[ ] Swamp
[ ] Wooded
[ ] Pond
[ ] Waterfront
[ ] Ravine
[ ] Wetland
[ ] Flood Plain

Who When What

Year		Personal Property	Assessed Value	Board of Review	Tribunal/ Other	Taxable Value
2024	0	0	0			0
2023	0	0	0			0
2022	0	0	0			0
2021	0	0	0			0

The Equalizer. Copyright (c) 1999 - 2009.
Licensed To: Township of Greenwood, County of Wexford, Michigan

*** Information herein deemed reliable but not guaranteed***

Bought During 2021	Computer Equipment 1,279*32%
Prior Total	1,279
TCV->	409

Pages 3 to 4. Other Personal Property	Claimed Value	Depr	Depr.Value
Section G. Other Assessable Personal Property	0	100	0
Section H. Assessable Tools	0	100	0
Section I. Qualified Personal Property	0	100	0
Section M. Leasehold Improvements	0	TBL	0
Section N. Buildings on Leased Land	0	TBL	0
Section O. Rental Information	0	100	0
13. Idle Equipment	0	TBL	0
14. Construction in Progress	0	50	0
15 & 16. Cable, Utility & Cellular Assets	0	TBL	0

Total Cost New= 1,279 TCV= 409 Assessed Value= 200

*** Information herein deemed reliable but not guaranteed***

Parcel Number: 2410ZPER2202 Jurisdiction: GREENWOOD TWP County: WEXFORD Printed on 02/15/2024

Grantor	Grantee	Sale Price	Sale Date	Inst. Type	Terms of Sale	Liber & Page	Verified By	Prcnt. Trans.

Property Address	Class: INDUSTRIAL-PERSONA	Zoning:	Building Permit(s)	Date	Number	Status
6020 N 27 ROAD	School: MESICK CONSOLIDATED SCH DIST					
	P.R.E. 100% / / MBT Ind.					
Owner's Name/Address	:					
KAMPS INC 2900 PEACH RIDGE AVE NW GRAND RAPIDS MI 49534	2024 Est TCV 0					

Improved | Vacant

Land Value Estimates for Land Table .

Description	Frontage	Depth	* Factors * Front	Depth	Rate	%Adj.	Reason	Value
		0.00	Total Acres		Total Est. Land Value =			0

Public Improvements

- Dirt Road
- Gravel Road
- Paved Road
- Storm Sewer
- Sidewalk
- Water
- Sewer
- Electric
- Gas
- Curb
- Street Lights
- Standard Utilities
- Underground Utils.

Topography of Site

- Level
- Rolling
- Low
- High
- Landscaped
- Swamp
- Wooded
- Pond
- Waterfront
- Ravine
- Wetland
- Flood Plain

Tax Description

Comments/Influences

Who When What

Year		Personal Property	Assessed Value	Board of Review	Tribunal/ Other	Taxable Value
2024	0	0	0			0
2023	0	0	0			0
2022	0	0	0			0
2021	0	0	0			0

The Equalizer. Copyright (c) 1999 - 2009.
Licensed To: Township of Greenwood, County of Wexford, Michigan

*** Information herein deemed reliable but not guaranteed***